CITY OF LAKE WORTH
7 North Dixie Highway · Lake Worth, Florida 33460 · Phone: 561-586-1600· Fax: 561-586-1750

AGENDA
CITY OF LAKE WORTH
CITY COMMISSION MEETING
CITY HALL COMMISSION CHAMBER
TUESDAY, DECEMBER 02, 2014 - 6:00 PM

1. **ROLL CALL:**

2. **INVOCATION:** Preston Smith of American Atheists

3. **PLEDGE OF ALLEGIANCE:** Led by Vice Mayor Scott Maxwell

4. **AGENDA - Additions/Deletions/Reordering:**

5. **PRESENTATIONS:** (there is no public comment on Presentation items)

   A. Accept awards from the International Economic Development Council (IEDC) and City-County Communications & Marketing Association (3CMA)

   B. Accept Certificate of Achievement for Excellence in Financial Reporting by the Government Finance Officers Association of the United States and Canada

   C. Proclamation declaring December 1, 2014 as World AIDS Day

   D. Living Shoreline Improvements by Palm Beach County

   E. Firefighters Pension Trust Fund, Division 2 update

   F. Sunset Ridge Neighborhood Association update

6. **COMMISSION LIAISON REPORTS AND COMMENTS:**

7. **PUBLIC PARTICIPATION OF NON-AGENDAED ITEMS AND CONSENT AGENDA:**

8. **APPROVAL OF MINUTES:**

9. **CONSENT AGENDA:** (public comment allowed during Public Participation of Non-Agendaed items)

   A. Use of $23,415 in State Law Enforcement Forfeiture Funds to purchase a security system from Q-Star Technology

B. Ratify appointment of board members to the Electric Utility Advisory Board

C. Purchase Authorization for Badger water meters from Innovative Metering Solutions, Inc.

D. Task Order 1 with URS Corporation Southern for temporary engineering services

E. Variance agreement with Robert A. Lepa to allow brick pavers on a driveway and City right-of-way at 728 North Lakeside Drive

F. Variance agreement with Iran Guzman to allow brick pavers on a driveway and City right-of-way at 1752 22nd Avenue North

G. Authorize a piggyback of the Florida Sheriffs' Association contract for tires and related services

H. Interlocal Agreement with Palm Beach County to transfer ownership, maintenance, and control of Boutwell Road to the City

I. Temporary Construction Easement Agreement with Palm Beach County's Department of Environmental Resource Management for "Living Shoreline" improvements at Bryant Park

J. Terminate a contract with Employee Assistance Professionals of South Florida, Inc.

K. Purchase Order with Wright National Flood Insurance Company for flood insurance coverage for Fiscal Year 2014-2015

L. Purchase Order with Plastridge Agency-PBGO for special events liability insurance coverage for Fiscal Year 2014-2015

10. <u>PUBLIC HEARINGS:</u>

11. <u>UNFINISHED BUSINESS:</u>

12. <u>NEW BUSINESS:</u>

A. Ordinance No. 2015-01 - First Reading - designate a Residential Planned Development (RPD) located at 2430 Lake Worth Road and schedule the public hearing date for January 6, 2015

B. Authorize payment for election costs of August 26, 2014 election

13. <u>LAKE WORTH ELECTRIC UTILITY:</u>

A. <u>PRESENTATION:</u> (there is no public comment on Presentation items)

1) Update on the electric utility system

B. CONSENT AGENDA: (public comment allowed during Public Participation of Non-Agendaed items)

C. PUBLIC HEARING:

D. NEW BUSINESS:

1) Purchase various distribution transformers from Wesco Distribution, Gresco Utility Supply, and HD Supply for Fiscal Year 2015

2) Florida Municipal Electric Association Membership Dues for October 2014 thru September 2015

3) Agreement with MR Valuation Consulting, LLC for Fair Market Value Appraisal of Electric Utility System

4) Agreement with Willdan Financial Services, Inc. for Economic and Financial Valuation of Electric Utility System

14. CITY ATTORNEY'S REPORT:

15. CITY MANAGER'S REPORT:

A. January 6, 2015 Draft Commission Agenda

16. ADJOURNMENT:

If a person decides to appeal any decision made by the board, agency or commission with respect to any matter considered at such meeting or hearing, he or she will need a record of the proceedings, and that, for such purpose, he or she may need to ensure that a verbatim record of the proceedings is made, which record includes the testimony and evidence upon which the appeal is to be based. (F.S. 286.0105)

NOTE:ONE OR MORE MEMBERS OF ANY BOARD, AUTHORITY OR COMMISSION MAY ATTEND AND SPEAK AT ANY MEETING OF ANOTHER CITY BOARD, AUTHORITY OR COMMISSION.

PROCLAMATION

WHEREAS, over 35 million people are currently living with HIV/AIDS world-wide and over 25 million people have already died of AIDS, and each year more than 2.7 million new infections occur; and

WHEREAS, the global spread of HIV infection and AIDS necessitates a worldwide effort to increase communication, education and action to stop the spread of HIV/AIDS; and

WHEREAS, the United Nations Program on HIV/AIDS observes December 1 of each year as "World AIDS Day," a day to commemorate those who have passed on, celebrate victories such as increased access to treatment and prevention services, and to reinvigorate the worldwide effort to stop the spread of HIV/AIDS; and

WHEREAS, in the United States, over 1 million people are infected with HIV and every 11 minutes a new infection occurs resulting in more than 50,000 new annual infections; and

WHEREAS, the Palm Beach County HIV Community Prevention Partnership and the Palm Beach County HIV CARE Council, through its partners are working together to renew HIV/AIDS awareness and to expand and strengthen the local effort to stop the spread of HIV/AIDS in Palm Beach County on World AIDS Day.

NOW, THEREFORE, I, Pam Triolo, Mayor of the City of Lake Worth, Florida, by virtue of the authority vested in me, do hereby proclaim:

DECEMBER 1, 2014
As
World AIDS Day

and urge all residents of the City of Lake Worth to take part in activities and observances designed to increase awareness and understanding of HIV/AIDS as a global challenge and to join the global effort to prevent further spread of HIV/AIDS.

IN WITNESS WHEREOF, I have hereunto set my hand and caused the Seal of the City of Lake Worth, Florida, to be affixed this 2nd day of December, 2014.

_____

Pam Triolo, Mayor

ATTEST:

_____

Pamela Lopez, City Clerk

The Living Shoreline

A Collaboration Between Michael Singer Studio and the Palm Beach County Department of Environmental Resources Management

09.19.14

Michael Singer Studio

And Engineer of Record:

BRIDGE DESIGN ASSOCIATES, INC.
CONSULTING ENGINEERS

Funded in Part by the
National Endowment for the Arts

ART WORKS.
arts.gov

Project Credits

This project has been funded with generous support from
Palm Beach County and The National Endowment for the Arts, Art Works Program.

Artist and Designer: Michael Singer
Michael Singer Studio Project Team: Jason Bregman, Jonathan Fogelson and Jake Amrhein
Palm Beach County Department of Environmental Resources, Project Team: Daniel Bates, Julie Bishop, Carman Vare, Eric Anderson, Clint Thomas, P.E., Michael Evans P.E., Ianquer Acevedo
Bridge Design Associates Inc.: Brian Rheault, P.E., Chris LaForte, P.E.
Fabrication: Architectural Precast and Foam
Additional Consulting: Chris Bergh from the Nature Conservancy
NEA Program Coordinator: Meg Brennan, Visual Arts Specialist

Future Use

While *Living Shoreline* is considered an original work of art by Michael Singer Studio, this project is intended to advance a critical dialogue between art, ecology, and infrastructure in our built environment. Rather than attempting to patent such designs, this model is shared as an 'open source' concept with the hope that future projects will advance on this design; improving water quality, aquatic habitat and creating new vital forms of infrastructure that seek to address sea-level rise while working to regenerate our marine ecosystems. We do ask the proper credit is given to Michael Singer Studio for any use or presentation of drawings or concepts in this booklet.

Michael Singer Studio

Michael Singer Inc.
Studio South
Delray Beach, Florida
561-865-7683

Studio North
802-464-2165

www.michaelsinger.com
info@michaelsinger.com

The Living Shoreline

A Collaboration Between Michael Singer Studio and the Palm Beach County Department of Environmental Resources Management

Table of Contents

PAGE 3	BACKGROUND
PAGES 4-5	THE LIVING SHORELINE OVERVIEW
PAGE 6	THE SCULPTURAL ELEMENT
PAGES 7-8	ELEVATIONS
PAGE 9	IN-SITU RENDERINGS
PAGE 10	A LIVING PROTOTYPE - MONITORING AND EVALUATION
PAGES 11-17	SCHEMATIC DESIGN DRAWINGS A01 THROUGH A07
PAGES 18-19	CONCEPT STUDIES

Background

Michael Singer Studio began collaborating with Palm Beach County Department of Environmental Resources Management (ERM) in 2005 during the design of the downtown West Palm Beach Waterfront Commons. The Studio was interested in creating new estuarine habitat that would help improve water quality in the Lake Worth Lagoon (the body of water that the Intracoastal Waterway runs through in Palm Beach County) while offering the general public and tourists a unique way of interacting with the water and native habitats within an urban environment. ERM provided helpful consultation on the Michael Singer Studio design for the *Living Dock* (see right). The Studio and ERM also collaborated on the design of transitional waterfront edges and the creation of new habitat islands which became known as the *South Cove* (see below and right). ERM ultimately engineered, permitted, funded, and built the *South Cove*, which was completed in 2012.

Nearly 90% of the Lake Worth Lagoon has an artificial shoreline composed of either vertical bulkheads that provide no shoreline protection or habitat value, or rip-rap (stacking rocks) that provide some protection and habitat value, but still lacks the function of a natural, living shoreline. Native mangrove and cordgrass salt-marsh vegetation act as shoreline and sediment stabilizers, and increase ecosystem services to the community by improving habitat for commercially and ecologically important fish and other wildlife.

During the West Palm Beach collaboration Michael Singer Studio and ERM began discussions on creating sculpted living shorelines instead of utilizing the standard limestone rip-rap (which was used for the *South Cove* and many other ERM projects). The concept was to create functional sculptural elements that would retain soils for mangroves while also performing other ecological functions such as fostering oysters and creating passages and shelter for fish. The goal was to find a way to not only create a more environmentally functional and aesthetically beautiful design, but also create a design that could compete economically with the standard rip-rap alternative. The discussions ultimately led to a joint application to the National Endowment for the Arts (NEA) grants program, Art Works, to fund the design and creation of a Sculptural *Living Shoreline* prototype for a small demonstration study. The NEA agreed to fund the project in 2013 with matching support from ERM. In the summer of 2014 Palm Beach County increased its support for the project to fund the creation of a full 100 linear foot *Living Shoreline* mangrove planter comprised of 11 Sculptural Elements. The site for this innovative *Living Shoreline* Mangrove Planter is at the northern end Bryant Park in Lake Worth, Florida, adjacent to *Snook Islands Natural Area* created by ERM in 2005 and expanded in 2012-2014.

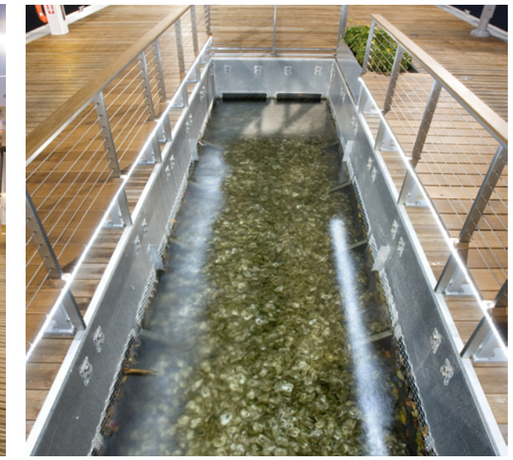

The Living Dock

The West Palm Beach Waterfront Commons Project includes three new docks that allow for recreational boat and commercial water-taxi dockage to encourage visitors to the downtown. The large central *Living Dock* incorporates shaded seating areas and functions as a public event space. This innovative dock was designed with intertidal planters containing native mangroves, spartina grasses and a visible oyster reef set into the dock. Perhaps the first of its kind in the nation, the boat dock and promenade actually functions as a living system, filtering water and providing small pockets of habitat within an estuarine man-made structure. The three new docks were carefully designed to align with the annual West Palm Beach Boat Show layout in order to establish permanent circulation spines for the event. This consideration reduces the cost and environmental impact of establishing temporary docks for the Boat Show and other on-water events. The docks, the first completed project area of the larger West Palm Beach Waterfront Project, won a Marine Industries Award in 2009 and has been covered in international journals.

South Cove

As a part of the overall design of the West Palm Beach Waterfront Commons, Michael Singer Studio focused on regenerative environmental opportunities along the waterfront, specifically in the southern portion of the project area known as the *South Cove*. In 2005 the Studio proposed a series of interventions that would act as a catalyst for regenerating the estuarine ecosystem within the *South Cove*. The Studio investigated environmental restoration projects along the Lake Worth Lagoon that were created as a part of the Lake Worth Lagoon Initiative and met with ERM and other agencies to explore the most beneficial environmental strategies. Working with this research the Studio designed a series of stepped intertidal gardens along the seawall, tidal islands of mangroves and spartina, and oyster reefs for water filtration, habitat enhancement and critically, to promote the growth of beneficial seagrasses. The original design included a floating dock "water trail" with limited access to the tidal islands.

In 2007 ERM recognized the value of the conceptual work initiated by Michael Singer Studio and adopted the *South Cove* project as one of their own major projects as a part of the Lake Worth Lagoon Initiative. Utilizing 150,000 cubic yards of local fill material the project filled a series of anoxic dredge holes (essentially in-water habitat dead zones) and created three intertidal islands (above and left). The project area encompasses 2 acres of mangrove and spartina habitat, 3.5 acres of potential seagrass habitat and 0.9 acres of rock revetment/oyster reef. These habitats provide natural water filtration (for instance, a single oyster filters up to 50 gallons of water a day) and improve water quality through stabilization of the sediments. ERM also constructed a 556 foot long elevated boardwalk, a 16 foot by 16 foot observation deck, and an educational kiosk for public access to the *South Cove*.

The Living Shoreline Overview

Living Shoreline is comprised of 11 Sculptural Elements that are designed to retain soils to support the growth of mangroves and emergent grasses, create shelter and passage for fish, and establish oyster reef habitat within the Lake Worth Lagoon. The form and composition of the Sculptural Elements was designed and sculpted by Michael Singer and his Studio working with ecologists, biologists, and engineers at ERM to shape regenerative habitat through art. This concept is a truly innovative approach to public art in which the artwork is created as an armature to support the restoration and enhancement of critical estuarine habitat. The *Living Shoreline* will ultimately assist in improving water quality, it will protect the adjacent bulkhead seawall, public park, and infrastructure, it will support the restoration of habitat, and critically, it will do this in a manner that engages the broader public to witness the regenerative transformation of a barren seawall to support shallow water estuarine habitat through a piece of public art. The *Living Shoreline* is along the seawall at the northern end Bryant Park in Lake Worth, Florida, just south of the Lake Worth Bridge and adjacent to the Snook Islands Natural Area.

The Sculptural Elements evolved through a collaborative design process between Michael Singer Studio, Palm Beach County ERM, and ERM's consulting Engineer of Record, Bridge Design Associates Inc. The Elements are comprised of reinforced pre-cast concrete, formed and cast locally in West Palm Beach. The reinforcing includes fiberglass rebar and secondary micro fiber reinforcing; no steel or metal is utilized in order to maximize durability. The Sculptural Elements are designed to rest on top of a rock mattress which is placed on the sandy grade below the water. At the site adjacent to Bryant Park, the sandy bottom is shallow but may be slightly raised to create an even bathymetric condition. The rock mattresses were designed to help evenly distribute the weight of the Sculptural Elements, provide a level surface for the installation, and allow for proper alignment. Once the Sculptural Elements and any associated geo-textile fabric are placed, the mangrove planter area will be backfilled with sand, and planted with mangroves and cordgrass. Over time the mangroves will flourish and the Sculptural Elements will become less visible from the adjacent shoreline, but still quite visible from the north, south and by waterside vessels. The raw concrete surface of the Sculptural Elements is intended to patina over time, reflecting the tides as well as supporting the growth of oysters and a variety of aquatic life.

Above, a plan drawing of the *Living Shoreline* project area. The site shown is adjacent to the seawall along Bryant Park, just south of the Lake Worth Bridge. 11 Sculptural Elements will be installed at this location as shown, running approximately 90' along the seawall. Rock revetments will be placed along the seawall north and south of the *Living Shoreline* mangrove planter.

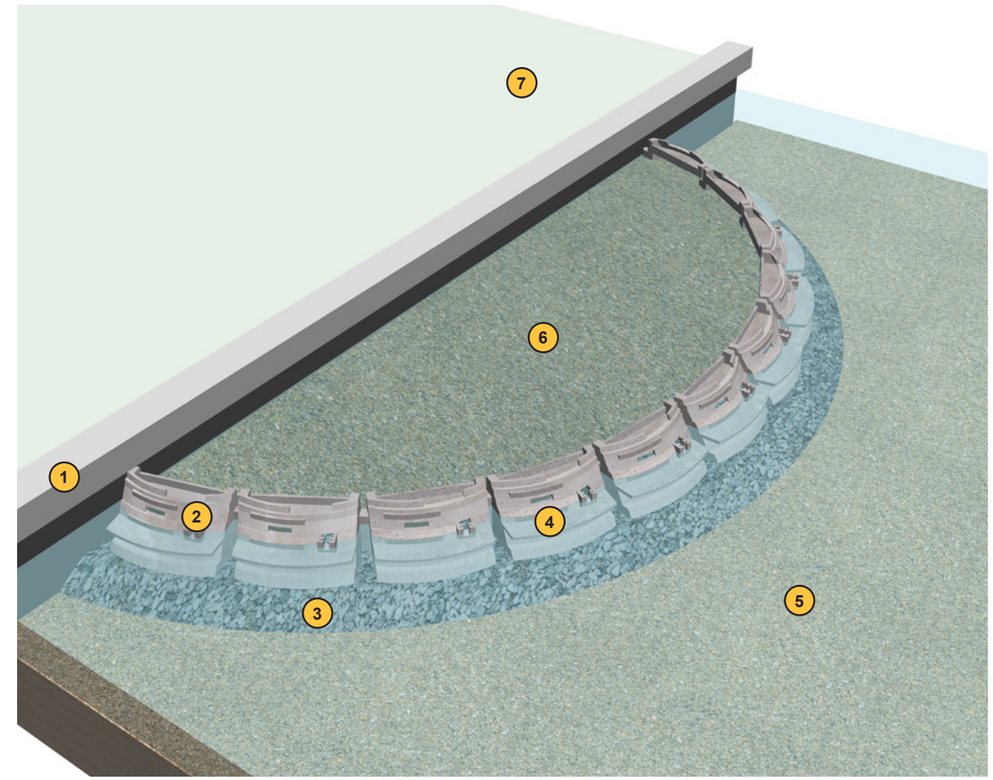

Layout of the Living Shoreline Mangrove Planter

Shown without plants for clarity.

1. Existing bulkhead seawall along the east edge of Bryant Park
2. The southernmost "end unit" of the 11 Sculptural Elements varies slightly from the other 10 Elements, lacking a female connector. See schematic drawing page 17 (A07) for additional information.
3. Rock mattress, comprised of geo-textile fabric and stone.
4. 1 of 10 of the typical Sculptural Elements; the 11th Element is an 'end unit' (see note 2 above)
5. Existing sandy grade within the Lake Worth Lagoon
6. Mangrove planter area to be filled to 6" below mean water level with sand and suitable soils and planted with red mangroves (*Rhizophora mangle)* and cordgrass (*Spartina*)
7. Upland area, Bryant Park

The Living Shoreline

Project Highlights and Benefits

- **Flexibility and Maximizing Habitat Creation**: The Sculptural Elements are designed to rotate in plan to form an arc, in order to maximize the total area of planted mangroves and cordgrass, which in-turn maximizes the habitat area. The arc size may vary, allowing for the creation of large or small mangrove planters depending on the number of Elements utilized (illustrated on the right side of this page).

- **Material and Energy Efficiency**: The Sculptural Elements retain soils for the mangrove planter with less material, less on-site installation time, and potentially less embodied energy than the standard limestone rip-rap alternative.

- **Optimizing Oyster Habitat**: Oyster habitat is optimized with an integrated "oyster shelf" built into the Sculptural Elements, set at the preferred elevation to foster growth. The shelf also functions as a ledge for sheltering fish such as Snook that prefer shaded locations.

- **Experimental Textures for Fostering Oysters**: Sculpted patterns/ textures will be tested on the oyster shelf to see if certain types of textures are optimal for oyster formation.

- **Experimental Fish Passage to Improve Habitat Access**: The Sculptural Elements integrate an adjustable fish passage that will be studied and improved upon over time, with the goal to allow for the free movement of aquatic life in and out of the mangrove planter. The existing rock rip-rap design typically does not allow for fish passage.

- **Engaging the Public Through Art**: *Living Shoreline* creates an aesthetically considered edge that engages the public as a work of art, with the possibility of creating 'local' variations for different communities and sites.

- **Integrated Planter to Soften the Edge**: The integrated top planter will help to visually break-up and soften the Sculptural Elements with native coastal flowering plants when they are first installed, prior to the growth of the mangroves and emergent grasses.

- **Wave Attenuating Design**: The Sculptural Elements are battered (angled back) to resist wave action while absorbing and dissipating some of the energy and reducing wave action compared to a vertical seawall, which will improve seagrass recruitment waterward of the structure.

- **Improving Upland Defenses and Anticipating Sea-level Rise Impacts**: The *Living Shoreline* creates two additional lines of defense against storm surge and flooding. The Sculptural Elements (which act as a retaining wall) and the red mangroves both absorb wave energy and protect upland areas. This should increase the lifespan of the adjacent seawall and also help mitigate some initial impacts of sea-level rise.

- **Economically Competitive**: When built in mass quantities, the Sculptural Elements should be cost competitive with the standard rip-rap alternative.

Design Flexibility / Adaptability

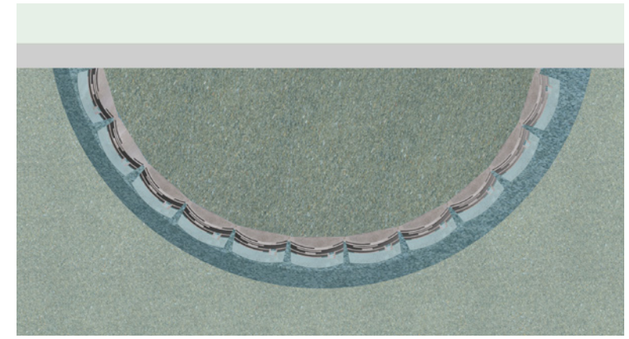

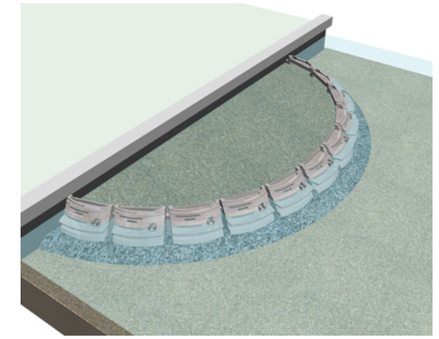

Above, the plan for a 90' diameter mangrove planter, made of 11 Sculptural Elements. The total mangrove planter area is approximately 2000 square feet in this configuration. A perspective of this plan is shown above right. This 11 unit configuration is planned for Bryant Park, as described on the previous page.

Approximate scale 1"=30'. Shown without plants for clarity.

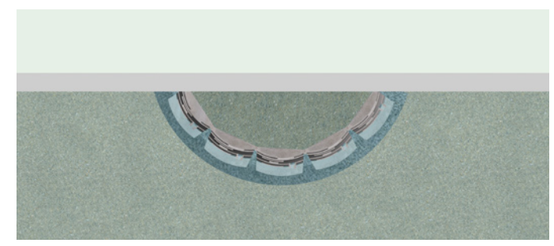

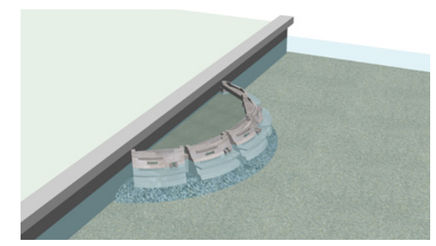

Above, a plan for a 40' diameter mangrove planter, made of 5 Sculptural Elements. The total mangrove planter area is approximately 415 square feet in this configuration. Notice the gaps between oyster shelves increases when the Elements are rotated to a greater degree. A perspective of this plan is shown above right.

Approximate scale 1"=30'. Shown without plants for clarity.

Left, a typical ERM mangrove planter along the seawall at the West Palm Beach Waterfront *South Cove* Project. Typical ERM mangrove planters utilize rip-rap (stacked rocks) and geotextile fabric to retain the sand for mangroves and emergent grasses. Sculptural Elements for the *Living Shoreline* will be utilized instead of rip-rap.

The Sculptural Element

1 The Fish Passage

The fish passage is an experimental design feature intended to study whether the Sculptural Elements can help support the free passage of aquatic life in and out of the mangrove planters. In similar shoreline mangrove planters created with limestone rip-rap, aquatic life cannot usually find its way into the planters. The fish passage was placed just above the mangrove soil level to prevent wash-out, but at a level intended to allow fish and other marine life to leave as the tide falls. With a passage integrated into each of the Sculptural Elements, there will be a total of 11 passages. The passages have also been created with a slot to allow for adjustability with an insert the size of a small concrete paver. This adjustability has been provided to allow ERM to raise the height of the passage should soil wash-out become an issue or to block off the passage (above high tide) if the passage is found to be ineffective.

2 The Integrated Planter

The integrated top planter will help to visually break-up and soften the Sculptural Elements when they are first installed, prior to the growth of the mangroves and cordgrass. The intent is to add color, growth and life to the Elements by planting native coastal flowering plants so that the structure appears less monolithic when first installed. As the mangroves grow, this aesthetic concern will become less of an issue. Native vegetation being considered for this planter include Sea Purslane (*Sesuvium portulacastrum*), Railroad Vine (*Ipomoea pes-caprae*) and Sea Oxeye Daisy (*Borrichia frutescens*), and other possible native, salt and drought tolerant species such as Golden Creeper (*Ernodea angusta*). The planter will have weep holes, but will have no irrigation and thus will be subject to periods of drought. It is uncertain if these plants or others will be able to tolerate this raised planter condition, so in many ways this is an experiment. If the selected plants fail to thrive there will be no harm in retaining the soil that remains and seeing what 'volunteer' plants take root.

3 Overall Form and Size

The overall size of the Sculptural Elements was determined by the site's bathymetric conditions, the desired height to resist storm surge, and the total weight of the elements which is a result of the total volume of concrete. The Element's height is fixed at 5.5', 3' below and 2.5' above mean water level. The total volume, and thus the dimensions, was determined by limiting the weight to 10 tons per Element, which is due to the crane capacity to lift (with straps) and place the elements a maximum of 25' from the edge of the seawall. The "C" shaped structural form in plan is for stability and structural efficiency, creating a form that retains soil and resists wave action while minimizing the total volume of material utilized in fabrication (the back-side being hollow).

4 Sculpted Face

The Sculptural Elements are curved and battered (angled back) for both aesthetic and functional purposes. The curvature of both the individual Sculptural Elements and the full *Living Shoreline* is an important aesthetic consideration for the edge to feel somewhat organic and less engineered. Functionally, the curved and battered face of the Sculptural Elements helps to resist wave action while absorbing and dissipating some of the energy and reducing wave action compared to a vertical seawall.

5 Oyster Shelf and Textured Areas

Michael Singer's sculptural works often integrate hand-crafted patterned textures and this project offered a unique opportunity to test these textures as a substrate for fostering oysters. Oyster spat readily present in the Lake Worth Lagoon will attach to oyster shell, rocks and concrete to form new oyster colonies. This experimental sculptural detail will test whether certain types of textures perform better to foster this natural growth. As mentioned previously, the oyster shelf is set at the optimal level 6" below mean water level in order to maximize the growth and health of oyster populations on the Sculptural Elements. The shelf may also function as shelter for certain types of fish that prefer shaded overhangs.

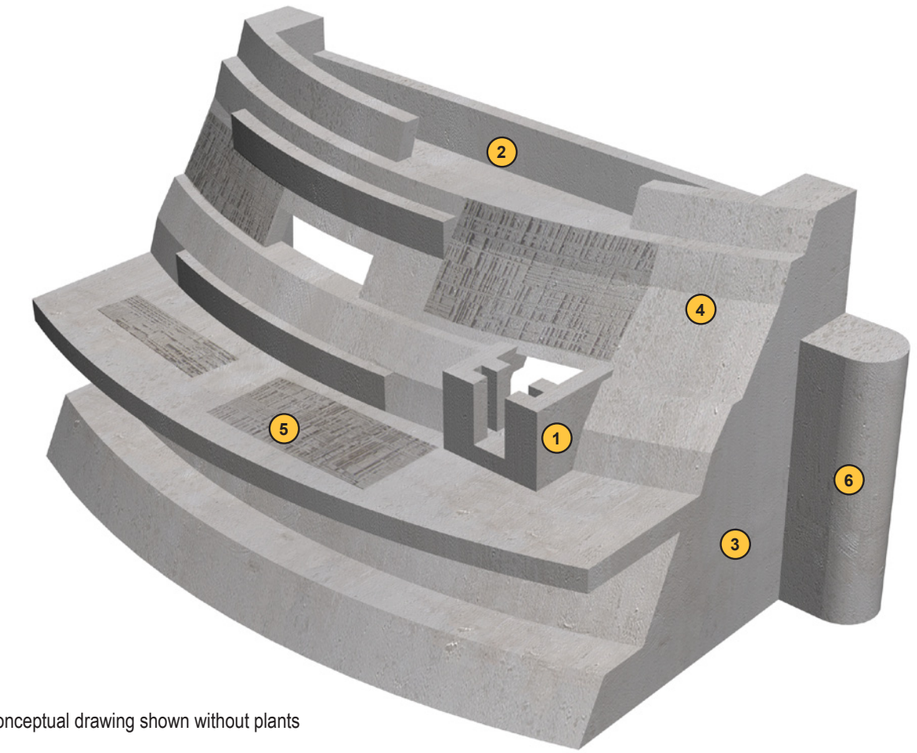

Conceptual drawing shown without plants

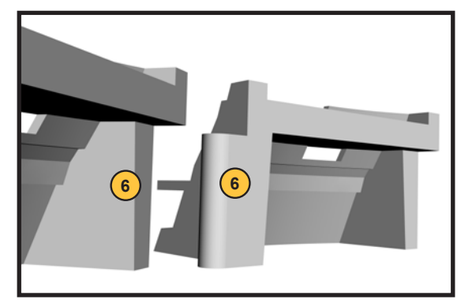

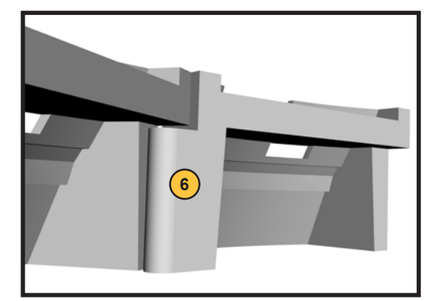

6 Interlocking Joints

The Sculptural Elements join in a manner that allows for the continuous *Living Shoreline* wall to retain the soils for the mangrove planter. A series of possible joints were studied during the development of the Sculptural Elements. Ultimately a simple lap joint was selected by the project team allowing the male joint on the north side of the Element to fit under and into the female joint on the south side of the Element. The lap creates some additional stability but the majority of contact in the joint is a butt joint that allows the Elements to rotate in plan relative to one another and thus form an arc shaped retaining wall. In this design a single "end unit" variant is required for the southernmost Sculptural Element in which the female notch is omitted and a solid wall is provided in that one location (see drawing A07 for additional information).

The Living Shoreline Perspectival Elevations

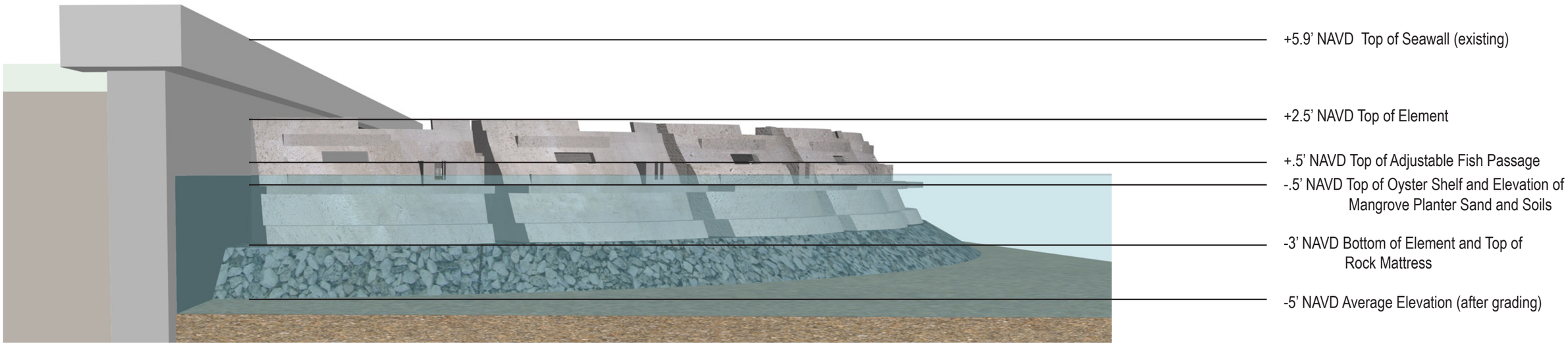

Living Shoreline in-situ perspective elevation looking north. Conceptual drawing shown without plants. Approximate scale 1/4"=1'.

Living Shoreline in-situ elevation looking west. Conceptual drawing shown without plants. Approximate scale 1/8"=1'.

The Living Shoreline Sculptural Elements and Critical Elevations

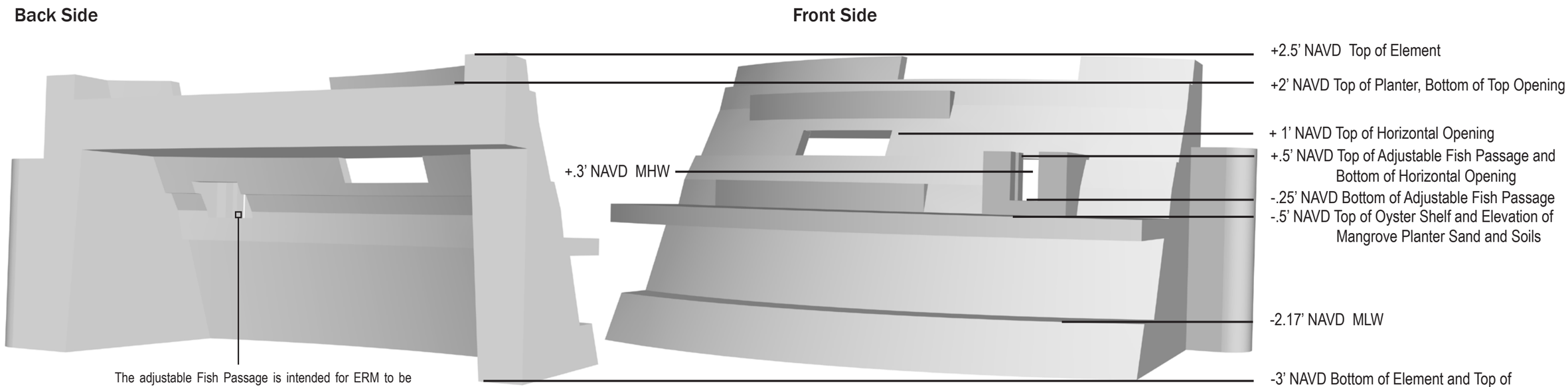

The adjustable Fish Passage is intended for ERM to be able to adjust the passage from -.25 NAVD to +.5 NAVD to test the balance between fish passage and sediment loss. A small concrete paver or heavy-weight plastic insert may be utilized to adjust this opening, as necessary.

Calibrating Elevations

Each aspect of the prototype Sculptural Element was carefully considered including the elevations shown on this page. The oyster shelf, for example, was designed to be at the optimal height for fostering oyster growth. The fish passage was placed just above the mangrove sand level to prevent wash-out, but also to reduce the likelihood of trapping aquatic life as much as possible (two critical priorities that must be balanced). The height of the Elements was established to resist storm surge in the event of hurricane or major climatic event. While long-term sea-level rise will impact these elevations, by that time the mangroves should be established enough to no longer require the Sculptural Elements for support. Furthermore, certain aspects of the design anticipate some amount of sea-level rise – for instance the oysters build upwards and thus may be higher over time.

The Living Shoreline

In-Situ Renderings

The *Living Shoreline* is comprised of 11 Sculptural Elements that are designed to retain soils to support the growth of mangroves and emergent grasses, create shelter and passage for fish, and establish oyster reef habitat within the Lake Worth Lagoon. This concept is a truly innovative approach to public art in which the artwork is created as an armature to support the restoration and enhancement of critical estuarine habitat. The *Living Shoreline* will ultimately assist in improving water quality, it will protect the adjacent bulkhead seawall, public park, and infrastructure, and it will support the restoration of habitat. Critically, it will do this in a manner that engages the broader public to witness the regenerative transformation of a barren seawall to support shallow water estuarine habitat through a piece of public art.

The renderings shown to the left depict the *Living Shoreline* when it is first installed and planted (top) and after several years of growth and some hedging (bottom). The amount of hedging that will occur for the mangroves will depend on ERM's long-term plan for this planter and any agreements with the City of Lake Worth and the Florida Department of Environmental Protection. Oysters are depicted on the oyster shelves in the lower rendering, illustrating their growth overtime on the Elements.

A Living Prototype

In addition to being a functional work of art, the *Living Shoreline* is a prototype design intended for long-term study and analysis by ERM and other interested parties. It is anticipated that the *Living Shoreline* will be the first of many similar projects that will be created for a number of sites and conditions.

Specific issues to be studied include:

- The durability of the Sculptural Elements over time including the joints between the Elements.
- How the fish passage works or how it could be improved in a future design to maximize the movement of aquatic life in and out of the mangrove and cordgrass habitat. Do oysters or other fouling organisms recruit, grow, and ultimately clog the passage? Does aquatic life get trapped at low-tide more than typical mangrove planters? Should future projects integrate or omit a similar fish passage?
- How the integrated planters fare in a major storm and what native vegetation is most lasting and tolerant of the planter condition. Is drought and/or inundation a major factor in plant survival? Should future projects integrate or omit a similar planter?
- Do certain textures / patterns/ surfaces encourage and sustain the growth of oysters better than others?
- Could the Sculptural Elements be designed to be relocated and reused at a new site once the mangroves are fully established?
- Are certain forms of aquatic life utilizing the *Living Shoreline* in unexpected ways?
- Is the mangrove planter area retained by the Sculptural Elements notably more or less productive than those created with limestone rip-rap?
- What aspects of the *Living Shoreline* and/or the Sculptural Elements can be improved for the next installation? Could certain design features add more habitat value, reduce cost, reduce installation time, and/or improve the overall cost benefit analysis?

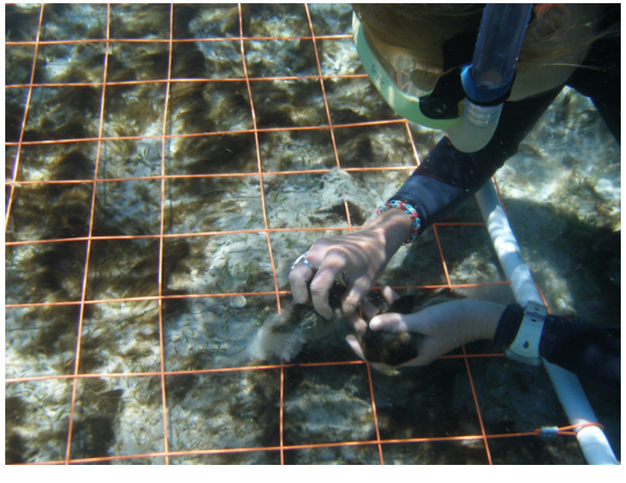

Monitoring and Evaluation

ERM will monitor and evaluate the *Living Shoreline* quarterly the first year and annually thereafter for the success of the mangrove and emergent grasses, oyster recruitment, and seagrass waterward of the structure.

- **Emergent Vegetation**: The extent of emergent vegetation, including planted and recruited species will be monitored. Panoramic photos will be taken from designated locations. To obtain quantitative data, a transect will be established through the center of the planter. A 1-meter quadrat will be placed at two locations along the transect to document percent cover and survival rate of species, overall health, and relative size distribution. Presence of exotic vegetation will also be noted and removed during each monitoring event.
- **Oysters/ Hardbottom**: The extent of oysters monitored, and panoramic photos will be taken from designated locations. To obtain quantitative data, a 0.25-meter quadrat will be randomly thrown along the ledges at approximately 10-foot intervals. Within each quadrat, the percent cover of oysters and other shellfish species will be noted. Relative size distribution will also be noted.
- **Seagrass**: During growing season (April-October), the extent of seagrass will be mapped using transects spaced at approximately 25 feet intervals. Biologists will snorkel/dive the length of each transect, noting the presence or absence of seagrass and any other resources. Seagrass beds will be noted as patchy or continuous, with a continuous bed defined between two seagrass observations.

Drawing Set
Design Drawings for Coordination

Project
NEA-PBCERM Living Shoreline

OVERALL PERSPECTIVE VIEWS

26-Jun-14

Sheet **A01**

DESIGN DRAWINGS FOR DISCUSSION AND COORDINATION PURPOSES ONLY NOT FOR FABRICATION WITHOUT STOP DRAWING PROCESS AND APPROVAL

All Dimensions in inches

Michael Singer Studio

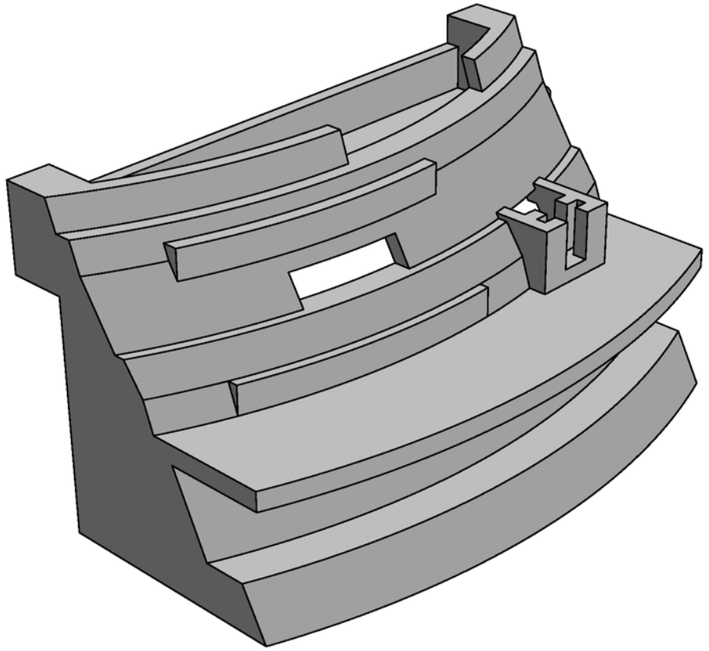

FRONT-LEFT-TOP VIEW
Not to Scale

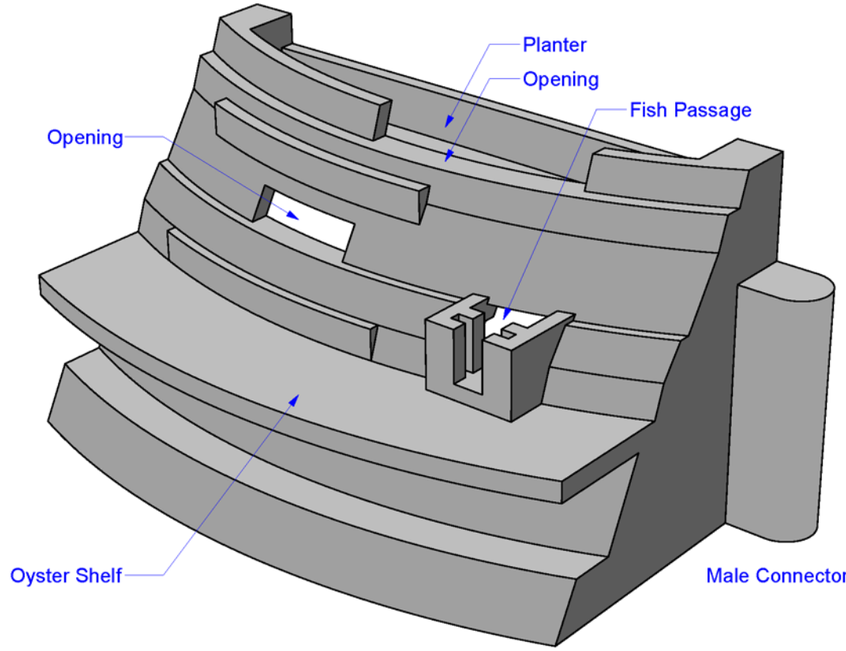

FRONT-RIGHT-TOP VIEW
Not to Scale

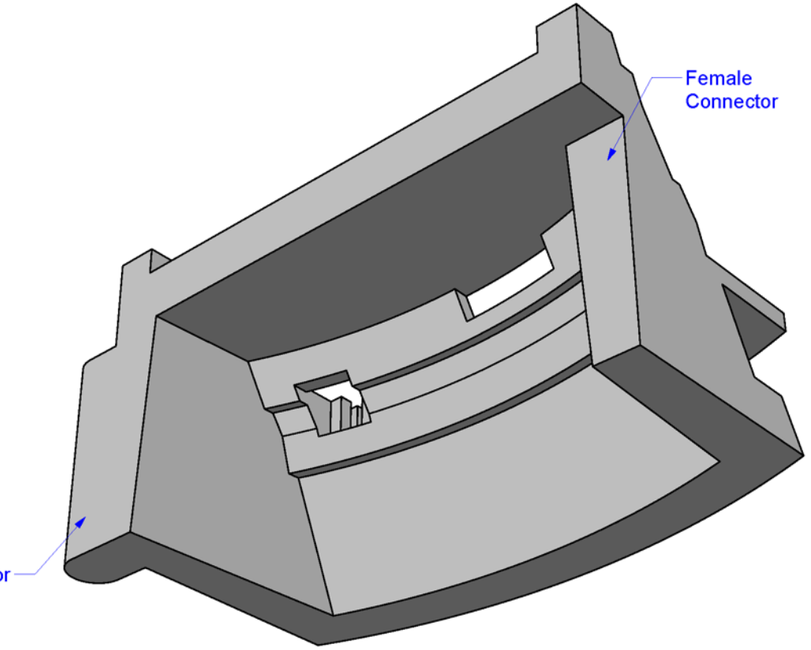

REAR-LEFT-BOTTOM VIEW
Not to Scale

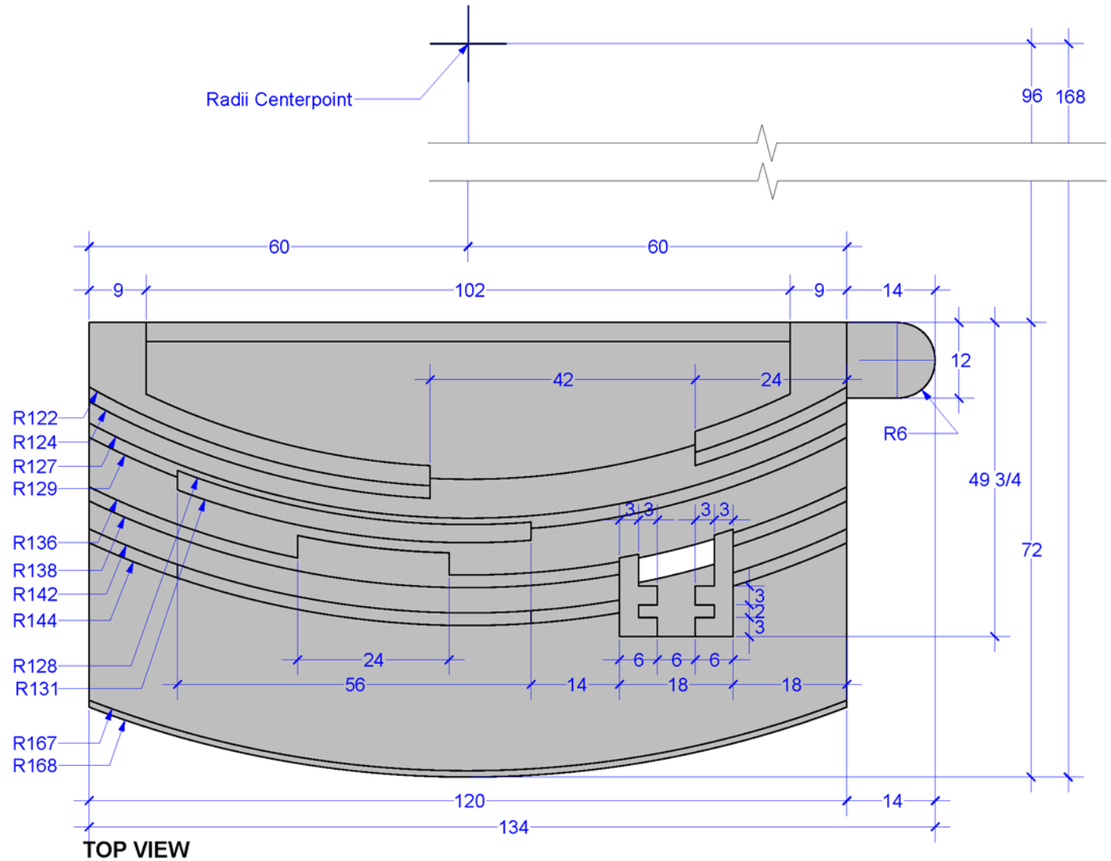

TOP VIEW
Scale: 1" = 2'

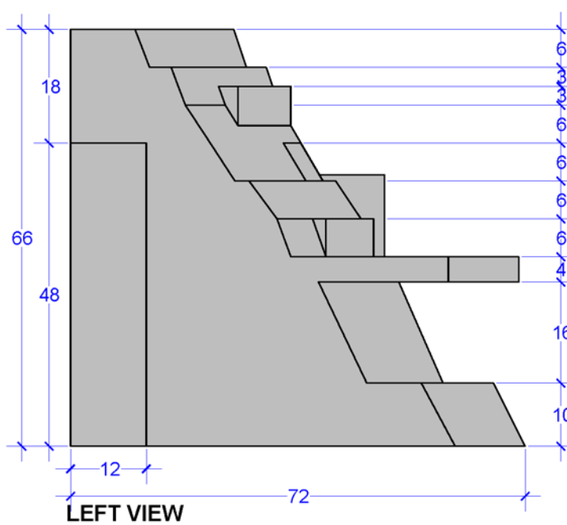

LEFT VIEW
Scale: 1" = 2'

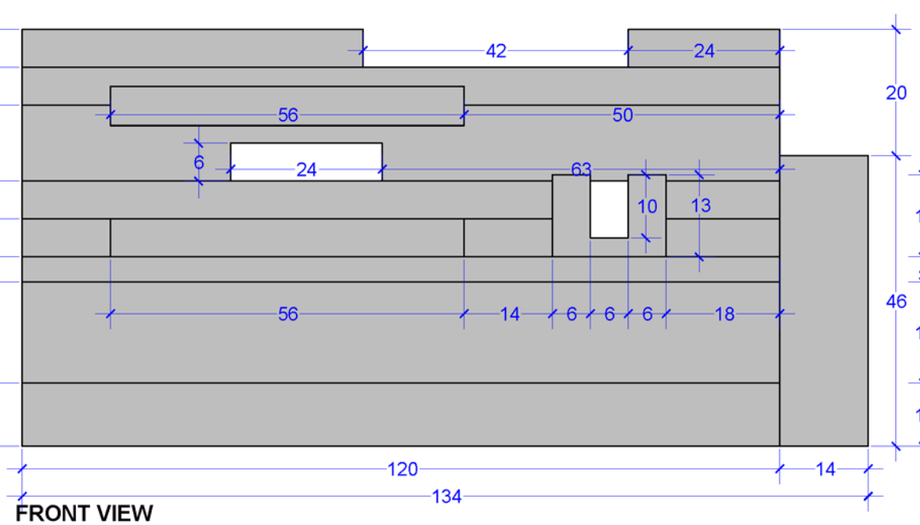

FRONT VIEW
Scale: 1" = 2'

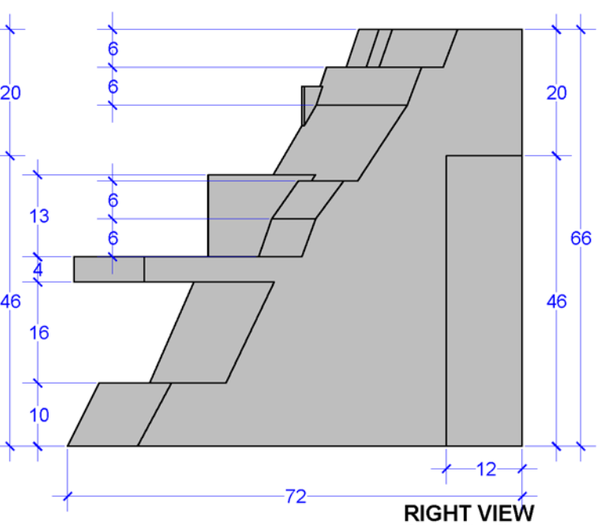

RIGHT VIEW
Scale: 1" = 2'

Drawing Set
Design Drawings for Coordination

Project
NEA-PBCERM Living Shoreline

TOP VIEW & ELEVATIONS

26-Jun-14

Sheet **A02**

DESIGN DRAWINGS FOR DISCUSSION AND COORDINATION PURPOSES ONLY NOT FOR FABRICATION WITHOUT FINAL DRAWING PROCESS AND APPROVAL

All Dimensions in inches

Michael Singer Studio

REAR VIEW
Scale: 1" = 2'

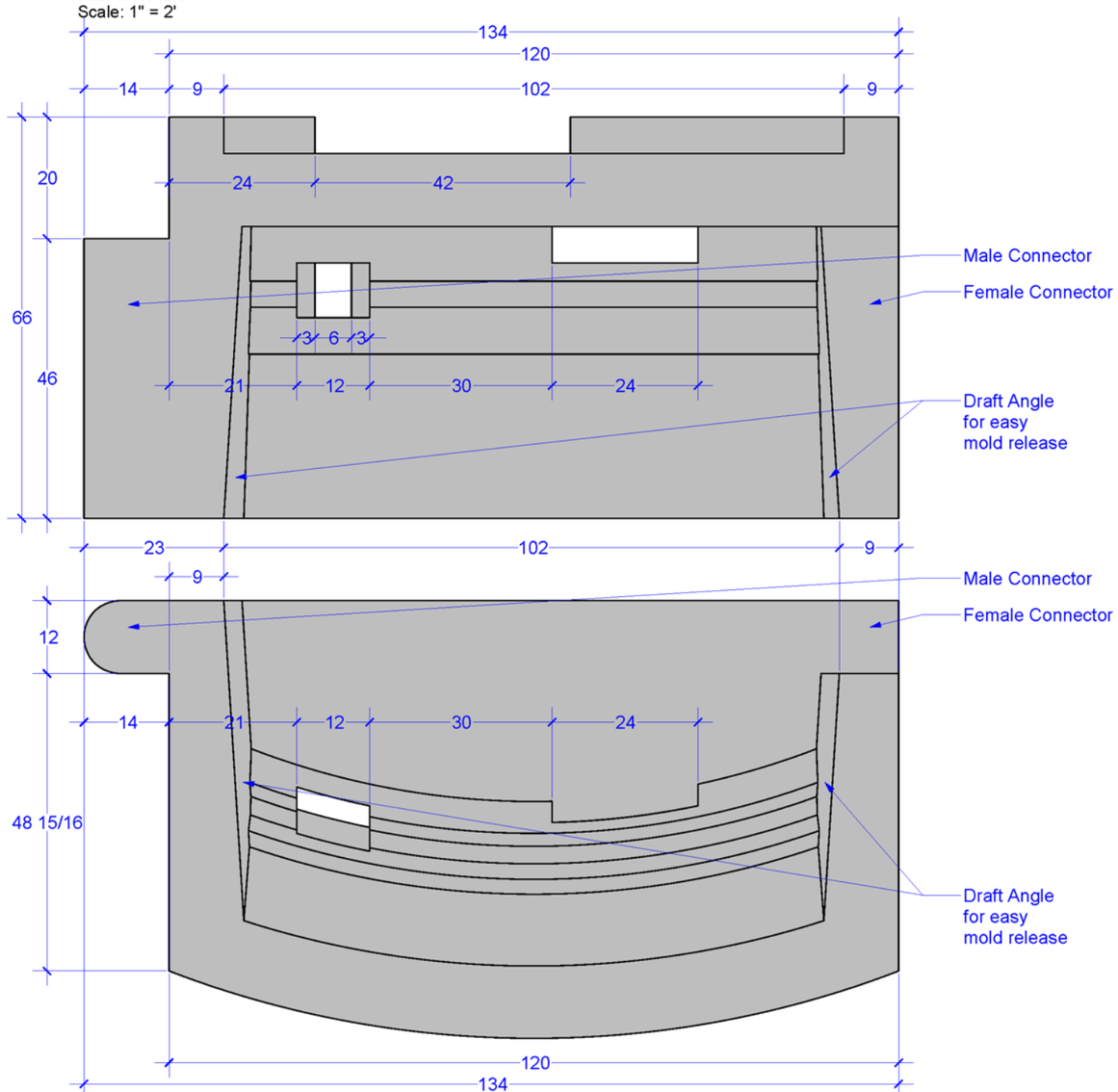

BOTTOM VIEW
Scale: 1" = 2'

TOP VIEW for Section Reference
Scale: 1" = 2'

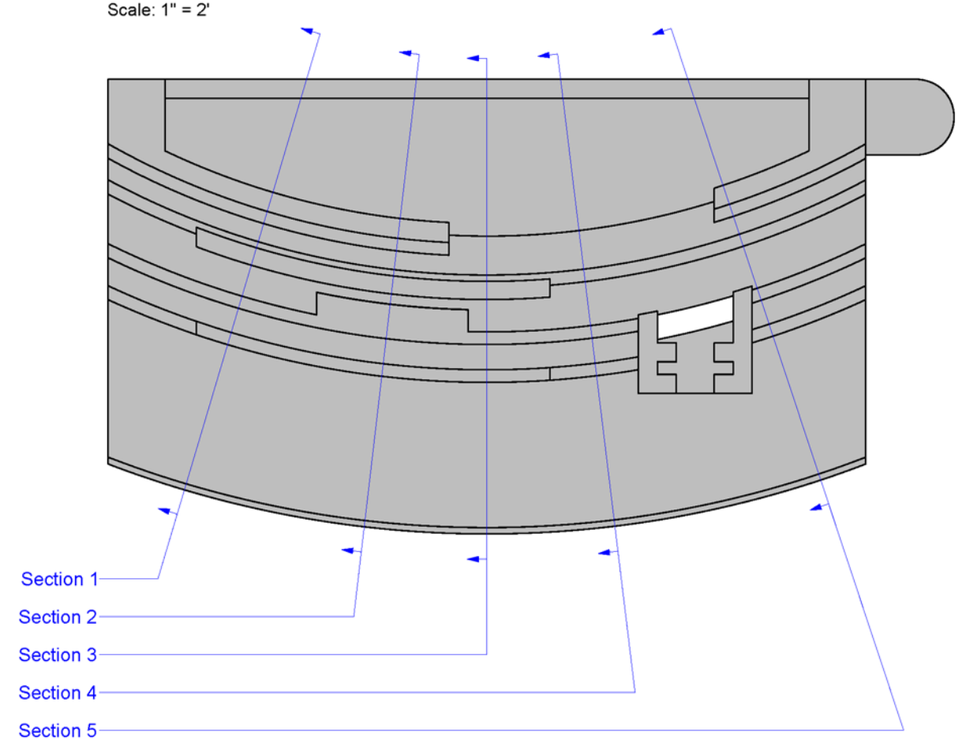

Drawing Set
Design Drawings for Coordination

Project
NEA-PBCERM Living Shoreline

REAR & BOTTOM VIEWS & SECTIONS KEY

Sheet
A03

26-Jun-14

DESIGN DRAWINGS FOR DISCUSSION AND COORDINATION PURPOSES ONLY NOT FOR FABRICATION WITHOUT STOP DRAWING PROCESS AND APPROVAL

All Dimensions in inches

Michael Singer Studio

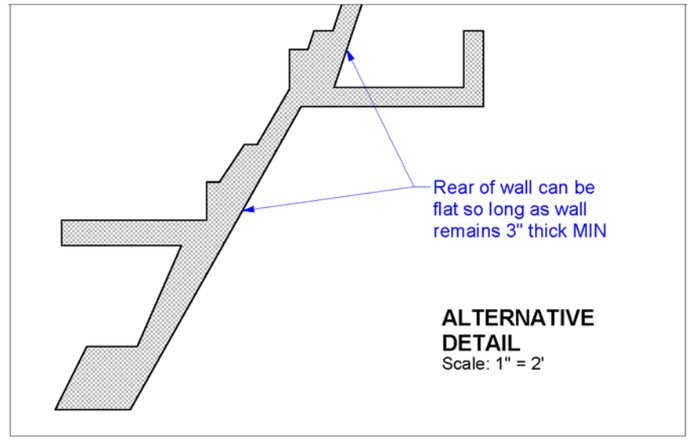

ALTERNATIVE DETAIL
Scale: 1" = 2'

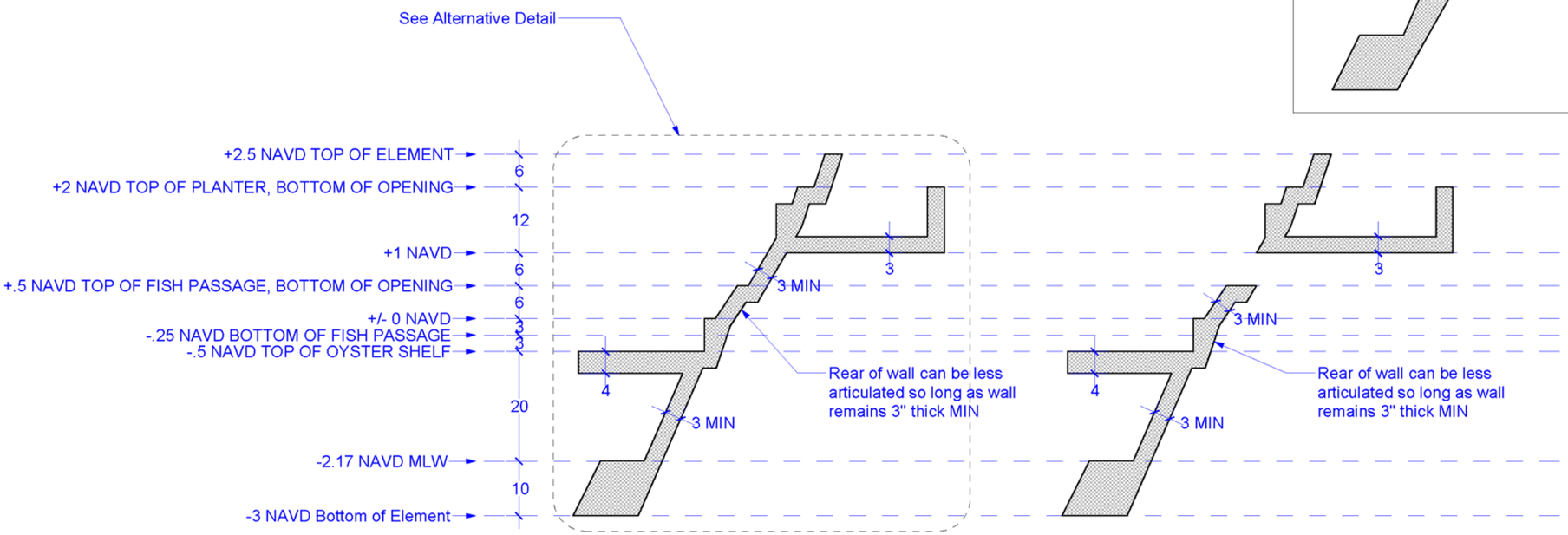

SECTION 1
Scale: 1" = 2'

SECTION 2
Scale: 1" = 2'

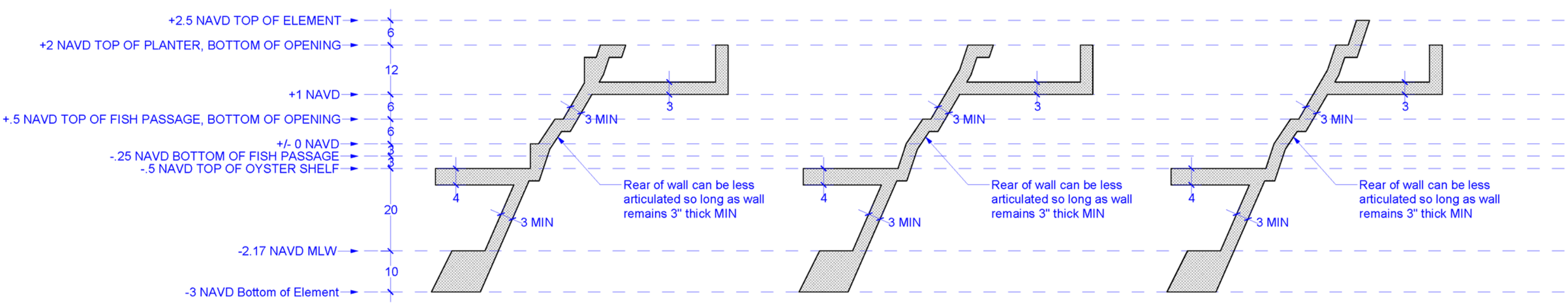

SECTION 3
Scale: 1" = 2'

SECTION 4
Scale: 1" = 2'

SECTION 5
Scale: 1" = 2'

Drawing Set
Design Drawings for Coordination

Project
NEA-PBCERM Living Shoreline

SECTIONS

Sheet
A04

26-Jun-14

DESIGN DRAWINGS FOR DISCUSSION AND COORDINATION PURPOSES ONLY NOT FOR FABRICATION WITHOUT STOP DRAWING PROCESS AND APPROVAL

All Dimensions in inches

Michael Singer Studio

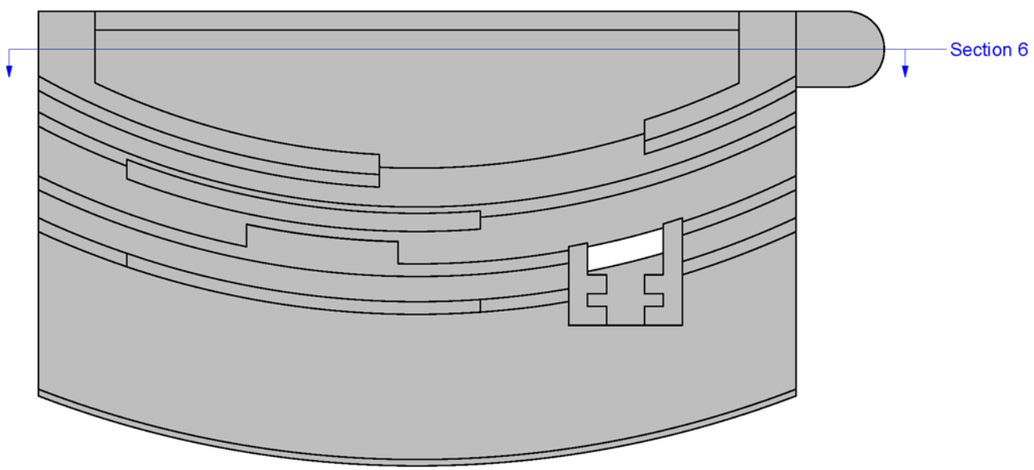

TOP VIEW for Section Reference
Scale: 1" = 2'

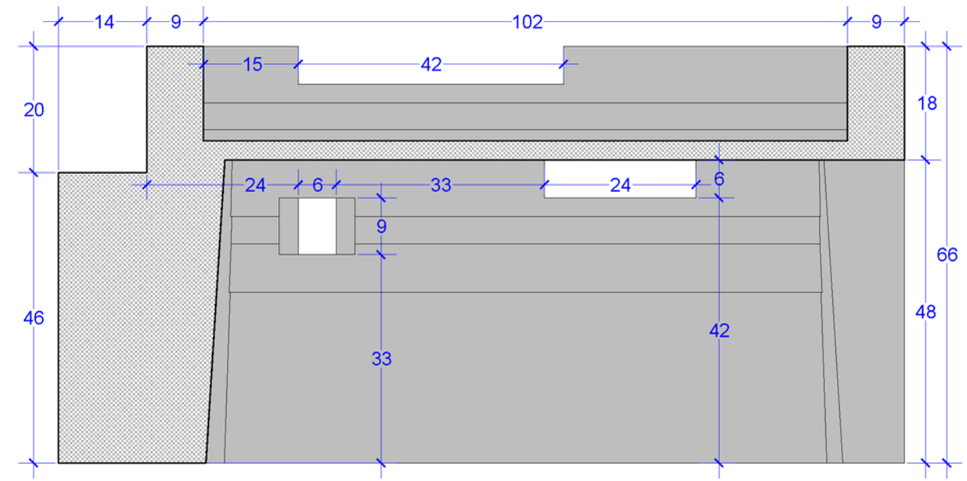

SECTION 6
Scale: 1" = 2'

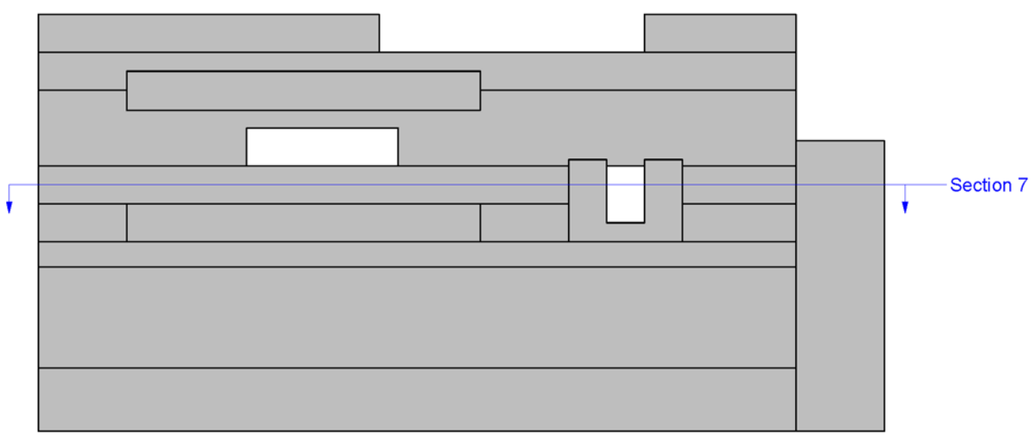

FRONT VIEW for Section Reference
Scale: 1" = 2'

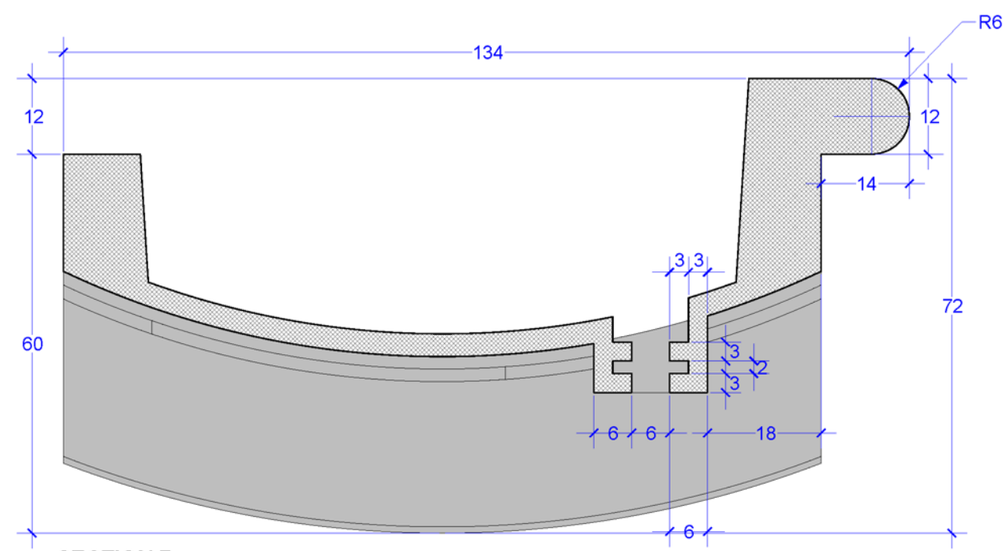

SECTION 7
Scale: 1" = 2'

Drawing Set
Design Drawings for Coordination

Project
NEA-PBCERM Living Shoreline

ADDITIONAL SECTIONS

26-Jun-14

Sheet **A05**

DESIGN DRAWINGS FOR DISCUSSION AND COORDINATION PURPOSES ONLY NOT FOR FABRICATION WITHOUT STOP DRAWING PROCESS AND APPROVAL

All Dimensions in inches

Michael Singer Studio

TOP VIEW For Texture Locations
Scale: 1" = 2'

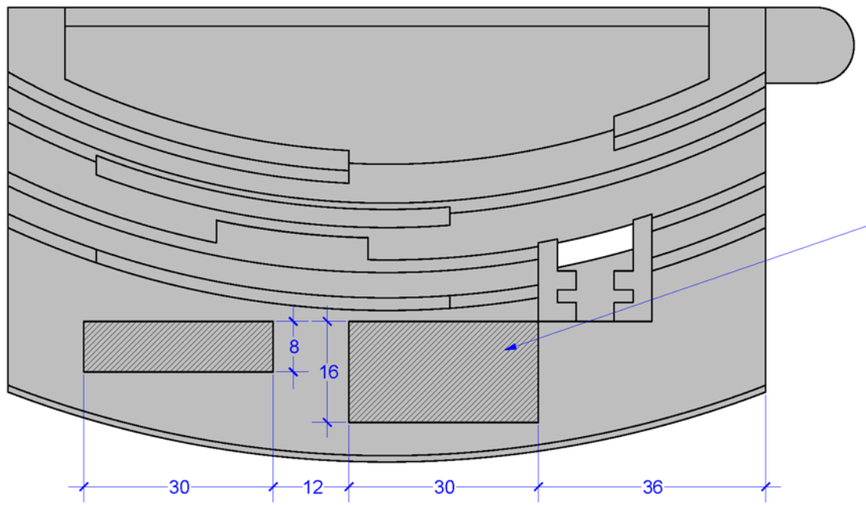

Hatched areas on this sheet are TEXTURED AREAS. TEXTURED AREAS will be created by using rubber inserts made by Michael Singer Inc. Rubber inserts will be ½" MAX thickness. Therefore, concrete will be up to ½" less in thickness at TEXTURED AREAS.

NOTE: For clarity, TEXTURED AREAS at the front wall are not shown in the top view

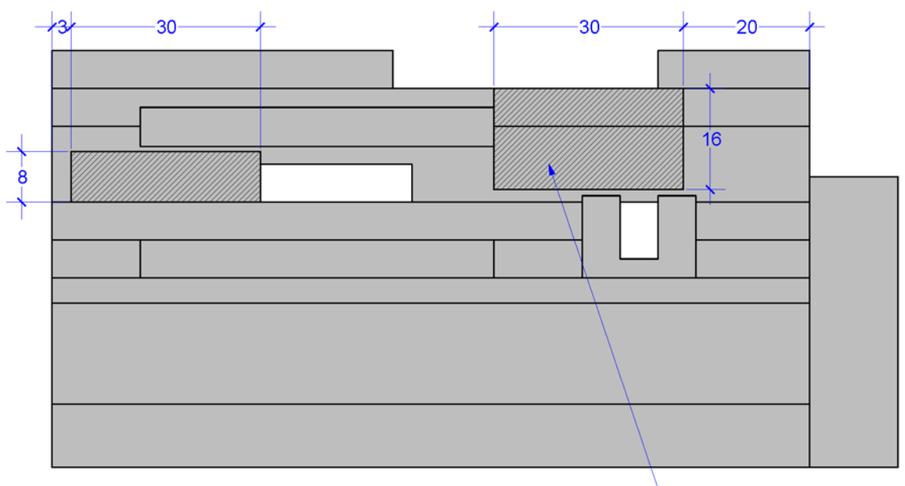

FRONT VIEW For Texture Locations
Scale: 1" = 2'

As rubber inserts are rectangular, their placement at the compound front wall will not be precisely as shown. Maintain location and orientation as close as possible to this drawing.

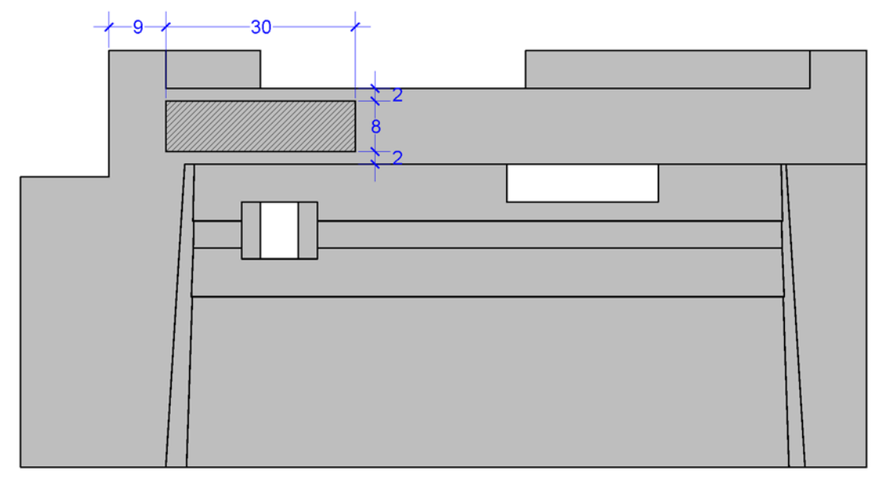

REAR VIEW For Texture Locations
Scale: 1" = 2'

Drawing Set
Design Drawings for Coordination

Project
NEA-PBCERM Living Shoreline

TEXTURE LOCATIONS

Sheet **A06**

26-Jun-14

DESIGN DRAWINGS FOR DISCUSSION AND COORDINATION PURPOSES ONLY NOT FOR FABRICATION LAYOUT OR DRAWING PROCESS AND APPROVAL

All Dimensions in inches

Michael Singer Studio

REAR VIEW
Scale: 1" = 2'

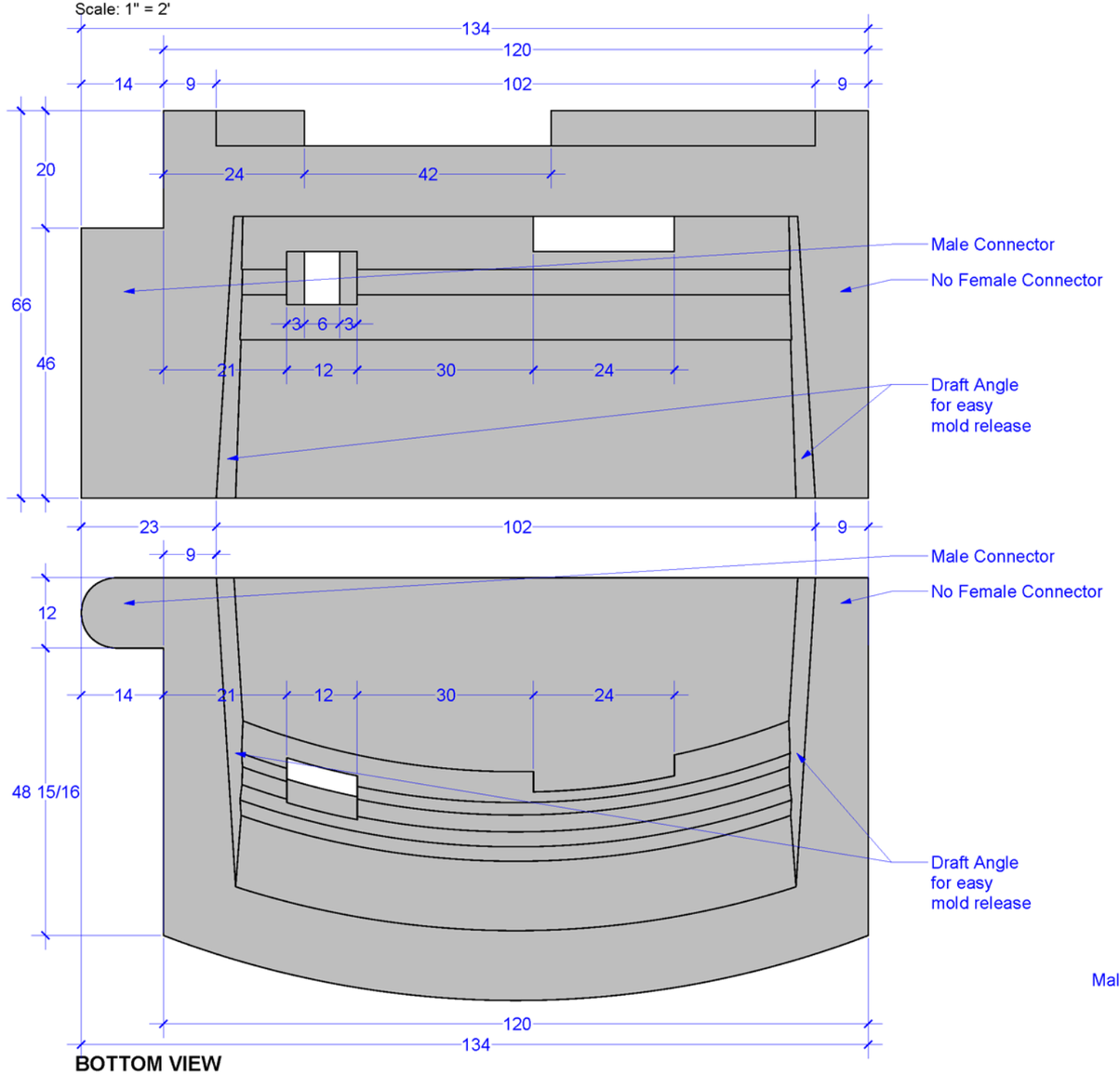

BOTTOM VIEW
Scale: 1" = 2'

This END UNIT applies only to 1 of the 11 units planned for fabrication. The END UNIT is intended as the southern-most unit of the mangrove planter adjacent to the existing seawall. Except for the lack of a FEMALE CONNECTOR this END UNIT is identical to all other 10 units.

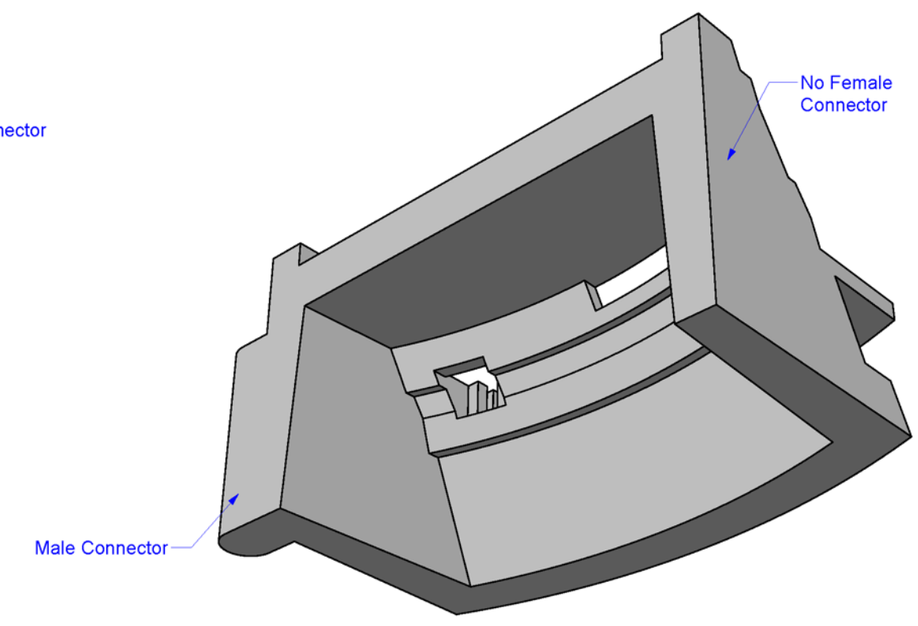

REAR-LEFT-BOTTOM VIEW
Not to Scale

Drawing Set
Design Drawings for Coordination

Sheet
A07

Project
NEA-PBCERM Living Shoreline

END UNIT without Female Connector

26-Jun-14

DESIGN DRAWINGS FOR DISCUSSION AND COORDINATION PURPOSES ONLY NOT FOR FABRICATION WITHOUT DRAWING PROCESS AND APPROVAL

All Dimensions in inches

Michael Singer Studio

The Living Shoreline Concept Studies

Process Concepts

The Sculptural Elements shown on this page and the following page are earlier versions and configurations developed by Michael Singer Studio during the conceptual design process. Each concept was evaluated by the entire project team for advantages, disadvantages, potential fabrication, transport, and/or installation complexity, habitat value, engineering feasibility and aesthetic value. The concept ultimately selected for fabrication evolved from these designs and was further developed by the Studio as a schematic design for pricing by fabricators. Final engineering and reinforcing was developed by Bridge Design Associates Inc.

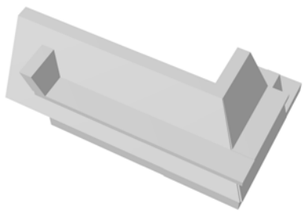

Angled Wall Element

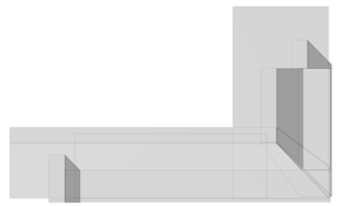

Angled Wall Element - Plan

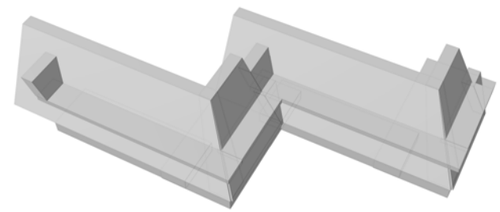

Angled Wall Element Pair

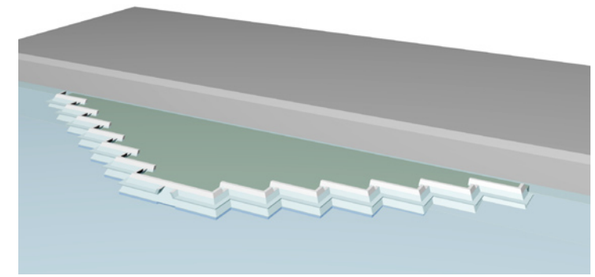

Conceptual Layout with Angled Wall Elements

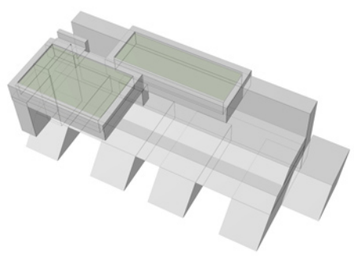

Linear Element

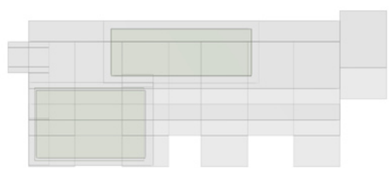

Linear Element - Plan

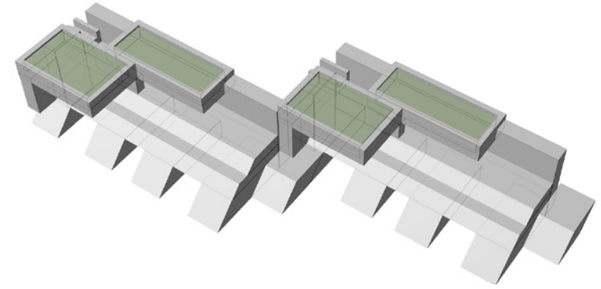

Linear Element Pair

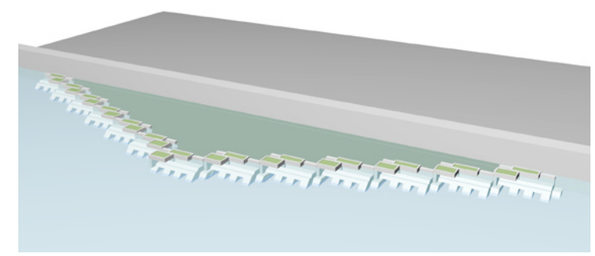

Conceptual Layout with Linear Elements

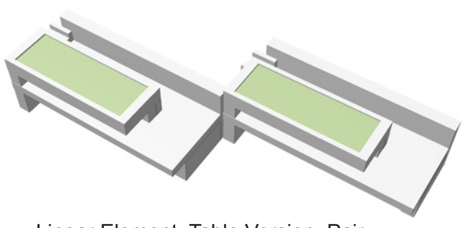

Linear Element, Table Version, Pair

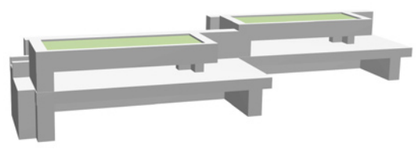

Linear Element, Table Version, Pair

The Angled Wall Concept was a preferred concept due to its simplicity, but required at least 3 Element forms to create a *Living Shoreline* (a left side, right side, and end unit type Element). The Linear Element was thought to be too heavy and complex and likely too costly. All of these concepts also relied on a staggered plan layout (above right) which is less efficient than an Element type that could form arc (see next page). Aspects of each of these designs helped to inform the final Sculptural Element selected for the *Living Shoreline*.

The Living Shoreline Concept Studies

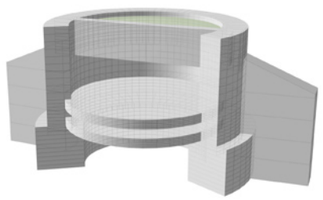

Cylinder Element

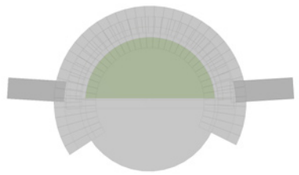

Cylinder Element - Plan

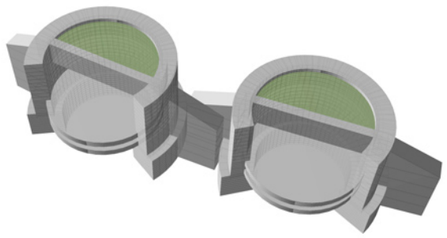

Cylinder Element Pair

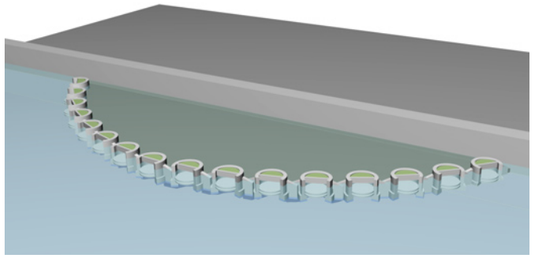

Conceptual Layout with Cylinder Elements

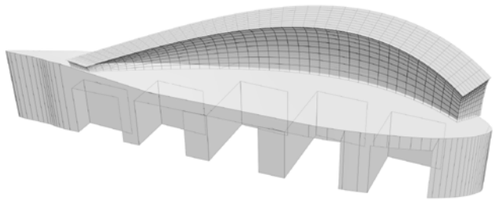

Shell Element

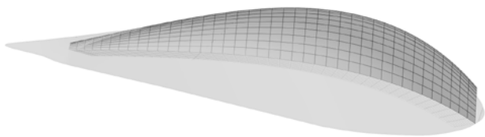

Shell Element - Plan

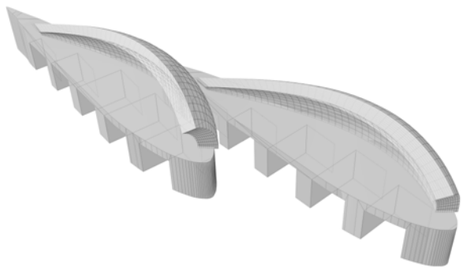

Shell Element Pair

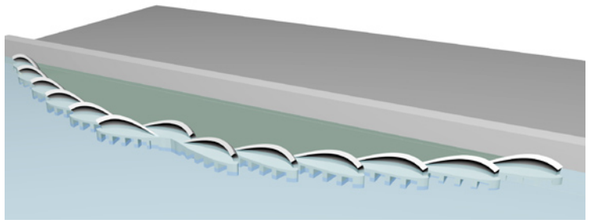

Conceptual Layout with Shell Elements

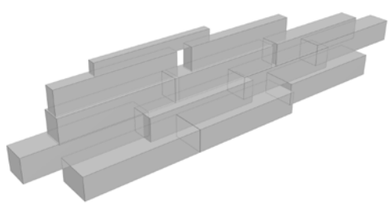

Ledge Element

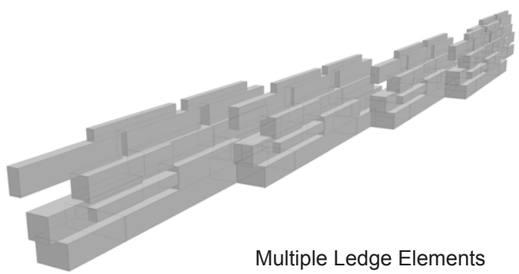

Multiple Ledge Elements

The Cylinder Concept had one main advantage over the others- it could utilize a single Element type repeated to form an arc shaped mangrove planter (top right). This aspect of the Cylinder Concept was integrated with aspects of the Angled Wall and Linear Concepts (previous page) to develop the Sculptural Element shown on page 6 and in the Schematic Drawings (pages 11-17). The Shell Concept shown above was considered to be too difficult to transport and install and likely more costly to fabricate than the other process concepts. The Ledge Element was a quick study to better understand how to optimize oyster habitat. ERM ultimately advised that a single shelf at the optimum water level would be better than multiple smaller shelves at varying levels.

CITY OF LAKE WORTH

7 North Dixie Highway · Lake Worth, Florida 33460 · Phone: 561-586-1600· Fax: 561-586-1750

AGENDA DATE: December 2, 2014, Regular Meeting **DEPARTMENT:** City Clerk

---

EXECUTIVE BRIEF

TITLE:
Firefighters Pension Trust Fund - Division 2 update

SUMMARY:

Captain James Nevad, Board Chair, will update the Commission on activities that have taken place since the last update.

BACKGROUND AND JUSTIFICATION:
The Board members shall implement the provisions of Florida State Statutes, Chapter 175. The members serve three-year terms. The last update provided by the Firefighter's Pension Trust Fund- Division 2 was on November 5, 2013.

MOTION:
Not applicable

ATTACHMENT(S):
Fiscal Impact Analysis – not applicable

CITY OF LAKE WORTH

7 North Dixie Highway · Lake Worth, Florida 33460 · Phone: 561-586-1600· Fax: 561-586-1750

AGENDA DATE: December 2, 2014, Regular Meeting **DEPARTMENT:** City Clerk

---

EXECUTIVE BRIEF

TITLE:
Update provided by the Sunset Ridge Neighborhood Association

SUMMARY:
Mr. Ryan Oblander, Sunset Ridge President, will advise the Commission on activities in the neighborhoods since the last update.

BACKGROUND AND JUSTIFICATION:
At the City Commission meeting on July 20, 2010, the City Commission requested that all neighborhood associations provide an update. The last update from the Sunset Ridge Neighborhood Association was on December 3, 2013.

MOTION:
Not applicable

ATTACHMENT(S):
Fiscal Impact Analysis – not applicable

CITY OF LAKE WORTH

7 North Dixie Highway · Lake Worth, Florida 33460 · Phone: 561-586-1600· Fax: 561-586-1750

AGENDA DATE: December 2, 2014, Regular Meeting **DEPARTMENT:** Leisure Services

---

EXECUTIVE BRIEF

TITLE:
Use of $23,415 in State Law Enforcement Forfeiture Funds to purchase FlashCam security system

SUMMARY:
Authorize the use of $23,415 in State Law Enforcement Forfeiture Funds to purchase FlashCam security system.

BACKGROUND AND JUSTIFICATION:
The FlashCAM is a proactive solution to stop nuisance crimes. For over 18 years, Q-Star Technology has been helping cities across the country address issues of nuisance crimes with the FlashCAM portable crime deterrent systems. The FlashCAM is a crime fighting tool designed specifically to protect cities from nuisance crimes such as graffiti, vandalism, illegal dumping, metal/equipment theft and other unwanted activities. These types of crimes destroy property, increase liability risks and deplete precious resources and budgets. The longer these issues are not addressed, the bigger the problem becomes.

Since the FlashCAM is a deterrent system rather than surveillance, the security efforts are proactive instead of reactive to the crime. The unique features (i.e: motion-triggered strobe flash and customizable voice warning) stop the criminals before they can strike. The system also captures high resolution (12+ megapixel) images of the activity, suspects and license plates, even in complete darkness (approx. 250 ft.). The clarity of the captured images allows law enforcement to identify and prosecute these criminals with this key evidence.

There are no infrastructure requirements and no expensive installation costs involved. The FlashCAM is completely self contained. There is no hard wiring required with the solar-charged battery. This simplifies installations and system movement. Many FlashCAM users partner with other departments within their city to rotate their systems to various locations such as: parks, schools, power substations, recycling facilities, bridges/highways, water reservoirs, historical monuments etc. The portability and ease of installation of the FlashCAM, as well as the versatility on a range of applications, allow cities to develop a comprehensive program to combat nuisance crimes within their community in even the most remote locations.

The FlashCam is a portable solution for nuisance crimes. Once specific issues have been addressed, the system can be moved to other ‘hot spots' replacing it with a Decoy system. Unlike traditional ‘dummy cameras’, FlashCAM decoys are usually much more effective when they have been deployed after the FlashCAM has made its presence known.

MOTION:
I move to approve/not approve, contingent on prior application approval of the Palm Beach Sheriff Office, the use of $23,415 in State Law Enforcement Forfeiture Funds for the purchase of security FlashCAMs from Q-Star Technology.

ATTACHMENT(S):
Fiscal Impact Analysis
Quote
Presentation

FISCAL IMPACT ANALYSIS

A. Five Year Summary of Fiscal Impact:

Fiscal Years	2015	2016	2017	2018	2019
Capital Expenditures	0	0	0	0	0
Operating Expenditures	23,415	0	0	0	0
External Revenues	0	0	0	0	0
Program Income	0	0	0	0	0
In-kind Match	0	0	0	0	0
Net Fiscal Impact	23,415	0	0	0	0
No. of Addn'l Full-Time Employee Positions	0	0	0	0	0

B. Recommended Sources of Funds/Summary of Fiscal Impact: State Law Enforcement Forfeiture Fund

Leisure Services		State Confiscated / Forfeiture Fund					
Account Number (s)		**Account Description**	**FY 2015 Budget**	**Available Project Balance**	**Budget Transfer**	**Agenda Expenses**	**Remaining Project Balance**
647-3010-521-49-90		Operating Expenses/Other	50,021	50,021	-	(23,415)	26,606

C. Department Fiscal Review: _JR_

2730 Monterey Street, Suite #106
Torrance, CA 90503
T: 310.294.8194 F: 310.781.1025

FLASHCAM
Portable Crime Deterrence

SOLUTION OVERVIEW AND PRICE QUOTE

DATE	QUOTE#
10/16/2014	131557

Prepared For:
Juan Ruiz, Leisure Services Director City of Lake Worth 1121 Lucerne Avenue Lake Worth, FL 33460 P: (561) 586-0361 E: JRuiz@lakeworth.org

To Address Nuisance Crimes

including Vandalism, Trespassing, Illegal Dumping, Graffiti, and all Unwanted Activity

City of Lake Worth, FL

I. OBJECTIVE
II. SCOPE OF SOLUTION
III. VENDOR INFORMATION
IV. FLASHCAM QUOTE PROPOSAL

October 16, 2014

This quote will expire in 30 days unless a written request indicating the intent to purchase is received.

This information is provided solely for the intended recipient and may not be used to solicit other vendors.

2730 Monterey Street, Suite #106
Torrance, CA 90503
T: 310.294.8194 F: 310.781.1025
www.qstartech.com

MADE IN USA

2730 Monterey Street, Suite #106
Torrance, CA 90503
T: 310.294.8194 F: 310.781.1025

Portable Crime Deterrence

SOLUTION OVERVIEW AND PRICE QUOTE

I. OBJECTIVE:

Addressing Nuisance Crimes in Lake Worth, FL. Nuisance Crimes are chronic issues nationwide costing cities millions of dollars annually. Specifically, nuisance crimes in the city of Lake Worth are known issues creating disturbances in the area, and it may be only a matter of time before an incident occurs that will cost City of Lake Worth significant time and materials to mitigate not to mention the costly distractions to manpower and mission. Besides wasting precious resources and funding, it also raises concerns about overall public safety, declining property value and the well-being of the community.

II. SCOPE OF SOLUTION:

Addressing Crime at the Source. A key element in proactively fighting nuisance crimes is to address the issue directly at the source - the criminals themselves. It is, of course important to quickly reverse the damages resulting from the crime, but if the culprit has not been addressed directly, they most likely will strike again. This is a common challenge that many cities encounter, investing thousands of dollars into the resources and materials to reverse the damages, yet not stopping the criminal or, if warranted, identifying and prosecuting them. Ultimately the issue will persist unless the culprit is truly deterred.

The FlashCAM Is a <u>Proactive</u> Solution to Stop Nuisance Crimes. For over 18 years, Q-Star Technology has been helping cities across the country address issues of nuisance crimes with the FlashCAM portable crime deterrent systems. The FlashCAM is a crime fighting tool designed specifically to protect cities from nuisance crimes such as graffiti, vandalism, illegal dumping, metal/equipment theft and other unwanted activities. These types of crimes destroy property, increase liability risks and deplete precious resources and budgets. The longer these issues are not addressed, the bigger the problem becomes.

High Resolution Imaging. Since the FlashCAM is a deterrent system rather than surveillance, the security efforts are proactive instead of reactive to the crime. The unique features (ie: motion-triggered strobe flash and customizable voice warning) stop the criminals before they can strike. The system also captures high resolution (12+ megapixel) images of the activity, suspects and license plates, even in complete darkness (approx. 250 ft.). The clarity of the captured images allows law enforcement to identify and prosecute these criminals with this key evidence.

No Infrastructure Requirements – No Expensive Installation Crews. The FlashCAM is completely self-contained. There is no hard wiring required with the solar-charged battery. This simplifies installations and system movement. Many FlashCAM users partner with other departments within their city to rotate their systems to various locations such as: parks, schools, power substations, recycling facilities, bridges/highways, water reservoirs, historical monuments etc. The portability and ease of installation of the FlashCAM, as well as the versatility on a range of applications, allow cities to develop a comprehensive program to combat nuisance crimes within their community in even the most remote locations.

2730 Monterey Street, Suite #106
Torrance, CA 90503
T: 310.294.8194 F: 310.781.1025

Portable Crime Deterrence

SOLUTION OVERVIEW AND PRICE QUOTE

FlashCAM Solution to Stop Nuisance Crimes in Lake Worth, FL. For immediate issues in Lake Worth, FL (3) FlashCAM 880SX Starter Pack will enable the City of Lake Worth to start a small scale program to begin to address issues and familiarize the department and city with the unique capabilities of this tool.

Portable Solution for Nuisance Crimes. Once specific issues have been addressed, the system can be moved to other 'hot spots' replacing it with a Decoy system. Unlike traditional 'dummy cameras', FlashCAM Decoys are usually much more effective when they have been deployed AFTER the FlashCAM has made its presence known.

This proposal includes:

- A FlashCAM-880SX Starter Package includes:
  - ONE (1) FlashCAM-880SX
  - TWO (2) FlashCAM-DB2 decoy systems
  - THREE (3) wall mounting brackets
  - ONE (1) RF keyfob controller,
  - ONE (1) battery charger,
  - ONE (1) 2.0 GB Secure Digital Memory Card
  - SEVEN (7) Quick Move Adapters (QMA)

- FlashCAM-DB2 decoy systems will help enhance the deterrence program and increase the rotation coverage of the FlashCAM- 880 SX system(s) throughout various trouble locations.

- Each FlashCAM-880SX includes one unlimited online orientation.

- The wall mounting bracket and QMA hardware are used to mount the systems to the desired location, and the system can be quickly installed at any location where a QMA is mounted. The RF keyfob allows control of the FlashCAM-880SX from ground level, such as: changing settings, checking battery status etc.

- Each FlashCAM-880SX system includes a one (1) year factory warranty. Optional Extended Warranty coverage is available through additional purchase.

- Optional onsite consultation services are available through additional purchase.

Community Impact

The "Broken Window Theory," introduced in the early 1980's and effectively used in the 1990's to lower the crime rate to historic lows in New York City, suggests that by addressing lesser crimes such as vandalism the overall crime rate can be lowered by creating an environment that encourages community involvement and discourages criminal activity. This FlashCAM program will thus help create awareness in residents as well as the would-be criminals that crime will not be tolerated in Lake Worth, FL. This is the real key to addressing this issue. One could call this: Behavioral Modification through Forced Accountability!

The long term benefit of stopping nuisance crimes at the source of the issue not only helps protect this specific location from any further damage but it also helps maintain a safe and healthy environment for the entire community.

III. VENDOR INFORMATION:

Q-Star Technology is a Veteran-Owned Small Business, GSA Certified, Sole Source vendor, with all FlashCAMs proudly manufactured in the USA (Torrance, CA) for over 18 years. The FlashCAM is a unique one-of-a-kind product, with no other product like it in the market.

GSA Contract Number: GS-07F-0355U
Sole Source Letter Available Upon Request: 310.294.8194

Contact Information:

Regional Representative
Name: Cheri Fyfe
Title: SE Regional Manager
Tel: 407-242-8899
Email: CFyfe@qstartech.com

Corporate Headquarters:
Q-Star Technology
2730 Monterey Street, Suite #106
Torrance, CA 90503
T: 310.294.8194 F: 310.781.1025
www.qstartech.com

2730 Monterey Street, Suite #106
Torrance, CA 90503
T: 310.294.8194 F: 310.781.1025

Portable Crime Deterrence

IV. FLASHCAM QUOTE:

Terms	Rep	FOB
Net 30	CF	Torrance, CA

ITEM #	Description	Qty	Unit Price	Total
FC 880SX Starter Pack	FlashCAM 880SX Starter Package	3	$ 7,650.00	$ 22,950.00
Shipping - Starter Pack	Shipping (Non-Taxable) for Starter Pack	3	$ 155.00	$ 465.00
			SUBTOTAL	$ 23,415.00
		Sales Tax	0.00%	$ -
			TOTAL:	$ 23,415.00

MADE IN USA

ADDENDUM INFORMATION:

I. FlashCAM-880SX Digital System with Wireless Download Specifications

II. Customer References

III. Sole Source Letter

2730 Monterey Street, Suite #106
Torrance, CA 90503
T: 310.294.8194 F: 310.781.1025

FLASHCAM
Portable Crime Deterrence

SOLUTION OVERVIEW AND PRICE QUOTE

I. FlashCAM-880SX Digital System with Wireless Download Specifications

Wireless download of pictures onto a laptop computer

Customer Hardware Requirement for Wireless Download: A laptop computer with 802.11b wireless capability and either Microsoft Windows 2000, XP, Vista or Windows 7 operating system

Operating range: Up to 100 feet

Sensing device: IR Motion Sensor with Variable Trigger Options - adjustable sensor delays to reduce false triggers

Camera: 12+ megapixels Digital Camera resolution (depending on availability)

Bright Flash: Proprietary design. Captures night time images and acts as deterrence (Can be disabled.)

Camera Memory: 2.0 Gigabyte Secure Digital Memory Card

Photographs per event: User selectable 1, 2, 3 or 4

Optical Zoom: Four selectable discrete ranges

Keyfob Control Modes:

ARM – stays armed until changed
SENSOR – Arms at dusk; disarms at dawn
DISARM – stays disarmed until changed
DOWNLOAD – Wireless download of picture files
TEST - Test system features

Delayed Arm: 0 – 8 hours from dusk (user selectable)

Delayed Take: Can be set for 20 seconds or 60 seconds

Voice output: Supports up to 14 second voice message

Voice record: Pushbutton controls support recording and playback of voice messages

Remote control: 5-button keyfob to change modes, allow status reporting and reset photo counter

Remote control range: 75 ft at 20 ft AGL

System Status reporting: Via voice prompts and audible beep code

Test Modes: Test daylight sensor; motion sensor field-of-view test and system test

License mode: Sets camera lens to allow photographing reflective surfaces. This allows the camera to capture a license plate number more than 250ft away in TOTAL DARKNESS

System Power: Solar Panel (with 30 Ampere Hour rechargeable battery)

Case: 16 gauge steel with bullet resistant Lexan covering the camera lens

Mounting: Heavy-duty (removal resistant) wall bracket. C-Clamp parapet mounting optional

Dimensions: H: 6.81" W: 10.21" D: 11.25" WEIGHT: 20 LBS.

II. Customer References

"We have not experienced any of these acts (theft & vandalism) once we installed the FlashCAM. The FlashCAM is able to help capture (vehicle license plates) evidence, even in the dark."

- Barry Crowley, Safety & Security
Hernando County Schools
Brooksville, FL

"At our schools the FlashCAM has put an END to ongoing vandalism, saving tens of thousands of dollars in broken windows alone.... Vandalism has dropped 90%. The dollar savings is really not as important as the emotional value the FlashCAM provides. Kids no longer have to deal with walking into vandalized classrooms and over turned desks."

- Jeff Christensen, Central School District
Director of Maintenance & Operations
Rancho Cucamonga, CA

"We have had great success with our 6 (FlashCAMs)...We mainly use them for graffiti prevention but have caught several thefts and even a sex assault suspect... we were watching a dumpster in the area and just happened to flash at the right time to get him fleeing the scene."

- Sgt. Scott Wegscheider
Brighton Police Department
Brighton, CO

"The (FlashCAMs) have been up for over a year and not a scratch has been made on our facility... We are situated in a high risk area, but since we installed the FlashCAMs, we have not seen any damage on our facility."

- Craig Callahan
Bernalillo County Parks & Recreation
Albuquerque, NM

October 16, 2014

Juan Ruiz, Leisure Services Director
City of Lake Worth
1121 Lucerne Avenue
Lake Worth, FL 33460
P: (561) 586-0361

Mr. Juan Ruiz,

C i it t t y t i i i o t to t i o i t ft ffiti i t i ot ti o i io C y t o i t y t o o y t t i o f t i t i t i y y t o t i i i t i o y y t o o y

y t tt y i o y o t y t i o t f t i o o o o i t y oi f t o o y t o o y i t o y t o i of i fo t C i o ot t t t o t t t C t o t o y i t o y o fo f t i i t i tio of t C

i y

t i i t
t o o y C

Q-STAR TECHNOLOGY

WE ARE WATCHING…

SO YOU DON'T HAVE TO!

Introductions…

Why are we here?

WARNING
05/11/2012

WARNING
PARK AREA UNDER
VIDEO
SURVEILLANCE
05/11/2012

MARGATE POLICE DEPARTMENT
WARNING
PARK AREA UNDER
VIDEO
SURVEILLANCE
05/11/2012

DETERRENCE

VS

SURVEILLANCE

Behavior Modification

- Presence
- Verbal Command

FlashCAM-880 SX

- *Completely Self-Contained & Portable*
- *Solar Charged 30 Amp hr Battery*
- *Motion Activated*
- *Ruggedized Steel Case*
- *High Resolution Images with Wireless Download*
- *Captures License Plates at 250ft. In Total Darkness*
- *Customizable Voice Message*

What’s Inside the FlashCAM?

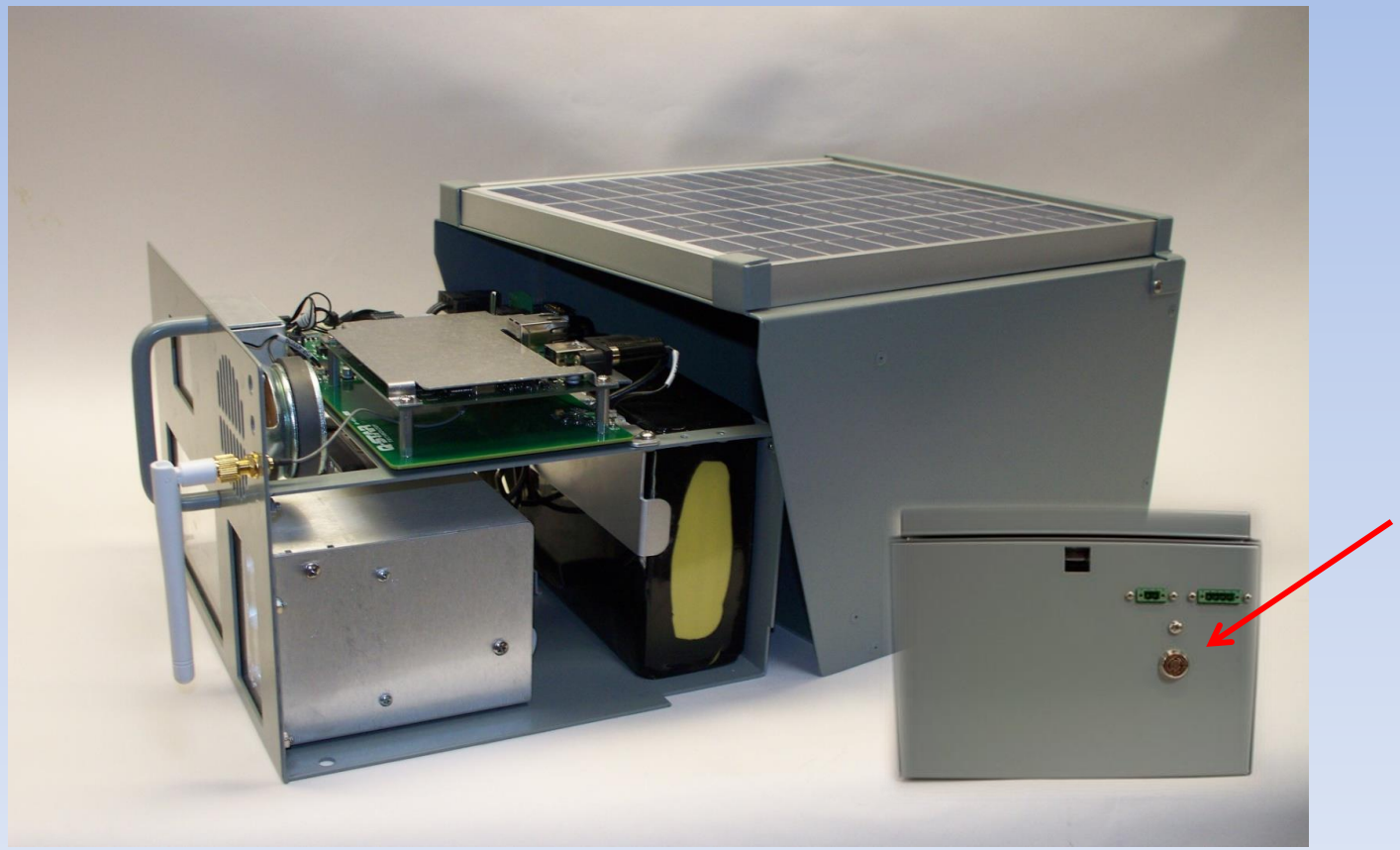

The company's customer base is wide and varied. We are proud to partner with the following agencies and businesses in fighting crime:

- Law Enforcement Agencies
- Parks and Recreation Departments
- Schools and Universities
- Public Works Departments
- Neighborhood Services
- Keep America Beautiful Affiliates
- Water Companies
- Utility Companies
- Construction Companies
- Business & Industrial Parks
- Oil Services Companies
- Business Owners
- Outdoor Sign Companies

- ***Heavy Duty Wall Mount Bracket & Quick Move Adapter for easy installation***

- ***Hardened steel chain & padlock provide added protection***

Altec

10.14.2013 21:19

HEAT 2012/13
10.14.2013 21:19

YANKEE STADIUM

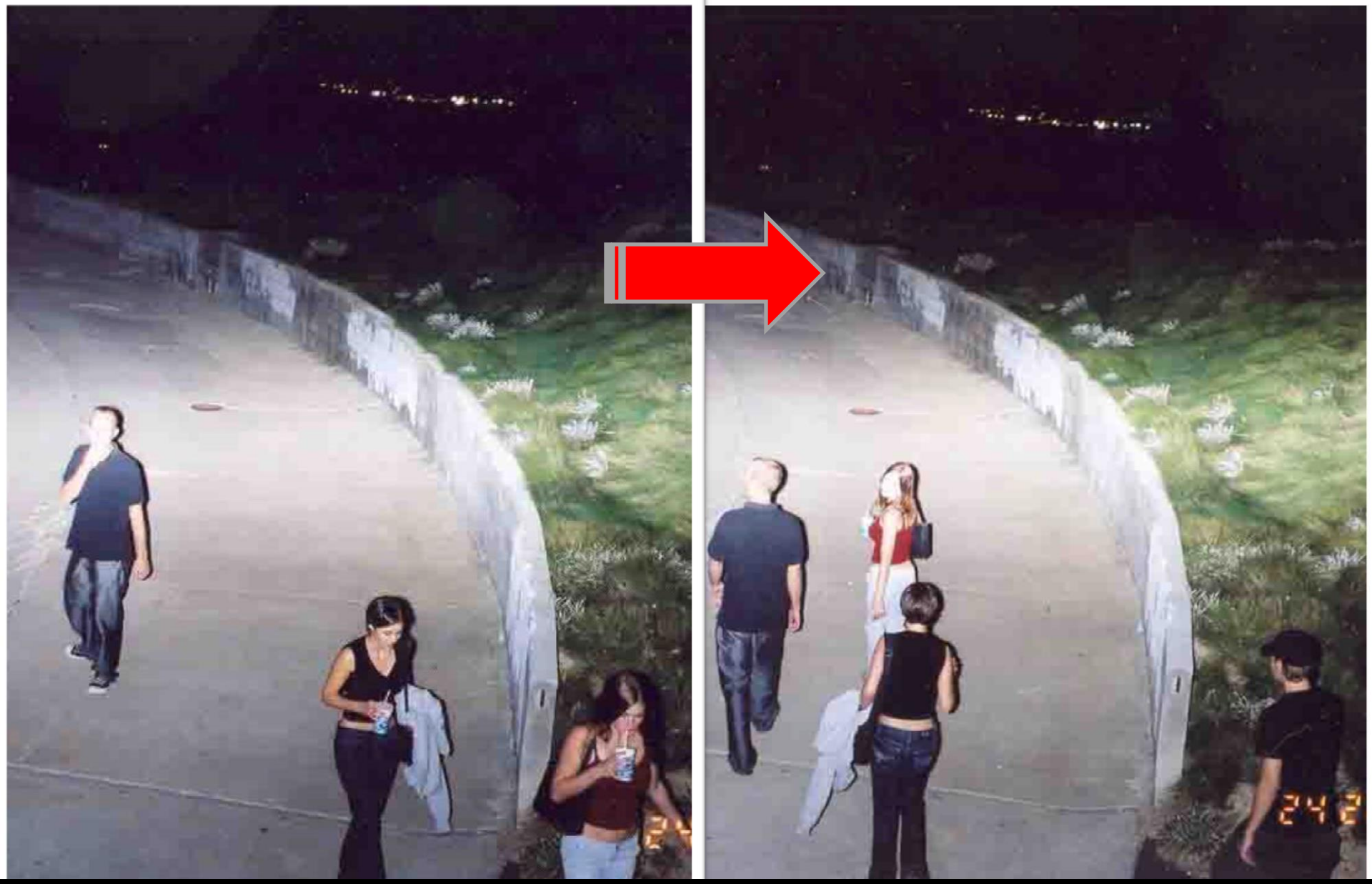

TRESPASSING

Actual FlashCAM photo – Valencia, CA

SCHOOL BUS

Car Burglar Caught in the Act

Remote Solar Panel Installation

05/08/20

Political Crimes

03/14/2012
ZOOM

03/14/2012

No Graffiti Tonight

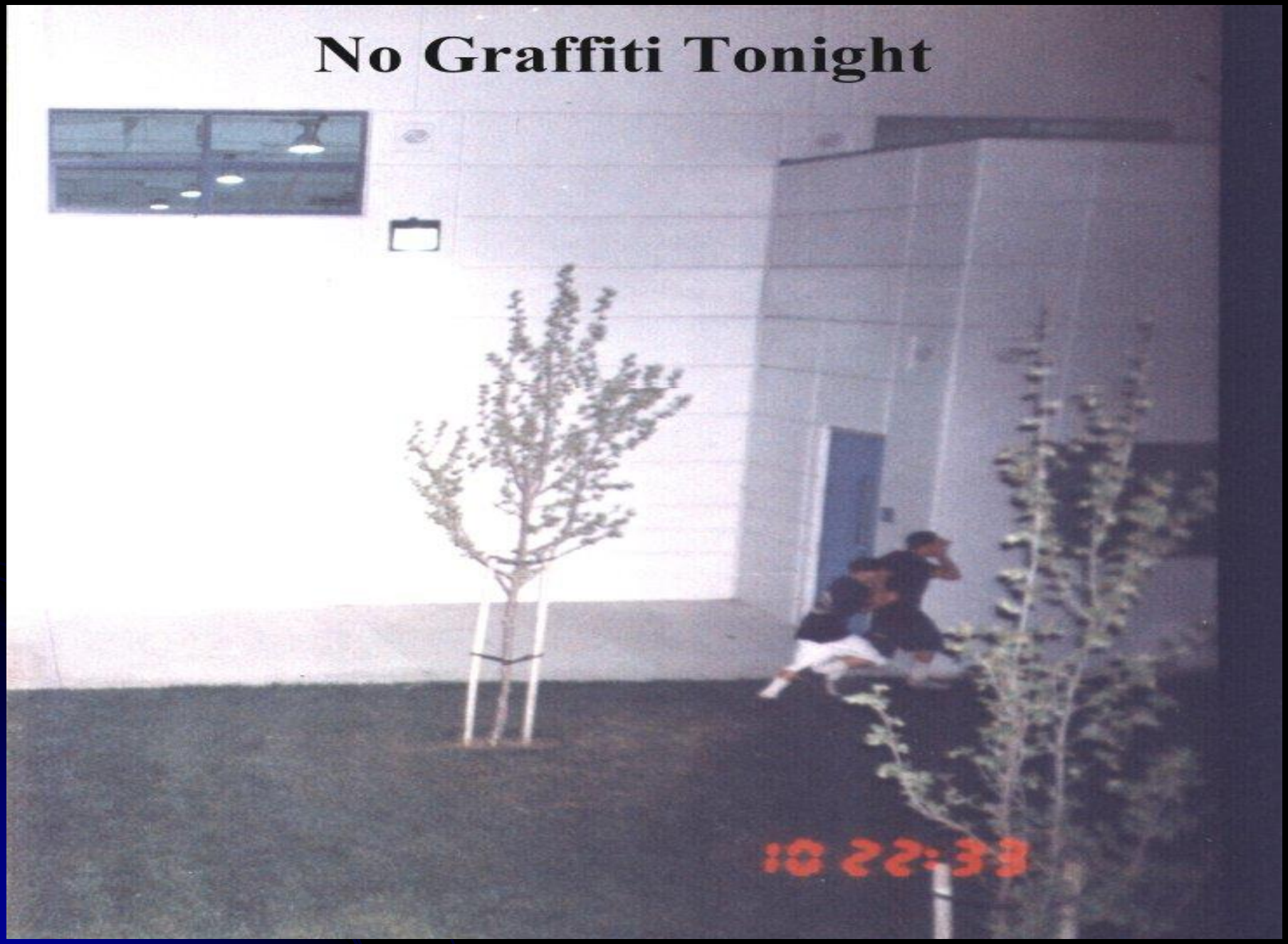

10/12/2011

FlashCAM was set to 60 seconds delay so the taggers had time to start

Most users turn off the delay so the vandal leaves ***before*** they start tagging.

Customers
have reported a
90-100%
reduction
in unwanted
activity.
Actual FlashCAM photo – Yakima, WA

DETERRENCE IN ACTION

Deter construction site theft. This is a water reservoir construction site in Texas.

Would be thieves are COMING and GOING ----------→

No harm done!

- Close up shots for identification

Photo on bottom right is an enlargement of the area showing the truck license plate number.

SUSPECTS WERE LATER **ARRESTED** AND **PROSECUTED** FOR TRESPASSING

BLUE BUNNY

03/13/2012

04/03/2012

04/19/2012

Identified and prosecuted by Tampa PD

Identification

ILLEGAL DUMPING - Columbus, OH

Yakima, WA News Coverage – September 2013

How does the wireless download work?

Kansas city parks maintenance

Jacksonville, Florida Officer running a license plate

Testimonials

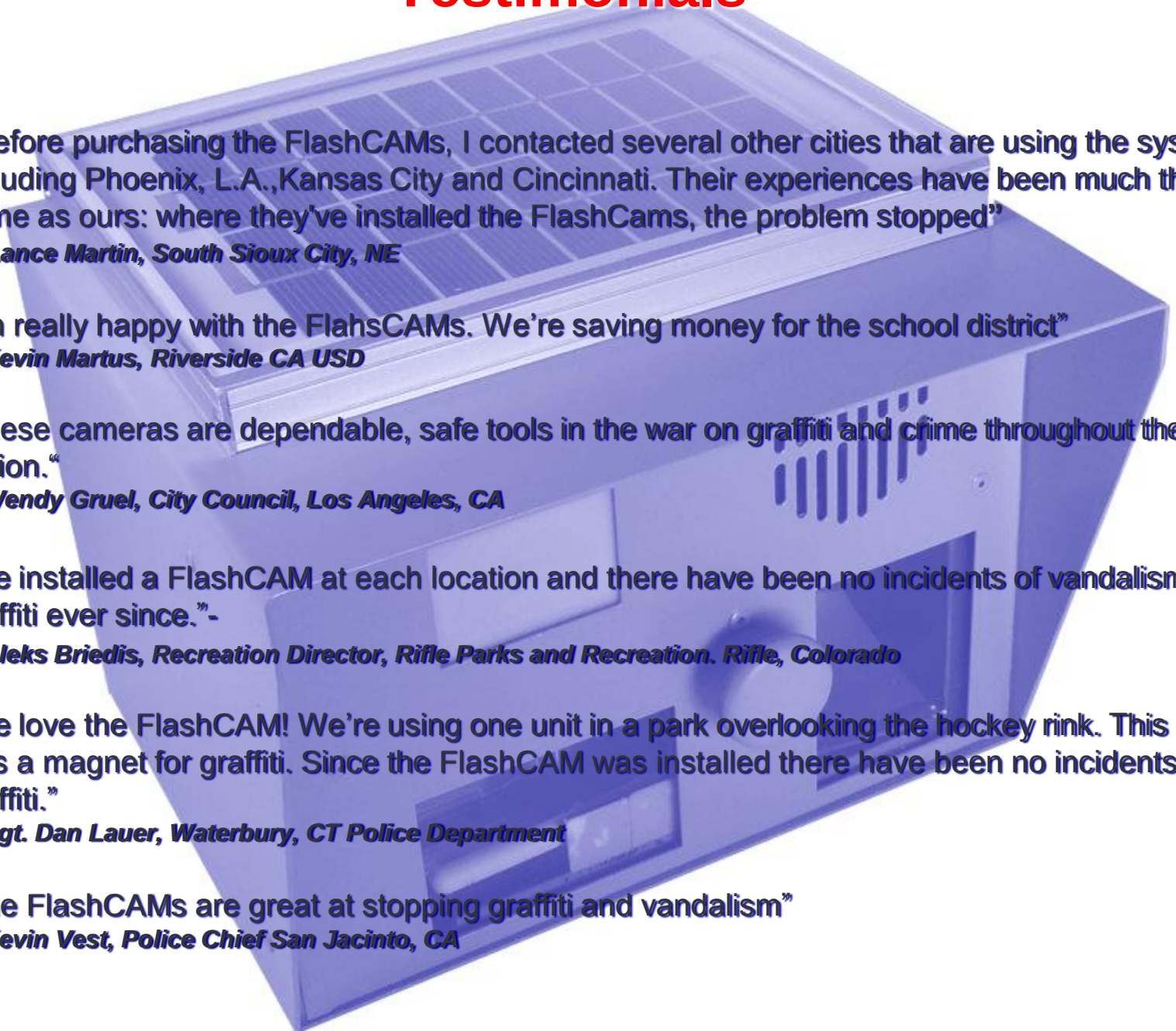

“ Before purchasing the FlashCAMs, I contacted several other cities that are using the system, including Phoenix, L.A.,Kansas City and Cincinnati. Their experiences have been much the same as ours: where they've installed the FlashCams, the problem stopped”

Lance Martin, South Sioux City, NE

“I’m really happy with the FlahsCAMs. We’re saving money for the school district”

Kevin Martus, Riverside CA USD

"These cameras are dependable, safe tools in the war on graffiti and crime throughout the region.“

Wendy Gruel, City Council, Los Angeles, CA

“We installed a FlashCAM at each location and there have been no incidents of vandalism or graffiti ever since.”-

Aleks Briedis, Recreation Director, Rifle Parks and Recreation. Rifle, Colorado

“We love the FlashCAM! We’re using one unit in a park overlooking the hockey rink. This site was a magnet for graffiti. Since the FlashCAM was installed there have been no incidents of graffiti.”

Sgt. Dan Lauer, Waterbury, CT Police Department

“The FlashCAMs are great at stopping graffiti and vandalism”

Kevin Vest, Police Chief San Jacinto, CA

Resources

- GSA Contract Number Available
- Schedule 84 Approved
- Sole Source Letter
- Available Grants

FlashCAM
Your first line of defense!!!

Made in USA

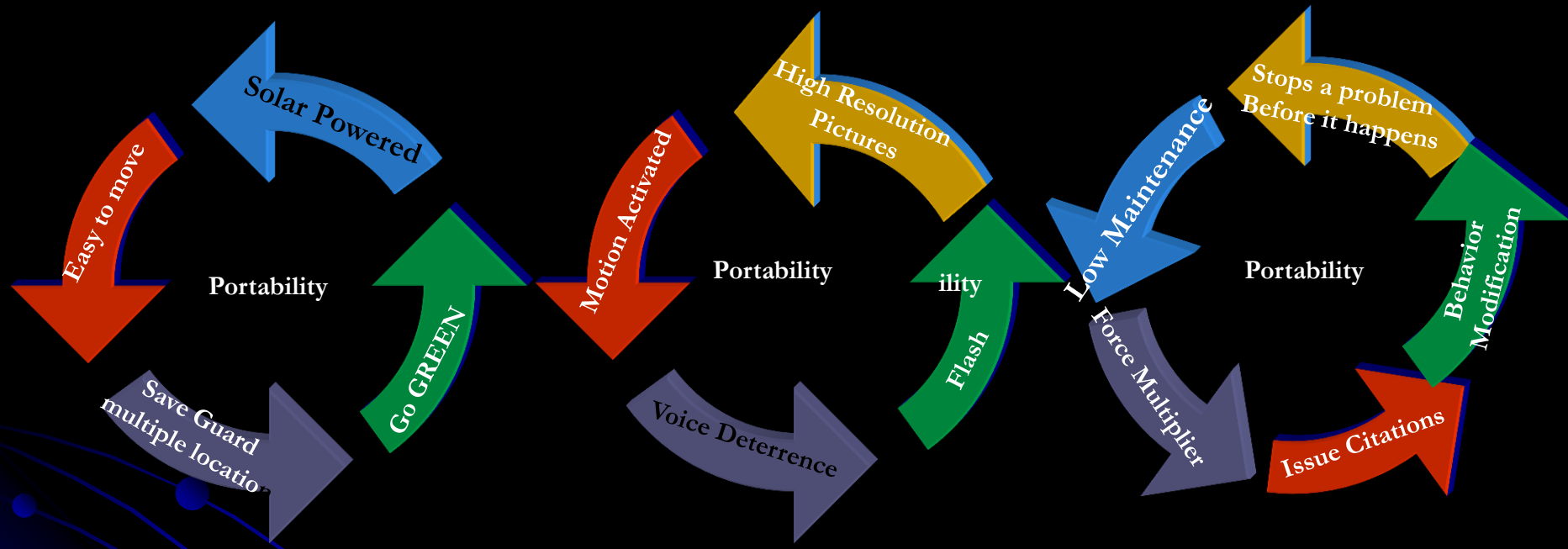

CITY OF LAKE WORTH

7 North Dixie Highway · Lake Worth, Florida 33460 · Phone: 561-586-1600· Fax: 561-586-1750

AGENDA DATE: December 2, 2014, Regular Meeting **DEPARTMENT:** City Commission

---

EXECUTIVE BRIEF

TITLE:
Ratify appointment of board members to the Electric Utility Advisory Board

SUMMARY:
This item is to ratify the City Commission's appointment of Michelle Gordon as an at-large utility service area representative for a term ending on July 31, 2015, and Commissioner Szerdi's appointment of Sander Schrantz for the unexpired term ending on July 31, 2015.

BACKGROUND AND JUSTIFICATION:
On November 13, 2014, the Village of Palm Springs Council selected Michelle Gordon, with a 3-2 vote, to represent them as a member of the City's Electric Utility Advisory Board.

On February 5, 2013, the Commission adopted an ordinance amending the board member appointment process to allow for the selection of board members by individual elected officials. In accordance with the ordinance, the board appointments would be effective upon ratification by the Commission as a whole.

MOTION:
I move to ratify the City Commission's appointment of Michele Gordon to the Electric Utility Advisory Board for a term ending on July 31, 2015, and Commissioner Szerdi's appointment of Sander Schrantz for the unexpired term ending on July 31, 2015.

ATTACHMENT(S):
Fiscal Impact Analysis – not applicable
Board Membership Applications

Village of Palm Springs

Executive Brief

AGENDA DATE: November 13, 2014

DEPARTMENT: Clerk's Office/Administration

ITEM #26: Appointment to the Lake Worth Electric Utility Advisory Board

SUMMARY:
The City of Lake Worth established the Electric Utility Advisory Board a few years ago to address fair and equitable policies, plans and programs that would be consistent with customer needs, legal mandates, public policy, operational requirements and long-term financial stability and viability of their electric utilities.

The portion of Palm Springs residents who are located in the Lake Worth Electric Service Area had formed an ad hoc committee to have their concerns heard by both the Village Council and the Lake Worth Commission. Lake Worth offered to have a member seat on their Advisory Board to represent Palm Springs interests. Council Member Joni Brinkman held that seat until a conflict arose from another organization she was appointed to, and she was required to resign.

Two Palm Springs residents who live in the Lake Worth Electric Service Area have submitted their applications to become a member of the Lake Worth Electric Advisory Board for a three year term. It is requested that Council nominate one of the applicants to fill the member seat vacated by Council Member Brinkman.

FISCAL IMPACT:
There is no fiscal impact for the Village; however, a Palm Springs voice on this Advisory Board would give those residents in this service area an opportunity to be a part of the solutions for future consistency and equitable electric rates.

ATTACHMENTS:
1. Application of Charles G. Nefzger, Morgans Way, Palm Springs
2. Application of Michele Gordon, Riverdale Road, Palm Springs

VILLAGE OF PALM SPRINGS

APPLICATION FOR APPOINTMENT TO VILLAGE COUNCIL ADVISORY BOARDS

NAME: Michele Gordon **HOME PHONE:** 561-767-0599

ADDRESS: 312 Riverdale Rd Palm Springs

EMAIL ADDRESS: resquei3@aol.com **CELL PHONE:** 561 767-0599

OCCUPATION: Fire Captain

BUSINESS: _____ **PHONE:** _____

BUSINESS ADDRESS: _____

BRIEF DESCRIPTION OF EDUCATION/EXPERIENCE: I have 19 years of public servant. I am responsible for making sure the citizens and visitors of my city are safe.

Are you a registered voter? Yes ✓ No ___

Do you currently serve on a board? Yes ___ No ✓

If yes, which one? _____

Please indicate on which board you wish to serve. If more than one, number for preference.

___ Library Board
___ Land Development Board
___ Leisure Services Board
___ Police Employees Pension Board of Trustees
___ General Employees' Pension Board of Trustees
___ Construction Board of Adjustment and Appeals
___ Grievance Board
✓ Lake Worth Utilities Board

Why are you interested in serving on this board? I live in Palm Springs and currently have Lake Worth. I would like to be the voice for the Village

Signature Michele Gordon **Date:** 10-30-14

For further information call the Village Clerk at 965-4010. Fax 965-0899

APPLICANT'S NAME: Sander Schrantz
(Print name)

VOLUNTEER ADVISORY BOARD APPLICATION

THIS APPLICATION IS VALID FOR ONLY ONE (1) YEAR FROM THE DATE ENTERED ON PAGE 5.

Thank you for your interest in serving the City of Lake Worth. The City Commission recognizes that volunteering is important, and your contribution is what makes Lake Worth a great community. Completion of this application is necessary so that the members of the City Commission can thoroughly review each application as part of their consideration for your appointment.

If applying for more than one Board/Committee, please number in order of preference. If you have previously submitted an application, it will be removed from our files unless you mark the board(s) previously applied for on this application. Please choose no more than three Boards/Committees for which you wish to apply. When selecting, indicate your first, second, and third preference. ***You may not serve on two of the following boards/committees at one time: Construction Board of Adjustments and Appeals, Community Redevelopment Agency, Historic Resources Preservation, or Planning & Zoning Boards.***

___ Board of Trustees Employees' Retirement System *
___ Board of Trustees Police Retirement System *
___ Board of Trustees Firefighters' Pension Trust Fund *
___ Board of Trustees Firefighters' Pension Trust Fund – Division II *
___ City Recreation Advisory Board
___ City Tree Board
___ Community Redevelopment Agency *
___ Construction Board of Adjustments and Appeals **
X Electric Utility Advisory Board
___ Finance Advisory Board
___ Historic Resources Preservation Board **
___ Library Board
___ Planning & Zoning Board * **
___ Sister City Board

City Commission
OCT 27 2014
CLW - Received

* Requires that appointee fill out an annual financial disclosure form to be filed with the Supervisor of Elections Office

** Certain skill-set disciplines required

ALL BOARD/COMMITTEES ARE SUBJECT TO THE SUNSHINE LAW

1. **PERSONAL**

Name: Mr./Mrs./Ms. *(circle one)* Sander Schrantz (print)

Residence: 210 South M. Street

City: Lake Worth State: FL ZIP Code: 33460

Proof of residency attached: License

Mailing Address: (if different from residence)

City: _____ State: _____ ZIP Code: _____

Home Phone: (____) _____ Business Phone: (____) _____

Cell Phone: (____) _____ Email Address: _____

Are you a citizen of the United States? yes

Are you a registered Palm Beach County voter? yes

Are you a registered Lake Worth voter? yes

How long have you been a resident of Lake Worth? 3 years

List all properties owned and/or business interests in Lake Worth? _____

212.5 South M Street ~~(Duplex)~~

What is your occupation? Non-profit Director

Employer? HandsOn Broward

Business Address: (CRA board only) _____

Are you currently serving on any City advisory Board? no

If so, which board? _____

Have you ever served on a City of Lake Worth board? yes

If so, when and which board(s)? Electric Utility Advisory

Do you serve on any boards in Florida, or are you an elected or appointed state, county, or municipal office holder, or Palm Beach County employee? _____

If yes, please name the board, position, etc. Lake Worth CDC ~~Pres~~ President of Board

2. **EDUCATION**
High School: Woodson Date of Graduation: '01

College: George Mason Degree: B.A. Date of Graduation: 01/09

Resume attached? yes _____ no x

3. **WORK EXPERIENCE**

4. **INTEREST/ACTIVITIES**

5. **COMMUNITY INVOLVEMENT**

6. **Why do you desire to serve on this board (first preference)**

To give back to my Community and Continue my Service of past 2 years

6. **Why do you desire to serve on this board (second preference)**

6. **Why do you desire to serve on this board (third preference)**

I understand the responsibilities associated with being a board/committee member, and I have adequate time to serve if appointed.

I have read Ordinance No. 2010-29 and Article XIII (Palm Beach County) Code of Ethics attached hereto, and understand the policy on the City of Lake Worth's Code of Ethics. Within 30 days after appointment, I understand that I am required to participate in Ethics Training and submit an Acknowledgement of Receipt form to the City Clerk's Office in order to continue to serve on my appointed board.

PLEASE INITIAL _____

Signature _____ Date 9/29/14

THIS APPLICATION IS VALID FOR ONLY ONE (1) YEAR FROM THE DATE SIGNED ABOVE.

NOTE: Information regarding the duties and responsibilities of any board/committee can be found by visiting our website at www.lakeworth.org then select Residents/Volunteer and select the Volunteer Advisory Board application. If you need additional information, please contact the Volunteer Coordinator at sdonaldson@lakeworth.org or by calling 561-586-1730.

EMAIL APPLICATION TO: sdonaldson@lakeworth.org (preferred method)

or

FAX APPLICATION TO: Volunteer Coordinator (561) 586-1750

or

RETURN APPLICATION TO: Volunteer Coordinator
Lake Worth City Hall
7 North Dixie Highway
Lake Worth, FL 33460

SUNSHINE LAW: The primary purpose of government in the Sunshine Law is to assure public access to the decision making processes of public boards and committees. The Sunshine Law extends to discussions and deliberations as well as to formal actions taken by boards and committees.

Gary R. Nikolits, CFA
Property Appraiser
Palm Beach County

Homestead Exemption E-file

Location Address	210 S M ST
Municipality	LAKE WORTH
Parcel Control Number	38-43-44-21-15-093-0060
Subdivision	LAKE WORTH TOWN OF
Official Records Book	25736 Page 1144
Sale Date	JAN-2013
Legal Description	TOWN OF LAKE WORTH LT 6 BLK 93

Owners

[redacted]
SCHRANTZ SANDER &

Mailing address

210 S M ST
LAKE WORTH FL 33460 4110

Sales Date	Price	OR Book/Page	Sale Type	Owner
JAN-2013	[redacted]	25736 / 1144	WARRANTY DEED	SCHRANTZ SANDER &
SEP-2010	[redacted]	24099 / 1259	WARRANTY DEED	SOUTHERN ENGINEERING & CONSTRUCTION LLC
JUN-2010	[redacted]	23917 / 0111	CERT OF TITLE	FIDELITY NATIONAL TRUST LLC
MAY-2006	[redacted]	20444 / 1272	WARRANTY DEED	BERGER RICHARD L
FEB-2005	[redacted]	18170 / 0599	WARRANTY DEED	SILLS JAMES M

1 2

No Exemption Information Available.

Number of Units [redacted] *Total Square Feet [redacted] Acres [redacted]

Use Code 0801 - MULTIFAMILY < 10 UNITS -COMM ZONING Zoning PO/MF-30 - Professional Off' & MFR (Med) (38-LAKE WORTH)

Tax Year	2014	2013	2012
Improvement Value	[redacted]	[redacted]	[redacted]
Land Value	[redacted]	[redacted]	[redacted]
Total Market Value	[redacted]	[redacted]	[redacted]

All values are as of January 1st each year

Tax Year	2014	2013	2012
Assessed Value	[redacted]	[redacted]	[redacted]
Exemption Amount	[redacted]	[redacted]	[redacted]
Taxable Value	[redacted]	[redacted]	[redacted]

Tax Year	2014	2013	2012
Ad Valorem	[redacted]	[redacted]	[redacted]
Non Ad Valorem	[redacted]	[redacted]	[redacted]
Total tax	[redacted]	[redacted]	[redacted]

CITY OF LAKE WORTH

7 North Dixie Highway · Lake Worth, Florida 33460 · Phone: 561-586-1600· Fax: 561-586-1750

AGENDA DATE: December 2, 2014, Regular Meeting **DEPARTMENT:** Water Utilities

---

EXECUTIVE BRIEF

TITLE:
Purchase Authorization for Badger water meters from Innovative Metering Solutions, Inc.

SUMMARY:
This Item authorizes the purchase of water meters at a cost not to exceed $145,000.00 for Fiscal Year 2015.

BACKGROUND AND JUSTIFICATION:
The Water Utilities Department is requesting authorization to purchase Badger water meters from Innovative Metering Solutions, Inc. These meters will enable Water Distribution staff to continue their program of replacing water meters that are over 10 years old with newer, more accurate meters.

Innovative Metering Solutions, Inc. is the sole source vendor for Badger Meters in the state of Florida. See attached Sole Source letter.

Meters will be purchased in the following quantities and prices:

- **200** Badger's M25 5/8 X ¾ METER W/ADE encoder register complete with Itrons's 100W water radio transmitter: 200 x $198.90 = **$39,780.00**
- **100** Badger's M55 1" meter W/ADE encoder register complete with Itron's 100W water radio transmitter: 100 x $275.70 = **$27,570.00**
- **75** Badger's M120 1 ½' meter W/ADE encoder register complete with Itron's 100W water radio transmitter: 75 x $478.50 = **$35,887.50**
- **50** Badger's M170 2" METER W/ADE encoder register complete with Itron's 100W water radio transmitter: 50 x $603.85 = **$30,192.50**
- **70** Retrofit meters for ones existing in the field: 70 x $164.75 = **$11,532.50**

Total Purchase = **$144,962.50**

MOTION:
I move to approve/disapprove a purchase with Innovative Metering Solutions, Inc. for an amount not to exceed $145,000.00 for Fiscal Year 2015.

Attachments
1) Fiscal Analysis
2) Innovative Metering Solutions, Inc. Quote
3) Sole Source Letter

FISCAL IMPACT ANALYSIS

A. Three Year Summary of Fiscal Impact

Fiscal Years	2015	2016	2017
Capital Expenditures	0	0	0
Operating Expenditures	$145,000	0	0
External Revenues	0	0	0
Program Income	0	0	0
In-Kind Match	0	0	0
Net Fiscal Impact	$145,000	0	0

B. Recommended Source of Funds/Summary of Fiscal Impact

The funds have been identified in the 2015 Operations and Maintenance budget from account 402-7034-533.46-60.

Utilities/Water Production							
Account Number	Account Description	Project #	FY 2015 Proposed Budget	Amended Budget	Current Balance	Agenda Item Expenditures	Remaining Balance
402-7034-533.46-60	Meters/ Lines	N/A	$209,900	N/A	$199,313	-$145,000	$54,313

C. Fiscal Review:

Monica Shaner - Engineer
Larry Johnson – Director
Clyde Johnson – Finance

Innovative Metering Solutions, Inc.

2501-A Merchant Ave.
Odessa, Florida 33556
Phone 727.375.9701 Fax 727.375.9703
www.inmetering.com

Quotation

Quote # SP
Date: 10-17-14

Ship To
City of Lake Worth Attn: Judy Love

Fax #	Phone #	Freight	Terms
		FOB	Net 30

Description	Qty	Price Each	Total
Badger's M25 5/8 x ¾" meter w/ ADE encoder register complete with Itron's 100W water radio transmitter	A/R	$198.90	
Badger's M55 1" meter w/ ADE encoder register complete with Itron's 100W water radio transmitter	A/R	$275.70	
Badger's M120 1 ½" meter w/ ADE encoder register complete with Itron's 100W water radio transmitter	A/R	$478.50	
Badger's M170 2" meter w/ ADE encoder register complete with Itron's 100W water radio transmitter	A/R	$603.85	
*Retrofit price for all of your existing meters in the field / sizes listed above	A/R	$164.75	

Total: $65,000.00

Prices are firm for acceptance within 60 days. All sales are subject to applicable sales tax unless tax exempt certificate is provided. Returned material is subject to restocking charge found on our website. P Card or C.C. purchases subject to 3.5% additional banking/credit card company fees.

Signature **Steve Portlance**

Badger Meter, Inc.

4545 W. Brown Deer Road
Milwaukee, Wisconsin 53223

P.O. Box 245036
Milwaukee, Wisconsin 43224-9536 (414) 355-0400

October 15, 2014

To All Badger Meter Customers in Florida:

Innovative Metering Solutions, Inc. located in the Greater Tampa Bay area was assigned by Badger Meter, Inc. in 2009 to distribute and service its products to all public and private utilities within the State of Florida. Innovative Metering Solutions, Inc. is a stocking distributor and has been given the responsibility for all quotes and contracts for Badger Meter products. Innovative Metering Solutions, Inc. is the sole source provider for all Badger Meter products sold in the State of Florida.

If you have any further questions please contact us at 800-876-3837

Sincerely,
BADGER METER, INC.

Theresa M. Szafranski
Assistant Secretary

cc: Innovative Metering Solutions, Inc.

CITY OF LAKE WORTH
REQUEST FOR A SOLE SOURCE PROCUREMENT

NOTE: This form is to be used for items that are available from only one source and there are no alternates. Forward to the Procurement office sixty (60) days prior to actual need.

Date Submitted: 10/15/2014 Requesting Division/Department: Water Distribution Utilities

Contact person: Judith Love Telephone Number: 561-586-1745

Commodity / Service Request: Purchase of Badger Water Meters W/ADE

Describe the commodity or service and its function:

Meters with ADE encoder registers complete with itron's water radio transmitter

****

Cost of Commodity or Service: $ 144,962.50

Vendor Name: Innovative Metering Solutions Contact Name: Steve Portlance

Address: 2501-A Merchant Ave City/State/Zip: Odessa,FL,33556

Contact Phone Number: 813-205-3722 Contact E-Mail: sportlance@inmetering.com

****

Initial below:

Item(s) are available from only one source and there are no alternates. JL
Initials

****

Attach vendor documentation certifying that the vendor is the only source for commodities or services in question or holds the production, copyrights, trademark, and/or patent to the item.

Check the following statement(s) that apply:

- [x] The vendor holds the exclusive distribution rights for the item in question.
- [x] Vendor documentation attached.

- [x] The item to be purchased is the only item compatible with existing equipment owned by the City.
- [x] Vendor documentation attached.

- [ ] The vendor is the sole provider of the goods or services which have unique characteristics essential to the needs of the program to perform the intended function and no other goods or services will be suitable for use by the City.
- [ ] Vendor documentation attached.

What steps were taken to verify that these features are not available elsewhere?

Other brands/manufacturers were examined. Please list names and phone numbers and explain why they are not suitable for use by the City. Attach additional pages as necessary. Badger Meters are most accurate and have a guarantee life of 10 to 15 years. Meter is compatible with the itron radio presently

Other vendors were contacted. Please list names and phone numbers and explain why they would not meet the needs of the City. Attach additional pages as necessary. N/A

State why this is the only source for the required commodity or service. Attach additional pages as necessary. Compatible with present utilities itrons.

****

I certify that to the best of my knowledge this request is a sole source and the information provided herein is accurate and truthful.

Monica Shaner Digitally signed by Monica Shaner DN: cn=Monica Shaner, o=Lake Worth Utilities, ou, email=mshaner@lakeworth.org, c=US Date: 2014.11.19 13:56:08 -05'00' 11/19/14

Requestor's Signature Date

Department Director's Signature 11/19/14 Date

****

For Procurement Use Only

Date Received in Purchasing: _____ **Purchasing Tracking Number:** _____

Requesting Division/Department: _____

Commodity – Service Request: _____

Purchasing Agent Reviewer: _____

Verified that this request is the only source. ☐ Yes ☐ No

Is Commission approval required? ☐ Yes ☐ No

Was this procurement posted on the Internet? ☐ Yes ☐ No

Comments: _____

Purchasing Agent Reviewer Signature _____ Date _____

Approved ☐ Denied ☐

****

NOTE: Section 838.22 Florida Statutes, it is unlawful (second degree felony) for a public servant with corrupt intent to obtain a benefit for any person (company) or to cause unlawful harm to another, to circumvent a competitive bidding process required by law or rule by using a sole-source contract for commodities or services.

CITY OF LAKE WORTH

7 North Dixie Highway · Lake Worth, Florida 33460 · Phone: 561-586-1600· Fax: 561-586-1750

AGENDA DATE: December 2, 2014, Regular Meeting **DEPARTMENT:** Water and Sewer Utilities

---

EXECUTIVE BRIEF

TITLE:
Task Order 1 with URS Corporation Southern for temporary engineering services

SUMMARY:

The Task Order authorizes URS Corporation Southern to provide temporary professional engineering services for a three month period when the permanent Utility Engineer is not available for a price not to exceed $63,960.

BACKGROUND AND JUSTIFICATION:
The City of Lake Worth approved a Master Services (Standard Professional Consulting Services) Agreement with URS Corporation Southern dated July 1, 2014, awarded per RFQ 12-13-302. This Task Order 1 provides for professional engineering services needed for the Water and Sewer Utility Department while the permanent Utility Engineer is not available. This position is critical for department operations to continue, including site plan review of proposed new developments, review of engineering designs, review of capital projects and developing the department capital budget input for Fiscal Year 2016, as well as additional work designated by the Department Director.

MOTION:
I move to approve/ disapprove Task Order 1 with URS Corporation Southern for temporary engineering services for a price not-to-exceed $63,960.

ATTACHMENT(S):
Fiscal Impact Analysis
Task Order 1

FISCAL IMPACT ANALYSIS

A. Five Year Summary of Fiscal Impact:

Fiscal Years	2015	2016	2017	2018	2019
Capital Expenditures	0	0	0	0	0
Operating Expenditures	$63,960	0	0	0	0
External Revenues	0	0	0	0	0
Program Income	0	0	0	0	0
In-kind Match	0	0	0	0	0
Net Fiscal Impact	$63,960	0	0	0	0
No. of Addn'l Full-Time Employee Positions	0	0	0	0	0

B. Recommended Sources of Funds/Summary of Fiscal Impact:

Utilities
Water/Sewer

Account Number	Account Description	FY2015 Budget	Project #	Pre Exp; Balance	Expenditure for this item	Post Exp; Balance
402-7010-533.31-90	Prof & Contract Services-Other	$288,000	N/A	$249,000	-$63,960	$185,040

C. Department Fiscal Review:
Larry Johnson – Director
Clyde Johnson - Finance Department

URS

CITY OF LAKE WORTH
Scope of Services
Standard Professional Consulting Services Agreement between
City of Lake Worth and URS Corporation Southern dated July 1, 2014
Awarded per RFQ 12-13-312
Task Order - 01

1.0 BACKGROUND

Terms and conditions of the professional services included in this proposal are to be in accordance with the provisions of our Master Services Agreement (Standard Professional Consulting Services Agreement Between the City of Lake Worth and URS Corporation Southern dated July 1, 2014, awarded per RFQ 12-13-312), URS Corporation (URS) is pleased to provide this proposal to continue to assist City of Lake Worth.

2.0 PURPOSE

The City of Lake Worth (City) would like to retain URS to provide engineering services by way of providing a Professional Engineer (Engineer) to the Utility Department to assist with the below mentioned services on a temporary basis. It is understood that this resource will assist the Utility Department Director (Director) with any assistance that he may need through the normal course of operations within the department. The Engineer will work under the direct supervision of the Director and can be of assistance to other City staff under the directive of the Director.

3.0 SCOPE OF SERVICES

Services may include, but not be limited to, the performance of the following in accordance with City requirements, industry specifications, State and Federal regulations:

- Provide capital project management for assigned projects.
- Perform Site Plan reviews.
- Provide and assist with general water utility engineering services.
- Provide direction and monitor City of Lake Worth and third party engineering and CAD design personnel.
- Prepare material requisitions and specifications for the purchase of material for construction projects.
- Perform technical review of vendor material quotations, engineering drawings and manufacturing specifications and procedures.
- Review preliminary construction drawings for neatness, completeness, and accuracy, and approve the drawings for bid and construction.
- Prepare weekly reports on project activity, track project cost and schedule and report results to City of Lake Worth Management.
- Review as-built drawings for code and specification compliance.
- Maintain a professional relationship and familiarity with vendors that supply materials.

- Assist Field Operations and team personnel with engineering problems, code interpretation, and questions.
- Develop construction bid packages, and assist with development of contracts for winning bidder.
- Provides financial oversight, and revise projects to reflect changes in cost forecast exceeding approved tolerances.
- Coordinates with Specialists, Operations (Project Team, City of Lake Worth Managers and Directors), City Control, Planning, Marketing, and customers to reduce or eliminate any outages to customers.
- Maintain a working knowledge of applicable Federal Regulations, Industry Engineering Standards and Standard Operating Procedures, and other industry specifications.
- Provide technical support for right-of-way permitting and acquisition including the preparation and review of road and railroad crossing permit drawings and the review of property plats used to acquire the necessary right of way and temporary construction work space for assigned projects.
- Provide technical support for environmental permitting including the preparation and review of wetland permit drawings, quad maps, right of way arrangement drawings, and construction temporary workspace drawings.
- Represent CITY OF LAKE WORTH in outside business meetings with customers, scope meetings with the general public, and in project permitting meetings before County Commissioners and other state and local government entities.
- Analyzes incoming engineering drawings for encroachments to City of Lake Worth facilities, works to eliminate conflicts and provides initial scope for required relocations of CITY OF LAKE WORTH facilities.

4.0 SITE INFORMATION

City of Lake Worth shall make available to Engineer, any available information relating to projects he or she is delegated (engineering plans, survey data, etc.). Engineer shall immediately be provided with any new information which becomes available, or any change in plans. URS Corporation shall not be liable for any incorrect advice, judgment, or decision based on any inaccurate information furnished to Engineer. URS Corporation will be indemnified against claims, demands, or liability arising out of or contributed by such information.

5.0 COMPENSATION & SCHEDULE

It is understood that the City requires this service for a period of 3 months. URS proposes to perform these services at our contract rate of $123/hr for the specific services to be performed by the Engineer as described above, in accordance with the above mentioned agreement between the City and URS. The services can be performed on a Time and Materials Basis and shall not exceed $63,960.00. Direct expenses will be billed at cost. URS proposes to bill

for these services on a monthly basis with necessary back. If the fees included in this proposal go beyond the amount allocated for this project, URS can prepare a supplemental proposal for continuing services, upon approval by City of Lake Worth.

URS is prepared to begin work immediately on this project upon receipt of your written notice to proceed.

6.0 SUMMARY AND AUTHORIZATION

We greatly appreciate the opportunity to submit this proposal. We are very confident in our ability to complete project tasks on schedule and in a professional manner. We look forward to being of service to City of Lake Worth and to further discuss this proposal and your project requirements.

The receipt of a signed copy of the attached "Authorization" (following page) shall constitute our authorization to proceed. We look forward to working with you.

Please do not hesitate to contact me at (561) 862-1041 with any questions or comments.

Sincerely,

URS CORPORATION SOUTHERN

Panneer Shanmugam, P.E.
Vice President, Principal in Charge

In WITNESS WHEREOF the parties hereto have made and executed this Agreement on the _____ day of _____, 2014.

City of Lake Worth

By: _____
Pam Triola,
Mayor

Attest:
Sufficiency:

_____
Pamela J. Lopez, City Clerk

Approved as to form and legal

By: _____
Christy Goddeau,
City Attorney

_____
Date

URS Corporation Southern

By: _____
Panneer Shanmugam, PE
Vice President

November 10, 2014
Date

STATE OF FLORIDA
COUNTY OF PALM BEACH

The foregoing instrument was acknowledged before me this 10th day of November, 2014, by Panneer Shanmugam, of URS Corporation Southern, a Florida approved corporation, on behalf of the corporation, and who is personally known to me or who has produced the following N/A as identification.

Notary Public:

Shirley Stark

Print Name: SHIRLEY STARK
My commission expires: 3/22/2015

SHIRLEY STARK
Notary Public - State of Florida
My Comm. Expires Mar 22, 2015
Commission # EE 49014

AWARDED AND RANKED FIRMS

LIST OF PROPOSERS (40 Submittals) - RFQ 12-13-302

CCNA Certified - Professional Services Continuing Contracts

RFQ Opening: September 17th 2013 at 3:00PM - Procurement Office at City Hall

No.	Name of Firm	Civil	Enviro	Geo Tech	Mech	Struct Eng	Survey	Trans Traffic	Map GIS	Plan-ning	Archi-tect	Lndsp Archt	Sol/Haz Waste	Coastal	Water Sewer Hydro
1	A. D. A. Engineering, Inc.								3						
2	Bridge Design Assoc, Inc.					1									
3	Chen Moore & Associates								2						
4	CPH, Inc.										3				
5	Craven Thomp & Assoc., Inc.	5					3								
6	Currie Sowards Aguila Arch										1				
7	Dunkelberger Eng & Testing			1											
8	Eco Advisors, LLC		1												
9	Engenuity Group, Inc						2								
10	Gentile, Glas, Holl, O'Mah & Assoc											3			
11	Keith and Schnars							3							
12	Kimley-Horn & Assoc, Inc.	4				2		1				2			4
13	Mathews Consulting, Inc.	2	3		2					2					2
14	Mock Roos	1													1
15	Stanley Consultants, Inc.				3										
16	Stantec Consulting Svcs, Inc.									3					
17	Tierra South Florida, Inc.			2											
18	Urban Design Kilday Studios											1			
19	URS Corporation Southern	3	2		1			2	1	1	2		1	1	3
20	Wantman Group, Inc.						1								5

AGREEMENT

THIS AGREEMENT FOR PROFESSIONAL CONSULTING SERVICES ("Agreement" hereafter) is made on the 1 day of July, 2014, between the **City of Lake Worth**, a Florida municipal corporation located at 7 North Dixie Highway, Lake Worth, Florida 33460 ("City" hereafter) and **URS Corporation Southern,** a foreign corporation authorized to do business in the State of Florida, whose local business address is 7800 Congress Avenue, Suite 200, Boca Raton, FL 33487-1350 ("CONSULTANT" hereafter).

WITNESSETH:

WHEREAS, the City issued Request for Qualifications #12-13-302 for professional consulting services pursuant to Florida's Consultants' Competitive Negotiation Act, Section 287.055, Florida Statutes, for 14 categories of design, engineering, surveying and related services ("RFQ" hereafter) ; and

WHEREAS, the CONSULTANT submitted qualifications in response to the RFQ; and

WHEREAS, the City has selected the CONSULTANT based on its qualifications for certain services; and

WHEREAS, the City and the CONSULTANT desire to enter this Agreement in order to establish terms and conditions for the CONSULTANT's provision of professional services to the City; and

WHEREAS, the City Commission finds entering this Agreement with the CONSULTANT serves a valid public purpose.

NOW, THEREFORE, in consideration of the mutual terms and conditions hereinafter set forth, the sufficiency of which is acknowledged by each party, the City and the CONSULTANT agree as follows:

ARTICLE 1 – GENERAL SCOPE OF SERVICES

The City has awarded the CONSULTANT the non-exclusive right to provide the City with the following types of professional design, engineering, surveying, and related services per the RFQ:

1. Civil Engineering;
2. Environmental Engineering;
3. Mechanical Engineering;
4. Transportation and Traffic;
5. MAPPING and GIS;
6. Planning;
7. Architecture;
8. Solid Waste / Hazardous Waste;
9. Coastal; and,
10. Water, Sewer and Hydro.

ARTICLE 2 - TERM OF AGREEMENT

This Agreement shall become effective upon approval by the City Commission and execution by the Mayor and City Clerk. Unless earlier terminated as provided for herein, the initial term of this Agreement shall be for one (1) year from the date of commencement (the "Initial Term" hereafter) and shall automatically renew each year. Each fiscal year of this Agreement and any renewals will be subject to the availability of funds lawfully appropriated for its purpose by the State of Florida (if applicable) and the City.

ARTICLE 3 – PROVISION OF SERVICES

This non-exclusive Agreement does not guarantee that the City will utilize CONSULTANT in any capacity or for any services hereunder. When the City identifies a need for the CONSULTANT's services, the City will request a proposal from the CONSULTANT to provide the services requested. The CONSULTANT's proposal shall be submitted in the format of the sample task order, attached hereto and incorporated herein as **Exhibit "A"** and shall be based on the fees schedule agreed to by the City, attached hereto and incorporated herein as **Exhibit "B"**. Upon receipt of the CONSULTANT's proposal, the City shall decide in its sole discretion whether to award the task order to the CONSULTANT. If the task order is awarded to the CONSULTANT, the CONSULTANT shall commence the identified services upon receipt of a Notice to Proceed from the City. The City reserves the right to reject any and all proposals submitted by the CONSULTANT.

ARTICLE 4 - COMPENSATION

A. Services: The City shall pay the CONSULTANT the lump sum, not to exceed amount(s) set forth in an approved task order. The CONSULTANT expressly acknowledges and agrees that the total cost to complete all services as set forth in an approved task order shall be a lump sum, not to exceed price subject to any changes as authorized herein, and no additional costs shall be authorized or paid by the City without prior written approval from City's governing body or the City Manager (depending on the City's required level of approval for such costs). In no case shall the CONSULTANT bill the City for any amount not stated in an approved task order unless agreed to in writing by the City's governing body or the City Manager (depending on the City's required level of approval for such costs).

B. Fee Schedule: The fee schedule attached as **Exhibit "B"** shall remain firm for the Initial Term of this Agreement. After the Initial term, the CONSULTANT may request a change to the fee schedule. No changes to the fee schedule shall occur unless approved in writing by the City, which may be by an approved task order.

C. Reimbursable Expenses: The CONSULTANT's reimbursable, out-of-pocket expenses including, but not limited to, travel, per diem and other living expenses, shall be identified in an approved task order. The City shall not be responsible for payment of any such reimbursable, out-of-pocket expenses except as provided for in an approved task order unless authorized in writing by the City's governing body or the City Manager (depending on the City's required level of approval for such costs). Reimbursement for mileage shall only be for travel required outside of Palm Beach County. CONSULTANT shall not be reimbursed for travel within Palm Beach County and all travel shall be proposed and reimbursed pursuant to section 112. 061,

Florida Statutes.

D. Direct Project Expenses: Unless otherwise specifically stated in an approved task order, charges for printing, reproduction, use of computer-aided design equipment, field equipment, and any laboratory analysis performed by the CONSULTANT or its subconsultants or its subcontractors, and the use of the CONSULTANT's and employee's automobiles shall be identified in an approved task order. The City shall not be responsible for payment of any other direct project expenses. All direct project expenses shall be billed at cost to the City and the CONSULTANT shall not mark-up or charge an administrative fee in addition to the direct cost for such expenses.

E. Additional Services: If the City seeks to utilize the CONSULTANT for any additional services (e.g., expert witness services for legal proceedings), the City and CONSULTANT will meet and negotiate a reasonable fee for such services. The negotiated fee shall be approved by the City in the form of a task order prior to said services being provided.

F. Status Report: The CONSULTANT shall complete and submit a technical summary and budgetary status report with each invoice at no additional cost to the City (format to be provided by City for each approved task order).

ARTICLE 5 - TERMS OF PAYMENT

A. Monthly Invoices: The CONSULTANT shall submit invoices once each month to the City for the services performed and the expenses and other charges accounted for under this Agreement pursuant to an approved task order. Separate invoices shall be submitted for each task order. Payment as prescribed herein for services rendered by the CONSULTANT pursuant to an approved task order shall be processed in accordance with the Florida Prompt Payment Act, Section 218.70, Florida Statutes.

B. Sales Tax: The CONSULTANT shall pay all applicable sales taxes; or the City shall provide to the CONSULTANT the tax exemption information, where and if appropriate.

ARTICLE 6 - TERMS OF PERFORMANCE

A. Starting Work: The CONSULTANT will not begin any of the services until authorized in writing by a Notice to Proceed from the City. The time for performance of CONSULTANT's services shall be as set forth in an approved task order.

B. Ownership of Documents: The drawings, specifications, calculations, supporting documents, or other work products which are listed as deliverables by the CONSULTANT to the City shall become the property of the City upon delivery. The CONSULTANT may keep copies or samples thereof and shall have the right to use such drawings, specifications, calculations, supporting documents, or other documents. The City accepts sole responsibility for the reuse of any such documents in a manner other than as initially intended, or for any use of incomplete documents unless prior written approval is obtained from the CONSULTANT.

C. Account Records: The CONSULTANT's accounting records, insofar as they pertain to invoicing the City or for disbursements made from the CONSULTANT's account for services

under this Agreement, shall be open to City's inspection and audit at the CONSULTANT's office upon reasonable prior notice and during normal business hours. Backup documentation for out-of-pocket expenses exceeding Twenty-Five and 00/100 Dollars ($25.00) each shall be available at the CONSULTANT's office. These records will be retained by the CONSULTANT for five (5) years after the calendar year in which the services to which they pertain were rendered or the disbursements were made.

D. Force Majeure: Neither party hereto shall be liable for its failure to perform hereunder due to any circumstances beyond its reasonable control, such as acts of God, wars, riots, national emergencies, sabotage, strikes, labor disputes, accidents, and governmental laws, ordinances, rules, or regulations. The CONSULTANT or City may suspend its performance under this Agreement as a result of a force majeure without being in default of this Agreement, but upon the removal of such force majeure, the CONSULTANT or City shall resume its performance as soon as is reasonably possible.

Upon the CONSULTANT's request, the City shall consider the facts and extent of any failure to perform the services and, if the CONSULTANT'S failure to perform was without its or its subconsultants fault or negligence, the schedule and/or any other affected provision of this Agreement may be revised accordingly, subject to the City's rights to change, terminate, or stop any or all of the services at any time. No extension shall be made for delay occurring more than seven (7) days before a notice of delay or claim therefore is made in writing to the City. In the case of continuing cause of delay, only one (1) notice of delay or claim is necessary.

E. Approval of Changes: The City, through the City Commission or the City Manager (as specifically identified herein) must approve in writing any changes in the scope of services which result in additional costs or expenses to the City, extension of the schedule or which would change the underlying purpose of the Project. Changes include, but are not limited to, issuing additional instructions, requesting additional work, direct omission of work previously ordered, or changes in time of performance.

F. Authorized Representative: Before starting work, the CONSULTANT shall designate an authorized representative acceptable to the City to represent and act for the CONSULTANT and shall inform the City in writing of the name and address of such representative together with a clear definition of the scope of their authority. The CONSULTANT shall keep the City informed of any subsequent changes in the foregoing. The authorized representative of the City shall be the City Manager or his designee.

G. Time of the Essence: Time is of the essence in the performance of this Agreement. The CONSULTANT shall at all times carry out its duties and responsibilities as expeditiously as possible and in accordance with the Project schedule, subject to delays in the schedule which are not the fault of CONSULTANT or its subconsultants.

H. Design/Construction Phase Services: Visits to construction sites and observations made by the CONSULTANT as part of construction phase services, if any, shall not relieve the construction contractor(s) of obligation to conduct comprehensive inspections of the work sufficient to insure conformance with the intent of the construction contract documents, and shall not relieve the construction contractor(s) of full responsibility for all construction means, methods, techniques, sequences, and procedures necessary for coordinating and completing all portions of the work under the construction contract(s) and for

all safety precautions incidental thereto. Safety precautions administered by the CONSULTANT, if any, to protect the CONSULTANT's personnel shall meet those policies enacted by the City. Further, CONSULTANT shall endeavor to make reasonable efforts to guard the City against defects and deficiencies in the services of the construction contractor(s) and to help determine if the provisions of the construction contract documents are being fulfilled. The performance by CONSULTANT of any quality assurance, vendor assurance, project management, construction management or other third party supervisory or advisory services as part of the services shall not constitute an assumption by CONSULTANT of the obligations of City or its other contractors, vendors or suppliers. CONSULTANT shall not control or have charge of, and shall not be responsible for, construction means, methods, techniques, sequences, procedures of construction, health or safety programs, or precautions connected with the Project and shall not manage, supervise, control or have charge of construction. CONSULTANT shall not be responsible for the failure of any contractor, vendor or supplier to comply with their respective contract documents. This paragraph does not, however, release the CONSULTANT from any liability which might be attributable to its negligent acts, errors, or omissions, including but not limited to design, construction phase services, or other services as defined in this Agreement, of the CONSULTANT.

Any cost opinions or estimates provided by CONSULTANT will be on a basis of experience and judgment, but since CONSULTANT has no control over market conditions or bidding procedures, CONSULTANT cannot and does not warrant that bids, ultimate construction cost, or project economics will not vary from such opinions or estimates.

I. Personnel: The CONSULTANT represents that it has, or will secure at its own expense, all necessary personnel required to perform the services under this Agreement. Such personnel shall not be employees of or have any contractual relationship with the City. All of the services required hereunder shall be performed by the CONSULTANT or under its supervision, and all personnel engaged in performing the services shall be fully qualified and, if required, authorized or permitted under state and local law to perform such services. The CONSULTANT shall furnish services in a manner consistent with industry standards and to a level of professional skill generally acceptable in the industry with regard to services of this kind. The CONSULTANT shall comply with all applicable laws in the provision of services under this Agreement. The CONSULTANT agrees that it is fully responsible to the City for the acts and omissions of subconsultants and of persons either directly or indirectly employed by the CONSULTANT. Nothing contained herein shall create any contractual relationship between any subconsultant and the City. All of the CONSULTANT's personnel (and all subconsultants) while on City premises, will comply with all City requirements governing conduct, safety, and security. The City reserves the right to request replacement of any of CONSULTANT's personnel furnished by the CONSULTANT upon written notice by City to CONSULTANT of the cause for such replacement.

THE CONSULTANT AND ITS PERSONNEL SHALL PERFORM THE SERVICES IN ACCORDANCE WITH THE STANDARD OF CARE CUSTOMARY IN THE INDUSTRY BASED ON THE SERVICES AND LOCATION OF THE PROJECT.

J. Conflict of Interest: The CONSULTANT represents that it presently has no interest and shall acquire no interest, either direct or indirect, which would conflict in any manner with the performance of services required hereunder, as provided for in Florida Statutes, Section 112.311. The CONSULTANT further represents that no person having any such conflicting

interest shall be employed for said performance. The CONSULTANT shall promptly notify the City's representative, in writing, of all potential conflicts of interest for any prospective business association, interest or other circumstance which may influence or appear to influence the CONSULTANT'S judgment or quality of services being provided hereunder. Such written notification shall identify the prospective business association, interest or circumstance, the nature of work that the CONSULTANT may undertake and request an opinion of the City as to whether the association, interest or circumstance would, in the opinion of the City, constitute a conflict of interest if entered into by the CONSULTANT. The City agrees to notify the CONSULTANT of its opinion within thirty (30) days of receipt of notification by the CONSULTANT. If, in the opinion of the City, the prospective business association, interest or circumstance would not constitute a conflict of interest by the CONSULTANT, the City shall so state in the notification and the CONSULTANT shall, at its option, enter into said association, interest or circumstance and it shall be deemed not in conflict of interest with respect to services provided to the City by the CONSULTANT under the terms of this Agreement.

K. Status as an Independent Contractor: The status of the CONSULTANT under this Agreement is that of an independent contractor. Nothing in this Agreement shall create or be construed as creating a partnership or joint venture between the City and the CONSULTANT. The CONSULTANT does not have the power or authority to bind the CITY in any promise, contract or representation other than as specifically provided for in this Agreement (if any).

L. News Releases / Publicity: The CONSULTANT shall not make any news releases, publicity releases, or advertisements relating to this Agreement or the task orders without prior written City approval.

M. Nondiscrimination: The CONSULTANT warrants and represents that all of its employees are treated equally during employment without regard to race, color, religion, disability, sex, age, national origin, ancestry, political affiliation, marital status, handicap, or sexual orientation. Further, CONSULTANT shall not discriminate or permit discrimination against any employee or an applicant for employment on the basis of race, color, sex, religion, political affiliation, natural origin, ancestry, marital status, sexual orientation or handicap.

N. Compliance with Laws: The CONSULTANT shall keep fully informed regarding and shall fully and timely comply with all current laws and future laws that may affect those engaged or employed in the performance of this Agreement. Without limiting the generality of the foregoing, the CONSULTANT shall observe all rules and regulations of federal, state, and local officials relating to the subject matter of this Agreement and the provision of all services to the City.

ARTICLE 7 - CITY'S RESPONSIBILITIES

A. Service of Others: The City shall furnish to the CONSULTANT, if required for performance of the Consultant's services, all available data prepared by or the result of the services of others, including without limitation (as may be appropriate): building plans and related drawings, core borings, probings, and subsurface explorations, hydraulic surveys, laboratory tests, and inspections of samples, materials, and equipment, appropriate professional interpretations of all of the foregoing; environmental assessments and impact statements, appropriate professional interpretations of all of the foregoing; property boundary, easement, rights-of-way, topographic and utility surveys; property descriptions; zoning, deed,

and other land use restrictions; and any other special data or consultations relating to the project identified in an approved task order.

B. Examine Work of the Consultant: Within a reasonable time so as not to delay the services of the CONSULTANT, the City shall examine all studies, reports, sketches, drawings, specifications, proposals, and other documents presented by the CONSULTANT, obtain advice of an attorney, insurance counselor, or other consultants, as the City deems appropriate, for such examinations and the rendering, if required, of written opinions pertaining thereto.

Nothing in this Agreement shall be construed or interpreted as requiring CONSULTANT to assume the status of, and City acknowledges that CONSULTANT does not act in the capacity nor assume the status of a "generator," "operator," "transporter," or "arranger" in the treatment, storage, disposal, or transportation of any hazardous substance or waste as those terms are understood within the meaning of the Resource Conservation and Recovery Act (RCRA), Comprehensive Environmental Response, Compensation and Liability Act (CERCLA), or any other similar federal, state, or local law, regulation, or ordinance. City acknowledges further that CONSULTANT has played no part in and assumes no responsibility for generation or creation of any hazardous waste, pollution condition, nuisance, or chemical or industrial disposal problem, if any, which may exist at any project site. The City acknowledges that the discovery of hazardous material at a project site may require CONSULTANT to suspend all or part of the services and notify the City of such material for the City to appropriately address.

ARTICLE 8 – SUSPENSION BY CITY FOR CONVENIENCE

The City may, at any time without cause, order CONSULTANT in writing to suspend, delay or interrupt its services in whole or in part for such period of time as City may determine for City's convenience. Such order shall be by written notice to the CONSULTANT providing at least ten (10) days advance notice unless such order is immediately necessary for the protection of the public health, safety or welfare or for the protection of property.

ARTICLE 9 –TERMINATION

A. Termination for Default by the City: If the City's authorized representative deems that the CONSULTANT is in default for failure to supply adequate personnel, or services of proper quality, or has failed in any other respect to satisfactorily perform the services specified in this Agreement, the City's authorized representative may give written notice to the CONSULTANT specifying the default(s) to be remedied within five (5) days. Such notice shall set forth the basis for any dissatisfaction and suggest corrective measures. If the CONSULTANT does not remedy defaults within five (5) days or commence steps to remedy default to the reasonable satisfaction of the City's authorized representative, the City may do one or all of the following: secure such services from another consultant; withhold any money due or which may become due to the CONSULTANT for such services related to the claimed default(s); and/or, elect to immediately terminate this Agreement. No compensation shall be paid for de-mobilization, take-down, disengagement, wind-down, lost profits or other costs incurred due to termination of this Agreement for default.

B. Termination for Default by the Consultant: This Agreement may be terminated by the CONSULTANT upon thirty (30) days prior written notice to the City in the event of a failure by the City to perform in accordance with the terms of this Agreement through no fault of the

CONSULTANT; provided the City fails to cure same within that thirty (30) day period.

C. Termination Without Cause by City: Notwithstanding the foregoing, the City reserves the right and may elect to terminate this Agreement at any time. At such time, the CONSULTANT shall be compensated only for those services which have been performed to the date of termination. No compensation shall be paid for de-mobilization, take-down, disengagement, wind-down, lost profits or other costs incurred due to termination of this Agreement without cause.

D. Early Termination: If this Agreement is terminated before the expiration of the Initial Term or expiration of any renewal term by either party, the CONSULTANT shall:

1. Stop service on the date and to the extent specified.

2. Terminate and settle all orders and subcontracts relating to the performance of the terminated services.

3. Transfer all work in progress, completed work, and other materials related to the terminated services to the City in the format acceptable to City.

4. Continue and complete all parts of the services that have not been terminated.

ARTICLE 10 –INDEMNIFICATION AND INSURANCE

A. Indemnification: The CONSULTANT agrees to indemnify and hold harmless the City, its commissioners, mayor, officers, employees, agents, and attorneys of, from, and against liabilities, damages, losses and costs, including, but not limited to, reasonable attorney's fees (at all trial and appellate levels), to the extent caused by the negligence, recklessness, or intentionally wrongful conduct of the CONSULTANT, its agents, officers, subconsultants, employees, or anyone else employed or utilized by the CONSULTANT in the performance of this Agreement. The CONSULTANT's liability hereunder shall include all attorney's fees and costs incurred by the City in the enforcement of this indemnification provision. This includes claims made by the employees of the CONSULTANT against the City and the CONSULTANT hereby waives its entitlement, if any, to immunity under Section 440.11, Florida Statutes. The obligations contained in this provision shall survive termination of this Agreement and shall not be limited by the amount of any insurance required to be obtained or maintained under this Agreement.

It is the specific intent of the parties hereto that the foregoing indemnification complies with Section 725.08, Florida Statutes, as amended. CONSULTANT expressly agrees that it will not claim, and waives any claim, that this indemnification violates Section 725.08, Florida Statutes, as amended. Nothing contained in the foregoing indemnification shall be construed as a waiver of any immunity or limitation of liability the City may have under the doctrine of sovereign immunity or Section 768.28, Florida Statutes.

B. Insurance: The CONSULTANT shall not commence any services in connection with this Agreement until it has obtained all of the types of insurance required pursuant to the RFQ and such insurance has been approved by the City. The City shall be named as an additional insured on all insurance except for Worker's Compensation Coverage and Professional

Liability. The CONSULTANT shall require all subconsultants to obtain the same insurance as required herein (without the City named as an additional insured) and no subconsultant shall commence any services under this Agreement until the CONSULTANT has obtained a copy of all subconsultant(s) proofs of insurance. The CONSULTANT shall provide the City with proof of all subconsultant's insurance upon request by the City. The CONSULTANT's insurer shall have a currently valid Certificate of Authority issued by the State of Florida, Department of Insurance authorizing it to write insurance policies in the State of Florida and be conducting business in the State of Florida. Insurers shall have at least a Policy Holders Rating of A-, and Financial Rating of Class IV as identified in the latest issue of "Bests Key Rating Guide" unless otherwise accepted by the City in writing. The CONSULTANT's insurance shall be considered primary and shall not be canceled or materially changed without at least thirty (30) days' notice to the City, unless cancelled due to non-payment of the premium. If cancelled due to non-payment of the premium, the CONSULTANT shall promptly provide notice of the same to the City and provide proof of all new insurance to the City. The City's insurance, if any, shall be considered excess, as may be applicable to claims which arise out of indemnifications, insurance, certificates of insurance and any additional insurance provisions of this Agreement. The CONSULTANT shall procure and maintain all insurance listed above for the life of this Agreement. Receipt of certificates or other documentation of insurance or policies or copies of policies by the City or by any of its representatives which indicate less coverage than required by this Agreement does not constitute a waiver of the CONSULTANT's obligations to fulfill the requirements of this Article.

C. Loss Deductible: The City shall be exempt from, and in no way liable for, any sums of money which may represent a deductible in any insurance policy. The payment of deductibles shall be the sole responsibility of the CONSULTANT or its subconsultants.

D. Waiver of Subrogation: The City and the CONSULTANT waive all rights against each other for damages caused by perils covered by insurance provided under this Agreement to the extent covered by such insurance, except such rights as they may have to the proceeds of such insurance held by the City and the CONSULTANT as trustees. The CONSULTANT shall require similar waivers from all subconsultants. The City and the CONSULTANT waive all rights against each other for loss or damage to any equipment used in connection with performance under this Agreement and covered by any property insurance. The CONSULTANT shall require similar waivers from all subconsultants. If the insurance policies referred to in this article require an endorsement to provide for continued coverage where there is a waiver of subrogation, the owner of such policies will cause them to be so endorsed; failure to obtain endorsement nullifies the waiver of subrogation.

ARTICLE 11 - SUCCESSORS AND ASSIGNS

The City and CONSULTANT each binds themselves and their partners, successors, executors, administrators, and assigns to the other party of this Agreement and to the partners, successors, executors, administrators, and assignees of such other party in respect to all covenants of this Agreement. The CONSULTANT shall not assign, sublet, or transfer any interest in this Agreement without the prior written consent of the City, which the City may withhold in its sole and absolute discretion. Nothing herein shall be construed as creating any personal liability on the part of any elected official, officer, employee or agent of the City, nor shall it be construed as giving any rights or benefits hereunder to any third party other than the City and CONSULTANT.

ARTICLE 12 - REMEDIES

A. Claims, Counter-Claims, Disputes, Etc.: Prior to the filing of any claim, proceeding or litigation related to the Agreement, all claims, counter-claims, disputes, and other matters in questions between the CONSULTANT and the City will be first reviewed by authorized representatives of both parties for a recommended solution. If no solution or resolution is forthcoming, either party may pursue its claim, proceeding or litigation.

B. Governing Law and Venue: This Agreement shall be governed by and construed and interpreted in accordance with the laws of the State of Florida. Each of the parties hereto (a) irrevocably submits itself to the exclusive jurisdiction of the Fifteenth Judicial Circuit Court, in and for Palm Beach County, Florida for state actions, and the jurisdiction of the United States District Court for the Southern District of Florida, West Palm Beach Division for federal actions, for the purposes of any suit, action or other proceeding arising out of, or relating to, this Agreement; (b) waives and agrees not to assert against any party hereto, by way of motion, as a defense or otherwise in any suit, action or other proceeding, (i) any claim that it is not personally subject to the jurisdiction of the above-named courts for any reason whatsoever, and (ii) to the extent permitted by applicable law, any claim that such suit, action or proceeding by any party hereto is brought in an inconvenient forum, or that the venue of such suit, action or proceeding is improper or that this Agreement or the subject matter hereof may not be enforced in or by such courts.

ARTICLE 13 – NOTICE

A. Any notice required to be given under this Agreement shall be given in writing and delivered by hand or through the instrumentality of certified mail of the United States Postal Service (return receipt requested) or other nationally recognized overnight courier service, such as Federal Express.

B. Unless otherwise notified in writing of a new address, all notices shall be made to each party at the below listed addresses. Any party shall have the right, from time to time, to change the address to which notices shall be sent by giving the other party at least ten (10) days prior notice of the address change.

All notices to the CONSULTANT shall be sent to:

URS Corporation Southern
7800 Congress Avenue, Suite 200
Boca Raton, FL 33487-1350

All notices to the City shall be sent to:

Office of the City Manager
c/o City of Lake Worth
7 North Dixie Highway
Lake Worth, FL 33460.

ARTICLE 14 – NO CONTINGENT FEES

The CONSULTANT warrants that it has not employed or retained any company or person, other than a bona fide employee working solely for the CONSULTANT to solicit or secure this Agreement and that it has not paid or agreed to pay any person, company, corporation, individual, or firm, other than a bona fide employee working solely for the CONSULTANT any fee, commission, percentage, gift, or other consideration contingent upon or resulting from the award or making of this Agreement. For the breach or violation of this provision, the City shall have the right to terminate the Agreement without liability and at its discretion, to deduct from the contract price, or otherwise recover, the full amount of such fee, commission, percentage, gift, or consideration.

ARTICLE 15 – TRUTH-IN-NEGOTIATION CERTIFICATE

The signing of this Agreement by the CONSULTANT shall act as the execution of a truth-in-negotiation certificate stating that wage rates and other factual unit costs supporting the compensation of this Agreement are accurate, complete, and current at the time of contracting. The lump sum not to exceed price and any additions thereto shall be adjusted to exclude any significant sums by which the City determines the lump sum not to exceed price was increased due to inaccurate, incomplete, or non-current wage rates and other factual unit costs. All such contract adjustments shall be made within one (1) year following the end of this Agreement.

ARTICLE 16 – PUBLIC ENTITIES CRIMES

As provided in Sections 287.132 and 289.133, Florida Statutes, by entering into this Agreement or performing any service in furtherance thereof, the CONSULTANT certifies that it, its affiliates, suppliers, subconsultants and contractors who will perform under the terms and conditions of this Agreement have not been placed on the convicted vendor list maintained by the Florida Department of Management Services within the 36 months immediately preceding the date of this Agreement. This notice is required by Section 287.133, Florida Statutes.

ARTICLE 17 - NONEXCLUSIVE AGREEMENT

This Agreement is not intended to be and shall not be construed as an exclusive agreement, and the City may employ additional or other professional consulting firms to perform services contemplated by this Agreement without liability to the City.

ARTICLE 18 - MISCELLANEOUS

A. Validity, Severability and Reformation: The validity, interpretation, construction, and effect of this Agreement shall be in accordance with and be governed by the laws of the State of Florida. Any provision or part of this Agreement held to be void or unenforceable under any law shall be deemed stricken and all remaining provisions shall continue to be valid and binding upon the parties. The parties agree that this Agreement shall be reformed to replace such stricken provision or part thereof with a valid and enforceable provision which comes as close as possible to expressing the intention of the stricken provision.

B. Headings: The headings of the sections of this Agreement and capitalizations are for the purpose of convenience only and shall not be deemed to expand or limit the provisions

contained in such sections.

C. Entire Agreement and Conflicts: This Agreement consists of the terms and conditions herein; the exhibits hereto; and, the RFQ which is incorporated by reference herein. Each approved task order shall be considered an amendment to this Agreement. To the extent that there exists a conflict between this Agreement and the remaining documents, the terms and conditions of an approved task order shall prevail over this Agreement with the terms and conditions of this Agreement taking preference over the RFQ and the exhibits. Wherever possible, the provisions of such documents shall be construed in such a manner as to avoid conflicts between provisions of the various documents.

D. Waiver: No waiver of any of the terms or conditions of this Agreement shall be effective unless in writing and executed by the party to be changed therewith. No waiver of any condition or of the breach of any term, covenant, representation, warranty or other provision hereof shall be deemed to be construed as a further or continuing waiver of any such condition or breach or a waiver of any other condition or of any breach of any other term, covenant, representation, warranty or other provision contained in this Agreement.

E. Waiver of Jury Trial: To encourage prompt and equitable resolution of any litigation, each party hereby waives its rights to a trial by jury in any litigation, claim or proceeding related to this Agreement.

F. Counterparts: This Agreement may be executed in two or more counterparts, each of which shall be deemed to be an original, but each of which together shall constitute one and the same instrument.

G. Preparation: This Agreement shall not be construed more strongly against either party regardless of who was more responsible for its preparation.

ARTICLE 19 - PALM BEACH COUNTY INSPECTOR GENERAL

In accordance with Palm Beach County ordinance number 2011-009, the CONSULTANT acknowledges that this Agreement may be subject to investigation and/or audit by the Palm Beach County Inspector General. The CONSULTANT has reviewed Palm Beach County ordinance number 2011-009 and is aware of its rights and/or obligations under such ordinance.

ARTICLE 20 - PUBLIC RECORDS

The CONSULTANT shall comply with Florida's Public Records Laws, and specifically agrees to:

A. Keep and maintain public records that ordinarily and necessarily would be required by the City in order to perform the services.

B. Provide the public with access to public records on the same terms and conditions that the City would provide the records and at a cost that does not exceed the cost provided in this Chapter 119, Florida Statutes, or as otherwise provided by law.

C. Ensure that public records that are exempt or confidential and exempt from public records disclosure requirements are not disclosed except as authorized by law.

D. Meet all requirements for retaining public records and transfer, at no cost, to the City all public records in possession of the CONSULTANT upon termination of the Agreement and destroy any duplicate public records that are exempt or confidential and exempt from public records disclosure requirements. All records stored electronically must be provided to the City in a format that is compatible with the information technology systems of the City.

ARTICLE 21 - REPRESENTATIONS/BINDING AUTHORITY

CONSULTANT has full power, authority and legal right to execute and deliver this Agreement and perform all of its obligations under this Agreement. By signing this Agreement, CONSULTANT hereby represents to the City that it has the authority and full legal power to execute this Agreement and any and all documents necessary to effectuate and implement the terms of this Agreement on behalf of the party for whom he or she is signing and to bind and obligate such party with respect to all provisions contained in this Agreement.

[THE REMAINDER OF THIS PAGE IS INTENTIONALLY LEFT BLANK]

IN WITNESS WHEREOF, the parties hereto have made and executed this Agreement for Professional Consulting Services on the day and date first above written:

CITY OF LAKE WORTH, FLORIDA

By: _____
Pam Triolo, Mayor

ATTEST:

Pamela J. Lopez, City Clerk

Approved as to form and legal sufficiency:

_____ FOR
Glen J. Torcivia, City Attorney

CONSULTANT: **URS Corporation Southern**

By: _____

Print Name: Panneer Shanmugam, PE

Title: Vice-President

STATE OF FLORIDA)
COUNTY OF PALM BEACH)

The foregoing instrument was acknowledged before me this 30th day of May, 2014 by Panneer Shanmugam, as Vice-President (title), of URS Corporation Southern, a corporation authorized to do business in the State of Florida, and who is personally known to me or who has produced the following N/A as identification.

Notary Public
_____
Print Name: SHIRLEY STARK
My commission expires: March 22, 2015

SHIRLEY STARK
Notary Public - State of Florida
My Comm. Expires Mar 22, 2015
Commission # EE 49014

Exhibit A: Sample Task Order
Exhibit B: Fee Schedule

EXHIBIT "A"

SAMPLE TASK ORDER

PROFESSIONAL CONSULTING SERVICES
FOR
_____ Project

THIS TASK ORDER FOR PROFESSIONAL CONSULTING SERVICES ("Task Order" hereafter) is made on the ____ day of _____, 2014, between the **City of Lake Worth**, a Florida municipal corporation located at 7 North Dixie Highway, Lake Worth, Florida 33460 ("City" hereafter) and _____, a Florida corporation, whose local business address is _____ ("Consultant" hereafter).

1.0 Project Description:

The City desires the Consultant to provide those services as identified herein for the Project. The Project is generally described as: _____ _____.

2.0 Scope

Under this Task Order, the Consultant will provide the City of Lake Worth _____ Department with plans, specifications and construction inspection services for the Project. **Attached hereto and incorporated herein is the Consultant's Scope of Services**.

3.0 Schedule

The services to be provided under this Task Order shall be completed within _____ calendar days from the City's approval of this Task Order and issuance of a Notice to Proceed.

4.0 Compensation

This Task Order is issued for a lump sum, not to exceed amount of $_____. The attached Scope of Services identifies all costs and expenses included in the lump sum, not to exceed amount.

5.0 Project Manager

The Project Manager for the Consultant is _____, phone:_____; email: _____; and, the Project Manager for the City is _____, phone:_____;

email:_____.

6.0 Progress Meetings

The Consultant shall schedule periodic progress review meetings with the City Project Manager as necessary but every 30 days as a minimum.

7.0 Authorization

This Task Order is issued in compliance with the Consultants' Competition Negotiation Act, section 287.055, Florida Statutes, and pursuant to the Agreement for Professional Consultant Services between the City of Lake Worth and the Consultant, _____, dated _____, 2014 ("Agreement" hereafter).

IN WITNESS WHEREOF, the parties hereto have made and executed this Task Order on day set forth above.

CITY OF LAKE WORTH

By:_____

ATTEST:

_____
City Clerk

Approved as to form and legal sufficiency:

_____
City Attorney

Consultant:_____

By:_____

Print Name:_____
Print Title:_____

[Corporate Seal]

NOTARY BLOCK

EXHIBIT "B"

CONSULTANT'S FEE SCHEDULE

2014 URS Schedule of Fees and Charges
Boca Raton / Jacksonville

The following describes the basis for compensation for services performed during the current fiscal year. This Schedule of Fees and Charges will be adjusted annually on January 1 of each subsequent year to reflect merit and economic salary increases, and changes in the expected level and mode of operations for the current year. The new schedule of Fees and Charges will apply to existing and new assignments.

Responsibility Level	Hourly Rate ($)
Administrative Assistant	63
CADD Supervisor	121
CADD Technician	58
Cert Ind Hygienist/Hlth & Sfty	158
Civil Designer	95
Civil Engineer	84
Contract Administrator	89
Environmental Designer/Tech	89
Environmental Engineer	84
Environmental Scientist	84
Environmental Technician	63
Geologist	89
Grad Environmental Scientist	79
Grad Struct/Facility/Found En	79
Graduate Biologist	79
Graduate Electrical Engineer	79
Inspector/Field Tech	68
IT Coordinator / Operator	68
Junior Field Tech/Inspector	58
Marine Engineer	84
Prin Struct/Facility/Found Engineer	195
Principal Civil Engineer	195
Principal Geologist	176
Proj Civil - Geotechnical Eng	97
Project Landscape Arch/Designed	95
Project Administrator	63
Project Electrical Engineer	97
Project Environ Scientist	95
Project Environmental Engineer	97
Project Geologist	95
Project Hazardous Waste Spec	95
Project Mechanical Engineer	97
Project Manager	145
Quality Assurance Manager	158
Senior Architect/Designer	156
Senior CADD Designer	89
Senior Civil Engineer	142
Senior Environmental Engineer	142
Senior Field Tech/Inspector	85
Senior Geologist	131
Senior Electrical/Mechanical Engineer	142
Specialist Consultant*	235
Sr. Resident Eng/Chief Constr	158
Sr. Struct/Facility/Found Eng	142

This fee schedule contains confidential business information and is not to be copied or distributed for any purpose other than the use intended in this contract or proposal.

STANDARD PROFESSIONAL CONSULTING SERVICES

AGREEMENT BETWEEN

THE CITY OF LAKE WORTH

AND

URS CORPORATION

Awarded per RFQ 12-13-302

CITY OF LAKE WORTH

7 North Dixie Highway · Lake Worth, Florida 33460 · Phone: 561-586-1600· Fax: 561-586-1750

AGENDA DATE: December 2, 2014, Regular Meeting **DEPARTMENT:** Public Services

---

EXECUTIVE BRIEF

TITLE:
Variance agreement with Robert A. Lepa to allow brick pavers on a driveway and City right-of-way at 728 North Lakeside Drive

SUMMARY:
The Agreement will allow for the encroachment of brick pavers into the City right-of-way and protect the City from any future liability.

BACKGROUND AND JUSTIFICATION:
Per the City Code, Section 19-26(d), all driveway approaches and walkways are to be constructed of six inch concrete unless a variance stating otherwise is allowed by the Building Official. Based on the requirements, Public Services Staff does not recommend approval of pavers because it is not financially beneficial to the City due to the required maintenance over the life of the paver section.

On November 7, 2014 the Building Official authorized the variance; however, in order to protect the City from any liability (or if the City needs to remove the pavers for future work or any other reason), a variance agreement will hold the City harmless and not require replacement of the pavers in the right-of-way. Upon completion of any improvements in the right-of-way, the City would then perform a repair with concrete or the pavers could be reinstalled at the owner's expense.

MOTION:
I move to approve/not approve a Variance Agreement with Robert A. Lepa.

ATTACHMENT(S):
Fiscal Impact Analysis – not applicable
Agreement

Prepared by: City Attorney
Return to: City of Lake Worth
7 North Dixie Highway
Lake Worth, FL 33460-3787

VARIANCE AGREEMENT

THIS VARIANCE AGREEMENT (hereafter "Agreement") is made and entered into this _____ day of _____, 2014, by and between Property Owner Robert A. Lepa, (hereafter the "OWNER") and the CITY OF LAKE WORTH, a municipal corporation under the laws of the State of Florida (hereafter "CITY").

WITNESSETH:

WHEREAS, the OWNER is a fee simple owner of the property legally described as follows:

Lot 7, Block 422, Townsite of Lucerne (n/k/a Lake Worth), according to the Plat recorded in Plat Book 2, Page(s) 29, as recorded in the Public Records of Palm Beach County, Florida (P.C.N. 38-43-44-21-15-422-0070)

more commonly known as 728 North Lakeside Drive, Lake Worth, Florida (the "Property" hereafter); and

WHEREAS, the OWNER is seeking to remodel his existing driveway and to construct a driveway consisting of interlocking brick pavers, a portion of which encroaches on the CITY's public right of way (hereinafter referred to as the "Driveway"); and

WHEREAS, the Driveway proposed by the OWNER is such that part of the Driveway is to be constructed on OWNER'S property and part of the Driveway is to be constructed upon or located in the CITY's right of way; and

WHEREAS, a copy of the Right of Way/Utility Permit Application for the Property with a survey of the existing and proposed driveway and explanation of the construction of the Driveway is attached hereto as Exhibit A and incorporated by reference; and

WHEREAS, a portion the OWNER'S Driveway is located in the CITY's right of way and does not meet the minimum requirements of Section 19-26(d) of the CITY's Code of Ordinances which require all driveway approaches and walkways to be constructed of 6-inch thick concrete; and

WHEREAS, the OWNER is seeking a variance to allow the use of brick pavers with compacted base rock as paving material for the portion of the Driveway which is located in the CITY's right of way rather than the 6-inch thick concrete required by the City Code; and

WHEREAS, the OWNER and CITY desire to enter into this Agreement in order to memorialize and document the CITY'S authorization of a variance from Section 19-26(d) of the Code, as well as to set parameters for the removal, relocation and/or restoration of the Driveway if reasonably necessary and set forth indemnification and insurance requirements for said Driveway; and

WHEREAS, the CITY finds that the OWNER'S Driveway is not unduly injurious to contiguous property or the surrounding neighborhood or otherwise detrimental to the public welfare; and

NOW THEREFORE, for and in consideration of the mutual covenants and promises hereinafter contained, the sufficiency of which is acknowledged by the CITY and OWNER, the CITY and OWNER agree to the granting of a variance based on the following:

1. The above "Whereas" clauses are true and correct and incorporated into this Agreement as if set forth herein.

2. The CITY hereby grants approval for the OWNER to construct and maintain the Driveway at the Property as set forth in Exhibit A, which consists of a brick paver driveway with base rock installed by a licensed contractor, but expressly reserves the right to require the OWNER to remove and/or reconstruct the Driveway, or restore the portion of the Driveway located within the CITY's right of way to its original condition for any reasonable purpose, which the reasonableness of such purpose shall be determined in the CITY's sole discretion.

3. The OWNER acknowledges and agrees that he will act entirely at his own peril in constructing the Driveway and the OWNER shall have no claim, recourse or other grounds for relief against CITY as a result of any damages arising out of, or related to, the Driveway and/or its removal, reconstruction or restoration.

4. The OWNER agrees that he shall maintain that portion of the Driveway encroaching on CITY's right of way and abate all hazards associated with the Driveway in a manner satisfactory to the CITY and, if he fails to do so, the CITY shall have the right to: (a) terminate this Agreement and have the Driveway located in the CITY's right of way removed; and/or (b) maintain that portion of the Driveway in the CITY's right of

way and the cost for such maintenance shall be assessed against the OWNER and shall become a lien on the Property if not paid within thirty (30) days after such assessment.

5. The OWNER further agrees that he shall remove and/or reconstruct, at his own expense, the Driveway from the CITY's right of way within thirty (30) days written notice from the CITY to remove, reconstruct and/or restore the Driveway.

6. The OWNER shall indemnify, defend and hold harmless, to the maximum extent permitted by law, the CITY and its officers, agents, employees and representatives, from and against any and all liability, suit, actions, proceedings, judgments, claims, losses, liens, damages, injuries (whether in contract or in tort, including personal injury, accidental death or property damage, and regardless, of whether the allegations are false, fraudulent or groundless), costs and expenses (including attorney's fees in all litigation, arbitration, mediation and appeals) to the extent arising out of or related to the Driveway and this Agreement including without limitation the CITY's grant or revocation of the variance for the Driveway, the use of alternative construction materials and any negligence in the construction or maintenance of the Driveway. This indemnification is separate and apart from, and in no way limited by, any insurance provided by OWNER pursuant to this Agreement or otherwise. This section shall survive the termination of this Agreement with respect to any damage, injury or death occurring prior to such termination.

7. The OWNER and the CITY mutually agree that this Agreement so materially touches and concerns the Property that this Agreement is intended to and does run with the land and shall bind the OWNER, the OWNER'S heirs, successors and assigns and anyone with any interest whatsoever in the Property and that this Agreement shall be recorded in the Public Records of Palm Beach County, Florida.

8. The CITY shall provide all notices required under this Agreement to the OWNER via hand-delivery or certified mail (return receipt requested) to the Property's physical address as set forth above. Said notice shall be effective on the date of delivery.

9. This Agreement supersedes any and all other Agreements, either oral or in writing, between the parties hereto with respect to the subject matter hereof, and no other Agreement, statement, or promise relating to the subject matter of this Agreement which is not contained herein shall be valid or binding.

10. WAIVER OF TRIAL BY JURY: TO ENCOURAGE PROMPT AND EQUITABLE RESOLUTION OF ANY LITIGATION, EACH PARTY HEREBY WAIVES ITS RIGHTS TO A TRIAL BY JURY IN ANY LITIGATION RELATED TO THIS AGREEMENT.

11. The validity of this Agreement and of any of its terms or provisions, as well as the rights and duties of the parties hereunder, shall be governed by the laws of the State of Florida and venue shall be in Palm Beach County, Florida. No remedy herein conferred upon any party is intended to be exclusive of any other remedy, and each and every such remedy shall be cumulative and shall be in addition to every other remedy given hereunder or now or hereafter existing at law or in equity or by statute or otherwise. No single or partial exercise by any party of any right, power, or remedy hereunder shall preclude any other or further exercise thereof.

12. This Agreement shall not be construed more strongly against either party regardless of who was more responsible for its preparation.

13. Except as may be required in paragraph 6 above, all parties shall be responsible for their own attorneys' fees, court costs and expenses if any legal action or other proceeding is brought for any dispute, disagreement, or issue of construction or interpretation arising hereunder whether relating to the Agreement's execution, validity, the obligations provided therein, or performance of this Agreement, or because of an alleged breach, default or misrepresentation in connection with any provisions of this Agreement.

REMAINDER OF THIS PAGE INTENTIONALLY LEFT BLANK
SIGNATURE PAGE FOLLOWS

IN WITNESS WHEREOF the parties hereto have made and executed this Variance Agreement on the day and year first above written.

CITY OF LAKE WORTH

Reviewed and approved for execution:

By: _____
Luis Martinez, Building Official

Approved as to form and legal sufficiency:

By: _____ FOR
Glen Torcivia, City Attorney

PROPERTY OWNER

_____
Signature of Witness

_____
Robert A. Lepa, Owner

Printed Name: Melissa Mills

STATE OF FLORIDA)
COUNTY OF PALM BEACH)

The foregoing instrument was acknowledged before me this 28 day of Oct, 2014 by Robert A. Lepa, who is [X] personally known to me] or who has produced [☐ as identification.

Notary _____
Printed Name of Notary Kelley West

KELLEY WEST
Commission # FF 091272
Expires February 10, 2018
Bonded Thru Troy Fain Insurance 800-385-7019

EXHIBIT A – COPY OF SURVEY ATTACHED

R.B. BRENNAN SURVEYING

BOUNDARY SURVEY

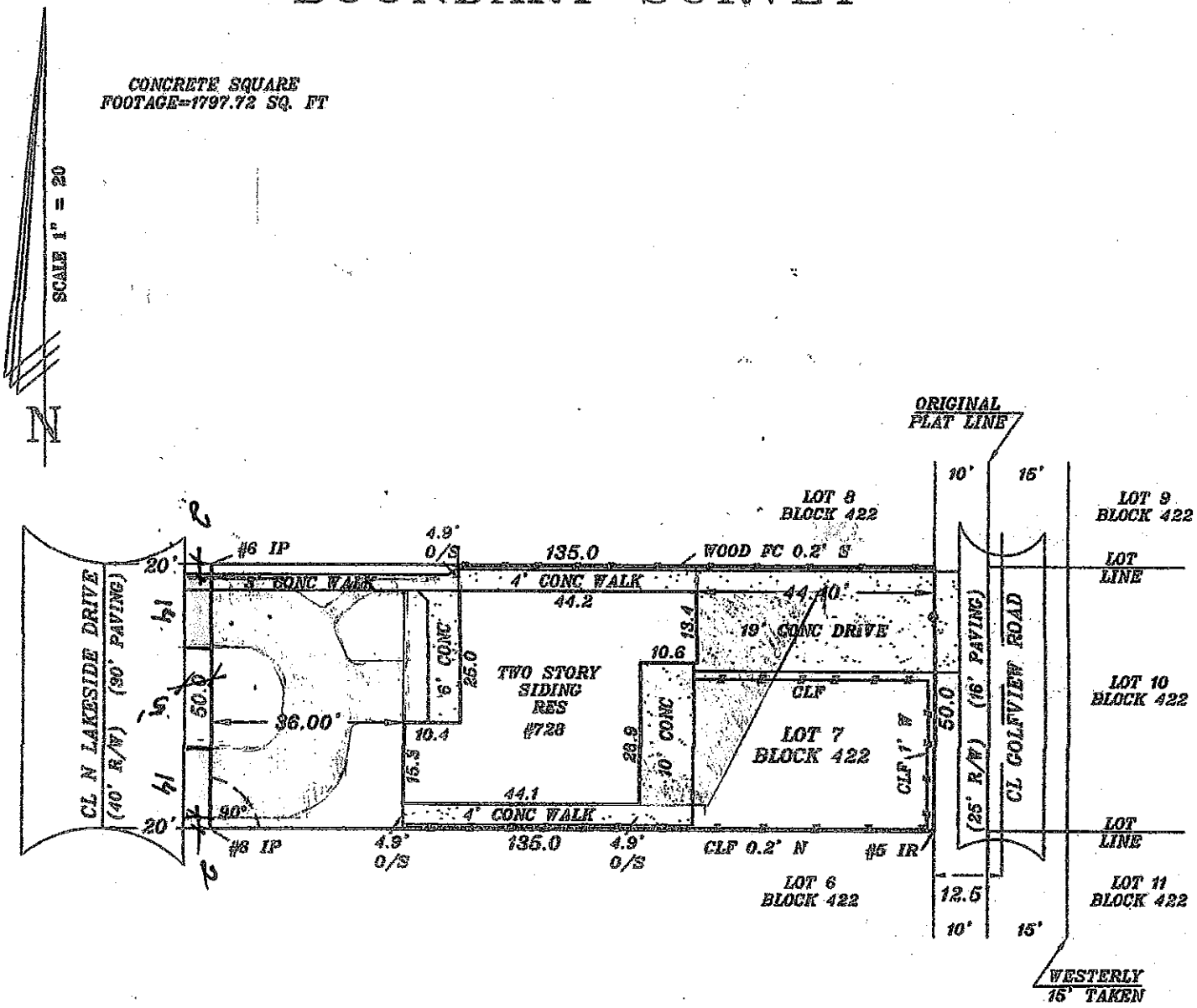

CITY OF LAKE WORTH

7 North Dixie Highway · Lake Worth, Florida 33460 · Phone: 561-586-1600· Fax: 561-586-1750

AGENDA DATE: December 2, 2014, Regular Meeting **DEPARTMENT:** Public Services

---

EXECUTIVE BRIEF

TITLE:
Variance agreement with Iran Guzman to allow brick pavers on a driveway and City right-of-way at 1752 22nd Avenue North

SUMMARY:
The Agreement will allow for the encroachment of brick pavers into the City right-of-way and protect the City from any future liability.

BACKGROUND AND JUSTIFICATION:
Per the City Code, Section 19-26(d), all driveway approaches and walkways are to be constructed of six inch concrete unless a variance stating otherwise is allowed by the Building Official. Based on the requirements, Public Services Staff does not recommend approval of pavers because it is not financially beneficial to the City due to the required maintenance over the life of the paver section.

On October 31, 2014, the Building Official authorized the variance; however, in order to protect the City from any liability (or if the City needs to remove the pavers for future work or any other reason), a variance agreement will hold the City harmless and not require replacement of the pavers in the right-of-way. Upon completion of any improvements in the right-of-way, the City would then perform a repair with concrete or the pavers could be reinstalled at the owner's expense.

MOTION:
I move to approve/not approve a Variance Agreement with Iran Guzman.

ATTACHMENT(S):
Fiscal Impact Analysis – not applicable
Agreement

Prepared by: City Attorney
Return to: City of Lake Worth
7 North Dixie Highway
Lake Worth, FL 33460-3787

VARIANCE AGREEMENT

THIS VARIANCE AGREEMENT (hereafter "Agreement") is made and entered into this 29th day of October, 2014, by and between Property Owner Iran Guzman, (hereafter the "OWNER") and the CITY OF LAKE WORTH, a municipal corporation under the laws of the State of Florida (hereafter "CITY").

WITNESSETH:

WHEREAS, the OWNER is a fee simple owner of the property legally described as follows:

Lot 129, of VERNON HEIGHTS, according to the Plat thereof, as recorded in Plat Book 24, Page(s) 200, of the Public Records of Palm Beach County, Florida (P.C.N. 38-43-44-16-10-000-1290)

more commonly known as 1752 22nd Avenue North, Lake Worth, Florida (the "Property" hereafter); and

WHEREAS, the OWNER is seeking to remodel his existing driveway and to construct new sidewalk and a driveway consisting of interlocking brick pavers, a portion of which encroaches on the CITY's public right of way (hereinafter referred to as the "Driveway"); and

WHEREAS, the Driveway proposed by the OWNER is such that part of the Driveway is to be constructed on OWNER'S property and part of the Driveway is to be constructed upon or located in the CITY's right of way; and

WHEREAS, a copy of the Right of Way/Utility Permit Application for the Property with a survey of the existing and proposed driveway, new sidewalk and an explanation of the construction of the Driveway is attached hereto as Exhibit A and incorporated by reference; and

WHEREAS, a portion the OWNER'S Driveway is located in the CITY's right of way and does not meet the minimum requirements of Section 19-26(d) of the CITY's Code of Ordinances which require all driveway approaches and walkways to be constructed of 6-inch thick concrete; and

WHEREAS, the OWNER is seeking a variance to allow the use of brick pavers with compacted base rock as paving material for the portion of the Driveway which is located in the CITY's right of way rather than the 6-inch thick concrete required by the City Code; and

WHEREAS, the OWNER and CITY desire to enter into this Agreement in order to memorialize and document the CITY'S authorization of a variance from Section 19-26(d) of the Code, as well as to set parameters for the removal, relocation and/or restoration of the Driveway if reasonably necessary and set forth indemnification and insurance requirements for said Driveway; and

WHEREAS, the CITY finds that the OWNER'S Driveway is not unduly injurious to contiguous property or the surrounding neighborhood or otherwise detrimental to the public welfare; and

NOW THEREFORE, for and in consideration of the mutual covenants and promises hereinafter contained, the sufficiency of which is acknowledged by the CITY and OWNER, the CITY and OWNER agree to the granting of a variance based on the following:

1. The above "Whereas" clauses are true and correct and incorporated into this Agreement as if set forth herein.

2. The CITY hereby grants approval for the OWNER to construct and maintain the Driveway at the Property as set forth in Exhibit A, which consists of a brick paver driveway with base rock installed by a licensed contractor, but expressly reserves the right to require the OWNER to remove and/or reconstruct the Driveway, or restore the portion of the Driveway located within the CITY's right of way to its original condition for any reasonable purpose, which the reasonableness of such purpose shall be determined in the CITY's sole discretion.

3. The OWNER acknowledges and agrees that he will act entirely at his own peril in constructing the Driveway and the OWNER shall have no claim, recourse or other grounds for relief against CITY as a result of any damages arising out of, or related to, the Driveway and/or its removal, reconstruction or restoration.

4. The OWNER agrees that he shall maintain that portion of the Driveway encroaching on CITY's right of way and abate all hazards associated with the Driveway in a manner satisfactory to the CITY and, if he fails to do so, the CITY shall have the right to: (a) terminate this Agreement and have the Driveway located in the CITY's right of way removed; and/or (b) maintain that portion of the Driveway in the CITY's right of way and the cost for such maintenance shall be assessed against the OWNER and

shall become a lien on the Property if not paid within thirty (30) days after such assessment.

5. The OWNER further agrees that he shall remove and/or reconstruct, at his own expense, the Driveway from the CITY's right of way within thirty (30) days written notice from the CITY to remove, reconstruct and/or restore the Driveway.

6. The OWNER shall indemnify, defend and hold harmless, to the maximum extent permitted by law, the CITY and its officers, agents, employees and representatives, from and against any and all liability, suit, actions, proceedings, judgments, claims, losses, liens, damages, injuries (whether in contract or in tort, including personal injury, accidental death or property damage, and regardless, of whether the allegations are false, fraudulent or groundless), costs and expenses (including attorney's fees in all litigation, arbitration, mediation and appeals) to the extent arising out of or related to the Driveway and this Agreement including without limitation the CITY's grant or revocation of the variance for the Driveway, the use of alternative construction materials and any negligence in the construction or maintenance of the Driveway. This indemnification is separate and apart from, and in no way limited by, any insurance provided by OWNER pursuant to this Agreement or otherwise. This section shall survive the termination of this Agreement with respect to any damage, injury or death occurring prior to such termination.

7. The OWNER and the CITY mutually agree that this Agreement so materially touches and concerns the Property that this Agreement is intended to and does run with the land and shall bind the OWNER, the OWNER'S heirs, successors and assigns and anyone with any interest whatsoever in the Property and that this Agreement shall be recorded in the Public Records of Palm Beach County, Florida.

8. The CITY shall provide all notices required under this Agreement to the OWNER via hand-delivery or certified mail (return receipt requested) to the Property's physical address as set forth above. Said notice shall be effective on the date of delivery.

9. This Agreement supersedes any and all other Agreements, either oral or in writing, between the parties hereto with respect to the subject matter hereof, and no other Agreement, statement, or promise relating to the subject matter of this Agreement which is not contained herein shall be valid or binding.

10. WAIVER OF TRIAL BY JURY: TO ENCOURAGE PROMPT AND EQUITABLE RESOLUTION OF ANY LITIGATION, EACH PARTY HEREBY WAIVES ITS RIGHTS TO A TRIAL BY JURY IN ANY LITIGATION RELATED TO THIS AGREEMENT.

11. The validity of this Agreement and of any of its terms or provisions, as well as the rights and duties of the parties hereunder, shall be governed by the laws of the State of Florida and venue shall be in Palm Beach County, Florida. No remedy herein conferred upon any party is intended to be exclusive of any other remedy, and each and every such remedy shall be cumulative and shall be in addition to every other remedy given hereunder or now or hereafter existing at law or in equity or by statute or otherwise. No single or partial exercise by any party of any right, power, or remedy hereunder shall preclude any other or further exercise thereof.

12. This Agreement shall not be construed more strongly against either party regardless of who was more responsible for its preparation.

13. Except as may be required in paragraph 6 above, all parties shall be responsible for their own attorneys' fees, court costs and expenses if any legal action or other proceeding is brought for any dispute, disagreement, or issue of construction or interpretation arising hereunder whether relating to the Agreement's execution, validity, the obligations provided therein, or performance of this Agreement, or because of an alleged breach, default or misrepresentation in connection with any provisions of this Agreement.

REMAINDER OF THIS PAGE INTENTIONALLY LEFT BLANK
SIGNATURE PAGE FOLLOWS

IN WITNESS WHEREOF the parties hereto have made and executed this Variance Agreement on the day and year first above written.

CITY OF LAKE WORTH

Reviewed and approved for execution:

By: _____
Luis Martinez, Building Official

Approved as to form and legal sufficiency:

By: _____ FR
Glen Torcivia, City Attorney

PROPERTY OWNER

_____
Iran Guzman, Owner

_____
Signature of Witness

Printed Name: Rosa Rodriguez

_____
Signature of Witness

Printed Name: Dania Munoz

STATE OF FLORIDA)
COUNTY OF PALM BEACH)

The foregoing instrument was acknowledged before me this 29th day of October, 2014 by Iran Guzman, who is [☑ personally known to me] or who has produced [☐ as identification.

Notary _____

Printed Name of Notary

LEYDI NAVARRO
MY COMMISSION # FF 022246
EXPIRES: September 29, 2017
Bonded Thru Notary Public Underwriters

EXHIBIT A – COPY OF SURVEY (ATTACHED)

N

DESCRIPTION:
LOT 129, VERNON HEIGHTS, ACCORDING TO THE PLAT RECORDED IN PLAT BOOK 24, PAGE 200, AS RECORDED IN THE PUBLIC RECORDS OF PALM BEACH COUNTY, FLORIDA; SAID LAND SITUATE, LYING AND BEING IN PALM BEACH COUNTY, FLORIDA.

PROPERTY ADDRESS:
1752 22ND AVENUE NORTH
LAKE WORTH, FLORIDA
33460

LOCATION MAP NOT TO SCALE

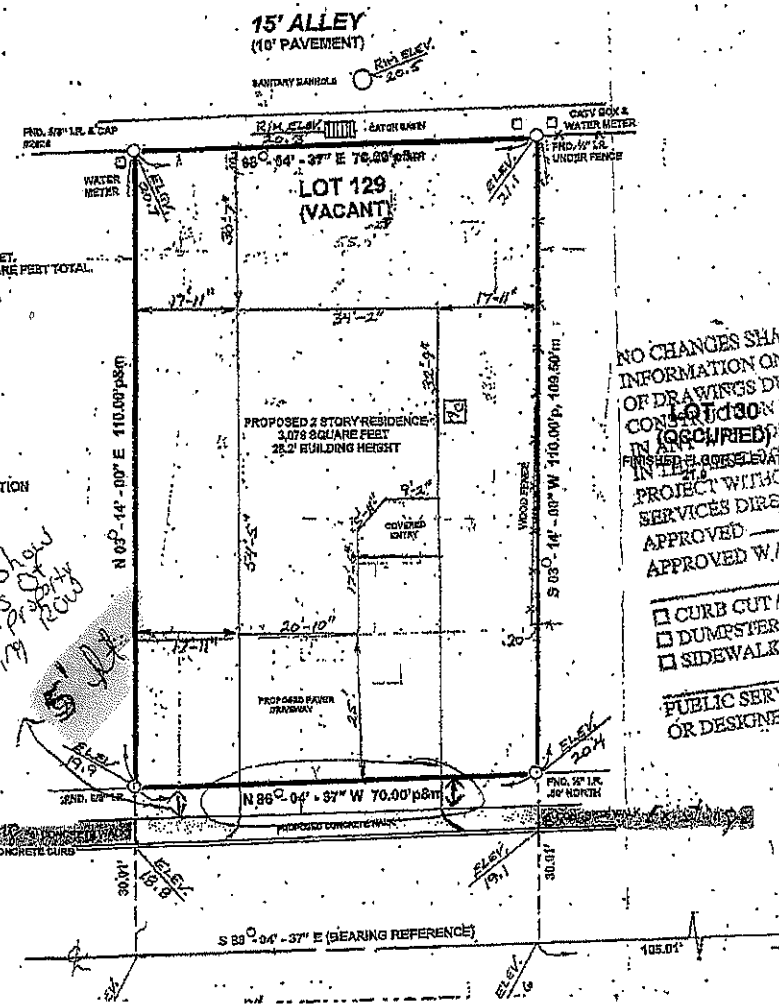

NOTE:
LOT CONTAINING 7,695 SQUARE FEET.
PROPOSED RESIDENCE 3,078 SQUARE FEET TOTAL.
2,555 SQUARE FEET LIVING AREA.
PROPOSED BUILDING HEIGHT 28.2'.

REVISIONS:
1. ADD SITE PLAN 11-13-13
2. ADD NOTE 12-17-13
3. REVISED SITE PLAN 1-16-14

Need to show dimensions of private property line
6/4/19

LEGEND:
Δ = DELTA ANGLE
AC. = AIRCONDITIONER
BLK. = BLOCK
C. = CALCULATED
CATV = CABLE TV
℄ = CENTERLINE
CONC. = CONCRETE
CBS = CONCRETE BLOCK STRUCTURE
C.B. = CORD BEARING
CM = CONCRETE MONUMENT
= CONCRETE UTILITY POLE
= COVERED
D.E. = DRAINAGE EASEMENT
ELEV. = ELEVATION
E.O.P. = EDGE OF PAVEMENT
E.O.W. = EDGE OF WATER
FF = FINISHED FLOOR
FND. = FOUND
I.R. = IRON ROD
I.P. = IRON PIPE
L = ARC LENGTH
L.B. = LICENSED BUSINESS
M = MEASURED
O.R.B. = OFFICIAL RECORD BOOK
P = PLAT
P.C.P. = PERMANENT CONTROL POINT
P.K. = PARKER KALON
P.O.B. = POINT OF BEGINNING
P.O.C. = POINT OF COMMENCEMENT
P.P. = POWER POLE
P.R.M. = PERMANENT REFERENCE MONUMENT

SURVEYORS REPORT:
SUBJECT TO EASEMENTS, RESTRICTIONS, RESERVATIONS AND RIGHTS OF WAY OF RECORD.
INFORMATION PROVIDED BY CLIENT.
NO SEARCH OF THE PUBLIC RECORDS HAS BEEN MADE BY THIS OFFICE.
THIS SURVEY NOT VALID UNLESS EMBOSSED WITH A RAISED SEAL.
ALL BEARINGS SHOWN ARE RELATIVE TO A PLAT BEARING OF SOUTH 88°-04'-37" EAST ALONG THE CENTERLINE OF 22ND AVENUE.
THE SURVEY DEPICTED HERE IS NOT COVERED BY PROFESSIONAL LIABILITY INSURANCE.
ACCURACY - SUBURBAN: LINEAR: 1 FOOT IN 7,500 FEET.
THE PURPOSE OF THIS SURVEY IS FOR BOUNDAY LOCATION.
ALL ELEVATIONS SHOWN ARE RELATIVE TO AN ASSUMED DATUM.

NO CHANGES SHALL BE MADE TO THIS APPROVED SITE PLAN WITHOUT WRITTEN CONSENT OF THE PROJECT ARCHITECT OR ENGINEER OF RECORD.

CERTIFICATION:
I HEREBY CERTIFY THAT I HAVE SURVEYED THE PROPERTY DESCRIBED HEREON, AND THAT THIS SKETCH OF SURVEY IS ACCURATE AND CORRECT TO THE BEST OF MY KNOWLEDGE AND BELIEF, THERE ARE NO APPARENT ABOVE GROUND ENCROACHMENTS OTHER THAN THOSE SHOWN OR STATED HEREON, AND THAT THIS SURVEY COMPLIES WITH THE MINIMUM TECHNICAL STANDARDS ADOPTED BY THE FLORIDA BOARD OF PROFESSIONAL LAND SURVEYORS IN CHAPTER 61-17, F.A.C.

APPROVED _____
APPROVED W/ NOTES _____

☐ CURB CUT / APPROACH ☐ DEMOLITION
☐ DUMPSTER ENCLOSURE ☐ LANDSCAPE
☐ SIDEWALK ☐ OTHER

PUBLIC SERVICES DIRECTOR DATE
OR DESIGNEE

RICHARD G. RADER, PSM
FL. CERT. NO. 4861
11285 61ST STREET NORTH
WEST PALM BEACH, FL 33412
(561)790-3068 FAX(561)790-6320

BOUNDARY SURVEY FOR:
IRAN GUZMAN

SCALE: 1" = 20'	APPROVED BY:	DRAWN BY	R.G.R.
DATE: 9-12-11		REVISED	1-15-14

CITY OF LAKE WORTH

7 North Dixie Highway · Lake Worth, Florida 33460 · Phone: 561-586-1600· Fax: 561-586-1750

AGENDA DATE: December 2, 2014, Regular Meeting **DEPARTMENT:** Public Services

---

EXECUTIVE BRIEF

TITLE:
Authorize a 'Piggyback' of the Florida Sheriffs' Association contract for tires and related services

SUMMARY:
The Authorization of a 'Piggyback' of the Florida Sheriffs' Association contract will allow the City of Lake Worth to purchase tires and related services per its contract vendor prices.

BACKGROUND AND JUSTIFICATION:
In an effort to maintain an efficient fleet maintenance operation that is in compliance with all City procurement standards, the Public Services Dept. has reviewed this contract and found it to be in the best interest of the City and the Department. The Public Services Dept. initially advertised to the public in April 2014 a Notice of Intent to Piggyback the Sheriff's Contract and offered the opportunity for vendors to provide pricing to the City for similar goods and services. The Department received proposals from two vendors and although the pricing was competitive to the Sheriffs' contract, it was higher in cost, confirming the decision to proceed with piggybacking the Sheriffs' Contract for Tires and Related Services (Bid No. 14/15-06-0131). A copy of the Florida Sheriffs' Association's contract can be viewed at the Public Services Department. Piggy-back purchases from the Sheriffs' Contract will be made by Purchase Order issued directly to the vendor with the award contract price.

MOTION:
I move to approve / not approve a 'Piggyback' of the Florida Sheriffs' Association contract for the purchase of tires and related services.

ATTACHMENT(S):
Fiscal Impact Analysis – not applicable

CITY OF LAKE WORTH

7 North Dixie Highway · Lake Worth, Florida 33460 · Phone: 561-586-1600· Fax: 561-586-1750

AGENDA DATE: December 2, 2014, Regular Meeting **DEPARTMENT:** Public Services

---

EXECUTIVE BRIEF

TITLE:
Interlocal Agreement with Palm Beach County to transfer ownership of Boutwell Road to the City of Lake Worth.

SUMMARY:
The Interlocal Agreement will transfer ownership of Boutwell Road through the Park of Commerce industrial corridor. The transfer will facilitate the implementation of a plan to develop the infrastructure, roadway network, and marketability of the area according to the City's standards and design criteria.

BACKGROUND AND JUSTIFICATION:
The Park of Commerce is bounded by Lake Worth Road to the south, 10th Ave North to the north, I-95 to the east, and the Keller Canal to the west. This area is currently underdeveloped due to the condition of the existing infrastructure and roadway network primarily owned and maintained by Palm Beach County. In an effort to increase the economic potential of the Park of Commerce, the proposed transfer of ownership provides an opportunity to develop the right of way into a functional and aesthetic roadway corridor that is in conformance with the latest City standards. The planned infrastructure requires that the roadway ownership and maintenance be transferred.

The financial impact to the City for the transfer is a yearly allocation of operational expenses inclusive of Grounds Division and Streets/Stormwater Division resources. The first two years of ownership shall have no impact to City resources and will be covered with current operational budgets. Once the Park of Commerce improvements are constructed, maintenance of the roadway, stormwater and green areas will be required and will be budgeted for accordingly.

MOTION:
I move to approve / not approve an Interlocal Agreement with Palm Beach County to transfer ownership of Boutwell Road from Palm Beach County to the City of Lake Worth.

ATTACHMENT(S):
Fiscal Impact Analysis
Boutwell Road Transfer Agreement

FISCAL IMPACT ANALYSIS

A. Five Year Summary of Fiscal Impact:

Fiscal Years	2015	2016	2017	2018	2019
Capital Expenditures	0	0	0	0	0
Operating Expenditures	0	0	8,500	8,500	8,500
External Revenues	0	0	0	0	0
Program Income	0	0	0	0	0
In-kind Match	0	0	0	0	0
Net Fiscal Impact	0	0	8,500	8,500	8,500
No. of Addn'l Full-Time Employee Positions	0	0	0	0	0

B. Recommended Sources of Funds/Summary of Fiscal Impact:

N/A in FY 2015 and FY 2016

C. Department Fiscal Review: __JB__

INTERLOCAL AGREEMENT WITH THE CITY OF LAKE WORTH AND PALM BEACH COUNTY FOR BOUTWELL ROAD OWNERSHIP

THIS INTERLOCAL AGREEMENT is made and entered into this _____ day of _____, 2014, by and between THE CITY OF LAKE WORTH, a municipal corporation of the State of Florida, hereinafter referred to as "CITY" and PALM BEACH COUNTY, a political subdivision of the State of Florida, hereinafter referred to as "COUNTY", collectively the "Parties."

WITNESSETH:

WHEREAS, the COUNTY currently has control over, responsibility for, and ownership of Boutwell Road, from Lake Worth Road to 10th Avenue North, hereinafter referred to as "ROADWAY"; and

WHEREAS, the CITY is currently working on development of the Park of Commerce of which the ROADWAY will be the primary north-south through way; and

WHEREAS, the City has contracted with an engineering consultant to prepare design plans for the ROADWAY; and

WHEREAS, the City of Lake Worth City municipal limits encompass the ROADWAY; and

WHEREAS, the CITY has expressed a desire that the ownership and maintenance responsibility of the ROADWAY be turned over to the CITY.

NOW, THEREFORE, in consideration of the mutual covenants, promises, and agreements herein contained, the Parties agree as follows:

1. The above recitals are true, correct and incorporated herein.

2. The COUNTY agrees to transfer and the CITY agrees to accept the control over, responsibility for and ownership of the ROADWAY.

3. ROADWAY does not include the intersection of 10th Ave. N. and Boutwell Road, which shall remain with the COUNTY, and which intersection limits are more clearly defined in Exhibit "A" attached hereto and incorporated herein.

4. The CITY agrees that if the COUNTY decides to perform improvements at the intersection of 10th Avenue N. and Boutwell Road, including required turn lanes and transitions, after ownership and maintenance responsibilities for the ROADWAY have been transferred to the CITY, the COUNTY shall not be required to obtain a permit from the CITY. The CITY further agrees and understands that intersection improvements performed by the COUNTY, shall be to COUNTY's design standards.

5. The CITY understands that intersection improvements will only be performed by the COUNTY, after all required right-of-way and easements have been dedicated to the COUNTY or CITY, free and clear, from the properties at the southwest quadrant of 10th Avenue N. and Boutwell Road.

6. The parties agree that the northern limit of the ROADWAY transferred from the COUNTY to the CITY by this Agreement is the Match Line shown in Exhibit "A" which is located approximately 360 feet south of the existing south right-of-way line of 10th Avenue N.

7. The CITY understands that if it decides to improve the ROADWAY after ownership and maintenance responsibilities for the ROADWAY have been transferred to the CITY, a permit will be required from the COUNTY for any work proposed that will impact the Match Line.

8. The COUNTY agrees to provide to the CITY any documentation that the COUNTY has concerning the ROADWAY. This documentation includes, but is not limited to any surveys, permits, storm drainage systems, and maintenance and improvement records for the ROADWAY.

9. The CITY understands that the COUNTY's obligations under this Agreement ceases once ownership and maintenance responsibilities for the ROADWAY have been transferred to the CITY, and the COUNTY has provided all available documentation referenced in section 8 above.

10. The COUNTY and CITY agree that no person shall, on the grounds of race, color, national origin, ancestry, sexual orientation, gender identity and expression, genetic information, religion or creed, sex, age, marital status, familial status, disability, or handicap be discriminated against in performance of this Agreement.

11. In the event that any section, paragraph, sentence, clause or provision hereof is held invalid by a court of competent jurisdiction, such holding shall not affect the remaining portions of this Agreement and the same shall remain in full force and effect.

12. All notices required to be given under this Agreement shall be in writing, and deemed sufficient to each party when sent by United States Mail, postage paid, to the following:

AS TO THE COUNTY

Engineering and Public Works Department
Tanya N. McConnell, P. E.
Deputy County Engineer
P.O. Box 21229
West Palm Beach, Florida 33416-1229

AS TO THE CITY

City of Lake Worth
Mayor Pam Triolo
7 North Dixie Highway
Lake Worth, Florida 33460-3725

13. This Agreement shall be construed and governed by the laws of the State of Florida. Any legal action necessary to enforce this Agreement shall be held in Palm Beach County. No remedy herein conferred upon any party is intended to be exclusive of any other remedy, and each and every other remedy shall be cumulative and shall be in addition to every other remedy given hereunder or now here after existing at law or in equity or by statute or otherwise. No single or partial exercise by any party of any right, power or remedy shall preclude any other or further exercise thereof.

14. Any costs or expenses (including reasonable attorney's fees) associated with the enforcement of the terms and conditions of this Agreement shall be borne by the respective Parties; provided, however, that this clause pertains only to the Parties to the Agreement.

15. Except as expressly permitted herein to the contrary, no modification, amendment, or alteration in the terms or conditions contained herein shall be effective

unless contained in a written document executed with the same formality and equality of dignity herewith.

16. Neither the COUNTY nor the CITY shall be deemed to assume any liability for the negligent or wrongful acts, or omissions of the other party (or Parties). Nothing contained herein shall be construed as a waiver, by any of the Parties, of the liability limits established in Section 768.28, Florida Statutes.

17. Each party shall promptly notify the other of any lawsuit-related complaint, or cause of action threatened or commenced against it which arises out of or relates, in any manner, to the performance of this Agreement.

18. The CITY shall indemnify, defend, and hold harmless the COUNTY against any actions, claims, or damages arising out of the CITY'S negligence in connection with this Agreement to the extent permitted by law. The foregoing indemnification shall not constitute a waiver of sovereign immunity beyond the limits set forth in Section 768.28, Florida Statutes, nor shall the same be construed to constitute agreement to indemnify the COUNTY for the COUNTY'S negligent acts or omissions.

19. The COUNTY shall indemnify, defend, and hold harmless the CITY against any actions, claims, or damages arising out of the COUNTY'S negligence in connection with this Agreement to the extent permitted by law. The foregoing indemnification shall not constitute a waiver of sovereign immunity beyond the limits set forth in Section 768.28, Florida Statutes, nor shall the same be construed to constitute agreement to indemnify the CITY for the CITY'S negligent acts of omissions.

20. Each party shall promptly notify the other of any lawsuit-related complaint, or cause of action threatened or commenced against it which arises out of or relates, in any manner, to the performance of this Agreement.

21. The Parties expressly covenant and agree that in the event any of the Parties is in default of its obligations under this Agreement, the party not in default shall provide to the defaulting party thirty (30) days written notice before exercising any of their rights.

22. The preparation of this Agreement has been a joint effort of the Parties, and the resulting document shall not solely as a matter of judicial constraint, be construed more severely against one of the Parties than the other.

23. The COUNTY has established the Office of the Inspector General, in Palm Beach County code section 2-421-2-440, as may be amended. The Inspector General's authority includes but is not limited to the power to review past, present and proposed COUNTY contracts, transactions, accounts and records, to require the production of records, and audit, investigate, monitor, and inspect the activities of the contractor, its officers, agents, employees, and lobbyists in order to ensure compliance with contract specifications and detect corruption and fraud. All contractors and parties doing business with the COUNTY and receiving COUNTY funds shall fully cooperate with the Inspector General including receiving access to records relating to Bid or any resulting contract.

24. This Agreement represents the entire understanding among the Parties, and supersedes all other negotiations, or agreements, either written or oral, relating to this Agreement.

25. A copy of this Agreement shall be filed with the Clerk of the Circuit Court in and for Palm Beach County, Florida.

26. This Agreement shall take effect on the date of execution of the Agreement by both Parties.

27. There are no third party beneficiaries to this Agreement.

REMAINDER OF THIS PAGE INTENTIONALLY LEFT BLANK

SIGNATURE PAGE FOLLOWS

IN WITNESS WHEREOF, the Parties have executed this Interlocal Agreement for Boutwell Road Ownership and it is effective on the date first above written.

CITY OF LAKE WORTH

By:_____
Pam Triolo, Mayor

ATTEST:

By:_____
Pam Lopez, City Clerk

APPROVED AS TO FORM AND
LEGAL SUFFICIENCY

By: _____
Glen J. Torcivia, City Attorney

PALM BEACH COUNTY, FLORIDA, BY
BOARD OF COUNTY COMMISSIONERS

By:_____
Mayor

ATTEST:
SHARON R. BOCK,
CLERK & COMPTROLLER

By:_____
Deputy Clerk

APPROVED AS TO FORM AND
LEGAL SUFFICIENCY

By:_____
Assistant County Attorney

APPROVED AS TO TERMS
AND CONDITIONS

By:_____
Division Director

EXHIBIT "A"

Map of ROADWAY (1 page)

N:\ENG_SER\Boutwell Rd. City Agreement

Exhibit "A"

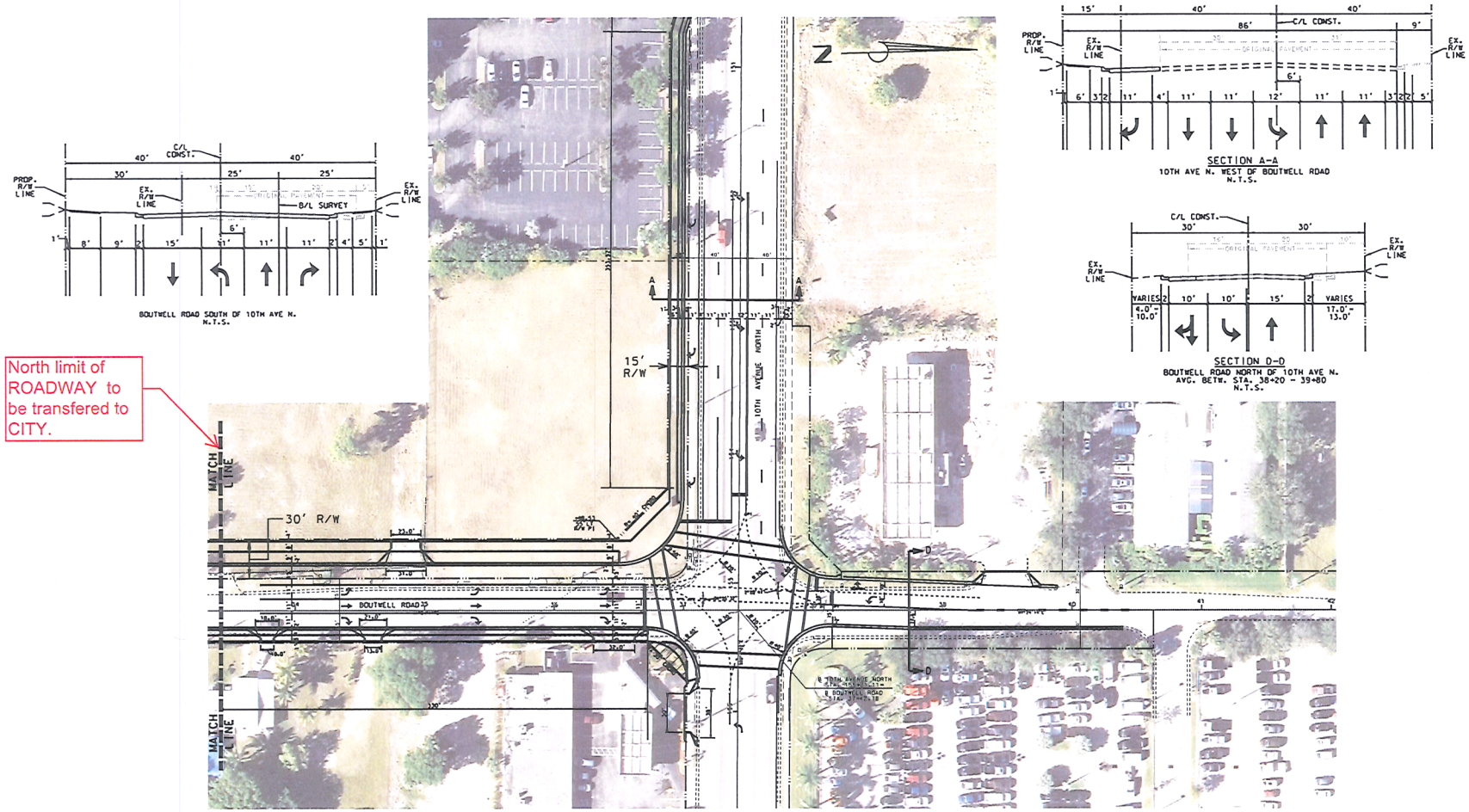

10TH AVENUE NORTH & BOUTWELL ROAD INTERSECTION IMPROVEMENTS

SCALE: 1"= 40'

FILE: 2012511 (2014 iteration5).dgn PRINTED: 03/05/14 AT 09:32

CITY OF LAKE WORTH

7 North Dixie Highway · Lake Worth, Florida 33460 · Phone: 561-586-1600· Fax: 561-586-1750

AGENDA DATE: December 2, 2014, Regular Meeting **DEPARTMENT:** Public Services

---

EXECUTIVE BRIEF

TITLE:
Temporary Construction Easement Agreement with Palm Beach County's Department of Environmental Resource Management for "Living Shoreline" improvements at Bryant Park boat ramps.

SUMMARY:
The Agreement authorizes the County and their contractor to use a small construction staging area on City property for the installation of a "Living Shoreline" project in Bryant Park along the seawall north of the boat ramps.

BACKGROUND AND JUSTIFICATION:
The National Endowment for the Arts (NEA) funded $40,000 to design and fabricate the living shoreline sculptural sections, which will include the installation of 11 units and approximately 90 feet of the shoreline. The remaining 400 feet of seawall shoreline will include approximately 1,000 tons of rock rip-rap, filter fabric, and bedding stone to be used as a base. This will further protect the new seawall, provide oyster and artificial reef habitat, and help reduce wave attenuation. In addition to the rock rip-rap, approximately 500 tons of sand will be delivered to create the correct elevation for the spartina plants.

The construction and maintenance of the project has no impact on the City's capital or operating budgets and is fully funded through PBC ERM funds. The project budget is $150,000.

MOTION:
I move to approve / not approve the Temporary Construction Easement Agreement with Palm Beach County Environmental Resource Management for the construction of the "Living Shoreline" project.

ATTACHMENT(S):
Fiscal Impact Analysis – not applicable
Temporary Construction Easement Agreement
Living Shoreline Design package

TEMPORARY CONSTRUCTION EASEMENT

THIS TEMPORARY CONSTRUCTION EASEMENT ("TCE") is made this ___ day of _____, 2014, by the **City of Lake Worth**, a Florida municipal corporation whose mailing address is 7 North Dixie Highway, Lake Worth, FL 33460 ("Grantor") for the benefit of **Palm Beach County**, a political subdivision of the State of Florida whose mailing address is 2300 North Jog Road, 4th Floor, West Palm Beach, FL 33411 ("Grantee").

RECITALS

WHEREAS, the Grantor is the fee simple owner of that certain real property located in Palm Beach County, Florida, and which is generally described as 100 S. Golfview Road and generally known as Bryant Park (including the submerged lands thereof) and as depicted in Exhibit "A" attached hereto and incorporated herein ("TCE Area"); and,

WHEREAS, the Grantee requested a TCE from Grantor over, across and under the TCE Area for the immediate and temporary accommodation of construction equipment, material, personnel and vehicles necessary for the construction of improvements by the Grantee and/or its contractor(s) in the TCE Area as depicted in Exhibit "B" attached hereto and incorporated herein ("Improvements"); and,

WHEREAS, the Grantor is willing to grant the requested TCE in accordance with the grant and covenants set forth herein; and,

WHEREAS, the Grantor finds granting this TCE serves a valid public purpose.

NOW, THEREFORE, in consideration of the grant of this TCE by the Grantor and the Grantee's use of the TCE Area, the sufficiency of which are hereby acknowledged, the following grant and covenants are made:

1. The foregoing RECITALS are true and accurate and are incorporated herein by reference.

2. This TCE shall begin on the date set forth above and shall expire one (1) year thereafter unless otherwise terminated by either the Grantor or Grantee as stated herein or extended by the Grantor. The Grantor's City Manager is authorized to terminate or extend this TCE.

3. Grantor hereby grants and conveys to Grantee an exclusive TCE for the purpose of accommodating the encroachment of construction equipment, material, personnel and vehicles over, across and under the TCE Area for the construction of improvements by the Grantee and/or its contractor(s) in the TCE Area.

4. During the term of this TCE, the Grantor may continue to use the TCE Area in anyway which is compatible with the rights granted to Grantee hereunder.

5. The Grantee shall be responsible for maintaining the TCE Area during the term of this TCE which may be disturbed by the Grantee's and/or its contractor's activities. Grantee shall repair and remedy any disturbed areas promptly upon receipt of notice from the Grantor. The Grantee shall prior to the termination or expiration of this TCE restore the TCE Area to the condition it was in prior to the date of this TCE less normal wear and tear.

6. Upon restoration of the TCE Area, the Grantee may terminate this TCE at any time upon written

notice to the Grantor.

7. The Grantor may terminate this TCE upon thirty (30) days written notice to Grantee for failing to promptly repair or remedy any disturbed areas within the TCE Area.

8. If any term or provision of this TCE, or the application thereof to any person or circumstances shall, to any extent, be held invalid or unenforceable, to remainder of this TCE, or the application of such terms or provision, to persons or circumstances other than those as to which it is held invalid or unenforceable, shall not be affected, and every other term and provision of this TCE shall be deemed valid and enforceable to the extent permitted by law.

9. All notices required by this TCE shall be sent by certified mail, return receipt requested, or by nationally recognized overnight courier, to the addresses provided above for the parties or by hand delivery to the Grantor's City Manager or to the Grantee's Department of Environmental Resource Management.

10. The Improvements to be made by Grantee in the TCE Area and any issues that arise from this TCE shall be addressed in a future Interlocal Agreement between the Grantor and Grantee.

WITNESS:

_____

Print Name:_____

GRANTOR: CITY OF LAKE WORTH, FLORIDA

By: _____

Pam Triolo, Mayor

ATTEST:

_____

Pamela J. Lopez, City Clerk

Approved as to form and legal sufficiency:

_____

Glen J. Torcivia, City Attorney

EXHIBIT "A"
DEPICTION OF TCE AREA

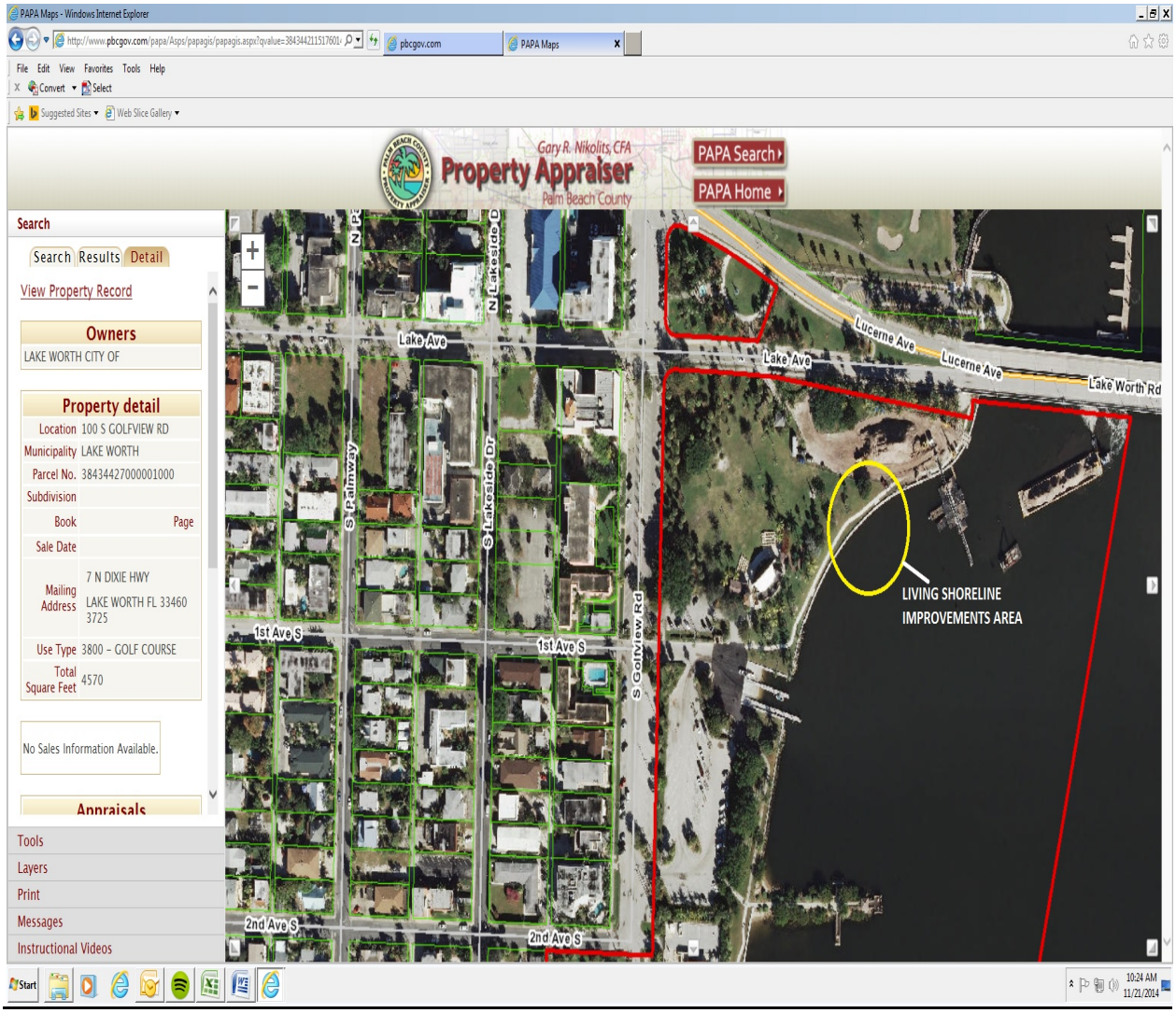

EXHIBIT "B"
DEPICTION OF IMPROVEMENTS

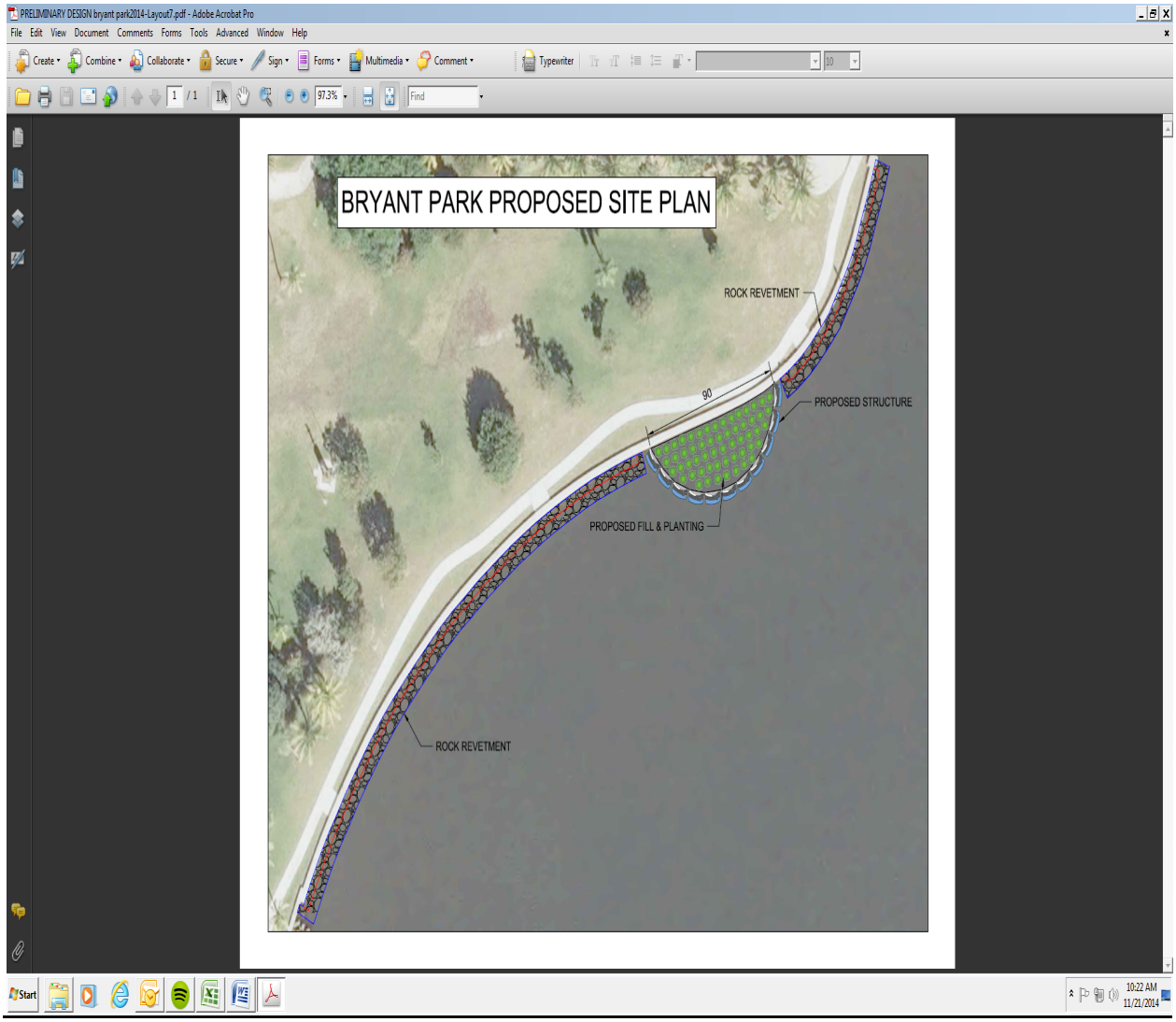

BRYANT PARK PROPOSED SITE PLAN

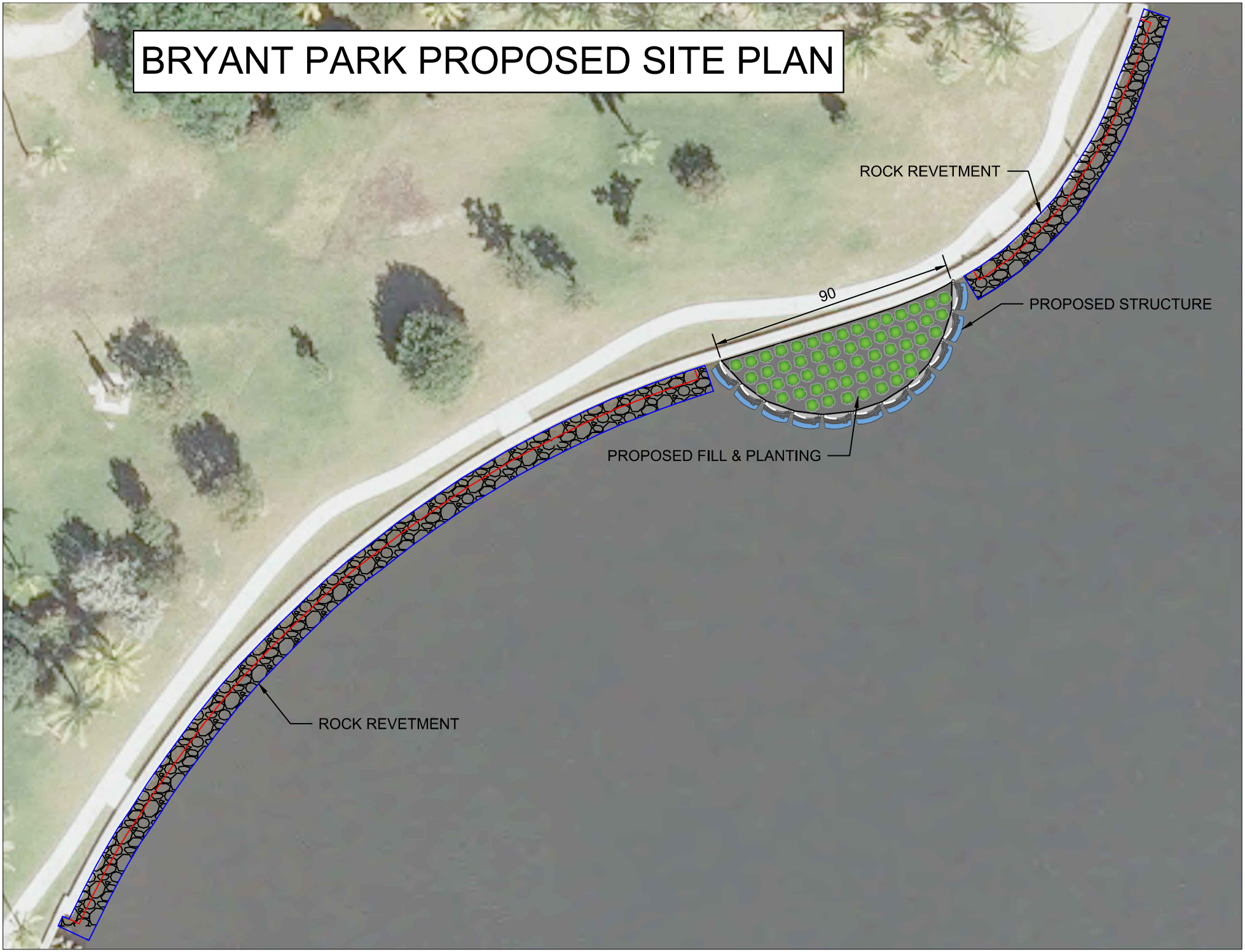

CITY OF LAKE WORTH

7 North Dixie Highway · Lake Worth, Florida 33460 · Phone: 561-586-1600· Fax: 561-586-1750

AGENDA DATE: December 2, 2014, Regular Meeting **DEPARTMENT:** Human Resources

---

EXECUTIVE BRIEF

TITLE:
Terminate a contract with Employee Assistance Professionals of South Florida, Inc.

SUMMARY:

The request authorizes the termination of a contract with Employee Assistance Professionals of South Florida, Inc. for employee assistance program services.

BACKGROUND AND JUSTIFICATION:
As a result of the recent reorganization in the Human Resources Department, it was learned that employee assistance services were being duplicated by both Employee Assistance Professionals of South Florida, Inc. and the City's medial health provider, Humana. In the best interest of the City, staff is requesting approval, under the terms and conditions of the contract, to submit a notice of termination to Employee Assistance Professionals of South Florida, Inc. effective January 31, 2015.

MOTION:
I move to approve/not approve terminating a contract with the Employee Assistance Professionals of South Florida, Inc.

ATTACHMENT(S):
Fiscal Impact Analysis
Notice of termination letter

FISCAL IMPACT ANALYSIS

A. Five Year Summary of Fiscal Impact:

Fiscal Years	2015	2016	2017	2018	2019
Capital Expenditures	0	0	0	0	0
Operating Expenditures	0	0	0	0	0
External Revenues	$4,333	0	0	0	0
Program Income	0	0	0	0	0
In-kind Match	0	0	0	0	0
Net Fiscal Impact	$4,333	0	0	0	0
No. of Addn'l Full-Time Employee Positions	0	0	0	0	0

B. Recommended Sources of Funds/Summary of Fiscal Impact:

Benefits							
Account Number (s)		**Account Description**	**FY 2015 Budget**	**Available Balance**	**Budget Transfer**	**Agenda Expenses (Rounded)**	**Remaining Balance**
		EAP Services	6,400.00	6,400.00		2,067.00	4,333.00

Where the Tropics Begin

City of **LAKE WORTH**

7 NORTH DIXIE HIGHWAY
LAKE WORTH, FLORIDA 33460
www.lakeworth.org

Office of City Manager

TELEPHONE: (561) 586-1689
FAX: (561) 586-1750

December 3, 2014

Delivered Via Certified Mail (RRR)
Employee Assistance Professionals of South Florida, Inc.
Attn: Doris Logan, President
3175 South Congress Avenue, Suite 203
Lake Worth, FL 33461-2562

Employee Assistance Professionals of South Florida, Inc.
Attn: Doris Logan, President
1499 Forest Hill Boulevard, Suite 115
West Palm Beach, FL 33406

RE: Notice of Termination of Employee Assistance Program Agreement

Dear Ms. Logan:

On December 2, 2014, the City Commission approved terminating the City of Lake Worth's Employee Assistance Program Agreement with Employee Assistance Professionals of South Florida, Inc. (dated October 1, 2002) (the "Agreement"). This notice terminates the Agreement effective thirty (30) days after delivery to you.

The City appreciates the assistance and services Employee Assistance Professionals of South Florida, Inc., has provided to the City and its employees over the years. The City's Employee Assistance Program is now covered under the City's health insurance policy.

Sincerely,

Michael Bornstein
City Manager

cc: Germaine English, Human Resources Director

CITY OF LAKE WORTH

7 North Dixie Highway · Lake Worth, Florida 33460 · Phone: 561-586-1600· Fax: 561-586-1750

AGENDA DATE: December 2, 2014, Regular Meeting **DEPARTMENT:** Human Resources- Risk

---

TITLE:
Purchase Order with Wright National Flood Insurance Company for flood insurance coverage for Fiscal Year 2014-2015

SUMMARY:
The Purchase Order will provide flood insurance coverage through Wright National Flood Insurance Company for FY 2014-2015 in an amount not to exceed $13, 478.

BACKGROUND AND JUSTIFICATION:
On September 23, 2014, the City Commission approved a Purchase Order with Preferred Government Insurance Trust (PGIT) to provide excess property and liability insurance coverage for Fiscal Year 2014-2015. It was later learned that flood insurance with Wright National Flood Insurance Company was not part of this agenda item.

MOTION:
I move to approve/not approve a Blanket Purchase Order with Wright National Flood Insurance Company for Fiscal Year 2014-2015.

ATTACHMENT(S):
Fiscal Impact Analysis
Wright National Flood Insurance Invoice

FISCAL IMPACT ANALYSIS

A. Five Year Summary of Fiscal Impact:

Fiscal Years	2015	2016	2017	2018	2019
Capital Expenditures	0	0	0	0	0
Operating Expenditures	$13,478	0	0	0	0
External Revenues	0	0	0	0	0
Program Income	0	0	0	0	0
In-kind Match	0	0	0	0	0
Net Fiscal Impact	$13,478	0	0	0	0
No. of Addn'l Full-Time Employee Positions	0	0	0	0	0

B. Recommended Sources of Funds/Summary of Fiscal Impact:

HR/Risk Mgmnt		Wright National Flood Insurance Company					
Account Number (s)		**Account Description**	**FY 2015 Budget**	**Available Balance**	**Budget Transfer**	**Agenda Expenses (Rounded)**	**Remaining Balance**
520-1331-513.45-70		Flood Insurance	1,015,200	95,437	0	(13,478)	81,959

WRIGHT Flood

Wright National Flood Insurance Company
A Stock Company
P.O. Box 33003
St. Petersburg, FL 33733-8003
Customer Service: 1-800-820-3242
Claims: 1-800-725-9472

WFL 99.023 0514
3066183
10/25/14

2000 11523 FLD RGLR

Policy Number	Prior Policy Number	Effective Date	Date of Notice
09 1150581322 04	09 1150581322 03	12/20/14 - 12/20/15	10/25/14

Agent (561)276-5221
THE PLASTRIDGE AGENCY INC
820 N FEDERAL HWY
DELRAY BEACH FL 33483-5735

CITY OF LAKE WORTH
7 N DIXIE HWY
LAKE WORTH FL 33460-3725

Renewal Notice

Property Address 1 7TH AVE N, GOLF COURSE BARN, LAKE WORTH FL 33460-2700

Dear Insured,

It's TIME TO RENEW your Flood insurance policy. Your current policy expires on 12/20/14 at 12:01 a.m. standard time. To ensure continued coverage with us, you need to make your payment on or before the expiration date of your current policy. If you are paying by check, please use the payment coupon at the bottom of this notice; or, if you would like to pay by credit card, please use the credit card payment coupon enclosed with this notice. Renewal premium payments mailed by certified mail within 30 days of the policy expiration date may ensure that the policy is renewed without a lapse in coverage.

If the coverage amount(s) shown under Option A or the payor listed below is incorrect, please contact your Agent.

OPTIONS	AMOUNT OF COVERAGE		DEDUCTIBLES	PREMIUM DUE
Option A: Pay this amount to renew your policy with the same coverage amounts as your current policy (as shown in the next box).	BUILDING	$239,100	$1,250	$13,478.00
	CONTENTS	$346,500	$1,250	
Option B: Pay this amount to renew your policy with increased coverage amounts (as shown in the next box) due to increased property values.	BUILDING	$263,000	$1,250	$13,822.00
	CONTENTS	$363,800	$1,250	

If your mortgagee is the payor of this policy, this notice is for your records only.

Please **RETURN BOTTOM PORTION** along with your payment to the mailing address below.

WRIGHT Flood

Premium payments can be made online through the website: http://www.myfloodpayment.com

Due Date: 12/20/14

Please **WRITE POLICY NUMBER ON CHECK**
and make payable to: Wright National Flood Insurance Company
Insured: CITY OF LAKE WORTH
To Be Paid By:
Insured

Option A ☐ $13,478.00
Option B ☐ $13,822.00

PO. Box 33070
St. Petersburg, FL 33733-8070

02000 11523 FLD* RGLR 091150581322 04 01347800 RE 1382200 3

00870620911505813221429802 00004 02212

Insured

WRIGHT Flood

Wright National Flood Insurance Company
A Stock Company
P.O. Box 33003
St. Petersburg, FL 33733-8003
Customer Service: 1-800-820-3242
Claims: 1-800-725-9472

WFL 99.023 0514
3066183
10/25/14

2000 11523 FLD RGLR

Policy Number		Prior Policy Number			Date of Notice
09 1150581322	04	09 1150581322	03	12/20/14 - 12/20/15	10/25/14

Agent (561)276-5221
THE PLASTRIDGE AGENCY INC
820 N FEDERAL HWY
DELRAY BEACH FL 33483-5735

CITY OF LAKE WORTH
7 N DIXIE HWY
LAKE WORTH FL 33460-3725

Dear Insured,

The credit card authorization coupon below can be used to pay your Flood Insurance premium. It may be used with VISA, MASTERCARD, AMERICAN EXPRESS, DINERS CLUB or DISCOVER CARD.

Please refer to the payment notice included with this coupon for the amount of payment due and the date your payment is due.

When filling out the credit card authorization coupon, please be sure to include your card's account number, expiration date, and the amount of payment you are applying to your card. Please also circle the type of card and have the cardholder sign in the space provided.

When you have filled out the coupon in full, please return it to us in the enclosed envelope, making sure the mailing address which is on the back of the coupon shows through the window in the envelope.

Premium payments can be made online through the website: http://www.myfloodpayment.com

In the event a return premium is generated, such premium may be returned to the credit card used in the original purchase.

Please RETURN BOTTOM PORTION as your payment.

CREDIT CARD AUTHORIZATION FOR FLOOD INSURANCE PREMIUM

VISA M/C AMX Diners Discover **Card Number** ☐☐☐☐ ☐☐☐☐ ☐☐☐☐ ☐☐☐☐

CITY OF LAKE WORTH
7 N DIXIE HWY
LAKE WORTH FL 33460-3725

__ __ / __ __ **Exp. Date** _____ **Payment Amount**

_____ **Cardholder Name** _____ **Cardholder Signature**

This policy is not subject to cancellation for reasons other than those set forth in the National Flood Insurance Program rules and regulations. In matters involving billing disputes, cancellation is not available other than for billing processing error or fraud.

02000 11523 FLD* RGLR 091150581322 04 01347800 RE 1382200 3

00870620911505813221429801 00004 02212

Insured

WRIGHT NATIONAL FLOOD INSURANCE COMPANY
THE PLASTRIDGE AGENCY INC
820 N FEDERAL HWY
DELRAY BEACH FL 33483

2000 11523 FLD RGLR
09 1150581322 04

02212

CITY OF LAKE WORTH
7 N DIXIE HWY
LAKE WORTH FL 33460-3725

WRIGHT NATIONAL FLOOD INSURANCE COMPANY
THE PLASTRIDGE AGENCY INC
820 N FEDERAL HWY
DELRAY BEACH FL 33483

02212

CITY OF LAKE WORTH
7 N DIXIE HWY
LAKE WORTH FL 33460-3725

00870620911505813221430003 03904 02212

CITY OF LAKE WORTH

7 North Dixie Highway · Lake Worth, Florida 33460 · Phone: 561-586-1600· Fax: 561-586-1750

AGENDA DATE: December 2, 2014, Regular Meeting **DEPARTMENT:** Human Resources- Risk

---

TITLE:
Purchase Order with Plastridge Agency – PBGO for special events liability insurance coverage for Fiscal Year 2014-2015

SUMMARY:
The Purchase Order will aurhorize the Plastridge Agency to provide coverage for various city events at a cost not to exceed $29,730.89.

BACKGROUND AND JUSTIFICATION:
On September 23, 2014, the City Commission approved a Purchase Order with Preferred Government Insurance Trust (PGIT) to provide excess property and liability insurance coverage for Fiscal Year 2014-2015. It was later learned that the special events liability coverage with Plastridge was not part of this agenda item.

MOTION:
I move to approve/not approve a Purchase Order with Plastridge Agency – PBGO for an amount not to exceed $29,730.89 for Fiscal Year 2014-2015.

ATTACHMENT(S):
Fiscal Impact Analysis
Plastridge Invoice

FISCAL IMPACT ANALYSIS

A. Five Year Summary of Fiscal Impact:

Fiscal Years	2015	2016	2017	2018	2019
Capital Expenditures	0	0	0	0	0
Operating Expenditures	$29,730.89	0	0	0	0
External Revenues	0	0	0	0	0
Program Income	0	0	0	0	0
In-kind Match	0	0	0	0	0
Net Fiscal Impact	$29,730.89	0	0	0	0
No. of Addn'l Full-Time Employee Positions	0	0	0	0	0

B. Recommended Sources of Funds/Summary of Fiscal Impact:

HR/Risk Mgmnt		Plastridge Agency - PBGO Company					
Account Number (s)		**Account Description**	**FY 2015 Budget**	**Available Balance**	**Budget Transfer**	**Agenda Expenses (Rounded)**	**Remaining Balance**
520-1331-513.45-70		Insurance Premiums	1,015,200	125,167	0	(29,730)	95,437

INVOICE

The Plastridge Agency-PBGO
10337 N Military Trail
Palm Beach Gardens, FL 33410

PHONE: 561-630-4955
FAX:

Account No. CITY-03

November 10, 2014

To: City of Lake Worth
Gordon Hartman
7 North Dixie Highway
Lake Worth, FL 33460

ACCOUNT MANAGER	PRODUCER	POLICY EFFECTIVE DATE	DUE DATE
Wendy Balcerzak	Brendan T. Lynch	11/15/14	Upon Receipt

DESCRIPTION	
2014 – 2015 Special Event	$29,730.89
TOTAL	$29,730.89
AMOUNT DUE	$29,730.89

Please make your check payable to: **The Plastridge Agency, Inc.**

FAILURE TO PAY THIS INVOICE WILL RESULT IN CANCELLATION OF YOUR COVERAGE

THANK YOU FOR YOUR BUSINESS!

Summary of Insurance

Prepared: 11/10/2014

For: City of Lake Worth
Gordon Hartman
7 North Dixie Highway
Lake Worth, FL
33460 561-586-1654

The Plastridge Agency-PBGO

10337 N Military Trail
Palm Beach Gardens, FL
33410 561-630-4955

Coverage	Amount	Company	Policy No	Eff	Exp	Premium
General Liability		Scottsdale Ins Co	Renewal of BCS0026305	**11/15/14**	**11/15/15**	**$29,730.89**

Occurrence

General Aggregate	$3,000,000
Products/Completed Oper. Aggr.	$3,000,000
Personal & Advertising Injury	$1,000,000
Each Occurrence	$1,000,000
Damage to Rented Premises	$100,000
Deductible	$2,500
Assault & Battery – Each Occur.	$5,000
Assault & Battery – Aggregate	$10,000

Exclusions and Endorsements Included but not Limited to:

Medical Payments; Asbestos Exclusions; Continuous or Ongoing Damages Exclusion; Designated Ops by Wrap Up Ins Program; Employment Related Practices Exclusion; Professional Services Exclusion; Fungi or Bacteria Exclusion; Known Injury or Damage Exclusion; Lead Contamination Exclusion; Silica Exclusion; Total Absolute Pollution Exclusion; All Operations of the Insured with the Exception of Designated Special Events; Total Liquor Exclusion; Nuclear Energy Exclusion; Punitive Damages; Recording and Distribution of Material in Violation of Law Exclusion; Performer, Participants, or Stage Hands Exclusion
25% Minimum Earned Premium; Designated Project, per schedule;

Subject to:
All Subcontractors carry equal General Liability limits with risk named as Additional Insured. All subcontractors carry Workers Compensation.
All subcontractors hold risk harmless via written contract.
Annual Audit
Within 10 days of binding, Acceptable, completed and Signed applications showing the insured's total expected admissions.
Written Procedures for maintaining current certificates of insurance from all Subcontractors.
Within ten days of binding, Updated List of additional insureds known to need the CG2026 from the updated list of events
Total expected admissions for the upcoming term.

CITY OF LAKE WORTH

7 North Dixie Highway · Lake Worth, Florida 33460 · Phone: 561-586-1600· Fax: 561-586-1750

AGENDA DATE: December 2, 2014, Regular Meeting **DEPARTMENT:** Community Sustainability

---

EXECUTIVE BRIEF

TITLE:
Ordinance No. 2015-01 - First Reading - designate a Residential Planned Development (RPD) located at 2430 Lake Worth Road and schedule the public hearing date for January 6, 2015

SUMMARY:
This Ordinance is for approval of Village at Lake Osborne, a Residential Planned Development (RPD), on a site 4.71 acres site consisting of 118-unit apartment complex.

BACKGROUND AND JUSTIFICATION:
The applicant, Affordable Housing Solutions Inc, is proposing to develop a 118 unit apartment complex located at 2430 Lake Worth Road. The site is 4.71 acres in area, currently vacant, and is less than the minimum site area of five (5) acres stipulated for an RPD. The project will provide market rate apartment housing.

The zoning code contains provisions for Planned Development Districts, which include Residential Planned Developments (RPD). The RPD designation allows site specific development regulations to be adopted, which in essence serves as a site specific zoning code.

The site plan was reviewed by the Site Plan Review Committee (SPRC) at their regular meeting on December 9, 2013. The SPRC recommended approval of the project subject to a number of conditions of approval.

At their November 5, 2014 regular meeting, the Planning & Zoning Board unanimously approved the Site Plan subject to the recommended conditions of approval. The Board also voted 5-0 to forward a recommendation to the City Commission to APPROVE the RPD, including a relaxation of the required five (5) acre minimum parcel size.

MOTION:
I move to approve/not approve Ordinance No. 2015-01 on first reading and schedule the public hearing date for January 6, 2015.

ATTACHMENT(S):
Fiscal Impact Analysis – not applicable
Ordinance
Application Materials
November 5, 2014 PZB Staff Report
November 5, 2014 PZB draft Meeting Minutes

ORDINANCE NO. 2015-01 OF THE CITY OF LAKE WORTH, FLORIDA, APPROVING A RESIDENTIAL PLANNED DEVELOPMENT KNOWN AS THE VILLAGE AT LAKE OSBORNE; PROVIDING FOR DEVELOPMENT STANDARDS, SEVERABILITY, CONFLICTS AND AN EFFECTIVE DATE.

WHEREAS, the City Commission of Lake Worth, Florida, pursuant to the authority in Chapter 163 and Chapter 166, Florida Statutes, and the City's Land Development Regulations, is authorized and empowered to consider petitions relating to zoning and land development orders; and

WHEREAS, the owner of the property described in Exhibit A (the property) has petitioned the City for a Residential Planned Development to be known as the Village at Lake Osborne; and

WHEREAS, on November 5, 2014, the Lake Worth Planning and Zoning Board (P&Z Board) considered the petition and recommended that the City Commission approve the Residential Planned Development including the development standards and conditions attached as Exhibit B; and

WHEREAS, the P&Z Board also approved the site plan for a 118-unit apartment complex on the property; and

WHEREAS, the P&Z Board approvals are contingent upon the City Commission's approval of the Residential Planned Development; and

WHEREAS, the City Commission has considered all of the testimony and evidence presented and has determined that the proposed Residential Planned Development including the development standards and conditions satisfy the requirements of the Land Development Regulations.

NOW, THEREFORE, BE IT ORDAINED BY THE CITY COMMISSION OF THE CITY OF LAKE WORTH, FLORIDA that:

Section 1. Recitals. The foregoing recitals are hereby affirmed and ratified as true and correct and Exhibit A and Exhibit B are incorporated herein.

Section 2. The Residential Planned Development known as The Village at Lake Osborne located at 2430 Lake Worth Rd, and consisting of approximately 4.71 acres, within the Mixed Use – West (MU-W) Zoning District, as described in Exhibit A is hereby approved. This approval includes and is contingent upon compliance with the development standards and conditions in Exhibit B.

Section 3. Repeal of Laws in Conflict. All ordinances or parts of ordinances in conflict herewith are hereby repealed to the extent of such conflict.

Section 4. Severability. If any provision of this Ordinance or the application thereof is held invalid by a court of competent jurisdiction, the invalidity shall not affect other provisions of the Ordinance which can be given effect without the

invalid provision or application, and to this end the provisions of this Ordinance are declared severable.

Section 5. Effective Date. This ordinance shall become effective ten (10) days after passage.

The passage of this Ordinance on first reading was moved by _____, seconded by _____, and upon being put to a vote, the vote was as follows:

Mayor Pam Triolo
Vice Mayor Scott Maxwell
Commissioner Christopher McVoy
Commissioner Andy Amoroso
Commissioner John Szerdi

The Mayor thereupon declared this Ordinance duly passed on first reading on the 2nd day of December, 2014

The passage of this Ordinance on second reading was moved by _____, seconded by _____, and upon being put to a vote, the vote was as follows:

Mayor Pam Triolo
Vice Mayor Scott Maxwell
Commissioner Christopher McVoy
Commissioner Andy Amoroso
Commissioner John Szerdi

The Mayor thereupon declared this Ordinance duly passed and enacted on the 6th day of January, 2015.

LAKE WORTH CITY COMMISSION

By:_____
Pam Triolo, Mayor

ATTEST:

_____
Pamela J. Lopez, City Clerk

Exhibit A

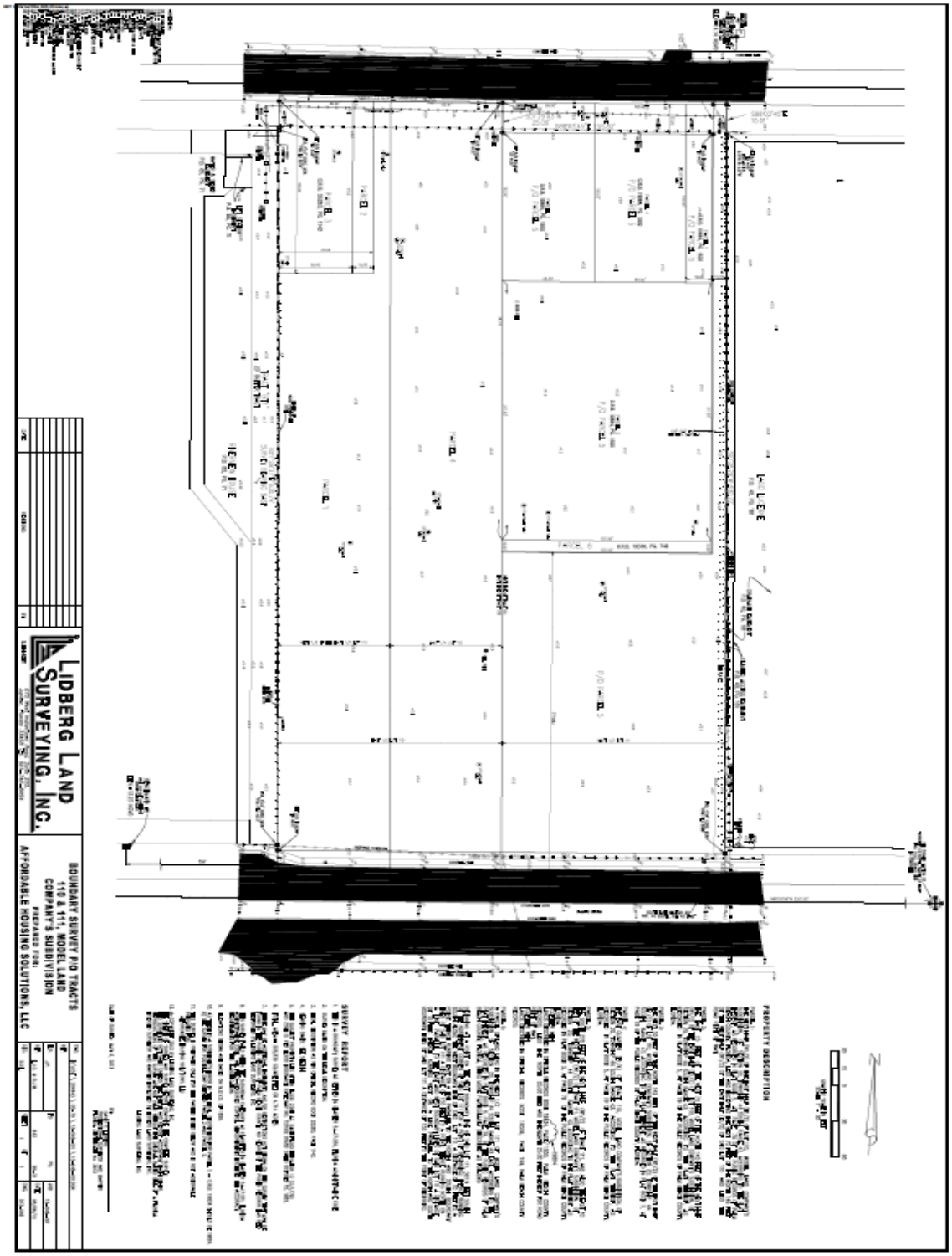
LIDBERG LAND SURVEYING, INC.
BOUNDARY SURVEY P/O TRACTS
113 & 114, MODEL LAND COMPANY'S SUBDIVISION
PREPARED FOR:
AFFORDABLE HOUSING SOLUTIONS, LLC
SURVEY REPORT
PROPERTY DESCRIPTION

Exhibit B

DEPARTMENT FOR COMMUNITY SUSTAINABILITY
PLANNING, ZONING AND HISTORIC PRESERVATION DIVISION
CONDITIONS OF APPROVAL AND DEVELOPMENT INFORMATION FOR
PZB CASE No. 13-01000002

Date of Preparation:	October 22, 2014
P&ZB Meeting Date:	November 5, 2014
Applicant:	Village II, at Lake Osborne
Location:	2430 Lake Worth Road

ATTACHMENT I
Conditions of Approval

Standard Conditions of Approval:

1. The issuance of any permits shall comply with all provisions of the Lake Worth Municipal Code and all other applicable Codes including but not limited to the Florida Building Code.

2. Unless construction has commenced pursuant to a building permit, or a time extension is granted in accordance with Code, this application shall expire one (1) year from Planning & Zoning Board Approval.

3. No Certificate of Occupancy shall be granted until all conditions of approval have been satisfied.

4. This approval is for a Residential Planned Development (RPD) pursuant to Section 23.3-25 for to allow or the construction a 118 unit multi-family rental complex within the Mixed Use – West (MU-W) zoning district at 2430 Lake Worth Road. This use must operate in compliance with all state and local laws that govern this use.

5. In the event of a legal challenge to this approval, the applicant shall be responsible for all costs to defend the action of the city in approving any and all permits related to this application. Should the applicant fail to enter into an agreement fund the costs of litigation, the city, at its discretion, may rescind this approval and revoke all permits issued.

Additional Conditions of Approval:

1. Prior to the issuance of a building permit, the applicant shall contact the Lake Worth Drainage (LWDD) District's Engineering Department and obtain any required permit(s), if necessary.
2. Prior to the issuance of a certificate of occupancy, an easement of 10 feet by 30 feet shall be dedicated to Palm Beach County Plan Tran for the installation of a bus stop along the front property line as shown on the site plan of subject to Palm Beach County Palm Tran specifications.
3. Prior to issuance of a certificate of occupancy, the applicant shall install a new six-foot wide sidewalk along Lake Worth Road and along 2nd Avenue North in compliance with the Public Services Department's specifications.
4. Prior to the issuance of a building permit, the applicant shall provide funding for underground utilities (if needed), on their section of 2nd Avenue North and along their section of Lake Worth Road.
5. All paving material must meet ADA accessibility guidelines.

6. The maximum height of all proposed lighting fixtures shall be as follows: 15 feet maximum in pedestrian areas; 25 feet in parking or vehicular use areas and 15 feet maximum when abutting a residential property.
7. Prior to the issuance of a building permit, an updated traffic performance standards letter from Palm Beach County shall be required.
8. Prior to issuance of a building permit, the ten foot easement shall be provided and shall be recorded in the public records on the west side of the property; starting at the southwest corner of the property on Lake Worth Road and ending at the Northwest Corner of 2nd Avenue North.
9. Prior to the issuance of a building permit, revise the Paving and Drainage plan sheets to change the 24 inch storm drain piping under 2nd Avenue North right of way to be Reinforced Concrete Piping (RCP), not High Density Polyethelene (HDPE) piping. The City does not allow plastic piping in the right of way and therefore requires concrete piping as part of this condition of approval prior to permit issuance.
10. Prior to the issuance of a Certificate of Occupancy, the existing 24 inch drainage piping under the sidewalk on the north side of 2nd Avenue North is to be cleaned thoroughly the entire limit of the property.
11. Prior to the issuance of a Certificate of Occupancy, the installation of a new 5' wide sidewalk with Type F curb and gutter shall be installed along the south side of 2nd Avenue North (north side of project).
12. Prior to the issuance of a building permit, provide a signage and striping plan that illustrates the revised striping pattern necessary for vehicles entering and exiting the property on 2nd Ave North. The current striping configuration on 2nd Ave North is not feasible for the planned improvements and would not be in conformance with FDOT standards.
13. Prior to the issuance of a building permit, Sheet C-WS shall be amended to show the asphalt patch for the watermain tie-in (connection) to be the full width of 2nd Avenue North.
14. Prior to the issuance of a building permit and at the time of engineering submittal, submit the plans for the force main to be upsized on 2nd Avenue North. Also, sanitary manholes to be relocated outside of parking spaces.
15. Reserved Capacity fees are due at time of building permit issuance: Water = $90,524, Sewer = $70,225.
16. Prior to approval of the issuance of a building permit, the Applicant shall submit consistent revised plans incorporating the additional parallel parking spaces along 2nd Ave North.

Approved by:

_____

Maxime Ducoste
Planning and Preservation Manager

96

97

PLANNING & PRESERVATION DIVISION
DEPARTMENT FOR COMMUNITY SUSTAINABILITY
CITY OF LAKE WORTH
1900 2ND AVENUE NORTH
LAKE WORTH, FL 33461
561.586.1687

UNIVERSAL DEVELOPMENT APPLICATION

This application is required for **ALL** applications submitted to the Planning, Zoning and Historical Preservation Division. Planning staff can answer any questions you have regarding the applications and the processes during Planner On-Call hours (Monday – Friday, 9:00 – 10:30 a.m. and 3:00 – 4:00 p.m.). Please make an appointment with planning staff if you require more than 15 minutes with a staff member.

Application Type (select all that apply):

☐ Site Plan – Minor ■ Site Plan – Major ☐ Planned Development ☐ Variance

☐ Subdivision/Plat ☐ Conditional Use ☐ Administrative Use ☐ Mural

☐ Alcoholic Beverage Distance Proximity Waiver ☐ Community Residence Proximity Waiver

☐ Gaming Establishment Distance Proximity Waiver ☐ Adult Use Distance Proximity Waiver

☐ Sustainable Bonus Incentive Program ☐ Certificate of Appropriateness ☐ Sign Variance

☐ Rezoning (Zoning Map Amendment) ☐ Zoning Text Amendment ☐ Annexation

☐ Other: _____

Project Name: Village at Lake Osborne

Project Location: 2475, 2499, 2523 Lake Worth Road and N. 2nd Avenue. Lake Worth, Florida. 33460

Legal Description: See attached Legal Description Date Platted: _____

PCN: 38-43-44-see attached Existing Zoning: MF-30 / MU-W Proposed Zoning: MF-30 /MU-W

Existing FLU: VACANT Proposed FLU: MULTIFAMILY

Proposed Use: ■ Residential; Density 23 du/acre; ☐ Commercial _____ SF; ☐ Industrial _____ SF

Total Estimated Cost of the Project: $13,000,000.00

FOR OFFICE USE ONLY			
PZ Project No.			
Associated Project Nos.			
Submittal Date		Sufficiency Date	
Project Planner Assigned			
Total Fee Amount	$ _____ ☐ PAID _____ ☐ DUE _____		

Project Manager/Contact Person: Lawrence Kramer

Company: Southeast Architect Services

Address: 4310 Broward Blvd Plantation Fl. 33317
(Street Address) (City) (State) (Zip)

Phone No.: 954-797-2821 or E-Mail Address: ldk@searchitects.com

---

Applicant Name (if different from Project Manager): Ernesto Lopes

Company: AHS Development Group, LLC

Address: 12895 S.W. 132nd Street, Suite 202, Miami, Fl. 33186
(Street Address) (City) (State) (Zip)

Phone No.: 305-255-5527 E-Mail Address: elopes@ahsdevelopment.com

---

Owner Name: Affordable Housing Solutions, LLC.

Company: Affordable Housing Solutions, LLC.

Address: 12895 S.W. 132nd Street, Suite 202, Miami, Fl. 33186
(Street Address) (City) (State) (Zip)

Phone No.: 305-255-5527 E-Mail Address: elopes@ahsdevelopment.com

---

OWNER'S CONSENT

Affordable Housing Solutions, LLC. ("Owner") certifies that it is the owner of the property located at 2475, 2499, 2523 Lake Worth Road and N. 2nd Avenue. ("Subject Property") and expressly consents to the use of the Subject Property as described in this application and to all conditions that may be agreed to as a part of the approval of this application, which may be imposed by the decision making board.

Owner hereby authorizes Lawrence Kramer, RA, as agent, to file this application and represent Owner at any and all meetings and hearings required for the approval of this application.

Owner's Signature: _____ Date: _____
Name/Title of Signatory: _____

STATE OF)
COUNTY OF)
The foregoing instrument was acknowledged before me this _____ day of _____, 20__, by _____ who is personally known to me or who produced a _____ as identification. He/she did not take an oath.

(NOTARY SEAL)

_____
(Signature of Notary Public)

_____
(Name of Notary)

PROJECT DATA

DESCRIPTION OF WORK:

Provide a **detailed** description of work to be done as a result of this application (attach additional sheets if necessary).

118 residential units (40- 1Bdr units +78- 2 Bdr units)+ Club House + Pool +170 parking spaces.

PRIOR APPROVALS:

Indicate any prior planning, zoning or building approvals that you are aware of for the property (attach additional sheets if necessary).

ADJACENT PROPERTY INFORMATION:

Complete the following table for all surrounding properties. Information located at **www.lakeworth.org/business/planning-zoning/**.

Direction	Future Land Use	Zoning District	Current Use/ Name of Development
North	MU-W	MF-30	Vacant
South	PBC PARK	PBC PO	Recreation Park
East	PBC RH-12	PBC RH	Multifamily/Lago Lucerne
West	PBC RH-12	PBC RH	Multifamily/Riverview

DEVELOPMENT STANDARDS:

Identify the applicable required and proposed development standards. If not applicable, enter "N/A". The "required" information can be located in Article 23 of the City's Code of Ordinances, Land Development Regulations, at **www.municode.com**.

Development Standard		Required	Provided
Lot Size (Acreage and SF)		1450x118=171,100 sq.ft.	5.13 acre/223,513 sq.ft.
Lot Width (Frontage)		50'	331.85'
Building Height	Primary	30'(max 2 stories)	43'-9"
	Accessory	+35'(max 3 stories)	3 stories
Setbacks	Front (South)	20'-0"	29'-10"
	Rear (North)	20'-0"	86'-3"
	Side (West)	10'-0"	53'-5"
	Side (East)	10'-0"	23'-10"
Living Area	Single-Family	600 sq. ft.	616 sq. ft.
	Multi-Family	750 sq. ft.	855 sq. ft.
Accessory Structure Limitation			
Impermeable Space Coverage		55%	52%
Building Coverage			18%
Maximum Wall Height at Setback		6'-0" HI	8'-0" HI
Floor Area Ratio Limitation		.55	.51

AFFIDAVIT OF COMPLETENESS AND ACCURACY

INSTRUCTIONS: To be completed by the individual submitting the application (owner or authorized agent).

Project Name: Village at Lake Osborne Submittal Date: _____

STATEMENT OF COMPLETENESS AND ACCURACY:

I hereby certify all property owners have full knowledge the property they own is the subject of this application. I hereby certify that all owners and petitioners have been provided a complete copy of all material, attachments and documents submitted to the City of Lake Worth relating to this application. I further certify the statements or information made in any paper or plans submitted herewith are true and correct to the best of my knowledge. I understand this application, related application material and all attachments become official records of the Planning, Zoning and Historic Preservation Division of Lake Worth, Florida, and will not be returned. I understand that any knowingly false, inaccurate or incomplete information provided by me will result in the denial, revocation or administrative withdrawal of this application, request, approval or permit. I further acknowledge that additional information may be required by Palm Beach County to process this application. I further acknowledge that any plans that I have prepared or had prepared comply with the Fair Housing Standards. I further consent to the City of Lake Worth to publish, copy or reproduce any copyrighted documents submitted as a part of this application for any third party. I further agree to all terms and conditions, which may be imposed as part of the approval of this application.

Check (✓) one: I am the ☐ property owner ☒ authorized agent.

Lawrence Kramer
(Name - type, stamp or print clearly)

_____
(Signature)

Southeast Architect Service , Inc
(Name of Firm)

4310 W Broward Blvd, Plantation. Fl. 33317
(Address, City, State, Zip)

STATE OF)
COUNTY OF)

The foregoing instrument was acknowledged before me this _____ day of _____, 20__, by _____ who is personally known to me or who produced a _____ as identification. He/she did not take an oath.

(NOTARY SEAL)

_____
(Signature of Notary Public)

_____
(Name of Notary)

SIGN POSTING AGREEMENT

(REQUIRED FOR ALL HISTORIC APPLICATIONS AND ALL PUBLIC HEARING ITEMS)

Applicant: Affordable Housing Solutions, LLC.

Property Owner: Affordable Housing Solutions, LLC.

Contact Phone No.: Ernesto Lopes

Property Location: 2475, 2499, 2523 Lake Worth Road and N. 2nd Avenue. Lake Worth, Florida. 33460

I, Ernesto Lopes, hereby affirm that I will post the notification sign(s) provided to me for a minimum of ten (10) calendar days before the scheduled date of the hearing of Planning and Zoning Case No. 14-01400007.

Signature: _____ Date: _____

Name/Title of Signatory: _____

STATE OF)
COUNTY OF)

The foregoing instrument was acknowledged before me this _____ day of _____, 20__, by _____ who is personally known to me or who produced a _____ as identification. He/she did not take an oath.

(NOTARY SEAL)

_____
(Signature of Notary Public)

_____
(Name of Notary)

PLANNING & PRESERVATION DIVISION
DEPARTMENT FOR COMMUNITY SUSTAINABILITY
CITY OF LAKE WORTH
1900 2ND AVENUE NORTH
LAKE WORTH, FL 33461
561.586.1687

SUSTAINABLE BONUS INCENTIVE PROGRAM APPLICATION

Three (3) hard copies and one (1) electronic copy of the following materials are required in order for a **Sustainable Bonus Incentive Program Application** to be deemed complete and sufficient to present to the decision making board.

All development proposals seeking increased height above two (2) stories, or additional FAR, as each may be allowed in a zoning district, shall submit this Sustainable Bonus Incentive Program Application. The application shall accompany the standard City of Lake Worth Universal Development Application for the development proposal.

The Sustainable Bonus Incentive calculations are based on the gross square footage of the bonus height or intensity requested. The additional gross square footage amount is multiplied by $**5**/square foot ("Value Multiplier") in order to determine the value of the additional improvements to be provided for the project.

A. Please indicate whether the development proposal includes bonus height or bonus intensity:

☒ Bonus Height
No. of Additional Stories: one story ("Bonus Height")
Additional Gross Floor Area: _____ ("Bonus Area")

☐ Bonus Intensity
Additional Floor Area Ratio: _____ ("Bonus Intensity")
Additional Gross Floor Area: _____ ("Bonus Area")

B. Multiply the Bonus Area by the Value Multiplier to determine the value of required improvements.

33,759.00 SF x $5/SF of Bonus Area= $ 168,795.00
(Bonus Area) (Value of Required Improvements)

TOTAL VALUE OF REQUIRED IMRPROVEMENTS: $ 168,795.00

C. Indicate the type and value of the community benefit proposed to qualify for the Bonus Area:

☒ On-Site Features and Improvements; Value: $ _____*
☐ Off-Site Improvements; Value: $ _____ *
☐ Fee-In Lieu; Amount: $ _____

*** PROVIDE A SEPARATE SHEET WITH A DETAILED DESCRIPTION OF THE PROPOSED IMPROVEMENT AND THE VALUATION OF THE SAME.**

FOR OFFICE USE ONLY			
PZ Project No.			
Associated Project Nos.			
Submittal Date		Sufficiency Date	
Project Planner Assigned			

The Community Benefits that "The Village at Lake Osborne" is providing

Based on the draft of the "City of Lake Worth Bonus Incentive Program" introduced by the staff at the Planning and Zoning Board and Historic Resource Preservation Board on February 20, 2013, there are two methods by which an applicant could satisfy the community requirements. AHS Development Group, LLC, the applicant for the "The Village at Lake Osborne", wishes to utilize the method which has a provision of additional amenities, not required by the municipal code, that are considered part of sustainable development within the project. The table below outlines the amenities within our project that we consider to fall under such category

Community Benefit Provided	**$ Value**	***Notes***
Barbeque areas with canopy	$40,000.00	
Landscaping exceeding current proposed code standards	$20,000.00	
School bus stop on 2nd Avenue	$25,000.00	
Bus Shelter on Lake Worth Road	$25,000.00	
8 foot high concrete walls along the east and the West boundaries of the property (1,250 Feet)	$106,250.00	1,520 feet x $85,00/feet
TOTAL PLANNED COMMUNITY BENEFITS	**$216,250.00**	

- ***Florida Green Building Certification:***

  Even though this project will comply with several of the Florida Green Building Code requirements and will most likely be eligible to receive a Florida Green Building Certification which, under the draft program, accounts for satisfaction of 50% of the Community Benefit Requirement ($82,047.50), AHS has opted not to include these credits in the calculations above.

The table below demonstrates the required Community Benefits based on $5.00 per square feet of additional floor area above the second story.

Community Benefits Required	**3rd Floor Area**	**$ Value**	***Notes***
Building A	11,126.00 SF	$55,630.00	Value of increase calculated based on $5.00 per square feet of area of 3rd floor.
Building B	12,907.00 SF	$64,535.00	
Building C	9,726.00 SF	$48,630.00	
Total Area of 3rd floor	**33,759.00 SF**	**$168,795.00**	33,759.00 x $5.00/ SF

SIMMONS & WHITE
5601 Corporate Way, Suite 200 West Palm Beach, Florida 33407
O 561.478.7848 | F 561.478.3738 www.simmonsandwhite.com
Certificate of Authorization Number 3452

SIMMONS & WHITE
ENGINEERING | PLANNING | CONSULTING | SINCE 1982

REDUCED PARKING STATEMENT

THE VILLAGE II AT LAKE OSBORNE
CITY OF LAKE WORTH, FLORIDA

Prepared for:

AHS Development Group, LLC
12895 SW 132nd Street
Suite 202
Miami, Florida 33186

Job No. 13-109A

Date: 08/22/2014

ROBERT FREDERICK RENNEBAUM
LICENSE
No. 41168
STATE OF
FLORIDA
PROFESSIONAL ENGINEER

AUG 25 2014

Robert F. Rennebaum, P.E.
FL Registration No. 41168

TABLE OF CONTENTS

1.0 SITE DATA 2

2.0 CODE REQUIRED PARKING 2

3.0 PARKING REDUCTION 2

4.0 CONCLUSION 3

1.0 SITE DATA

The subject parcel is generally located between 2nd Avenue North and Lake Worth Road approximately ½ mile east of Congress Avenue in the City of Lake Worth, Florida and contains approximately 4.8 acres. The Property Control Numbers for the subject parcel are as follows:

38-43-44-20-01-111-0020	38-43-44-20-01-111-0030
38-43-44-20-01-111-0010	38-43-44-20-01-110-0010
38-43-44-20-01-110-0040	

Proposed site development on the currently unimproved parcel consists of 118 multi-family apartment units with a project build-out of 2017. For additional information concerning site location and layout, please refer to the Site Plan prepared by Southeast Architect Services, Inc.

2.0 CODE REQUIRED PARKING

For residential developments consisting of more than 60 dwelling units, the City of Lake Worth Code requires 2 parking spaces per dwelling unit, plus eight guest parking spaces and one additional guest parking spaces for every 8 dwelling units over 60 dwelling units. Based on a plan of development consisting of 118 multi-family apartment units, the total Code required parking for the proposed development is 250 spaces calculated as follows:

118 D.U.'s x 2 Spaces per D.U.	=	236 Spaces
8 Guest Spaces	=	7 Spaces
8 Guest Spaces over 60 D.U.'s	=	7 Spaces
TOTAL	=	250 Spaces

3.0 PARKING REDUCTION

The above calculations are shown for informational purposes only. Given the nature of the proposed development and the location, actual parking demands are anticipated to be significantly less. The projected demographics for the residents targeted for the development have annual incomes ranging from $36,00.00 to $48,000.00. Thus, it is anticipated that the majority of the residents will have only one vehicle. Also, the project is located along a mass transit corridor with highly accessible bus routes and a Tri-Rail Station close by. It is anticipated that a substantial amount of the residents will utilize the mass transit system. Consequently, the demand for vehicle parking will not occur. There is also anticipated to be a substantial amount of pedestrian activity in lieu of vehicular use.

3.0 PARKING REDUCTION (CONTINUED)

The developer of the proposed project has completed similar successful developments and has found that parking provided as follows has been adequate to meet the parking demands of the development:

1 Bedroom Dwelling Unit – 1 Space per Unit
2 Bedroom Dwelling Unit – 1.5 Spaces per Unit

Based on the unit breakdown proposed consisting of 40 (1) bedroom dwelling units and 78 (2) bedroom dwelling units, the parking demand for the poposed development is 157 spaces. As shown on the proposed Site Plan, a total of 170parking spaces are provided, 6 of which are handicapped spaces.

In addition to the above, the ITE Parking Generation Manual (3rd Edition) states that the average peak parking demand for multi-family apartment units (Land Use #221) is approximately 1.2 spaces per dwelling unit. Applying the methodology from ITE, a total of 149 parking spaces would be adequate for the development.

4.0 CONCLUSION

As previously stated, there are a total of 170 parking spaces provided on-site. Based on the nature of the proposed development with regard to demographics, the location of the development and the accessible mass transit in the vicinity, the proposed parking as shown is anticipated to be adequate to meet the demands of the development.

SIMMONS & WHITE
5601 Corporate Way, Suite 200 West Palm Beach, Florida 33407
O 561.478.7848 | F 561.478.3738 www.simmonsandwhite.com
Certificate of Authorization Number 3452

SIMMONS & WHITE
ENGINEERING | PLANNING | CONSULTING | SINCE 1982

TRAFFIC EQUIVALENCY STATEMENT

THE VILLAGE II AT LAKE OSBORNE
PALM BEACH COUNTY, FLORIDA

Prepared for:

AHS Development Group, LLC
12895 SW 132nd Street
Suite 202
Miami, Florida 33186

Job No. 13-109A

Date: 08/22/2014

ROBERT FREDERICK RENNEBAUM
LICENSE
No. 41168
AUG 25 2014
STATE OF
FLORIDA
PROFESSIONAL ENGINEER

Robert F. Rennebaum, P.E.
FL Registration No. 41168

TABLE OF CONTENTS

1.0 SITE DATA 2

2.0 TRAFFIC GENERATION 2

3.0 SITE RELATED IMPROVEMENTS 3

4.0 CONCLUSION 3

1.0 SITE DATA

The subject parcel is generally located between 2nd Avenue North and Lake Worth Road approximately ½ mile east of Congress Avenue in the City of Lake Worth, Florida and contains approximately 4.8 acres. The Property Control Numbers for the subject parcel are as follows:

38-43-44-20-01-111-0020	38-43-44-20-01-111-0030
38-43-44-20-01-110-0010	38-43-44-20-01-110-0020
38-43-44-20-01-110-0040	

The site is currently approved for 124 multi-family apartment units with a project build-out of 2014 (copy of Palm Beach County approval letter attached). The revised plan of development consists of 118 multi-family apartment units. Site access is proposed via a full access driveway connection to 2nd Avenue North and a right-in, right-out driveway connection to Lake Worth Road. For additional information concerning site location and layout, please refer to the Site Plan prepared by Southeast Architects, Inc.

2.0 TRAFFIC GENERATION

The Palm Beach County Unified Land Development Code, Article 12, Traffic Performance Standards, Chapter A, Section 3, Subsection B requires that for any application for a site specific development order on property on which there is a current approval shall be subject to the Palm Beach County Traffic Performance Standards to the extent the traffic generation projected for the site specific development order exceeds the traffic generation of the current approval. The generation rates and capture rates of the current approval shall be updated to current pro forma traffic generation and passer-by rates and shall be used to calculate current approval/vested use traffic. The current approval traffic currently vested to the parcel may be calculated in accordance with the rates provided in Table 10.8-1 Fair Share Road Impact Fee Schedule of Article 10 and the ITE Trip Generation Manual, 9th Edition as shown in Table 1, Table 2 and Table 3 attached with this report. Table 1 shows the daily traffic generation associated with the approved and vested uses. Tables 2 and 3 show the A.M. and P.M. peak hour traffic generation, respectively. The traffic generation associated with the approved development may be summarized as follows:

Daily Traffic Generation	=	868 tpd
A.M. Peak Hour Traffic Generation (In/Out)	=	64 pht (13 In/52 Out)
P.M. Peak Hour Traffic Generation (In/Out)	=	77 pht (50 In/22 Out)

The traffic to be generated by the revised plan of development has also been calculated in accordance with the traffic generation rates listed in Table 10.8-1 Fair Share Road Impact Fee Schedule of Article 10 and the ITE Trip Generation Manual, 9th Edition as shown in Table 4, Table 5 and Table 6. Table 4 shows the daily traffic generation associated with the proposed plan of development.

2.0 TRAFFIC GENERATION (CONTINUED)

Tables 5 and 6 show the A.M. and P.M. peak hour traffic generation, respectively. The traffic to be generated by the proposed plan of development consisting of 118 multi-family apartment units may be summarized as follows:

Daily Traffic Generation	=	826 tpd
A.M. Peak Hour Traffic Generation (In/Out)	=	62 pht (12 In/49 Out)
P.M. Peak Hour Traffic Generation (In/Out)	=	73 pht (48 In/26 Out)

The decrease in traffic generation as a result of the proposed site modifications may be summarized as follows and is show in Table 7:

Daily Traffic Generation	=	42 tpd
A.M. Peak Hour Traffic Generation (In/Out)	=	3 pht (1 In/2 Out)
P.M. Peak Hour Traffic Generation (In/Out)	=	4 pht (2 In/1 Out)

3.0 SITE RELATED IMPROVEMENTS

The A.M. and P.M. peak hour turning movement volumes and directional distributions at the project entrance for are shown in Tables 5 and 6 attached with this report. The following summary applies:

DIRECTIONAL DISTRIBUTION (TRIPS IN/OUT)		
A.M.	=	12 / 49
P.M.	=	48 / 26

As previously mentioned, site access is proposed via a full access driveway connection to 2nd Avenue North and a right-in, right-out driveway connection to Lake Worth Road. Based on the Palm Beach County Engineering Guideline used in determining the need for turn lanes of 75 right turns or 30 left turns in the peak hour, no additional turn lanes appear warranted.

4.0 CONCLUSION

The revised plan of development results in a decrease of 42 daily trips, 3 A.M. peak hour trips and 4 P.M. peak hour trips from the currently approved plan of development. This project is therefore approvable with regard to the Palm Beach County Traffic Performance Standards.

THE VILLAGE II at LAKE OSBORNE

08/22/14

APPROVED DEVELOPMENT - 124 MULTI-FAMILY APARTMENT UNITS

TABLE 1 - Daily Traffic Generation

Landuse	ITE Code	Intensity		Rate/Equation	Dir Split In	Dir Split Out	Gross Trips	Internalization %	Internalization Total	External Trips	Pass-by %	Pass-by Trips	Net Trips
Apartment	220	124	Dwelling Units	7			868		0	868	0%	0	868
			Grand Totals:				**868**	**0.0%**	**0**	**868**	**0%**	**0**	**868**

TABLE 2 - AM Peak Hour Traffic Generation

Landuse	ITE Code	Intensity		Rate/Equation	Dir Split In	Dir Split Out	Gross Trips In	Gross Trips Out	Gross Trips Total	Internalization %	Internalization In	Internalization Out	Internalization Total	External Trips In	External Trips Out	External Trips Total	Pass-by %	Pass-by Trips	Net Trips In	Net Trips Out	Net Trips Total
Apartment	220	124	Dwelling Units	T = 0.49(X) + 3.73	0.20	0.80	13	52	64	0.0%	0	0	0	13	52	64	0%	0	13	52	64
			Grand Totals:				**13**	**52**	**64**	**0.0%**	**0**	**0**	**0**	**13**	**52**	**64**	**0%**	**0**	**13**	**52**	**64**

TABLE 3 - PM Peak Hour Traffic Generation

Landuse	ITE Code	Intensity		Rate/Equation	Dir Split In	Dir Split Out	Gross Trips In	Gross Trips Out	Gross Trips Total	Internalization %	Internalization In	Internalization Out	Internalization Total	External Trips In	External Trips Out	External Trips Total	Pass-by %	Pass-by Trips	Net Trips In	Net Trips Out	Net Trips Total
Apartment	220	124	Dwelling Units	0.62	0.65	0.35	50	27	77	0.0%	0	0	0	50	27	77	0%	0	50	27	77
			Grand Totals:				**50**	**27**	**77**	**0.0%**	**0**	**0**	**0**	**50**	**27**	**77**	**0%**	**0**	**50**	**27**	**77**

THE VILLAGE II at LAKE OSBORNE

08/22/14

PROPOSED DEVELOPMENT - 118 MULTI-FAMILY APARTMENT UNITS

TABLE 4 - Daily Traffic Generation

Landuse	ITE Code	Intensity		Rate/Equation	Dir Split In	Dir Split Out	Gross Trips	Internalization %	Internalization Total	External Trips	Pass-by %	Pass-by Trips	Net Trips
Apartment	220	118	Dwelling Units	7			826		0	826	0%	0	826

TABLE 5 - AM Peak Hour Traffic Generation

Landuse	ITE Code	Intensity		Rate/Equation	Dir Split In	Dir Split Out	Gross Trips In	Gross Trips Out	Gross Trips Total	Internalization %	Internalization In	Internalization Out	Internalization Total	External Trips In	External Trips Out	External Trips Total	Pass-by %	Pass-by Trips	Net Trips In	Net Trips Out	Net Trips Total
Apartment	220	118	Dwelling Units	T = 0.49(X) + 3.73	0.20	0.80	12	49	62	0.0%	0	0	0	12	49	62	0%	0	12	49	62
			Grand Totals:				**12**	**49**	**62**	**0.0%**	**0**	**0**	**0**	**12**	**49**	**62**	**0%**	**0**	**12**	**49**	**62**

TABLE 6 - PM Peak Hour Traffic Generation

Landuse	ITE Code	Intensity		Rate/Equation	Dir Split In	Dir Split Out	Gross Trips In	Gross Trips Out	Gross Trips Total	Internalization %	Internalization In	Internalization Out	Internalization Total	External Trips In	External Trips Out	External Trips Total	Pass-by %	Pass-by Trips	Net Trips In	Net Trips Out	Net Trips Total
Apartment	220	118	Dwelling Units	0.62	0.65	0.35	48	26	73	0.0%	0	0	0	48	26	73	0%	0	48	26	73
			Grand Totals:				**48**	**26**	**73**	**0.0%**	**0**	**0**	**0**	**48**	**26**	**73**	**0%**	**0**	**48**	**26**	**73**

THE VILLAGE II at LAKE OSBORNE

08/22/14

TABLE 7
TRAFFIC GENERATION DECREASE

	DAILY	AM PEAK HOUR			PM PEAK HOUR		
		TOTAL	IN	OUT	TOTAL	IN	OUT
APPROVED DEVELOPMENT =	868	64	13	52	77	50	27
PROPOSED DEVELOPMENT =	826	62	12	49	73	48	26
DECREASE =	**42**	**3**	**1**	**2**	**4**	**2**	**1**

X:\Documents\PROJECTS\2013\13-109 Village at Lake Osborne\Equivalency.xls
K.D.

Department of Engineering and Public Works
P.O. Box 21229
West Palm Beach, FL 33416-1229
(561) 684-4000
FAX: (561) 684-4050
www.pbcgov.com

Palm Beach County Board of County Commissioners

Steven L. Abrams, Mayor
Priscilla A. Taylor, Vice Mayor
Hal R. Valeche
Paulette Burdick
Shelley Vana
Mary Lou Berger
Jess R. Santamaria

County Administrator

Robert Weisman

"An Equal Opportunity Affirmative Action Employer"

printed on recycled paper

October 15, 2013

Mr. William Waters
Director – Community Development
City of Lake Worth
1900 2nd Avenue North
Lake Worth, FL 33461

RE: Villages @ Lake Osborne
Project #: 130914
TRAFFIC PERFORMANCE STANDARDS REVIEW

Dear Mr. Waters:

The Palm Beach County Traffic Division has reviewed the traffic study for the proposed residential project entitled **Villages @ Lake Osborne,** pursuant to the Traffic Performance Standards in Article 12 of the Palm Beach County Land Development Code. The project is summarized as follows:

Location:	North side of Lake Worth Road, east of Congress Avenue, south of 2nd Avenue N.
Municipality:	Lake Worth
PCN #:	38-43-44-20-01-111-0020, 38-43-44-20-01-111-0030, 38-43-44-20-01-110-0010, 38-43-44-20-01-110-0020, 38-43-44-20-01-110-0040.
Existing Uses:	Vacant
Proposed Uses:	124 MF Residential Units (Apartments)
New Daily Trips:	868
New PH Trips:	64 AM and 77 PM
Build-Out:	Year End 2017

Based on our review, the Traffic Division has determined the proposed residential project meets the Traffic Performance Standards of Palm Beach County. No building permits are to be issued by the City after the build-out date specified above. The County traffic concurrency approval is subject to the Project Aggregation Rules set forth in the Traffic Performance Standards Ordinance. If you have any questions regarding this determination, please contact me at 684-4030 or e-mail to matefi@pbcgov.org.

Sincerely,

Masoud Atefi - MSCE
TPS Administrator, Municipalities - Traffic Engineering Division

MA:sf
ec: Bryan G. Kelley PE., - Simmons & White
Steve Bohovsky, Technical Assistant III, Traffic Division

File: General - TPS - Mun - Traffic Study Reviews
N:\TRAFFIC\ma\Admin\Approvals\2013\130914.doc

KBP CONSULTING, INC.

September 18, 2014

Mr. Larry Kramer
Southeast Architect Service
4310 W. Broward Boulevard
Plantation, Florida 33317

Re: The Village II at Lake Osborne – Lake Worth, Florida
Parking Analysis

Dear Larry:

The Village II at Lake Osborne is a proposed residential apartment community to be located on Lake Worth Road (State Road 802) between I-95 and Congress Avenue in Lake Worth, Palm Beach County, Florida. More specifically, the subject site is located at 2340 Lake Worth Road. The site, which is currently vacant, is proposed to be developed with 118 apartment dwelling units. The required number of parking spaces for this community is 212 parking spaces and the proposed parking supply is 170 parking spaces. The purpose of this technical memorandum is to determine if the proposed parking supply will be sufficient to accommodate the anticipated parking demand.

Parking Inventory

As mentioned previously, the parking required per Code for this development is 212 spaces. With 118 dwelling units, this translates to a parking rate of 1.80 spaces per dwelling unit. The proposed parking supply is 170 parking spaces which would translate to 1.44 spaces per unit. Based upon the experience of the development team, the proposed rate and corresponding parking supply is consistent with other comparable developments in south Florida with similar demographics.

Parking Analysis – Data Collection

In order to determine (or verify) the adequacy of the proposed parking supply at The Village II at Lake Osborne, parking observations were performed at three (3) similar (i.e. in terms of unit mix and demographics) residential apartment communities in south Florida. The communities selected for this analysis are as follows:

- The Apartments at Crystal Lake, 3921 Crystal Lake Drive, Deerfield Beach (89 units)
- Waterview, 3621 Hillsboro Boulevard, Coconut Creek (192 units)
- Palm Club, 2425 Avenue N, Lake Worth (160 units)

For the purposes of determining the peak parking demand, field observations were performed on a typical weekday between 5:00 AM and 7:00 AM and between 9:00 PM and 11:00 PM. In addition, observations were performed on a typical Sunday evening between 9:00 PM and 11:00 PM. During these time periods, the number of occupied parking spaces was documented every 30 minutes and the overall peak parking demand rate was calculated based upon the peak parking demand for the entire observation time period.

8400 North University Drive, Suite 309, Tamarac, Florida 33321
Tel: (954) 560-7103 Fax: (954) 582-0989

Table 1 below summarizes the results of this data collection effort and the detailed data for this effort are included in Attachment A of this technical memorandum.

Table 1
Parking Analysis
The Village II at Lake Osborne - Lake Worth, Florida

Observation Location	Number of Dwelling Units	Peak Parking Demand	Peak Parking Rate
The Apts @ Crystal Lake (Deerfield Beach)	89	121	1.36
Waterview (Coconut Creek)	192	287	1.49
Palm Club (Lake Worth)	160	236	1.48
		Average Parking Rate:	**1.46**

As indicated above, the peak parking rates at the communities studied range from 1.36 spaces per dwelling unit at The Apartments at Crystal Lake to 1.49 spaces per dwelling unit at Waterview. As a result, the proposed parking rate of 1.44 spaces per dwelling unit at The Village II at Lake Osborne is comparable to the actual field measured demand exhibited at similar communities in south Florida.

Conclusions

Based upon the foregoing data collection and analysis, the proposed parking rate (1.44 spaces per dwelling unit) and corresponding parking supply (170 parking spaces) at the Village II at Lake Osborne is comparable to the observed peak parking demand at similar residential apartment communities in south Florida. Furthermore, due to the proximity of the site to the campus of Palm Beach State College, existing Palm Tran routes, and the Lake Worth Tri-Rail Station, it is expected that reliance upon automobiles will be less than that of other similar communities.

If you have any questions or require additional information, please do not hesitate to contact me.

Sincerely,

KBP CONSULTING, INC.

Karl B. Peterson, P.E.
Senior Transportation Engineer

8400 North University Drive, Suite 309, Tamarac, Florida 33321
Tel: (954) 560-7103 Fax: (954) 582-0989

Attachment A

Parking Data

Study Location: The Apartments at Crystal Lake
Dwelling Units: 89

Date	Time Period	Parking Zone North	South	East	West	TOTAL	Peak Parking Rate
Wednesday, August 6, 2014	5:00 - 5:30 AM	19	22	64	16	121	1.36
	5:30 - 6:00 AM	18	22	64	16	120	
	6:00 - 6:30 AM	18	20	63	16	117	
	6:30 - 7:00 AM	15	20	58	12	105	
	9:00 - 9:30 PM	17	15	44	16	92	
	9:30 - 10:00 PM	18	20	44	16	98	
	10:00 - 10:30 PM	18	19	48	16	101	
	10:30 - 11:00 PM	19	19	58	16	112	
Sunday August 10, 2014	9:00 - 9:30 PM	19	18	44	16	97	
	9:30 - 10:00 PM	19	18	45	16	98	
	10:00 - 10:30 PM	19	18	50	15	102	
	10:30 - 11:00 PM	18	18	54	16	106	

Study Location: Waterview
Dwelling Units: 192

Date	Time Period	A	B	C	D	E	F	G	H	I	J	K	TOTAL	Peak Parking Rate
		Parking Zone												
	5:00 - 5:30 AM	29	20	3	21	45	23	7	16	48	50	25	287	1.49
	5:30 - 6:00 AM	30	21	3	21	43	23	7	16	49	49	25	287	1.49
	6:00 - 6:30 AM	30	21	3	21	44	22	5	14	46	48	25	279	
	6:30 - 7:00 AM	30	21	0	19	45	20	6	13	41	47	23	265	
Thursday September 11, 2014	9:00 - 9:30 PM	29	16	2	18	43	22	4	16	37	44	24	255	
	9:30 - 10:00 PM	28	17	2	19	43	22	5	16	37	45	24	258	
	10:00 - 10:30 PM	29	17	2	20	46	22	4	17	41	46	26	270	
	10:30 - 11:00 PM	28	18	2	20	48	23	4	17	42	47	27	276	
	9:00 - 9:30 PM	30	18	3	14	44	26	5	13	44	49	27	273	
Sunday	9:30 - 10:00 PM	31	17	3	18	45	26	5	12	44	49	27	277	
September 14, 2014	10:00 - 10:30 PM	30	19	3	16	45	26	5	14	45	49	28	280	
	10:30 - 11:00 PM	31	20	3	16	43	27	5	14	45	49	28	281	

Study Location: Palm Club
Dwelling Units: 160

		Parking Zone									Peak Parking
		Lot 1				Lot 2					
Date	**Time Period**	**North**	**South**	**East**	**West**	**North**	**South**	**East**	**West**	**TOTAL**	**Rate**
Tuesday September 9, 2014	5:00 - 5:30 AM	18	0	53	53	3	37	42	30	236	1.48
	5:30 - 6:00 AM	17	0	53	53	3	36	39	31	232	
	6:00 - 6:30 AM	17	0	51	53	3	35	40	30	229	
	6:30 - 7:00 AM	16	0	50	51	3	31	38	29	218	
	9:00 - 9:30 PM	17	0	40	45	1	29	34	28	194	
	9:30 - 10:00 PM	18	0	41	47	1	30	32	31	200	
	10:00 - 10:30 PM	18	0	39	50	1	32	33	30	203	
	10:30 - 11:00 PM	19	0	45	48	1	34	37	29	213	
Sunday September 7, 2014	9:00 - 9:30 PM	16	1	40	46	6	32	40	24	205	
	9:30 - 10:00 PM	18	1	45	45	6	28	42	30	215	
	10:00 - 10:30 PM	18	1	45	47	6	31	41	28	217	
	10:30 - 11:00 PM	20	1	47	49	6	33	43	26	225	

City of Lake Worth
Department for Community Sustainability
Planning, Zoning and Historic Preservation Division
1900 Second Avenue North· Lake Worth, Florida 33460 · Phone: 561-586-1687

DATE: November 5, 2014

TO: Members of the Planning & Zoning Board

FROM: Curt Thompson, Community Planner
Maxime Ducoste, Planning and Preservation Manager

SUBJECT: **PZB Project Number 13-01000002 which includes the following:**

- A recommendation to the City Commission for a Residential Planned Development (RPD) (Village II, at Lake Osborne) to establish uses and development standards for the Village II at Lake Osborne RPD and to incorporate the master development plan;

- Consideration of a request to incorporate additional height and a third story pursuant to the Community Benefits provision outlined in the City's adopted Comprehensive Plan;

- Consideration of a request for Major Site Plan Approval for a 118 unit apartment complex on a +/- 4.71 acre site located at 2430 Lake Worth Road in the MU-West Zoning District, with a Future Land Use Map designation of Mixed Use West (MU-W);

P&ZB Meeting Date: November 5, 2014

SYNOPSIS:

Applicant	Affordable Housing Solutions, LLC
General location	2430 Lake Worth Road
Property size	Total: 205,339 sq. ft./4.71 acres
Minimum lot width	100 feet required; 331.85 feet
Zoning	MU-W
Existing land use	Vacant
Future land use designation	Mixed Use - West

Applicable Municipal Code Sections	23.3-18 and 23.3-25		
	Required		**Proposed**
Building height	Comprehensive Plan: 30' (2 stories) by right; 65'(6 stories maximum) w/ Community Benefit	RPD Ordinance: 65' (6- stories)	43'-9" feet (3 stories) * *measurement is at the average height from crown of adjacent road or base flood elevation.
Lot size	217,800 square feet (5 Acres)		205,339 square feet (4.71 acres)
Lot coverage	55% of lot area		52% proposed
Total building area	35%		18%
Landscape area	45%		48% (98,562.72 sq. ft.)
Parking	217 spaces		170 spaces
Setbacks			
Front (Lake Worth Road)	20 feet		29 feet, 10 inches
Side Street(East Property Line)	20 feet		23 feet, 10 inches
Side Street (West Property Line)	20 feet		53 feet
Rear (North property Line)	15 feet		86 feet
Board action required	Make a recommendation to the City Commission of approval, approval with conditions, or denial of the proposed Residential Planned Development (RPD) to construct a 118 multi-family rental unit development with amenities. The site is located on 4.71 acres and is located with the Mixed Use – West (MU-W) Zoning District. Also to development standards for the RPD and to incorporate the master development plan. Approve, approve with conditions, or denial of the proposed additional height and third story through the site plan and community benefits pursuant to the provision of the Sustainable Bonus Incentive Program.		

Staff Recommendation	Staff recommends approval of an RPD to establish uses and development standards for the RPD and approval of the site plan as proposed and of the proposed additional height and third story through community benefits pursuant to the provision of the Sustainable Bonus Incentive Program.	
	Name and Title	**Initials**
Project planner	Curt Thompson, Community Planner	CT
Approved by	Maxime Ducoste, Planning & Preservation Manager	MD

BACKGROUND/PROPOSAL:

The applicant, Affordable Housing Solutions Inc, is proposing to develop a 118 unit apartment complex located at 2430 Lake Worth Road. The site is 4.71 acres in area and is currently vacant. The project will provide market rate workforce housing.

The project consists of a three (3) part request which includes the following:

- A **Residential Planned Development (RPD)** to establish uses permitted in the RPD, development standards for the RPD, and to incorporate master development plan for the project.
- Approval of a **Site Plan**;
- **Community Benefits** pursuant to the Sustainable Bonus Incentive Program to allow additional height/stories above the first two stories;

The zoning code contains provisions for Planned Development Districts which include Residential Planned Developments (RPD). The RPD designation allows site specific development regulations to be adopted, which in essence serves as a site specific zoning district. A more detailed discussion regarding the RPD is provided in the analysis section.

The site plan was reviewed by the Site Plan Review Team (SPRT) at their regular meeting on December 9, 2013. The SPRT recommended the project be subjected to a number of conditions of approval, which have been included for the Board's reference.

The following analysis includes a discussion about the specific site improvements the applicant is proposing followed by an analysis that addresses each of the three (3) part request outlined in the project description.

ANALYSIS:

The applicant is proposing a 118 unit apartment development. The unit mix will consist of 40 one (1) bedroom apartments, 78 two (2) bedroom apartments. Each one (1) bedroom apartment will have 616 square feet of living area and a 48 square foot balcony; each two (2) bedroom apartment will have 855 square feet of living area and a 48 square foot balcony. The units will be allocated throughout three (3) buildings, with each being three (3) stories with a height of 43 feet 9 inches. Also, a +/- 1,078 square foot space for Gym, Office, and recreational space in Building "C" will be provided. Other site improvements include 170 on-site parking spaces, a six (6) foot high fence within the front setback along Lake Worth Road and 2nd Avenue North; and an eight (8) foot height concrete wall along the eastern and western perimeters, a community pool, a bicycle parking area, one (1) barbeque area, and a walking path around the perimeter of a half acre lake. Both project driveways (on Lake Worth Road and 2nd Avenue N respectively) will be paved with stamped concrete.

The site will be fully landscaped, with an extensive planting palette that includes 71 trees, 27 palm trees, 52 flowering trees and a large variety of shrubs and ground covers. The planting palette and plant material arrangement is fully depicted in the landscape plan which has been included for your review. As proposed the landscape plan exceeds all the requirements of the Land Development Regulations (LDRs).

Consistency with the Comprehensive Plan

The applicant's proposal to develop an apartment complex at the subject site is consistent with a number of Comprehensive Plan objectives and policies, which are outlined below:

- **Policy 1.3.4.4:** Redevelopment opportunities will be maximized through use of mixed land use designations that permit a flexible mix of multifamily residential and compatible office uses.

  The project site has a Future Land Use Designation of Mixed Use-West and a Mixed Use – West (MU-W) zoning designation. The applicant is proposing a residential planned development for this project site, which is intended to "encourage through incentives the use of innovative land planning and development techniques to create more desirable and attractive development in the City". The RPD designation includes flexibilities, which make the type of infill development feasible. This flexibility is inherent to the development standards of the RPD designation and the density allowed in the Mixed Use-West land use category facilitate the type of compact development the applicant is proposing.

- **Policy 1.3.9.1:** The City shall further discourage urban sprawl by:

1. Continuously promoting compact developments within the mixed use, high density residential and TOD areas while providing adequate public services for each development in the most cost effective manner possible; and,

The applicant is proposing a compact development in the Mixed Use-West land use category. Existing public services, including potable water, sewer, fire and police services, are adequate to serve the project. The compact nature and proposed density of 23 dwelling units/acre is consistent with the Mixed Use-West future land use designation and this policy.

- **Policy 1.6.1.3:** The City shall encourage new development, infill and redevelopment in conjunction with existing or planned transit improvements where possible.

  Currently the site is served by public transit in the form of bus service with an existing bus-stop located at the southwest corner of 2nd Avenue and Boutwell Road. The site is located approximately one mile west of the Tri-Rail Station located at the I-95 overpass and Lake Worth Road TOD land use designation. This is within a 10 minute walk of the project site and provides the type of density which is transit supportive. It can be expected that a significant number of the future tenants of the proposed apartment complex will utilize the public transit available in the immediate area.

- **Synopsis - Future Land Use Element:**

  As denoted in the synopsis, the ability to achieve building heights above 30 feet and additional stories above the first two (2) requires the provision of community benefits to achieve the additional height. As the analysis will show, the project as proposed complies with the intent of the community benefits requirement and therefore is found to be consistent with the synopsis of the future land use element.

- **Objective 1.3.10:** The City shall establish incentives to help aid the creation of compact, sustainable, community oriented development;

- **Policy 1.3.10.1:** The City shall establish a Community Benefits program to provide for increased intensity and height allowances in return for specific project or public components that would create or increase quality of life measures for a larger segment of the population. The Community Benefits program will be more fully developed and implemented through the City's Land Development Regulations.

  Objective 1.3.10 and Policy 1.3.10.1 create the impetus for the incentive program and the implementing policy. While the Community Benefits program is still being drafted as part of the proposed Land Development Regulations, the project must still meet the

requirements of the City's Comprehensive Plan and, therefore, has been reviewed with the proposed Community Benefits provision in mind. As described in more detail below, the project meets the intent of the Comprehensive Plan objective and policy regarding Community Benefits.

It is evident through consistency with the identified objectives and policies that the project is consistent with the adopted Comprehensive Plan.

Residential Planned Development

The stated intent of a Planned Development District, as outlined in Zoning Code Section 23.3-25, states, "The intent of this article is to encourage through incentives the use of innovative land planning and development techniques to create more desirable and attractive development in the city. Incentives include but are not limited to:

1. Relaxing or waiving of height setback lot dimensions and lot area requirements;
2. Allowing an increase in density and/or a decrease in minimum living area per dwelling unit; and
3. Permitting uses or a mixture of uses not normally permitted in the underlying zoning district".

The "MU-W mixed use district" is intended to provide for the establishment and expansion of a broad range of office and commercial uses, including moderate intensity and higher intensity commercial, hotel/motel and **medium-density multiple-family residential** development along the city's western thoroughfares. The Mixed Use – West (MU-W) standards have been used for this RPD project.

Consistent with the stated intent of Planned Development Districts to provide flexibility, the applicant is proposing alternative development standards which deviate from the base zoning code. The applicant is also requesting approval for of the proposed site plan.

The proposed development standards of the Village II at Lake Osborne RPD are outlined in the table below and compared to the development standards of the underlying Mixed Use-West (MU-W) zoning district requirements of the zoning code. If a particular development standard is not specifically addressed in the table below, then the base zoning code requirement is applicable.

Development Standard:	MU-W District or other applicable zoning code requirement:	Proposed Site Plan:	Difference
• **Set Backs**			
Front [Lake Worth Road]:	20	29 feet, 10 inches	9 feet, 10 inches
Side Set Back [East Property Line]:	20	23 feet, 10 inches	3 feet, 10 inches
Side Street Set Back [West Property Line.]:	20	56 feet	36 feet
Rear Set Back [along 2nd Avenue N.]:	20	86 feet, 3 inches	66 feet, 3 inches
Lot Area - RPD	5 acres	4.71	-.29
• **Impervious Area Percentage**	65%	52%	13%
• **Pervious Area Percentage**	45%	48%	3%
• **F.A.R. Floor Area Ratio**	1.80	.51	1.29
• **Allowable Density**	30 dwelling units/acre[1]	30 dwelling units/acre	
• **Building Height**	45’	43 feet, 9 inches	1 foot, 3 inches
• **Minimum Unit Size** [square foot area]			
1 Bed Room:	600	616; Balcony 48	16 Living Area; Balcony 48
2 Bed Room:	750	855; Balcony 48	105 Living Area; Balcony 48
• **Parking Requirements**			
1 Bed Room Unit:	1.0/ unit = 40	1.0 / unit= 40	40 / 40 units
2 Bed Room Unit:	2.0/ unit=156	1.5 / unit=117	117 / 78 units
Guest Parking over 60 dwelling units	20		
Total Parking Required:	216 spaces[3]	n/a	n/a
Total Parking Proposed:		170 spaces	46 spaces
• **Parking Space Dimensions:**	9'-6" X 19'-0" standard space	9'-0" X 18'-0" standard space	0'-6" X 1'-0" standard space
• **Compact Space:**	none	8’-6” x 18’0”	8’-6” x 18’0”
• **Disabled Parking**	12'-0" X 18'-0" Accessible space	12'-0" X 18'-0" Accessible space	12'-0" X 18'-0" Accessible space

Development Standard:	MU-W District or other applicable zoning code requirement:	Proposed Site Plan:	Difference
The comprehensive plan designation of Mixed-Use West limits density to 30 dwelling units/acre); The Comprehensive Plan limits maximum height to 30' and two stories by right; 65' & 6 stories is only attainable through the provision of community benefits; Total parking required by base zoning code requirements.			

As outlined in the table above, the applicant is proposing modifications to the base Land Development Regulations with respect to required lot area, impervious surface area, the amount of parking provided per unit, and the minimum size of a parking stall. These proposed deviations are consistent with the stated intent of Planned Development Districts to provide incentives in the form of relaxed development standards to create more desirable and attractive development in city.

According to Section 23.3-25(d)(2) of the Land Development Regulations, "an area of lesser size may be approved for a mixed use planned development zoning upon findings by the planning and zoning board or historic resources preservation board, as applicable, and the city commission that particular circumstances justify such a reduction, and requirements for planned development district zoning and the benefit to be derived from planned development district zoning can be derived in such lesser area".

The applicant's lot is 4.71 acres in size, a difference of .29 acres (6 percent). Thus, the applicant is only 6 percent short of meeting this standard. Since this project meets the minimum building setback, landscape requirements, and allowable density for this Residential Planned Development (RPD) and has dedicated land for public right of way, it is the staff's professional opinion that these particular circumstances justify such a reduction and the benefits derived from this Residential Planned Development can be derived in a lesser area.

In addition, the number of parking spaces the applicant is proposing is less than what is indicated in the Land Development Regulations. According to Section 23.3-25(b) (2):

"*Conflict with other regulations.* The provisions of this section shall apply generally to the creation and regulation of all planned development districts. Where conflicts exist between these special planned development provisions and regulations relating to the installation operation or service requirements of any utility system or service, the utility regulations shall apply***. Where conflicts exist between these special provisions and general zoning, subdivision or other applicable non-utility regulations, these special regulations shall apply".***

According to the traffic impact analysis submitted by Simmons & White entitled "Reduced Parking Statement", given the location of the proposed development, actual parking demands are anticipated to be less. The project demographics for the resident targeted for the development have annual incomes ranging from $36,000 to $48,000. Thus, it is anticipated that the majority of the residents will have only one vehicle. Also, the project will be located along a mass transit corridor with highly accessible bus routes and a Tri-Rail Station is close by. It is anticipated that a substantial amount of the residents will utilize the mass transit system. Consequently, the demand for vehicle parking should not occur. The applicant also anticipates a substantial amount of pedestrian activity in lieu of vehicular use.

Site Plan

The Zoning Code outlines the Planning & Zoning Board's authority to review and approve site plans in Section 23.2-30. Additionally the review criteria for site plans are outlined in Section 23.2.31 which outlines the stated intent "to promote safety and minimize negative impacts of development on its neighbors. This is done by establishing qualitative requirements for the arrangements of buildings, structures, parking areas, landscaping and other site improvements. The qualitative standards are designed to ensure that site improvements are arranged in ways which cannot be accomplished with quantitative standards".

23.2-31. ***Site design qualitative development standards***

1. Harmonious and efficient organization

Staff Response: All of the required elements of the site plan have been harmoniously and efficiently organized in relation to topography, and the size and type of parcel. The project has been designed in accord with all of the development regulations outlined in The Village II at Lake Osborne RPD. The site will be developed as to not impede the normal and orderly development or improvement of surrounding property. The area surrounding the project site is in various stages of redevelopment. The proposed development of the project site will have no negative impacts on the surrounding properties and/or uses. The criterion has been met.

2. Preservation of natural conditions

Staff Response: The project site is currently vacant. All plant material shall be Florida No.1 or better as given in the current Grades and Standards or Nursery Plants, 2nd Edition, February 1998, Florida Department of Agriculture and Consumer Services, Division of Plant Industry. Secondly, all plant material shall be subject to inspection and approval by the Landscape Architect at place of growth and upon delivery for conformity to specification.

The criterion has been met.

3. Screening and buffering

Staff Response: The applicant is proposing landscaping and buffering which exceeds the requirements of the Land Development Regulations. Along the westerly perimeter of the project site, the applicant is proposing a six (6) foot high fence and then an eight (8) foot tall precast concrete wall, to provide the project and adjacent uses sound attenuation and privacy. The wall will then give way to a six foot high fence within 20 feet from Lake Worth Road. The parking areas located parallel to the 2nd Avenue N. and Lake Worth Road rights of ways are screened by a landscape buffer, which is twenty (20) feet in width along 2nd Avenue North. Along the Lake Worth Road right of way, the proposed landscaped buffer area will be at least 29 feet in width. All the perimeter buffers serve to screen the project to a certain extent and create shading along the streetscape. Two (2) concrete block dumpster enclosures with a stucco finish have been provided that must comply with City specifications. Landscaping will be provided around the dumpster enclosures as required by the Land Development Regulations.

The criterion has been met.

4. Enhancement of residential privacy

Staff Response: The project is multi-family residential development with 118 units. The surrounding uses to the west and east are residential in nature. To the north, beyond the 2nd Avenue North right-of-way is a vacant lot (the proposed Village of Valor Site). To the south, across the Lake Worth Road right-of-way is John Prince Park. The applicant is proposing a solid barrier between the project site and the existing residences to the west and east (which increases privacy for the existing residences) and placing all of the common area amenities, consisting of two Barbeque areas, a walking path and community pool, and an on-site lake, within the interior of the project. The criterion has been met.

5. Emergency access

Staff Response: Emergency access to the site is provided along the two (2) street frontages driveways along 2nd Avenue N and Lake Worth Road. The parking area has been designed to accommodate the turning movements of emergency vehicles if necessary. The applicant is going to install two (2) fire hydrants and two (2) Fire Department connections on-site. Practical means of access is available to all sides of all buildings. The criterion has been met.

6. Access to public ways

Staff Response: Access to public rights-of-way to the project is being provided via two (2) proposed driveways located on 2nd Avenue N and Lake Worth Road respectively. The criterion has been met.

7. Pedestrian circulation

Staff Response: The new sidewalks will be constructed along both Lake Worth Road and 2nd Avenue N. as part of the project. There will be pedestrian connections at both the Lake Worth Road and 2nd Avenue N. driveways from inside the site to the newly constructed sidewalks in each respective right of way. The criterion has been met.

8. Design of access and egress drives.

Staff Response: The site will utilize two (2) new driveways along 2nd Avenue N. and Lake Worth Road respectively and will not conflict with driveways serving existing development in the immediate area. The criterion has been met.

9. Coordination of on-site circulation with off-site circulation

Staff Response: The on-site circulation has been designed in a manner consistent with all the requirements of the Land Development Regulations. Access to the site is via two (2) proposed driveways on 2nd Avenue N and Lake Worth Road respectively, which are fully improved and able to accommodate traffic associated with the project. The Palm Beach County Traffic Division reviewed the applicant's traffic study and determined the proposed residential project meets the Traffic Performance Standards of Palm Beach County. This criterion has been met.

10. Design of on-site public right-of-way

Staff Response: There are no on-site public streets or rights-of-ways associated with the project site. The criterion is not applicable.

11. Off-street parking, loading and vehicular circulation areas

Staff Response: The project site is subject to the development standards outlined in the RPD standards proposed for the project. As previously outlined, the proposed parking ratio for the RPD is as follows:

• **Parking Requirements**				
1 Bed Room Unit:	1.0 / unit	1.0 / unit	40units	40 spaces
2 Bed Room Unit:	1.5 / unit	1.5 / unit	78 units	117 spaces
Standard Parking Proposed				100 spaces
Compact Parking Proposed:				70 spaces
• **Parking Space Dimensions:**	9'-0" X 18'-0" Standard space 8'-6"X18'0" Compact space			
	12'-0" X 18'-0" Accessible space			

A "Reduced Parking Statement" prepared by Simmons & White for the project further substantiates the proposed parking ratio based on the different unit sizes. Based on the ITE Parking Generation Manual (3rd Edition) standard for multi-family apartment developments, 149 parking spaces would be required. The applicant is proposing to provide 170 parking spaces as outlined in the table above. The LDRs does not require a dedicated loading space for residential projects. The on-site circulation provided complies with the minimum drive aisle width of 24 feet and the proper turning radii for emergency vehicle. There is sufficient space available on-site so as not to hinder the free movements of vehicles and/or pedestrians over a sidewalk or street. The criterion has been satisfied.

13. Refuse and service areas

Staff Response: The applicant is proposing two (2) separate dumpster enclosures that comply with the City requirements at two (2) corners of the on-site parking area. The dumpster enclosures are proposed to be screened by a variety of planting materials. The criterion has been met.

14. Protection of property values

Staff Response: The site is currently vacant. The redeveloped site is expected to serve as a catalyst for the investment in the Lake Worth Park of Commerce. The redeveloped site should have a positive effect on property values in the immediate area. The criterion has been met.

15. Consideration of future development

Staff Response: The vicinity in which the project site is located is in various stages of development, with the City Boundary having an irregular shape in the immediate area. The applicant is undertaking the redevelopment of the site that will result in a viable multi-family development. The type of compact urban development proposed by the applicant is consistent with the Future Land Use Element of the Comprehensive Plan. The redeveloped site is expected to serve as a catalyst for investment in the Lake Worth Park of Commerce and in the Mixed Use West area. The criterion has been met.

d) ***Buildings, generally***.

1. Buildings or structures which are part of a present or future group or complex shall have a unity of character and design. The relationship of forms of the use, texture and color of material shall be such as to create one (1) harmonious whole. When the area involved forms an integral part of, is immediately adjacent to, or otherwise clearly affects the future of any established section of the city, the design, scale and location of the site shall enhance rather than detract from the character, value and attractiveness of the surroundings. Harmonious does not mean or require that the buildings be the same.

Staff Response: Meets Criterion

2. Buildings or structures located along strips of land or on a single site, and not a part of a unified multi-building complex shall achieve as much visual harmony with the surroundings as is possible under the circumstances. If a building is built in an undeveloped area, three (3) primary requirements shall be met, including honest design construction, proper design concepts, and appropriateness to the city.

Staff Response: Meets Criterion

3. All façades visible to public or adjacent property shall be designed to create a harmonious whole. Materials shall express their function clearly and not appear foreign to the rest of the building.

Staff Response: Meets Criterion

4. The concept of harmony shall not infer that buildings must look alike or be of the same style. Harmony can be achieved through the proper consideration of scale, mass, bulk, proportion, height, orientation, site planning, landscaping, materials, rhythm of solids to voids

and architectural components including but not limited to porches, roof types, fenestration, orientation and stylistic expression.

Staff Response: Meets Criterion

5. Look-alike buildings shall not be allowed unless, in the opinion of the board, there is sufficient separation to preserve the aesthetic character of the present or evolving neighborhood. This is not to be construed to prohibit the duplication of floor plans and exterior treatment in a planned development where, in the opinion of the board, the aesthetics or the development depend upon, or are enhanced by the look-alike buildings and their relationship to each other.

Staff Response: Meets Criterion

6. Buildings, which are of symbolic design for reasons of advertising, unless otherwise compatible with the criteria herein, will not be approved by the board. Symbols attached to the buildings will not be allowed unless they are secondary in appearance to the building and landscape and are an aesthetic asset to the building, project and neighborhood.

Staff Response: Meets Criterion

7. Exterior lighting may be used to illuminate a building and its grounds for safety purposes, but in an aesthetic manner. Lighting is not to be used as a form of advertising in a manner that is not compatible to the neighborhood or in a manner that draws considerably more attention to the building or grounds at night than in the day. Lighting following the form of the building or part of the building will not be allowed if, in the opinion of the board, the overall effect will be detrimental to the environment. All fixtures used in exterior lighting are to be selected for functional as well as aesthetic value.

Staff Response: Meets Criterion

8. Building surfaces, walls and roofs shall be compatible and in harmony with the neighborhood.

Staff Response: Meets Criterion

9. "Take-out" or "pick-up" windows of retail or wholesale establishments shall not be located on a building façade that faces a public right-of-way, unless they are designed in such a manner as to constitute an aesthetic asset to the building and neighborhood.

Staff Response: Meets Criterion

10. All exterior forms, attached to buildings, shall be in conformity to and secondary to the building. They shall be an asset to the aesthetics of the site and to the neighborhood.

Staff Response: Meets Criterion

11. All telephones, vending machines, or any facility dispensing merchandise, or a service on private property, shall be confined to a space built into the building or buildings or enclosed in a separate structure compatible with the main building, and where appropriate and feasible, should not be readily visible from off-premises.

Staff Response: Meets Criterion

12. Buildings of a style or style-type foreign to south Florida or its climate will not be allowed. It is also to be understood that buildings which do not conform to the existing or to the evolving atmosphere of the city, even though possessing historical significance to south Florida, may not be approved.

Staff Response: Meets Criterion

13. No advertising will be allowed on any exposed amenity or facility such as benches and trash containers.

Staff Response: Meets Criterion

14. Light spillage restriction. The applicant shall make adequate provision to ensure that light spillage onto adjacent residential properties is minimized.

Staff Response: Meets Criterion

Sustainable Bonus Incentive Program

The City of Lake Worth Sustainable Bonus Incentive Program is intended to implement Objective 1.3.10 of the city comprehensive plan future land use element and provisions therein regarding a community benefits program. This incentive program offers the opportunity to attain an option for increased height, as provided in the comprehensive plan future land use element, or an option for increased intensity (measured by floor area ratio/FAR), or both, within certain

zoning districts in exchange for the incorporation of sustainable design features, community based improvements and overall design excellence as part of a development proposal

The purpose of the Sustainable Bonus Incentive Program is to encourage the incorporation of sustainable design and development principles within new development and redevelopment projects to foster a more sustainable, economically vibrant, diverse community with an emphasis on high quality design and appreciation of the city's unique cultural, architectural, historical and natural resources

The multiplier utilized to evaluate the provision of on-site community benefits associated with The Villages II at Lake Osborne project is $5 per square foot of additional floor area above the second story. The value has been depicted as both an overall value and a per unit value, along with an outline of the quantified community benefits provided as part of the project in the table below. Staff has only included the benefits that it has determined fall into one of the quantifiable categories listed in the draft of the program.

Category	Community Benefit Provided	$ Value	Notes
Higher Quality or Additional Open Space beyond the requirements of the Municipal Code	Barbeque areas with canopies	$40,000	This is an amenity that is not required by the municipal code for multi-family residential projects
Higher Quality or Additional landscaping beyond the requirements of the Municipal Code	Landscaping exceeding current zoning code requirements	$20,000	This is an amenity that is not required by the municipal code for multi-family residential projects
Public Amenity	School Bus Stop On 2nd Avenue	$70,000	Applicant proposing landscape buffers that are twice as wide as that required by the zoning code around the entire perimeter of the project site
Public Amenity	Bus Shelter on Lake Worth Road	$25,000	A five foot concrete walking path is being provided around the entire perimeter of the on-site lake

Category	Community Benefit Provided	$ Value	Notes
Eight (8) foot high concrete walls along the east and west boundaries of the property (1,250 feet)	Precast Concrete Wall	$106,250	An eight foot high precast concrete wall is being provided between the project site and the existing residences along the eastern and western perimeter of the project site. This will provide privacy and sound attenuation for both the proposed development and the adjacent properties (1,250 feet X $85)
TOTAL PLANNED COMMUNITY BENEFIT		**$216,250**	Sum of values of community benefits, as provided by applicant
Community Benefits Required	3rd Floor Area – Building A	$55,630	Value of increase calculated based on $5.00 per square foot of area (11,126 square feet).
Community Benefits Required	3rd Floor Area – Building B	$64,535	Value of increase calculated based on $5.00 per square foot of area (12,907 square feet).
Community Benefits Required	3rd Floor Area – Building C	$48,630	Value of increase calculated based on $5.00 per square foot of area (9,726 square feet).
Total Area of 3rd floor	33,759 square feet	**$168,795**	Sum of values of community benefits, as provided by applicant, staff has determined are applicable
Community Benefits Requirement Calculation			
Community Benefit Requirement = Area of 3rd Floor (gross floor area)	65,860 square feet x $5.00/square foot	**$329,300**	Because project is residential in nature the per unit cost of the community benefit requirement could be broken down by dividing the overall community benefit dollar requirement by the number of units proposed for the 3rd floor = $329,300/72 units = **$4,573.61/unit**

Category	Community Benefit Provided	$ Value	Notes
Excess value of community benefit provided by project		$525,000 - $329,300 = **$195,700**	The $195,700 value represents the value of community benefits being incorporated into the project in excess of that required to satisfy the requirement.

Staff has concluded that with the incorporation of the outlined benefits, the project has satisfied the requirements for community benefits. Conditions of approval are being recommended to ensure that community benefits listed are all incorporated during the construction phase of the project and retained and maintained for the life of the development.

The analysis has shown that all of the qualitative criteria outlined in the Land Development Regulations have been satisfied for the proposed development. The proposed development and site improvements comply with all development regulations of the RPD and applicable sections of the development regulations. The redeveloped site will add to the supply of available residential housing opportunities available in the City.

CONSEQUENT ACTION:

The Planning & Zoning Board is acting in an advisory role for this Residential Planned Development, which includes the permitted uses, development standards, and master development for the Villages II at Lake Osborne project. The Planning & Zoning Board is being asked to make a recommendation on these items for the City Commission's consideration.

The Planning & Zoning Board's decision on the community benefits pursuant to the Sustainable Bonus Incentive provision for additional height/stories will be final and the site plan. However, approvals will be contingent on the City Commission approving the Residential Planned Development.

The applicant does have the option to appeal any final decision of the Planning & Zoning Board to the City Commission.

RECOMMENDATION:

Staff recommends the following on the various requests:

- Staff recommends that the Planning & Zoning Board recommend **APPROVAL** to the City Commission on the Village II at Lake Osborne Residential Planned Development to establish uses and development standards and to incorporate the master development plan;

- Staff recommends that the Planning & Zoning Board **APPROVE** the project's proposed additional height and third story as the requirement for providing quantifiable community benefits has been met, contingent on the adoption of the RPD Ordinance by the City Commission;

- Staff recommends that the Planning & Zoning Board **APPROVE** the Site Plan for a the proposed 118 unit apartment complex located on a 4.71 acre site at 2430 Lake Worth Road in the MU-W/RPD District subject to the recommended conditions of approval and contingent on the adoption of the RPD Ordinance by the City Commission.

POTENTIAL MOTIONS:

Should the Planning & Zoning Board concur with staff's recommendation the following motions are recommended:

"PZB PROJECT NUMBER 13-1000002:

- I MOVE TO RECOMMEND THAT CITY COMMISSION APPROVE the Village II at Lake Osborne Residential Planned Development to establish uses and development standards and to incorporate the master development plan for the Village II at Lake Osborne RPD;

- I MOVE TO APPROVE the applicant's request to incorporate additional height and a third story according to the community benefits pursuant to the provision of the Sustainable Bonus Incentive Program, and contingent on the adoption of the Village II at Lake Osborne RPD Ordinance by the City Commission"; and

- I MOVE TO APPROVE the Site Plan for a 118 unit apartment complex located on a 4.71 acre site at 2430 Lake Worth Road in the MU-W/RPD District subject to the recommended conditions of approval and contingent on the adoption of the Village II at Lake Osborne RPD Ordinance by the City Commission".

LOCATION MAP

Attachments:

A. Conditions of Approval
B. Justification Statement;
C. Proposed Plans
    a. Survey
    b. Site Plan
    c. Architectural Plans
    d. Photometric Plan
    e. Landscape Plan
    f. Preliminary Civil Plans
    g. Traffic Statement
    h. Traffic Concurrency letter from Palm Beach County Traffic Engineering
    i. Reduced Parking Statement
D. Color Renderings
E. The Village II at Lake Osborne RPD Ordinance
F. Community Benefits outline from applicant

Department of Engineering and Public Works
P.O. Box 21229
West Palm Beach, FL 33416-1229
(561) 684-4000
FAX: (561) 684-4050
www.pbcgov.com

Palm Beach County Board of County Commissioners

Priscilla A. Taylor, Mayor

Paulette Burdick, Vice Mayor

Hal R. Valeche

Shelley Vana

Steven L. Abrams

Mary Lou Berger

Jess R. Santamaria

County Administrator

Robert Weisman

"An Equal Opportunity Affirmative Action Employer"

printed on recycled paper

September 24, 2014

Mr. William Waters
Director – Community Development
City of Lake Worth
1900 2nd Avenue North
Lake Worth, FL 33461

RE: The Villages II at Lake Osborne
Project #: 140911
TRAFFIC PERFORMANCE STANDARDS REVIEW

Dear Mr. Waters:

The Palm Beach County Traffic Division has reviewed the traffic study for the proposed residential project entitled **The Villages II at Lake Osborne,** pursuant to the Traffic Performance Standards in Article 12 of the Palm Beach County Unified Land Development Code. This project was previously approved for 124 DU Multi-Family Residential Development in 2013. The current proposal is to reduce the units to 118. The project is summarized as follows:

Location:	North side of Lake Worth Road, east of Congress Avenue, south of 2nd Avenue N.
Municipality:	Lake Worth
PCN #:	38-43-44-20-01-111-0020, 38-43-44-20-01-111-0030, 38-43-44-20-01-110-0010, 38-43-44-20-01-110-0020, 38-43-44-20-01-110-0040.
Existing Uses:	Vacant
Existing Approva;	124 MF Residential Units (Apartments)
Proposed Uses:	118 MF Residential Units (Apartments)
Net New Daily Trips:	-42
Net New PH Trips:	-3 AM and -4 PM
Build-Out:	December 31, 2017

Based on our review, the Traffic Division has determined the proposed residential project meets the Traffic Performance Standards of Palm Beach County. However, since the entrance on Lake Worth Rd will be a right-in/right-out only, a u-turn analysis is required at the first median breaks, both west and east of this driveway entrance to determine the adequacy of the left turn bay length at those two locations on Lake Worth Rd. The City is advised not to approve this project until these u-turn analysis has been submitted and reviewed and any potential required improvements, if any, have been identified No building permits are to be issued by the City after the build-out date specified above. The County traffic concurrency approval is subject to the Project Aggregation Rules set forth in the Traffic Performance Standards Ordinance. If you have any questions regarding this determination, please contact me at 561-684-4030 or e-mail to qbari@pbcgov.org.

Sincerely,

Quazi Bari, P.E.
Senior Professional Engineer – Traffic Division

QB:sf
ec: Addressee
Robert F. Rennebaum P.E., - Simmons & White, Inc.,
Kyle Duncan – Simmons & White, Inc.,
Steve Bohovsky - PBC Traffic Division

File: General - TPS - Mun - Traffic Study Reviews
F:\TRAFFIC\ma\Admin\Approvals\2014\140911.docx

Vote: Ayes: Mr. Rice; Mr. Humm; Ms. LaTorre; Mr. Sherwin; Mr. Marotta; Ms. Brown; and Mr. Zacks.
Nays: None
Motion carried seven (7) to zero (0).

Action: Motion made by Mr. Sherwin with a second by Ms. Brown that the Board approve the request for Variance from Section 23.4-4 of the LDRs related to Fence location for industrial uses to allow the fence to be located 10-feet from the property line as opposed to the required 20-foot set-back established by the Land Development Regulations.
Vote: Ayes: Mr. Rice; Mr. Humm; Ms. LaTorre; Mr. Sherwin; Mr. Marotta; Ms. Brown; and Mr. Zacks.
Nays: None
Motion carried seven (7) to zero (0).

c. PZB 13-01000002, Village of Lake Osborne; Consideration of a two-part request by Lawrence Kramer, Agent, for the following:
(1)A recommendation to the City Commission for a Residential Planned Development (RPD) (Village II, at Lake Osborne) to establish uses and development standards for the Village II at Lake Osborne RPD and to incorporate the master development plan pursuant to Section pursuant to Section 23.2-8 of the LDRs;
(2) Consideration of a request for Major Site Plan Approval for a 118 unit apartment complex.
The project includes a request for consideration of a Sustainable Bonus Incentive. The subject property is a +/- 4.71 acre site located at 2430 Lake Worth Road in the MU-West Zoning District, with a Future Land Use Map designation of Mixed Use West (MU-W); PCN#:38-43-44-20-01-110-0010

1. Staff Comments: Mr. Thompson; Mr. Ducoste; Mr. Waters 1:30:00
   - Mr. Thompson: Introduced the request for planned development to construct market rate work-force housing; reviewed the regulations for planned development and intent to provide benefits in a smaller land area; stated that regulations for lot size were met at 94% of the required; stated that circumstances allowed for approval of the request; described the residential uses which surrounded the site; stated that Staff recommended that Board recommend approval of the request for RPD to the Commission
   - Mr. Ducoste: Proposed an additional Condition of Approval to ensure limitation to number of vehicles which could be allowed by tenants Applicant Comments: Lawrence Kramer
   - Mr. Kramer: Stated that the project was similar to the project Village of Lake Worth; and that a second traffic study had been done
   - Mr. Ernesto: Stated that on average each unit had 1.8 spaces; extensive studies had been done to ensure that adequate parking was provided for the site; visitors parking spaces were
2. Board Comments/Questions: Location of over-flow parking; amount of visitor parking; request for clarification of lot coverage; request for clarification of height measurement; request for clarification of amount of parking provided; whether additional parking spaces; request for clarification of how addition of a

wall could be considered a Community Benefit; and comment that proposed benefits were of no value to community; comment that people are accustomed to thins a certain way, but as communities grow development regulations change to accommodate the growth; and request for clarification of how Sustainability Bonus worked when additional height was permitted by right

3. Applicant Comments: Mr. Kramer: Described site design and amenities; and stated that a 20-ft high wall would be erected between the property and the residential property immediately to the east of the property; stated that the site had been designed based on comments of residents to the east; agreement to include additional parking spaces along 2nd Ave North;
4. Staff Comments: Mr. Waters: Addressed Board questions related to parking, chronic nuisance, and potential for additional parking space along 2nd Ave North; that parking issues could be addressed by PBSO; plan for site was to make the site a gated community; explanation of Community Benefit as $5 of demonstrated community benefit per square foot of each additional floor
5. Ms. Alterman: Suggested a revised site plan showing additional parking spaces along 2nd Ave North 2:06:00
6. **Action**: Made by Mr. Humm with a second by Mr. Zacks to recommend approval to City Commission of PZB 13-01000002, Village II at Lake Osborne to establish uses and to incorporate master plan for the Village II at Lake Osborne RPD as based upon the findings that the site was less than five acres
   a. Public Comments:
      - Judy McGrath, resident of Lago Lucerne; stated that she appreciated the changes that had been incorporated into the original plan; asked for clarification of dumpster locations; and requested explanation of limitations to the number of residents allowed per living space
      - Dick Newton, resident of Lago Lucerne: Requested explanation of dumpster operations
      - Bob Strassburger, resident board member of Lago Lucerne: Questioned methods to mitigate noise from air conditioning units; and asked whether lake would be aerated
      - John; Spoke to the need for structured parking in conjunction with new development

   Vote: Ayes: Mr. Rice; Mr. Humm; Ms. LaTorre; Mr. Marotta; Ms. Brown; and Mr. Zacks.
   Nays: Mr. Sherwin
7. **Action**: Motion made by Mr. Marotta with a second by Ms. Brown, the applicant's request to incorporate additional height and a third story according to the community benefits pursuant to the provision of the Sustainable Bonus Incentive Program, and contingent on the adoption of the Village II at Lake Osborne RPD Ordinance by the City Commission

   Vote: Ayes: Mr. Rice; Mr. Humm; Ms. LaTorre; Mr. Sherwin; Mr. Marotta; Ms. Brown; and Mr. Zacks.
   Nays: None

   Motion carried seven (7) to zero (0).

I MOVE TO APPROVE the applicant's request to incorporate additional height and a third story according to the community benefits pursuant to the provision of the

Sustainable Bonus Incentive Program, and contingent on the adoption of the Village II at Lake Osborne RPD Ordinance by the City Commission

8. **Action**: Motion made by Ms. Brown with a second Mr. Humm that the Board approve the Site Plan for a 118 unit apartment complex located on a 4.71 acre site at 2430 Lake Worth Road in the MU-W/RPD District subject to the recommended conditions of approval and contingent on the adoption of the Village II at Lake Osborne RPD Ordinance by the City Commission; with the additional Condition of Approval that prior to approval of the RPD by the City Commission, the Applicant shall submit a revised site plan incorporating additional parallel parking along 2nd Ave North.

- **Vote**: Ayes: Mr. Rice; Mr. Humm; Ms. LaTorre; Mr. Marotta; Ms. Brown; and Mr. Zacks
  Nays: Mr. Sherwin
  Motion carried six (6) to one (1).

F. Unfinished Business:
- None

G. New Business:
- None

6. Planning Issues: Mr. Waters 2:15:00
   - Addressed pending development applications
   - Discussed future planning which included planned districts
7. Public Comments:
   - None
8. Departmental Reports: The following are the comments of Mr. Waters:
   - Value Place: Permit had been issued; and Applicant was ready to begin construction
   - Gulfstream Hotel: Applicants had applied for and received demolition permits for interior and pool structure; and would be applying for demolition of out-lying buildings
   - Birthday Cake House: The property had been chosen for a Red Cross Designing show-house which was slated for March of 2015; which could potentially bring thousands of people to Lake Worth; and the event would follow the annual Street Painting Festival
9. Board Member Comments:
   - Mr. Sherwin: Suggested re-orienting building lines for new construction to run east west in order to take advantage of Florida's readily available solar power
   - Mr. Rice: Stated that he had driven down Boutwell Rd. and was pleased with the development progress; and stated that it would be helpful to have the back-up materials sooner
10. Adjournment
    a. **Action**: Motion to adjourn made by Mr. Marotta with a second by Mr. Humm
    Vote: Ayes: Mr. Rice; Mr. Humm; Ms. LaTorre; Mr. Sherwin; Mr. Marotta; Ms. Brown; and Mr. Zacks
    Nays: None
    Motion carried seven (7) to zero (0)
    Meeting adjourned at 9:00 pm

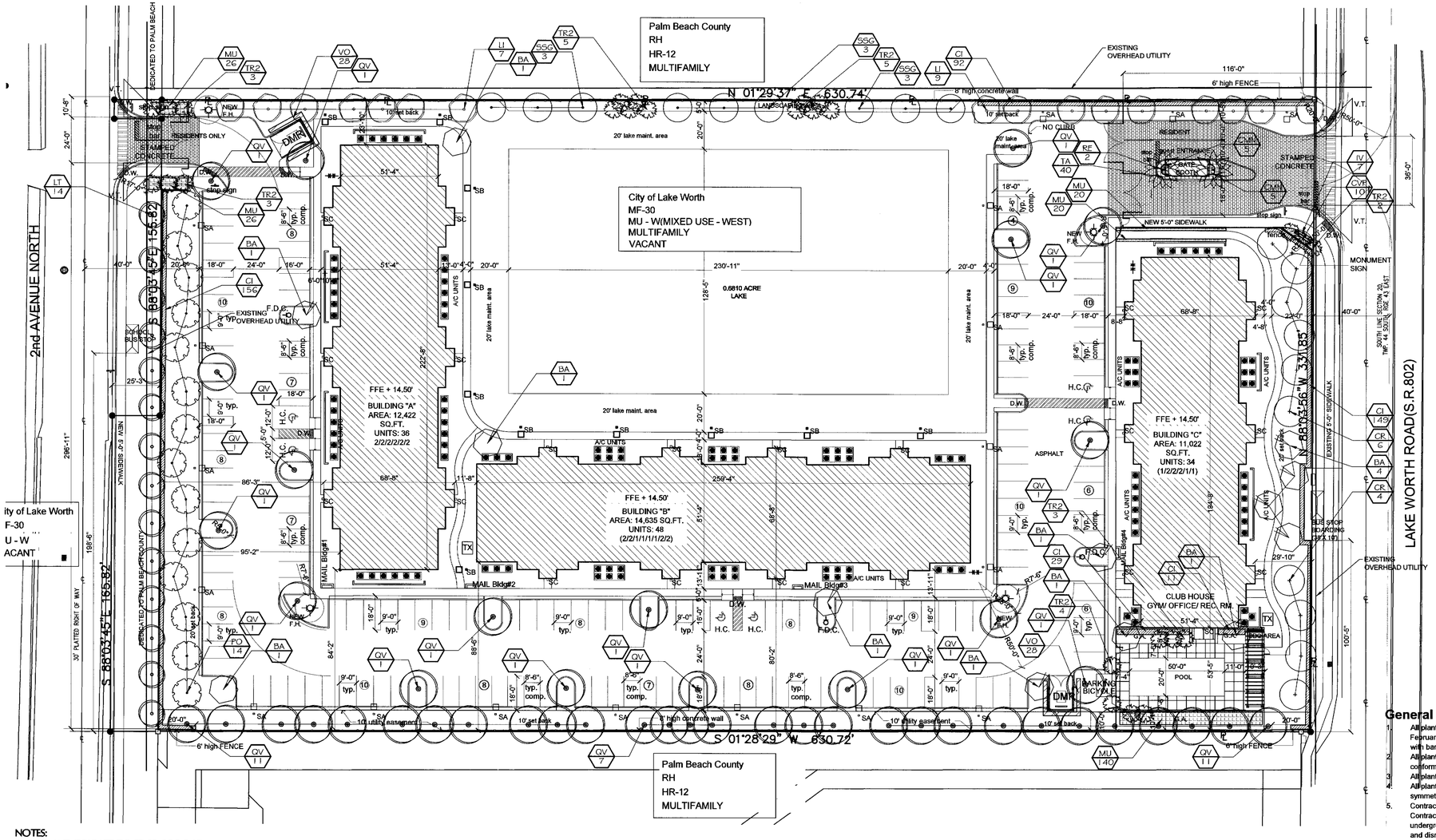

NOTES:
1. SOD AND IRRIGATE TO EDGE OF ROAD.
2. TREE REMOVAL PERMIT IS REQUIRED BY CITY PRIOR TO REMOVAL OF ANY TREES ON SITE.
3. ALL MECHANICAL EQUIPMENT SHALL BE SCREENED FROM VIEW WITH APPROPRIATE SHRUB MATERIAL.
4. TREES SHALL BE PLANTED A MINIMUM OF 15' FROM LIGHT POLES.

PLANT_SCHEDULE

TREES	QTY	BOTANICAL NAME	COMMON NAME	CONT	DBH	SIZE	NATIVE	DROUGHT
CR	10	Clusia Rosea	Pitch Apple	FG/B&B	3" DBH	14'-16' HT x 5' SPR	Yes	High
PO	14	Podocarpus macrophyllus	Yew Pine	FG/B&B	3" DBH	12' HT. x 5' SPR.	No	Medium
QV	47	Quercus virginiana	Southern Live Oak	FG/B&B	3" DBH	16'-20' HT x 6' SPR	Yes	High
FLOWERING TREES	QTY	BOTANICAL NAME	COMMON NAME	CONT	DBH	SIZE	NATIVE	DROUGHT
BA	13	Bulnesia arborea	Verawood	FG/B&B	3" DBH	14'-16' HT x 5' SPR	No	Medium
LT	14	Lagerstroemia indica x 'Tuscarora'	Crape Myrtle Coral Pink	FG/B&B	3" DBH	12' HT x 4' SPR, Single Trunk	No	High
LI	16	Lagerstroemia indica 'Natchez'	Crape Myrtle	FG/B&B	3" DBH	14' HT x 4' SPR	No	High
SSG	9	Senna surattensis	Glaucous Cassia	FG/B&B	3" DBH	12' HT x 5' SPR	No	Medium
PALM TREES	QTY	BOTANICAL NAME	COMMON NAME	CONT		SIZE	NATIVE	DROUGHT
RE	2	Roystonea elata	Florida Royal Palm	FG/B&B		18' CT, Matched	Yes	Medium
TR2	25	Thrinax radiata	Florida Thatch Palm	FG/B&B		16' OA	Yes	High
SHRUB AREAS	QTY	BOTANICAL NAME	COMMON NAME	CONT		SIZE	NATIVE	DROUGHT	SPACING
CMN	10	Carissa macrocarpa	'Emerald Blanket' Dwarf Natal Plum	3 Gal.,		18"HT x 18"SPR	No	Medium	24" o.c.
CI	437	Chrysobalanus icaco 'Red tip'	Red Tip Cocoplum	3 Gal.,		24"HT x 24"SPR	Yes	High	24" o.c.
CVP	10	Codiaeum variegatum	Croton	3 Gal.,		24"HT x 24"SPR	No	Medium	24" o.c.
IV	7	Ilex vomitoria 'Shillings'	Dwarf Yaupon Holly	3 Gal.,		12"HT x 12"SPR	Yes	High	18" o.c.
MU	240	Muhlenbergia capillaris	Pink Muhly	3 Gal.,		18"HT x 18"SPR	No	High	24" o.c.
VO	56	Viburnum odoratissimum	Sweet Viburnum	3 Gal.,		24"HT x 24"SPR	No	Medium	24" o.c.
GROUND COVERS	QTY	BOTANICAL NAME	COMMON NAME	CONT		SIZE	NATIVE	DROUGHT	SPACING
TA	40	Trachelospermum asiaticum 'Minima'	Dwarf Minima Jasmine	1 Gal.,		4"HT x 12"SPR @	No	Medium	18" o.c.

Tree Requirements

Description		Calculation	Qty Required	Qty Provided
Section 23.6-1 (f) 2a				
North	2nd Avenue North	321.6'/ 20'	17	28
South	Lake Worth Road	100'/ 20'	5	5
Section 23.6-1 (f) 2b				
West		500'/ 20'	25	25
East		80'/20'	4	4
		170'/ 20'	9	9
Section 23.6-1(f) 3				
Interior Islands			23	23
Total Site trees			80	125
Trees Building Foundation				42
Total trees			80	287

General Notes:

1. All plant material shall be Florida No. 1 or better as given in the current Grades and Standards for Nursery Plants, 2nd Edition, February 1998, Florida Department of Agriculture and Consumer Services, Division of Plant Industry. Co-dominant trees and trees with bark inclusion will not be accepted.
2. All plant materials shall be subject to inspection and approval by the Landscape Architect at place of growth and upon delivery for conformity to specification.
3. All plants shall be true to species and variety and shall conform to measurements specified.
4. All plants shall be exceptionally heavy, symmetrical, tight knit and so trained in appearance as to be superior to form, branching and symmetry.
5. Contractor shall notify S.U.N.S.H.I.N.E. (1-800-432-4770) for locations of existing utility lines 48 hours prior to beginning work. Contractor shall verify location of all utility lines and easements prior to commencing any work. Excavation in the vicinity of underground utilities shall be undertaken with care and by hand, if necessary. The Contractor bears full responsibility for this work and disruption or damage to utilities shall be repaired immediately at no expense to the Owner.
6. Grade B+, Arsenic Free, shredded Melaleuca or Eucalyptus minimum 3" deep, shall be used in all mass planting beds and for individual tree pits. All trees shall have a mulch ring with a minimum depth of 3" and a diameter of 3'-4' around their base. All mulch shall be kept 2" from the base of all plant material. Mulch beds shall be a minimum of 12" wider than plants measured from outside edge of foliage.
7. Sod shall be St. Augustine 'Floratam' solid and free of weeds, insects, fungus and disease, laid with alternating and abutting joints.
8. All tree excavation pits shall be a minimum of 2 times the size of the rootball and planting soil must be clean. All trees and shrubs shall be backfilled with a suitable planting soil consisting of 50 percent sand and 50 percent approved compost. (Note: Field observation and soil analysis may require a different soil composition to be provided.) All plant materials shall be planted with a minimum of six to twelve inches of this planting soil around and beneath the root ball. Refer to planting details. Planting beds and planting soil shall be free from road, pea, egg, or colored rock, building materials, debris, weeds, noxious pests and disease.
9. All sodded areas to have a minimum of 2" of planting soil as described in note #8.
10. All trees shall be warranted by the Contractor and will be healthy and in flourishing condition of active growth on year from date of final acceptance.
11. All shrubs, groundcovers, vines and sod shall be fully warranted for 1 year under same condition as above.
12. All synthetic burlap, synthetic string or cords or wire baskets shall be removed before any trees are planted. All synthetic tape shall be removed from trunks, branches, e.t.l. before inspection. The top 1/3 of any natural burlap shall be removed or tucked into the planting hole before trees are backed filled. Planting soil to be backfilled into plant pits by washing in.
13. All trees, palms and other plants shall be planted with the top of their root balls no deeper than the final grade surrounding the planting area. Root balls may be planted up to 10% above grade.
14. In areas where paved surfaces abut sod or mulch, the final grade level of both surfaces should be even.
15. All planting shall be installed with fertilizer and/or fertilizer tablets at time of planting.
16. All planting shall be installed in a sound, workmanlike manner and according to good planting procedures. Installation shall include watering, weeding, fertilizing, mulching, selective pruning, and removal of refuse and debris on regular basis so as to present a neat and well kept appearance at all times.
17. All landscape and sod area shall have an automatic irrigation system installed. Coverage should be 100% overlap to all landscape and sod areas and spray onto hardscap is not permitted. Sodded areas and shrub/groundcover beds should be on separate irrigation zones for a more efficient system. Irrigation system shall be installed with a rainswiLih device.
18. All landscape shall be installed in compliance with all local codes.
19. The plan shall take precedence over the plant list, should there be any discrepancy between the two.
20. Any plant subsitutions must be approved by the City prior to installation.

NOTE: NO WELLINGTON TAPE OR OTHER NON-BIODEGRADABLE MATERIALS SHALL COME INTO CONTACT WITH THE TREE.

NOTES:
1. CONTAINER GROWN SHRUBS - LOOSEN ROOTS AT EDGE OF ROOTBALL.
2. BALL IN BURLAP SHRUBS - CUT & REMOVE BURLAP FROM TOP 1/3 OF ROOTBALL.
3. WHERE SHRUBS & GROUNDCOVER ARE PLANTED IN BEDS, EXCAVATE ENTIRE BED & FILL W/ PLANTING BACKFILL MIXTURE.
4. DEPTH OF PLANTING PIT SHALL NOT BE LESS THAN 1-1/2 TIMES THE DEPTH OF THE ROOTBALL.

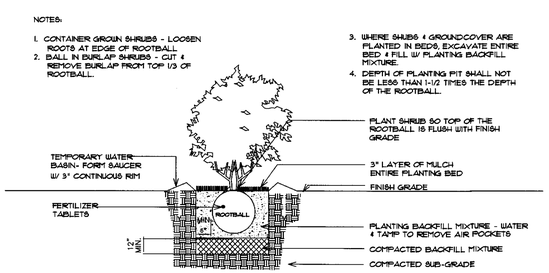

SHRUB PLANTING DETAIL

NOTE:
ALL STAKING & GUYS SHALL BE REMOVED APPROXIMATELY 9 MONTHS AFTER PLANTING OR AS DIRECTED BY LANDSCAPE ARCHITECT

NOTES:
1. SET TREE PLUMB & TREE TO GRADE
2. PLANT TREES SO THAT THE TOP OF ROOTBALL IS FLUSH WITH FINISH GRADE
3. ALL STAKING & GUYS SHALL BE REMOVED APPROXIMATELY 9 MONTHS AFTER PLANTING OR AS DIRECTED BY LANDSCAPE ARCHITECT

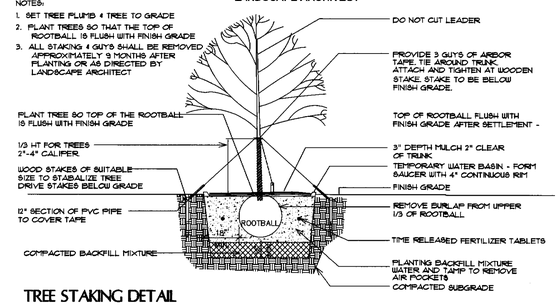

TREE STAKING DETAIL

NOTES:
1. PLANT PALMS SO THAT THE TOP OF ROOTBALL IS FLUSH W/ FIN. GRADE
2. SET PALMS PLUMB & TRUE TO GRADE
3. TIE FRONDS DURING TRANSPORTATIONS TO PROTECT GROWING TIPS. DO NOT TRIM ENDS
4. FOR B & B PALMS CUT AND REMOVE BURLAP FROM TOP 1/3 ROOTBALL
5. "HURRICANE CUT" SABAL PALM FRONDS

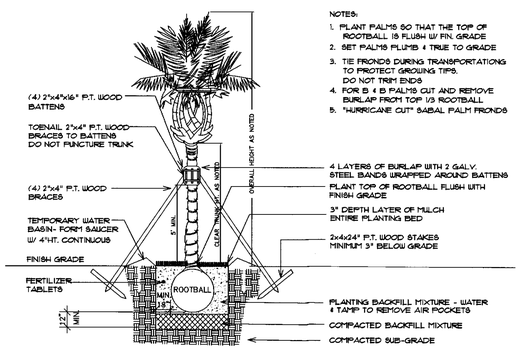

PALM PLANTING DETAIL

Know what's below. Call before you dig.

Scale: 1" =30'-00"

North

0' 15' 30' 60' 90'

1 / L-1 PROPOSED LANDSCAPE PLAN

REVISIONS:

1	Site and Planting	6-11-2014
2	Site and Planting	8-22-2014
3	Site and Planting	10-6-2014

Kimberly Moyer, RLA
Landscape Architecture
(954) 492-9609
Lic. No. #LA0000952
10-6-14

SOUTHEAST ARCHITECTS SERVICES, INC.
4316 WEST BROWARD Blvd. Ste. 3 # Plantation, Fl. 33317
(954) 797-2821 - FAX: (954) 797-2847
LIC. # AA-C001953

"THE VILLAGE II" at LAKE WORTH
2340 LAKE WORTH ROAD
LAKE WORTH, FL
33461

DRAWN: K.M.
DATE: 9-19-13
PROJECT NUMBER: 8-13
SHEET NUMBER: L-1
1 OF: 1

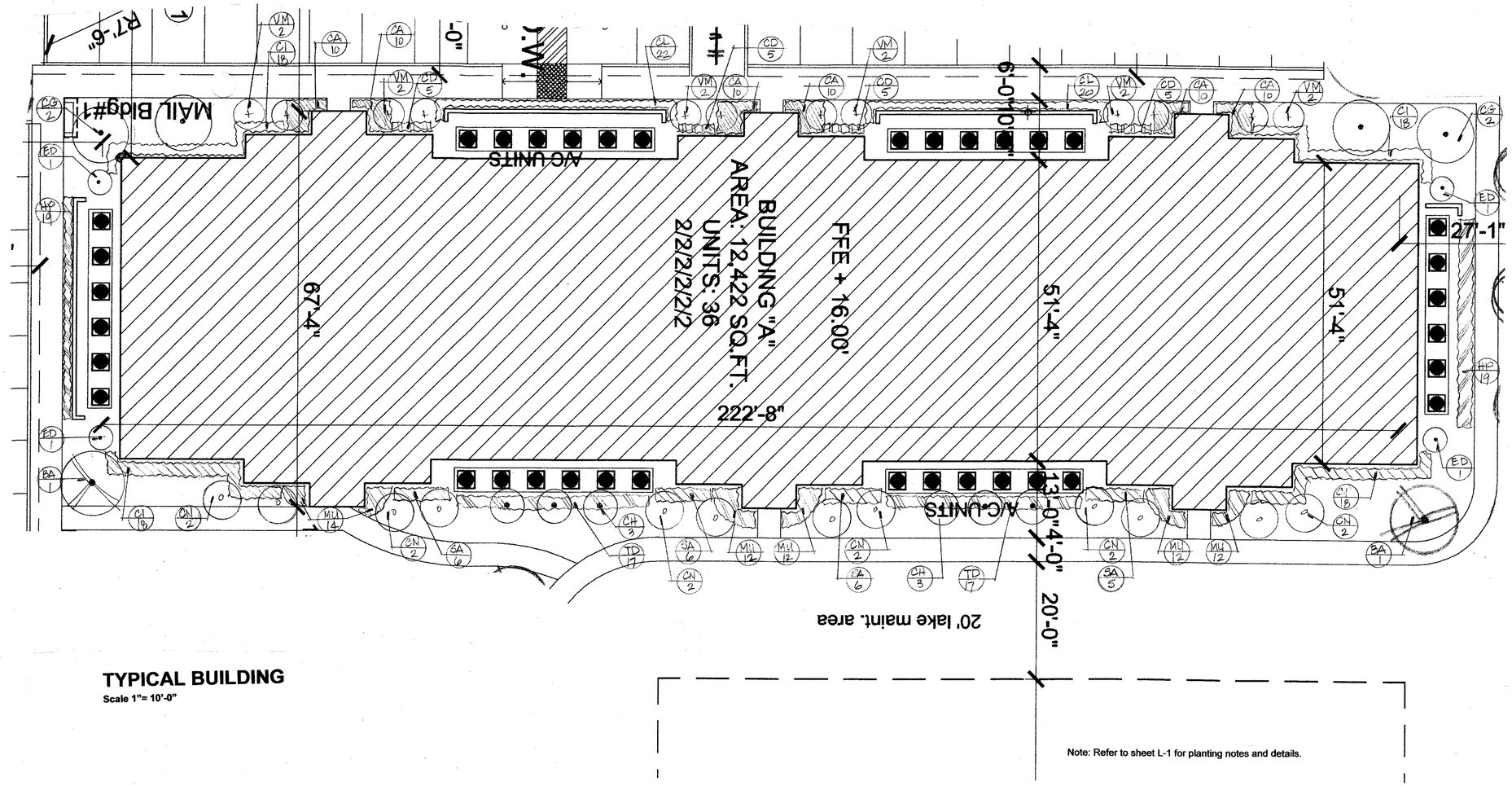

TYPICAL BUILDING

Scale 1"= 10'-0"

Note: Refer to sheet L-1 for planting notes and details.

Plant List (Typical Building)

Sym	Qty	Botanical/ Common Name	Size
VM	12	Veitchia montgomeryana/ Montgomery Palm	16'-18' OA HT
CN	12	Cocos nucifera 'Green Malayan'/ Coconut Palm	8' CT
BA	2	Bulnesia arbórea/ Verawood	12' Ht x 5' Spr, 2" Cal
CG	4	Caesalpinia grandadillo/ Bridalveil	10' Ht x 5' Spr, 2" Cal
ED	4	Elaeocarpus decipiens/ Japanese Blueberry	6' x 3'
CH	6	Calliandra haematocephala/ Red Powder Puff	6' Ht x 3' Spr, multi trunk
TD	34	Tripscaum dactyloides/ Fakahatchee Grass	24" x 24", 24" O.C.
CL	42	Clusia guttifera/ Small Leaf Clusia	24" x 20", 24" O.C.
SA	23	Schefflera arboricola 'Trinette'/ Var. Arboricola	20" x 20', 24" O.C
CI	72	Chrysobalanus icaco/ Cocoplum	24" x 24", 24" O.C.
HP	38	Hamelia patens 'Compacta'/ Firebush	24" x 24", 24" O.C.
CA	60	Carissa macrocarpa 'Emerald Blanket'/ Natal Plum	18" x 18", 24" O.C.
CD	20	Codiaeum variegatum/ Croton	24" x 24", 24" O.C.
MU	62	Muhlenbergia capillaris/ Muhly Grass	18" x 18", 24" O.C.
Sod		St Augustine 'Floratam'	
Mulch		Shredded Melaleuca or Eucalyptus	

REVISIONS:

Kimberly Moyer, RLA
Landscape Architecture
(954) 492-9609
Lic. No. #LA0000952

SOUTHEAST
ARCHITECTS SERVICES, INC.
4316 WEST BROWARD Blvd. Ste. 3 # Plantation, FL 33317
(954) 797-2821 - FAX (954) 797-2847
LIC. # AA-C001953

"THE VILLAGE II" at LAKE WORTH
2340 LAKE WORTH ROAD
LAKE WORTH, FL 33461

DRAWN: K.M.
DATE: 2/25/14
PROJECT NUMBER: 8-13
SHEET NUMBER: L-2
1 OF: 1

24 X 36 PRINTED ON NO. 1002H CLEARPRINT®

SITE DATA TABLE			
ZONING AND FLU		EXIST'G	PROPOSED
ZONING DISTRICT		MF-30	MF-30
FUTURE LAND USE		MU - W	MU - W
EXIST'G USE		VACANT	
PROPOSED USE			MULTIFAMILY
DEVELOPMENT STANDARD		REQUIRED	PROPOSED
LOT SIZE(ACREAGE AND SF)		1450x118=171,000 sq.ft.	5.13 AC 223,513 SQ FT
LOT WIDTH		50'	331.85'
BLD'G HEIGHT	PRIMARY	30'(MAX 2 STORIES)	43 '- 9" 3 STORIES
	SECONDARY	+35'(MAX6 STORIES)	
SETBACKS	FRONT	20' - 0"	29' - 10"
	REAR	20' - 0"	86' - 3"
	SIDE	10' - 0"	53' - 5"
	SIDE	10' - 0"	23' - 10"
LIVING AREA	1 BDR UNIT	600 SQ.FT.	616 SQ. FT.
	2 BDR UNIT	750 SQ.FT.	855 SQ. FT.
ACCESSORY STRUCTURE LIMITATION			
IMPERMEABLE SPACE COVERAGE(%)		55%	52%
BLDG COVERAGE(%)			18%
MAX. WALL HEIGHT @ SETBACK		6'-0" HI	8'-0" HI
F.A.R. LIMITATION		.55	.51
PARKING		212 SPACES	170 SPACES

NOTE: WIND LOAD DESIGN, 170 MPH, 3 SEC. GUST. IMPORTANCE FACTOR "1" EXPOSURE "C"

PARKING REQUIRED:

1-BDRM	1.0 SPACES / UNIT	40	SPACES
2-BDRM	2.0 SPACES / UNIT	156	SPACES
GUEST SPACES		8	SPACES
GUEST SPACES OVER 60 D.U.'S		8	SPACES
TOTAL		212	SPACES

REQUIRED: 212 SPACES

PROPOSED PARKING STANDARD:

1 BEDROOM UNITS: 40
2 BEDROOMS UNITS: 78
TOTAL 118

1-BDRM	1.0 SPACES / UNIT	40	SPACES
2-BDRM	1.5 SPACES / UNIT	117	SPACES
TOTAL		157	SPACES

TYPICAL PARKING:	100	SPACES
COMPACT PARKING:	70	SPACES
PROVIDED:	170	SPACES

DEVELOPMENT STANDARD	REQUIRED	PROPOSED	REQUESTED (DEVIATION / Δ)
1. MINIMUM AREA REQUIRED	5.0 ACRES	GROSS NET 5.13 ACRES / 4.71 ACRES	NET AREA 0.39 ACRES
2. PARKING SPACE SIZE	9.5' x 19'-0"	9'-0" x 18'-0"	0.5' x 1'-0"
COMPACT SPACE		8'-6" x 18'-0"	
3. PARKING	212 SPACES	169 SPACES	42 SPACES
4. PRIVACY WALL	6'-0" HI	8'-0" HI	INCREASE 2'-0"
5. THOROUGHFARE DESIGN GUIDELINE	TO PROVIDE (4) 5'-0" WALKS TO PUBLIC SIDE WALK ON LAKE WORTH RD	SECURE DEVELOPMENT WITH ONE POINT OF ACCESS ONE 6'-0" WALK	OMIT 3 ADDITIONAL POINTS OF ACCESS TO LAKE WORTH ROAD

LEGEND

- NEW FIRE HYDRANT
- FIRE DEPT. CONECT.
- DOBLE DET. VALVE
- A/C UNIT
- MAIL BOX EACH BLDG.

LOCATION MAP
SCALE: N.T.S.

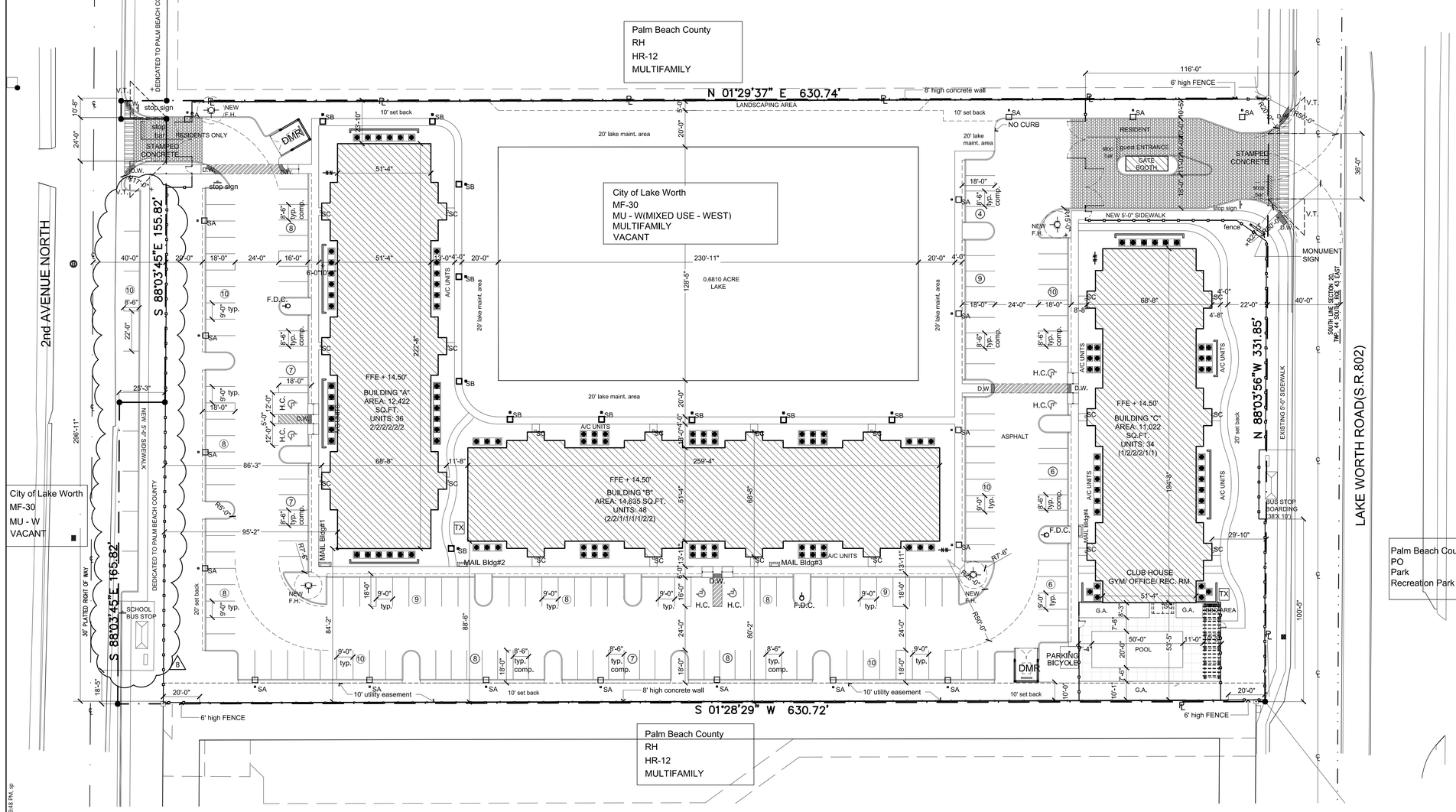

PROPERTY DESCRIPTION

PARCEL 1:
THE WEST HALF (W1/2) OF THE EAST HALF (E1/2) OF LOT 110, MODEL LAND COMPANY'S SUBDIVISION, OF SECTION 20, TOWNSHIP 44 SOUTH, RANGE 43, ACCORDING TO THE PLAT THEREOF, AS RECORDED IN PLAT BOOK 5, AT PAGE 79 OF THE PUBLIC RECORDS OF PALM BEACH COUNTY, FLORIDA, LESS AND EXCEPTING THE WEST 70 FEET OF THE NORTH 145 FEET OF THE WEST HALF (W1/2) OF THE EAST HALF (E1/2) OF SAID LOT 110 AND LESS THE ROAD RIGHT OF WAY.

PARCEL 2:
THE EAST 15 FEET OF THE WEST 70 FEET OF THE NORTH 145 FEET OF THE WEST HALF (W1/2) OF THE EAST HALF (E1/2) OF LOT 110, MODEL LAND COMPANY'S SUBDIVISION, OF SECTION 20, TOWNSHIP 44 SOUTH, RANGE 43, ACCORDING TO THE PLAT THEREOF, AS RECORDED IN PLAT BOOK 5, AT PAGE 79 OF THE PUBLIC RECORDS OF PALM BEACH COUNTY, FLORIDA.

PARCEL 3:
THE WEST 55 FEET OF THE NORTH 145 FEET OF THE WEST HALF (W1/2) OF THE EAST HALF (E1/2) OF LOT 110, MODEL LAND COMPANY'S SUBDIVISION, OF SECTION 20, TOWNSHIP 44 SOUTH, RANGE 43, ACCORDING TO THE PLAT THEREOF, AS RECORDED IN PLAT BOOK 5, AT PAGE 79 OF THE PUBLIC RECORDS OF PALM BEACH COUNTY, FLORIDA.

PARCEL 4:
THE EAST QUARTER (E1/4) OF TRACT 110, MODEL LAND COMPANY'S SUBDIVISION, OF SECTION 20, TOWNSHIP 44 SOUTH, RANGE 43, ACCORDING TO THE PLAT THEREOF, AS RECORDED IN PLAT BOOK 5, AT PAGE 79 OF THE PUBLIC RECORDS OF PALM BEACH COUNTY, FLORIDA.

PARCEL 5:
THE SOUTH 278 FEET OF THE WEST HALF (W1/2) OF TRACT 111, AND ALSO THE EAST 10 FEET OF THE WEST HALF (W1/2) OF TRACT 111, MODEL LAND COMPANY'S SUBDIVISION, OF SECTION 20, TOWNSHIP 44 SOUTH, RANGE 43, ACCORDING TO THE PLAT THEREOF, AS RECORDED IN PLAT BOOK 5, AT PAGE 79 OF THE PUBLIC RECORDS OF PALM BEACH COUNTY, FLORIDA.
TOGETHER WITH:
LANDS DESCRIBED IN OFFICIAL RECORDS BOOK 19834, PAGE 1500, PALM BEACH COUNTY RECORDS, LESS THE NORTH 25.00 FEET AND THE SOUTH 25.00 FEET THEREOF FOR ROAD RIGHT OF WAY.
TOGETHER WITH:
LANDS DESCRIBED IN OFFICIAL RECORDS BOOK 19336, PAGE 748, PALM BEACH COUNTY RECORDS.

PARCEL 6:
A PARCEL OF LAND LYING IN THE WEST 1/2 OF LOT 111 OF MODEL LAND COMPANY'S SUBDIVISION OF SECTION 20, TOWNSHIP 44 SOUTH, RANGE 43 EAST, ACCORDING TO THE PLAT THEREOF, AS RECORDED IN PLAT BOOK 5, PAGE 79, OF THE PUBLIC RECORDS OF PALM BEACH COUNTY, FLORIDA, BEING MORE PARTICULARLY DESCRIBED AS FOLLOWS:

BEGINNING AT A POINT ON THE WEST BOUNDARY LINE OF SAID LOT 111, 367.9 FEET SOUTH OF THE NORTHWEST CORNER OF SAID LOT 111 FOR A POINT OF BEGINNING; THENCE RUNNING SOUTH ALONG THE WEST BOUNDARY LINE OF SAID LOT 111, A DISTANCE OF 10 FEET TO A POINT; THENCE RUNNING EAST ON A LINE PARALLEL TO THE NORTH AND SOUTH BOUNDARY LINES OF SAID LOT 111 A DISTANCE OF 155 FEET TO A POINT; THENCE RUNNING NORTH ON A LINE PARALLEL TO THE EAST AND WEST BOUNDARY LINES OF SAID LOT 111 A DISTANCE OF 10 FEET; THENCE RUNNING WEST ON A LINE PARALLEL TO THE NORTH AND SOUTH BOUNDARY LINES OF SAID LOT 111 A DISTANCE OF 155 FEET TO THE POINT OF BEGINNING.

ZONING: MF-30 + RPD (RESIDENTIAL / PLANNED DEVELOPMENT)
SITE: GROSS: 5.13 ACRES 223,513 SQ. FT.
NET : 4.714 ACRES 205,339 SQ. FT.

SITE STATISTICS:

COVERAGE		
BUILDINGS	38,079 SQ.FT.	18%
PARKING & DRIVES	57,134 SQ.FT.	28%
WALKS & PATIOS	11,929 SQ.FT.	6%
LANDSCAPE & LAKE	98,197 SQ.FT.	48%
TOTAL	**205,339 SQ.FT.**	**100%**

IMPERVIOUS AREA: 107,142 SQ.FT. 52%
PERVIOUS+LAKE AREA: 98,197 SQ.FT. 48%
(PERVIOUS AREA: 68,531 SQ.FT., + LAKE :29,666 SQ.FT.)

NUMBER OF RESIDENTIAL UNITS: 118 GROSS UNITS PER ACRE: 23.00
NET UNITS PER ACRE: 25.03

SP-1 1 SITE PLAN

SCALE: 1" =30'

REVISIONS:

1	DATA TABLE REV. 8-13-14
2	PARKING REV. 8-13-14
3	F.H. RELOC. 8-13-14
4	POOL RELOC. 8-13-14
5	BUS STOP RELOC. 8-13-14
6	PARKING LAYOUT REV. 10-01-14 SP
7	NOTE REVISION 10-01-14 SP
8	STREET PARKING 11-06-14 SP

LAWRENCE KRAMER, ARCHITECT
LICENSE RECIPROCITY NO. 4972

SOUTHEAST ARCHITECTS SERVICES, INC.
4310 WEST BROWARD Blvd. Plantation, Fl. 33317
(954) 797-2821 - FAX (954) 797-2847
LIC. # AA-C001953

"THE VILLAGE II" at LAKE OSBORNE
2340 LAKE WORTH ROAD
LAKE WORTH, FL 33461

DRAWN: ALEX F
DATE: 11-06-14
PROJECT NUMBER: 8-13
SHEET NUMBER: SP-1
1 OF: 4

CITY OF LAKE WORTH

7 North Dixie Highway · Lake Worth, Florida 33460 · Phone: 561-586-1600· Fax: 561-586-1750

AGENDA DATE: December 2, 2014, Regular Meeting **DEPARTMENT:** City Clerk

---

EXECUTIVE BRIEF

TITLE:
Authorize payment for election costs of August 26, 2014 election.

SUMMARY:

This item authorizes payment to the Supervisor of Elections for the August 26, 2014 election costs but not for the Supervisor's attorney's fees.

BACKGROUND AND JUSTIFICATION:
On August 26, 2014, the Supervisor of Elections for Palm Beach County conducted a primary election which included the City's bond referendum generally known as "Lake Worth 2020". The Palm Beach County Canvassing Board met on August 26, 2014 and thereafter to canvass the provisional ballots cast in the primary election. The official results as determined by the Supervisor based on the County Canvassing Board's review was that the City's bond referendum failed by 25 votes.

Of the 30 provisional ballots cast in the City of Lake Worth, 25 were rejected by the Canvassing Board. While some of the provisional ballots appeared to be properly rejected (e.g., the voter came back and voted by regular ballot or the voter voted at the wrong precinct), approximately 14 were rejected due to clerical errors by the poll workers. The most frequent error was the poll workers' failure to fill in the "Ballot Style" area on the provisional ballot envelope (directly underneath voter's certification). Some poll workers left the "Ballot Style" completely blank while others inserted "Prov". These clerical errors appeared to be the sole cause for rejection by the Canvassing Board.

The City raised this issue to the Supervisor and the Canvassing Board as contrary to Florida law and urged them to adopt procedures to resolve the issue. On October 7, 2014, the City approved Resolution 63-2014 which asked the Canvassing Board for a meeting to address the issue with the provisional ballots and the conduct of the Board's meetings from the August election. Prior to sending Resolution 63-2014 to the Board's attorney, the City discovered that on August 28, 2014, the Supervisor and the Canvassing Board requested an opinion from the Florida Department of State, Division of Elections, on the provisional ballot issue. The City Attorney then provided Resolution 63-2014 to the Canvassing Board's attorney, Ken Spillias, which he received on October 20, 2014. On October 21, 2014, Mr. Spillias discussed the matter with the Canvassing Board. On October 23, 2014, Mr. Spillias sent a letter to the City Attorney in regards to the Canvassing Board's review and response.

In Resolution 63-2014, the City requested that the Board (which includes the Supervisor of Elections) establish a procedure for eliminating clerical errors as a sole basis for rejecting a provisional ballot. The Board's response was that it decides each ballot based on the law and added, "As such, it does not have the authority to establish its own procedures for a broad category of potential ballot errors. This would constitute legislating, which it does not have the authority to do. As we have suggested throughout the various discussions we have been having with you concerning this, the remedy is with the Legislature, not the Canvassing Board".

While the Board's response is disappointing and contrary to the City Attorney's review of the law, the Board will likely be re-considering its position in view of the Department of State, Division of Election's opinion in response to the Supervisor of Elections and Board's request for the same. A copy of the opinion is attached. The opinion concludes:

> Each supervisor of elections should implement procedures to ensure the canvassing board will be able to determine the precinct and ballot style of each provisional ballot cast, even where the poll worker fails to record in his or her role as a witness the information on the certificate on the outside of the provisional ballot envelope. The canvassing board should consider all permissible evidence to make a decision about the eligibility of the voter. If the canvassing board is unable to determine where the provisional ballot was cast and which ballot style was used, the canvassing board should adhere to the statutory requirement that the provisional ballot is to be counted unless the canvassing board determines by a preponderance of the evidence that the voter was not entitled to vote.

The Division of Election's opinion is consistent with the City's position on the provisional ballots and request for procedures to properly canvass the provisional ballots. The City Attorney is hopeful that in light of this opinion, the Supervisor and the Canvassing Board will implement such procedures and otherwise abide by the law.

Under the City's existing Charter and Code, the City is not required to take any official action with regards to the results of the August 26, 2014 election. However, the City has received an invoice from the Supervisor of Elections for the August 26, 2014 election. The Supervisor's invoice is for $5,379.49, which consists of $1,957.49 in election costs and $3,440 in legal fees. A copy of the Supervisor's invoice and breakdown of legal fees is attached. The legal fees are related to the issues raised by the City with regards to the provisional ballots. For example, the legal fees consist of the Supervisor's attorney attending a canvassing board meeting(s); reviewing our firm's public records requests, the request for an opinion to the Division of Elections, the City's September 8, 2014 Commission meeting, correspondence from our firm for the City, and the Palm Beach post public records requests and editorials on provisional ballots. Payment of the Supervisor's legal fees is not recommended especially in light of the Division of Election's opinion substantiating the City's position on the provisional ballots.

MOTION:

I move to authorize / not authorize payment of $1,957.49 to the Supervisor of Elections for the cost of the election.

ATTACHMENT(S):

Fiscal Impact Analysis
Division of Election's Opinion
Supervisor Invoice
Legal Fee Breakdown

FISCAL IMPACT ANALYSIS

A. Five Year Summary of Fiscal Impact:

Fiscal Years	2015	2016	2017	2018	2019
Capital Expenditures	0	0	0	0	0
Operating Expenditures	$1,958	0	0	0	0
External Revenues	0	0	0	0	0
Program Income	0	0	0	0	0
In-kind Match	0	0	0	0	0
Net Fiscal Impact	$1,958	0	0	0	0
No. of Addn'l Full-Time Employee Positions	0	0	0	0	0

B. Recommended Sources of Funds/Summary of Fiscal Impact:

City Clerk	Municipal Referendum Bond Election				
Account Number (s)	**Account Description (s)**	**FY 2015 Budget**	**Current Balance**	**Agenda Expenses**	**Remaining Balance**
001-1030-511-49-50	Other Current Charges/Elections	19,000	$15,247.59	(1,958)	$13,289.59

C. Department Fiscal Review: pjl

1 of 2

1100 $54946
53125

515 North Flagler Drive, Suite 1500
West Palm Beach, FL 33401
561-640-0820
Fax: 561-640-8202
Federal Tax I.D. #65-0500793

PALM BEACH COUNTY SUPERVISOR OF ELECTIONS
240 SOUTH MILITARY TRAIL
WEST PALM BEACH, FL 33415

Invoice 102133
September 10, 2014

ID: 4124-000 - KGS

Re: GENERAL REPRESENTATION

For Services Rendered Through August 31, 2014

Current Charges

Current Fees	$6,500.00	
Total Current Charges		**$6,500.00**

Total Due **$6,500.00**

Current Invoice Fee Recap

	Hours	Rate/Hour	Amount
KENNETH G. SPILLIAS	32.50	200.00	$6,500.00

LW - $840

SUPERVISOR OF ELECTIONS
2014 SEP 15 PM 2:13
PALM BEACH COUNTY, FL

LEWIS
LONGMAN &
WALKER | P.A.
ATTORNEYS AT LAW
years

515 North Flagler Drive, Suite 1500
West Palm Beach, FL 33401
561-640-0820
Fax: 561-640-8202
Federal Tax I.D. #65-0500793

PALM BEACH COUNTY SUPERVISOR OF ELECTIONS
Re: GENERAL REPRESENTATION
I.D. 4124-000 - KGS

September 10, 2014
Invoice 102133

Fees

Date	Atty	Description	Hours
08/07/14	KGS	ATTENTION TO CANVASSING BOARD MEMBERSHIP AND SCHEDULE.	0.20
08/14/14	KGS	EMAIL CORRESPONDENCE WITH S. BUCHER RE: CANVASSING BOARD MEETING.	0.20
08/18/14	KGS	ATTENTION TO CANVASSING BOARD SCHEDULE; TELEPHONE CONFERENCE WITH L. HANSER RE: CANVASSING BOARD.	0.50
08/19/14	KGS	ATTENTION TO SCHEDULING CANVASSING BOARD.	0.20
08/20/14	KGS	ATTEND CANVASSING BOARD.	5.40
08/22/14	KGS	ATTEND CANVASSING BOARD.	3.50
08/25/14	KGS	ATTEND CANVASSING BOARD.	1.80
08/26/14	KGS	ATTEND CANVASSING BOARD.	11.00
08/27/14	KGS	ATTEND CANVASSING BOARD.	5.50
08/28/14	KGS	RECEIVE AND REVIEW G. TORCIVIA PUBLIC RECORDS REQUEST AND S. BUCHER REQUEST OF DIVISION OF ELECTIONS FOR ADVISORY OPINION; EMAIL CORRESPONDENCE WITH L. HANSER RE: SAME; RECEIVE AND REVIEW COPY OF SECOND PUBLIC RECORDS REQUEST FROM G. TORCIVIA.	0.40
08/29/14	KGS	L. HANSER, S. BUCHER EMAIL CORRESPONDENCE RE: RESPONSE TO REQUEST FOR OPINION; ATTEND CANVASSING BOARD.	3.80
		Total Hours	**32.50**

W
NL

Lake Worth
4.2

4.2 x 200/hr = $840

LEWIS
LONGMAN &
WALKER | P.A.
ATTORNEYS AT LAW
20 years

515 North Flagler Drive, Suite 1500
West Palm Beach, FL 33401
561-640-0820
Fax: 561-640-8202
Federal Tax I.D. #65-0500793

PALM BEACH COUNTY SUPERVISOR OF ELECTIONS
240 SOUTH MILITARY TRAIL
WEST PALM BEACH, FL 33415

Invoice 102579
October 8, 2014

ID: 4124-000 - KGS

Re: GENERAL REPRESENTATION

For Services Rendered Through September 30, 2014

Current Charges

Current Fees	$2,660.00	
Current Disbursements	$1.50	
Total Current Charges		**$2,661.50**

Total Due $2,661.50

Current Invoice Fee Recap

	Hours	Rate/Hour	Amount
KENNETH G. SPILLIAS	0.40	0.00	$0.00
KENNETH G. SPILLIAS	13.30	200.00	$2,660.00

LW → 13 hrs X 200 = 2,600
PBG .3 = 60

RECEIVED OCT 24 2014

LEWIS
LONGMAN &
WALKER | P.A.
ATTORNEYS AT LAW
20 years

515 North Flagler Drive, Suite 1500
West Palm Beach, FL 33401
561-640-0820
Fax: 561-640-8202
Federal Tax I.D. #65-0500793

RECEIVED OCT 24 2014

Fees

Date	Atty	Description	Hours
09/03/14	KGS	RECEIVE AND REVIEW C. GODDEAU EMAIL CORRESPONDENCE RE: SECOND PUBLIC RECORDS REQUEST; ATTENTION TO RESCHEDULING CANVASSING BOARD; C. GODDEAU, S. BUCHER EMAIL CORRESPONDENCE RE: PUBLIC RECORDS.	0.40
09/04/14	KGS	S. BUCHER, C. GODDEAU EMAIL CORRESPONDENCE RE: PUBLIC RECORDS REQUEST; REVIEW EMAIL CORRESPONDENCE WITH DIVISION OF ELECTIONS RE: OPINION ON PROVISIONAL BALLOTS.	0.30
09/05/14	KGS	ATTEND POST-ELECTION MANUAL AUDIT; RECEIVE AND REVIEW PUBLIC RECORDS REQUEST, LETTER FROM G. TORCIVIA; FOLLOW UP WITH S. BUCHER.	1.70
09/08/14	KGS	REVIEW LAKE WORTH CITY COMMISSION MEETING RE: PROVISIONAL BALLOTS; TELEPHONE CONFERENCES WITH S. BUCHER RE: MEETING, RESPONSE AND RESPONSE TO PUBLIC RECORDS REQUEST.	2.50
09/09/14	KGS	EMAIL CORRESPONDENCE WITH S. BUCHER RE: PUBLIC RECORDS REQUEST, RESPONSE TO LAKE WORTH MEETING COMMENTS; REVIEW PROPOSED DRAFT OF RESPONSE AND DRAFT NEW PROPOSED LETTER TO G. TORCIVIA; TELEPHONE CONFERENCE WITH S. BUCHER RE: SAME; EMAIL CORRESPONDENCE WITH L. HANSER AND L. JOHNSON RE: SERVICE; ATTENTION TO FINALIZING AND FORWARDING LETTER.	3.50
09/10/14	KGS	REVIEW S. BUCHER EMAIL CORRESPONDENCE WITH C. GODDEAU AND PALM BEACH POST RE: PUBLIC RECORDS REQUESTS; REVIEW C. GODDEAU RESPONSE AND CITED STATUTORY PROVISIONS; VARIOUS EMAIL CORRESPONDENCE RE: LAKE WORTH MEETING.	0.60
09/11/14	KGS	RECEIVE AND REVIEW CANVASSING BOARD SCHEDULING; L. HANSER EMAIL CORRESPONDENCE WITH S. BUCHER RE: SAME.	0.20
09/12/14	KGS	S. BUCHER EMAIL CORRESPONDENCE RE: POST STORY ON LAKE WORTH BALLOTS; RECEIVE AND REVIEW LETTER FROM G. TORCIVIA; FOLLOW UP WITH CANVASSING BOARD MEMBERS.	0.40
09/15/14	KGS	RECEIVE AND REVIEW S. BUCHER EMAIL CORRESPONDENCE	0.10

LEWIS
LONGMAN &
WALKER | P.A.
ATTORNEYS AT LAW
20 years

515 North Flagler Drive, Suite 1500
West Palm Beach, FL 33401
561-640-0820
Fax: 561-640-8202
Federal Tax I.D. #65-0500793

RECEIVED OCT 24 2014

PALM BEACH COUNTY SUPERVISOR OF ELECTIONS
Re: GENERAL REPRESENTATION
I.D. 4124-000 - KGS

October 8, 2014
Invoice 102579

	Date	Atty	Description	Hours
			WITH PALM BEACH POST RE: PUBLIC RECORDS REQUEST.	
PBG	09/16/14	KGS	RECEIVE AND REVIEW LETTER FROM L. FAGAN RE: PALM BEACH GARDENS BALLOT; FOLLOW UP.	0.20
PBG & LW	09/17/14	KGS	TELEPHONE CONFERENCES WITH S. BUCHER AND L. HANSER RE: PRESS INQUIRIES; TELEPHONE CONFERENCE WITH S. BUCHER RE: LETTER FROM L. FAGAN RE: PALM BEACH GARDENS; S. BUCHER EMAIL CORRESPONDENCE WITH PALM BEACH POST RE: PUBLIC RECORDS REQUEST; L. JOHNSON EMAIL CORRESPONDENCE WITH S. BUCHER RE; POST.	0.60 .1 PBG .5 LW
PBG & LW	09/18/14	KGS	EMAIL CORRESPONDENCE WITH L. FAGAN RE: PALM BEACH GARDENS BALLOT ISSUE; L. HANSER EMAIL CORRESPONDENCE RE: POST EDITORIAL; POST EMAIL CORRESPONDENCE WITH S. BUCHER RE: PUBLIC RECORDS REQUEST; TELEPHONE CONFERENCE WITH L. HANSER; EMAIL CORRESPONDENCE WITH S. BUCHER RE: PUBLIC RECORDS REQUEST.	1.00 .1 PBG .9 LW
	09/19/14	KGS	TELEPHONE CONFERENCE WITH G. TORCIVIA RE: MEETING; REVIEW POST CORRESPONDENCE RE: PROVISIONAL BALLOTS; TELEPHONE CALL TO S. BUCHER (LEFT MESSAGE), TELEPHONE CONFERENCE WITH S. BUCHER.	0.60
	09/20/14	KGS	ATTENTION TO POST EDITORIAL. (NO CHARGE)	0.10
	09/22/14	KGS	RECEIVE AND REVIEW C. PERSAUD AND C. GODDEAU EMAIL CORRESPONDENCE RE: PUBLIC RECORDS REQUESTS; TELEPHONE CALL TO S. BUCHER; TELEPHONE CONFERENCE WITH S. BUCHER; FOLLOW UP.	0.70
	09/24/14	KGS	TELEPHONE CONFERENCE WITH L. HANSER RE: LAKE WORTH ISSUE, CANVASSING GENERAL ELECTION.	0.30
	09/25/14	KGS	TELEPHONE CONFERENCE WITH G. TORCIVIA RE: SCHEDULING MEETING; C. GODDEAU EMAIL CORRESPONDENCE WITH S. BUCHER RE: PUBLIC RECORDS REQUEST.	0.20
	09/26/14	KGS	TELEPHONE CALL TO G. TORCIVIA (LEFT MESSAGE) RE: MEETING. (NO CHARGE)	0.10
	09/29/14	KGS	TELEPHONE CALLS FROM AND TO G. TORCIVIA RE: MEETING. (NO CHARGE)	0.20
			Total Hours	**13.70**

LEWIS
LONGMAN &
WALKER | P.A.
ATTORNEYS AT LAW

515 North Flagler Drive, Suite 1500
West Palm Beach, FL 33401
561-640-0820
Fax: 561-640-8202
Federal Tax I.D. #65-0500793

Disbursements

Date	Description	Amount
	COPY CHARGES	$1.50
	Total Disbursements	**$1.50**

RECEIVED OCT 24 2014

SUMMARY

Each supervisor of elections should implement procedures to ensure that the canvassing board will be able to determine the precinct and ballot style of each provisional ballot cast, even where the poll worker fails to record in his or her role as a witness the information on the certificate on the outside of the provisional ballot envelope. The canvassing board should consider all permissible evidence to make a decision about the eligibility of the voter. If the canvasing board is unable to determine where the provisional ballot was cast and which ballot style was used, the canvassing board should adhere to the statutory requirement that the provisional ballot is to be counted unless the canvassing board determines by a preponderance of the evidence that the voter was not entitled to vote.

Respectfully,

Maria I. Matthews, Esq.
Director, Division of Elections

1, Fla. Const. (providing for secret voting); § 101.041, Fla. Stat. (same); see also § 104.23, Fla. Stat. (making it a third-degree felony for any election official or person assisting any elector to willfully disclose how any voter voted). To ensure this secrecy, all canvassing decisions regarding provisional ballots, as in the context of the canvassing of absentee ballots, must be made prior to removal of a ballot from its envelope. Cf. § 101.68, Fla. Stat. (setting forth the procedures for canvassing absentee ballots, and including the requirement that, upon opening the mailing envelopes, the ballots must be separated and the envelopes mixed, "so as to make it impossible to determine which secrecy envelope came out of which mailing envelope").

FLORIDA DEPARTMENT of STATE

RICK SCOTT
Governor

KEN DETZNER
Secretary of State

November 6, 2014

The Honorable Susan Bucher
Palm Beach County Supervisor of Elections
240 South Military Trail
West Palm Beach, Florida 33415

RE: DE 14-04 Provisional ballots – Poll Worker Failure or Improper Completion of Provisional Ballot Certificate, § 101.048, Florida Statutes

Dear Supervisor Bucher:

As the Palm Beach County Supervisor of Elections, you have asked for guidance regarding the casting and canvassing of provisional ballots. Because this answer will assist you in your duties, the Division of Elections has the authority to issue you an opinion pursuant to section 106.23(2), Florida Statutes (2014). In your request for a formal opinion, you essentially ask the following question:

> How should the canvassing board proceed when a provisional ballot is cast in a election but the poll worker fails to record the precinct number and/or ballot style, and the canvassing board, as a result, is unable to determine where the voter cast the ballot and/or the ballot style enclosed within the provisional ballot envelope?

Section 101.048, Florida Statutes, which details the procedures for casting and canvassing provisional ballots, requires a provisional ballot to be placed within a secrecy envelope, which is then inserted into a provisional ballot envelope. The outside of the provisional ballot envelope contains the voter's certificate and affirmation, on which the voter writes certain information, including the voter's name, date of birth, address, party affiliation, and signature. Official-use-only space is also provided for the election official (i.e., the poll worker assisting the voter) to write in the date, the precinct number, ballot style, and to sign as a witness to the voter's completion

of the ballot certificate and affirmation.[1] The canvassing board ultimately examines this certificate and affirmation to ensure that the voter cast the ballot in the proper precinct and to ensure that the voter cast the proper ballot style. Unless the canvassing board determines that the voter was not entitled to vote, the ballot inside the secrecy envelope must be counted if the signature on the provisional ballot envelope matches the signature on the voter's registration. See § 101.048(2)(a) and (b), Fla. Stat.

In your request for an advisory opinion, you indicate that poll workers may have failed to properly record on the certificate the precinct where the voter cast the provisional ballot and/or the ballot style of the ballot cast. In such situations, the canvassing board will likely be limited in its ability to determine whether the voter was eligible to vote, because part of the analysis is whether the voter cast the vote in the proper precinct.[2] If the canvassing board has no other information upon which to rely or otherwise ascertain where the provisional ballot was cast, the board will be unlikely to fulfill its duty to ensure that the provisional voter was eligible to vote. For this reason, it is the opinion of the Division of Elections that, aside from providing enhanced focus on this issue in poll worker training, each supervisor of elections should be implementing or have implemented procedures to ensure that provisional ballot envelopes are properly tracked in a manner which will allow the canvassing board to know the precinct where a provisional ballot was cast even in cases where the poll workers have failed to write the precinct number on the certificate.

If the canvassing board is unable to ascertain—in the absence of a precinct number, ballot style, and/or election official's witness signature—from the certificate if the voter voted in the proper precinct, the canvassing board should still examine the voter's certificate and any other permissible evidence. See § 101.048(2)(a) (providing that the canvassing board "shall review the information provided in the Voter's Certificate and Affirmation, written evidence provided by the person pursuant to subsection (1), any other evidence presented by the supervisor of elections, and, in the case of a challenge, any evidence presented by the challenger"). The canvassing board must make a determination on the eligibility of the provisional voter in accordance with section 101.048(2)(a), which provides that the provisional ballot "shall be counted unless the canvassing board determines by a preponderance of the evidence that the voter was not entitled to vote. If the canvassing board lacks important information such as the precinct where the ballot was cast or the ballot style, this does not alter the board's duty to count the ballot unless the canvassing board determines by a preponderance of the evidence that the person was not entitled to cast the ballot.[3]

---

[1] Rule 1S-2.037, Florida Administrative Code, further sets forth the format and content of the provisional ballot certificate and affirmation, and the notice of rights to be given to the provisional ballot voter.

[2] Another way for the canvassing board to possibly determine where the ballot was cast is to examine the signature of the poll worker and then determine to which precinct the poll worker was assigned.

[3] The canvassing board may not open a provisional ballot envelope to check the ballot style inside, because of the strict prohibition against revealing the secrecy of the ballot. See Art. VI, §

SUMMARY

Each supervisor of elections should implement procedures to ensure that the canvassing board will be able to determine the precinct and ballot style of each provisional ballot cast, even where the poll worker fails to record in his or her role as a witness the information on the certificate on the outside of the provisional ballot envelope. The canvassing board should consider all permissible evidence to make a decision about the eligibility of the voter. If the canvasing board is unable to determine where the provisional ballot was cast and which ballot style was used, the canvassing board should adhere to the statutory requirement that the provisional ballot is to be counted unless the canvassing board determines by a preponderance of the evidence that the voter was not entitled to vote.

Respectfully,

Maria I. Matthews, Esq.
Director, Division of Elections

1, Fla. Const. (providing for secret voting); § 101.041, Fla. Stat. (same); see also § 104.23, Fla. Stat. (making it a third-degree felony for any election official or person assisting any elector to willfully disclose how any voter voted). To ensure this secrecy, all canvassing decisions regarding provisional ballots, as in the context of the canvassing of absentee ballots, must be made prior to removal of a ballot from its envelope. Cf. § 101.68, Fla. Stat. (setting forth the procedures for canvassing absentee ballots, and including the requirement that, upon opening the mailing envelopes, the ballots must be separated and the envelopes mixed, "so as to make it impossible to determine which secrecy envelope came out of which mailing envelope").

Palm Beach County

240 SOUTH MILITARY TRAIL
WEST PALM BEACH, FL 33415
POST OFFICE BOX 22309
WEST PALM BEACH, FL 33416

SUSAN BUCHER
Supervisor of Elections

TELEPHONE: (561) 656-6200
FAX NUMBER: (561) 656-6287
WEBSITE: www.pbcelections.org

October 22, 2014

Invoice Number: 08262014LW

Cost Summary of Services for Municipal Elections
Date of Election: August 26, 2014

Municipality: City of Lake Worth
Address: Pamela Lopez, City Clerk
City of Lake Worth
7 North Dixie Highway
Lake Worth, Florida 33460

	COSTS
MUNICIPAL PACKAGE	**1,223.05**
ABSENTEE BALLOTS	**224.81**
PRECINCT SERVICES	**509.63**
MISC:	**3,440.00**
Legal Fees	3,440.00
Total Invoice Balance	**5,397.49**

Please remit payable to:
PALM BEACH COUNTY SUPERVISOR OF ELECTIONS

Mail to:
Palm Beach County Supervisor of Elections
Attn: Business Affairs
240 S Military Trail
West Palm Beach, FL 33415

Please include invoice number on check
Payment Terms: 30 days of invoice date

CITY OF LAKE WORTH

7 North Dixie Highway · Lake Worth, Florida 33460 · Phone: 561-586-1600· Fax: 561-586-1750

AGENDA DATE: December 2, 2014, Regular Meeting **DEPARTMENT:** Electric Utility

---

EXECUTIVE BRIEF

TITLE:
Purchase various distribution transformers for inventory usage throughout Fiscal Year 2015

SUMMARY:
This Item will authorize the purchase of various size and type of transformers from Wesco Distribution, Gresco Utility Supply, and HD Supply.

BACKGROUND and JUSTIFICATION:
Invitation to Bid (IFB-14-131) requested pricing for an estimated quantity of 108 overhead transformers and Invitation to Bid (IFB-14-129) requested pricing for an estimated quantity of 35, 3-phase padmount transformers.

Bids were opened on September 11, 2014 for "indefinite delivery/ indefinite quantity" purchases proposed. These bids were evaluated by staff, taking into account both initial cost and lifecycle costs for the proposed products. Electric Utilities is requesting authorization to issue blanket purchase orders that will allow purchase of the necessary transformers from each of the selected vendors at a not to exceed cost as specified for each of the contracts.

Type	City Stock#	Size (kVA)	QT	Cost	Total
IFB-14-131 (Overhead Distribution Transformers)	285-86-78187 HD Supply	50	108	$1,354	$146,232
				Total	**$146,232**
IFB-14-129 (Three Phase Pad Mount Transformers)	Gresco	150 kVA 13/26kV	13	$8,505	$110,565
	Gresco	300 kVA 13/26kV	5	$11,292	$56,460
	Gresco	500 kVA 13/26kV	2	$13,593	$27,186
				Total	**$194,211**
	Wesco	750 kVA 13/26kV	1	$19,019	$19,019
	Wesco	1000 kVA 13/26kV	2	$21,009	$42,018
	Wesco	150 kVA 13/4kV	7	$10,144	$71,008
	Wesco	300 kVA 13/4kV	3	$11,665	$34,995
	Wesco	500 kVA 13/4kV	2	$13,926	$27,852
				Total	**$194,892**

The pricing of each transformer is on a per unit basis with no guaranteed minimum quantity. The quantities reflected within are for estimating purposes only based on expected requirements/usage. The transformers in this purchase are for routine replenishment. All purchases are being recommended at the lowest bid price per unit.

This item was reviewed and recommended by the Electric Utility Advisory Board on November 5, 2014.

MOTION:

(1) I move to approve/not approve the purchase of various padmount transformers from Wesco Distribution in an amount not to exceed $194,892.

(2) I move to approve/not approve the purchase of various padmount transformers from Gresco Utility Supply in the amount not to exceed $194,211.

(3) I move to approve/not approve the purchase of 50kVA overhead transformers from HD Supply in an amount not to exceed $146,232.

ATTACHMENT(S):

1) Fiscal Impact Analysis
2) Wesco Distribution Agreement
3) Gresco Utility Supply Agreement
4) HD Supply Agreement

FISCAL IMPACT ANALYSIS

A. Five Year Summary of Fiscal Impact:

Fiscal Years	2015	2016	2017	2018	2019
Capital Expenditures	0	0	0	0	0
Operating Expenditures	535,335	0	0	0	0
External Revenues	0	0	0	0	0
Program Income	0	0	0	0	0
In-kind Match	0	0	0	0	0
Net Fiscal Impact	535,335	0	0	0	0
No. of Addn'l Full-Time Employee Positions	0	0	0	0	0

B. Recommended Sources of Funds/Summary of Fiscal Impact:

Utilities /Electric T&D						
Account Number	Account Description	Project #	FY2015 Budget	Current Balance	Agenda Item Expenditures	Remaining Balance
401-0000-141.02-10	Warehouse Electric/Parts	N/A	TBD	3,056,623	$535,335	TBD

C. Department Fiscal Review: Clay Lindstrom __

AGREEMENT
(Purchase of Three Phase Pad Mount Transformers)

THIS AGREEMENT is made this _____day of _____, 2014 between the **City of Lake Worth**, Florida, a municipal corporation, hereinafter the "CITY", with its office located at 7 North Dixie Highway, Lake Worth, Florida 33460, and, **Wesco Distribution Inc.,** a corporation authorized to do business in the State of Florida, hereinafter the "CONTRACTOR", with its office located at 225 W. Station Square Dr., Suite 700, Pittsburgh, PA 15219.

RECITALS

WHEREAS, the CITY is a municipal corporation organized and existing pursuant to the Charter and the Constitution of the State of Florida;

WHEREAS, the CITY issued Invitation for Bid #14-129 (hereinafter "IFB") for the procurement of three phase pad mount transformers;

WHEREAS, CONTRACTOR submitted a bid to provide three phase pad mount transformers as described and set out in the IFB;

WHEREAS, the CITY desires to accept a portion of CONTRACTOR's bid in order for CONTRACTOR to render the goods to the CITY as provided herein;

WHEREAS, the CONTRACTOR further warrants that it is experienced and capable of performing the tasks hereunder in a professional and competent manner;

WHEREAS, the CITY finds awarding the IFB to the CONTRACTOR as described herein serves a valid public purpose.

NOW THEREFORE, the CITY hereby engages the services of the CONTRACTOR, and in consideration of the mutual promises herein contained, the sufficiency of which is hereby acknowledged by both parties, the parties agree as follows:

1. TERM

1.1 The Contractor agrees to hold the prices listed in the IFB for a period of one year from the execution of this Agreement by the CITY

2. SCOPE OF WORK

2.1 The scope of work is the providing of the requested three phase pad mount transformers, as more specifically set forth in the IFB (the "Scope of Work").

CONTRACTOR shall provide the three phase pad mount transformers as requested by the CITY upon the issuance of a P.O., as set forth in the IFB.

2.2 The CONTRACTOR represents to the CITY that the materials provided under this Agreement shall be in accordance with accepted and established trade practices and procedures recognized in the CONTRACTOR's trade in general and that the materials shall conform to the highest standards and in accordance with this Agreement.

2.3 The CONTRACTOR represents that it is licensed to do business in the State of Florida and holds and will maintain all applicable licenses required for the work to be completed under this Agreement. The CONTRACTOR further warrants its capability and experience to perform the work provided for herein in a professional and competent manner.

2.4 All deliveries of the three phase pad mount transformers shall be in accordance with the terms set forth in the IFB.

3. USE OF AGENTS OR ASSISTANTS

3.1 To the extent reasonably necessary to enable the CONTRACTOR to perform its work hereunder, the CONTRACTOR shall be authorized to engage the services of any agents or assistants which it may deem proper, and may further employ, engage, or retain the services of such other persons or corporations to aid or assist in the proper performance of its duties. All costs of the services of, or expenses incurred by, such agents or assistants shall be paid by the CONTRACTOR.

4. MATERIALS

4.1 The CONTRACTOR shall provide all materials as more specifically set forth In Exhibit "A", attached hereto and incorporated herein, as it relates to the line items. The quantities are estimates, therefore, the CITY may order more or less than the estimated amount.

5. FEE AND ORDERING MECHANISM

5.1 For services to be rendered under this Agreement, the CONTRACTOR shall be entitled to a fee as set forth in the IFB in regards to the individual line item amount for each three phase pad mount transformer.

5.2 Should the CITY require additional materials, not included in this Agreement, fees and payment for such work will be set forth in a separate Addendum, as authorized in accordance with the CITY's procurement code prior to any such additional goods being provided by the CONTRACTOR.

5.3 The City's ordering mechanism for all work performed under this Agreement shall be a City Purchase Order; however, the terms and conditions stated in a City Purchase Order shall not apply. CONTRACTOR shall not provide goods under this Agreement without a City Purchase Order specifically for this purpose. CONTRACTOR shall not exceed amounts expressed on the Purchase Order. Note that the City's Fiscal Year ends on September 30th of each calendar year. The City cannot authorize the purchase of goods beyond September 30th of each calendar year, prior to the annual budget being approved by the City Commission. Additionally, the City must have budgeted appropriate funds for the goods in any subsequent Fiscal Year. If the budget is approved for said goods, the City will issue a new Purchase Order each Fiscal Year, for required and approved goods.

6. MAXIMUM COSTS

6.1 The CONTRACTOR expressly acknowledges and agrees that the total cost to provide all goods is specified in the IFB and no additional costs shall be authorized without prior written approval from CITY's governing body.

7. INVOICE

7.1 The CONTRACTOR shall submit an itemized invoice to the CITY for approval prior to receiving compensation. The CONTRACTOR shall be paid within thirty (30) days of receipt of an approved invoice for work.

8. AUDIT BY CITY

8.1 The CONTRACTOR shall permit the CITY, or any authorized representatives of the CITY, at all reasonable times, access to and the right to examine all records, books, papers or documents related to the CONTRACTOR's performance under this Agreement including, but not limited to, expenses for sub-contractors, agents or assistants, direct and indirect charges for work performed and detailed documentation for all such work performed or to be performed under this Agreement.

9. COPIES OF DATA/DOCUMENTS

9.1 Copies or original documents prepared by the CONTRACTOR in relation to work associated with this Agreement shall be provided to the CITY. Data collected, stored, and/or provided shall be in a form acceptable to the CITY and agreed upon by the CITY.

10. OWNERSHIP

10.1 Each and every report, draft, work product, map, record, and other document reproduced, prepared, or caused to be prepared by the CONTRACTOR pursuant to or in connection with this Agreement shall be the exclusive property of the CITY.

11. WRITTEN AUTHORIZATION REQUIRED

11.1 The CONTRACTOR shall not make changes in the Scope of Work or perform any additional work or provide any additional material under this Agreement without first obtaining written authorization from the CITY for such additional work or materials. Additional labor or materials provided without written authorization shall be done at the CONTRACTOR's sole risk and without payment from the CITY.

12. DEFAULTS, TERMINATION OF AGREEMENT

12.1 If the CONTRACTOR fails to supply the requested three phase pad mount transformers or has failed in any other respect to satisfactorily perform the work specified in this Agreement; or, is in material breach of a term or condition of this Agreement, the Electric Utilities Director may give written notice to the CONTRACTOR specifying defaults to be remedied. Such notice shall set forth the basis for any dissatisfaction and suggest corrective measures. If the CONTRACTOR does not remedy defaults within the allotted time or commence good faith steps to remedy the default to the reasonable satisfaction of the Electric Utilities Director, the CITY may take such action to remedy the default and all expenses related thereto shall be borne by the CONTRACTOR including, without limitation, utilization of another contractor to provide for such work; and/or, the CITY may withhold any money due or which may become due to the CONTRACTOR for such expense and/or work related to the claimed default. Alternatively, or in addition to the foregoing, if after three (3) days the CONTRACTOR has not remedied defaults or commenced good faith steps to remedy defaults to the satisfaction of the Electric Utility Director, the CITY may elect to terminate this Agreement. No compensation shall be paid for de-mobilization, take-down, disengagement wind-down, lost profits or other costs incurred due to termination of this Agreement under this paragraph 12.1.

12.2 Notwithstanding paragraph 12.1, the CITY reserves the right and may elect to terminate this Agreement at any time, with or without cause. At such time, the CONTRACTOR would be compensated only for that work which has been satisfactorily completed to the date of termination. No compensation shall be paid for de-mobilization, take-down, disengagement wind-down, lost profits or other costs incurred due to termination of this Agreement under this paragraph 12.2.

13. INSURANCE

13.1. Prior to commencing any services the CONTRACTOR shall provide certificates evidencing insurance coverage as required hereunder. All insurance policies shall be issued by companies authorized to do business under the laws of the State of Florida. The Certificates shall clearly indicate that the CONTRACTOR has obtained insurance of the type, amount, and classification as required for strict compliance with this Section

and that no material change or cancellation of the insurance shall be effective without thirty (30) days' prior written notice to the CITY. Failure to comply with the foregoing requirements shall not relieve the CONTRACTOR of its liability and obligations under this Contract.

13.2. The CONTRACTOR shall maintain, during the life of this Contract, commercial general liability, including contractual liability insurance in the amount of $1,000,000 per occurrence to protect the CONTRACTOR from claims for damages for bodily and personal injury, including wrongful death, as well as from claims of property damages which may arise from any operations under this Contract, whether such operations be by the CONTRACTOR or by anyone directly employed by or contracting with the CONTRACTOR.

13.3. The CONTRACTOR shall maintain, during the life of this Contract, comprehensive automobile liability insurance in the minimum amount of $500,000 combined single limit for bodily injury and property damages liability to protect the CONTRACTOR from claims for damages for bodily and personal injury, including death, as well as from claims for property damage, which may arise from the ownership, use, or maintenance of owned and non-owned automobiles, including rented automobiles whether such operations be by the CONTRACTOR or by anyone directly or indirectly employed by the CONTRACTOR.

13.4. The CONTRACTOR shall maintain, during the life of this Contract, Workers' Compensation Insurance and Employer's Liability Insurance for all employees as required by Florida Statutes.

14. WAIVER OF BREACH

14.1 The waiver by either party of any breach of any provision of this Agreement shall not operate or be construed as a waiver of any subsequent breach of that same or any other provision.

15. INDEMNITY

15.1 The CONTRACTOR shall indemnify, defend and hold harmless, to the maximum extent permitted by law, the CITY and its officers, agents, employees and representatives, from and against any and all liability, suit, actions, proceedings, judgments, claims, losses, liens, damages, injuries (whether in contract or in tort, including personal injury, accidental death, patent infringement or property damage, and regardless, of whether the allegations are false, fraudulent or groundless), costs and expenses (including attorney's fees, litigation, arbitration, mediation, appeal expenses) to the extent arising out of or alleged to have arisen out of the acts or neglect of its agents, employees, subcontractors or by anyone the CONTRACTOR directly or indirectly employed.

15.2 The CONTRACTOR's obligation to indemnify, defend and hold harmless shall remain in effect and shall be binding upon the CONTRACTOR whether such injury or damage shall accrue, or may be discovered, before or after termination of this Agreement.

15.3 The CONTRACTOR's failure to comply with this section's provisions shall constitute a material breach upon which the CITY may immediately terminate or suspend this Agreement.

16. ENTIRE AGREEMENT AND ORDER OF PRECEDENCE

16.1 This Agreement consists of the terms and conditions provided herein; the IFB (including all specifications, exhibits and addenda attached thereto or referenced therein); and, the CONTRACTOR's responsive bid **(excluding the four pages of terms and conditions listed by the CONTRACTOR in its response to the bid)**. To the extent that there exists a conflict between this Agreement and the remaining documents, the terms, conditions, covenants, and/or provisions of this Agreement shall prevail with the IFB (including all specifications, exhibits and addenda attached thereto) next taking precedence. Wherever possible, the provisions of such documents shall be construed in such a manner as to avoid conflicts between provisions of the various documents.

16.2 This Agreement supersedes any and all other Agreements, either oral or in writing, between the parties hereto with respect to the subject matter hereof, and no other Agreement, statement, or promise relating to the subject matter of this Agreement which is not contained herein shall be valid or binding.

17. ASSIGNMENT

17.1 Nothing under this Agreement shall be construed to give any rights or benefits to any party other than the CITY and the CONTRACTOR. All duties and responsibilities under this Agreement shall be for the sole and exclusive benefit of the CITY and the CONTRACTOR and not for the benefit or any other party. The CONTRACTOR shall not assign any right or interest in this Agreement, and shall not delegate any duty owned, without the CITY's prior written consent. Any attempted assignment or delegation shall be void and totally ineffective for all purposes, and shall constitute a material breach upon which the CITY may immediately terminate or suspend this Agreement.

17.2 In the event the CITY consents to an assignment or delegation, the assignee, delegate, or its legal representative shall agree in writing to personally assume, perform, and be bound by this Agreement's covenants, conditions, obligations and provisions.

18. SUCCESSORS AND ASSIGNS

18.1 Subject to the provision regarding assignment, this Agreement shall be binding on the heirs, executors, administrators, successors, and assigns of the respective parties.

19. WAIVER OF TRIAL BY JURY

19.1 TO ENCOURAGE PROMPT AND EQUITABLE RESOLUTION OF ANY LITIGATION, EACH PARTY HEREBY WAIVES ITS RIGHTS TO A TRIAL BY JURY IN ANY LITIGATION RELATED TO THIS AGREEMENT.

20. GOVERNING LAW AND REMEDIES

20.1 The validity of this Agreement and of any of its terms or provisions, as well as the rights and duties of the parties hereunder, shall be governed by the laws of the State of Florida and venue shall be in Palm Beach County, Florida.

20.2 No remedy herein conferred upon any party is intended to be exclusive of any other remedy, and each and every such remedy shall be cumulative and shall be in addition to every other remedy given hereunder or now or hereafter existing at law or in equity or by statute or otherwise. No single or partial exercise by any party of any right, power, or remedy hereunder shall preclude any other or further exercise thereof.

21. TIME IS OF THE ESSENCE

21.1 Time is of the essence in the delivery of the goods as specified herein.

22. NOTICES

22.1 All notices hereunder must be in writing and, unless otherwise provided herein, shall be deemed validly given on the date when personally delivered to the address indicated below; or on the third (3rd) business day following deposit, postage prepaid, using certified mail, return receipt requested, in any U.S. postal mailbox or at any U.S. Post Office; or when sent via nationally recognized overnight courier to the address indicated below. Should the CITY or the CONTRACTOR have a change of address, the other party shall immediately be notified in writing of such change, provided, however, that each address for notice must include a street address and not merely a post office box. All notices, demands or requests from the CONTRACTOR to the CITY shall be given to the CITY address as follows:

Clay Lindstrum, Electric Utility Director
City of Lake Worth
1900 2nd Avenue
Lake Worth, Florida 33461

All notices, demands or requests from the CITY to the CONTRACTOR shall be given to the CONTRACTOR address as follows:

Wesco Distribution
225 W. Station Square Drive, Suite 700
Pittsburgh, PA 15219

23. SEVERABILITY

23.1 Should any part, term or provision of this Agreement or any document required herein to be executed be declared invalid, void or unenforceable, all remaining parts, terms and provisions hereof shall remain in full force and effect and shall in no way be invalidated, impaired or affected thereby.

24. DELAYS AND FORCES OF NATURE

24.1 The CONTRACTOR shall not be considered in default by reason of a delay in timely performance if such delay and failure arises out of causes reasonably beyond the control of the CONTRACTOR or its subcontractors and without their fault or negligence. Upon the CONTRACTOR's request, the CITY shall consider the facts and extent of any such delay and failure to timely perform the work for reason beyond the control of the CONTRACTOR and, if the CONTRACTOR'S delay and failure to timely perform was without it or its subcontractors' fault or negligence, as determined by the CITY in its sole discretion, the time of completion shall be extended for any reasonable time that the CITY, in its sole discretion, may decide; subject to the CITY'S rights to change, terminate, or stop any or all of the work at any time. If the CONTRACTOR is delayed at any time in the progress of the work by any act or neglect of the CITY or its employees, or by any other contractor employed by the CITY, or by changes ordered by the CITY or in an unusual delay in transportation, unavoidable casualties, or any causes beyond the CONTRACTOR'S control, or by delay authorized by the CITY pending negotiation or by any cause which the CITY, in its sole discretion, shall decide justifies the delay, then the time of completion shall be extended for any reasonable time the CITY, in its sole discretion, may decide. No extension of time shall be made for any delay occurring more than five (5) days before a claim therefore is made in writing to the CITY. In the case of continuing cause of delay, only one (1) claim is necessary. The CONTRACTOR's sole remedy for a delay in completion of the work for any reason will be an extension of time to complete the work and CONTRACTOR specifically waives any right to seek any monetary damages or losses for a delay in completion of the work, including, but not limited to, waiving any right to seek monetary amounts for lost profits, additional overhead, salaries, lost productivity, efficiency losses, or any other alleged monetary losses which may be allegedly suffered by CONTRACTOR due to a delay in completion of the work.

24.2 Neither party shall be considered in default in the performance of its obligations hereunder or any of them, if such obligations were prevented or delayed by any cause, existing or future beyond the reasonable control of such party which include but are not limited to acts of God, labor disputes or civil unrest.

25. COUNTERPARTS

25.1 This Agreement may be executed in counterparts, each of which shall be an original, but all of which shall constitute one and the same document. Each of the parties shall sign a sufficient number of counterparts, so that each party will receive a fully executed original of this Agreement.

26. LIMITATIONS OF LIABILITY

26.1 Under no circumstances shall either party be liable to the other for any consequential, incidental, special, punitive, or any other form of indirect or non-compensatory damages.

27. PUBLIC ENTITY CRIMES

27.1 CONTRACTOR acknowledges and agrees that a person or affiliate who has been placed on the convicted vendor list following a conviction for a public entity crime may not submit a bid, proposal, or reply on a contract to provide any goods or services to a public entity; may not submit a bid, proposal, or reply on a contract with a public entity for the construction or repair of a public building or public work; may not submit bids, proposals, or replies on leases of real property to a public entity; may not be awarded or perform work as a contractor, supplier or sub-contractor under a contract with any public entity; and may not transact business with any public entity in excess of the threshold amount provided in Section 287.017, Florida Statues, for CATEGORY TWO for a period of 36 months following the date of being placed on the convicted vendor list. CONTRACTOR will advise the CITY immediately if it becomes aware of any violation of this statute.

28. PREPARATION

28.1 This Agreement shall not be construed more strongly against either party regardless of who was more responsible for its preparation.

29. PALM BEACH COUNTY INSPECTOR GENERAL

29.1 In accordance with Palm Beach County ordinance number 2011-009, the CONTRACTOR acknowledges that this Agreement may be subject to investigation and/or audit by the Palm Beach County Inspector General. The CONTRACTOR has

reviewed Palm Beach County ordinance number 2011-009 and is aware of its rights and/or obligations under such ordinance.

30. ENFORCEMENT COSTS

30.1 All parties shall be responsible for their own attorneys' fees, court costs and expenses if any legal action or other proceeding is brought for any dispute, disagreement, or issue of construction or interpretation arising hereunder whether relating to the Contract's execution, validity, the obligations provided therein, or performance of this Contract, or because of an alleged breach, default or misrepresentation in connection with any provisions of this Contract.

31. PUBLIC RECORDS

CONTRACTOR shall comply with Florida's Public Records Laws, and specifically agrees to:

(a) Keep and maintain public records that ordinarily and necessarily would be required by the CITY in order to perform the service.

(b) Provide the public with access to public records on the same terms and conditions that the CITY would provide the records and at a cost that does not exceed the cost provided in this Chapter 119, Florida Statutes, or as otherwise provided by law.

(c) Ensure that public records that are exempt or confidential and exempt from public records disclosure requirements are not disclosed except as authorized by law.

(d) Meet all requirements for retaining public records and transfer, at no cost, to the CITY all public records in possession of the CONTRACTOR upon termination of the Agreement and destroy any duplicate public records that are exempt or confidential and exempt from public records disclosure requirements. All records stored electronically must be provided to the City in a format that is compatible with the information technology systems of the City.

32. COPYRIGHTS AND/OR PATENT RIGHTS

32.1 CONTRACTOR warrants that there has been no violation of copyrights and/or patent rights in the manufacturing, producing of selling the goods, shipped or ordered, as a result of this proposal and the CONTRACTOR agrees to hold the City harmless from any and all liability, loss, or expense occasioned by any such violation.

33. COMPLIANCE WITH OCCUPATIONAL SAFETY AND HEALTH

33.1 CONTRACTOR certifies that all material, equipment, etc., contained in this bid meets all OSHA requirements. CONTRACTOR further certifies that, if the material, equipment, etc., delivered is subsequently found to be deficient in any OSHA requirements in effect on date of delivery, all costs necessary to bring the material, equipment, etc. into compliance with the aforementioned requirements shall be borne by the CONTRACTOR.

34. FEDERAL AND STATE TAX

34.1 The City of Lake Worth is exempt from Federal Tax and State Tax for Tangible Personal Property. The Procurement Official will sign an exemption certificate submitted by the successful Proposer. Vendors or contractors doing business with the City of Lake Worth shall not be exempted from paying sales tax to their suppliers for materials to fulfill contractual obligations with the City, nor shall any Vendor/Contractor be authorized to use the City's tax Exemption Number in securing such materials.

35. PROTECTION OF PROPERTY

35.1 The CONTRACTOR shall at all times guard against damage or loss to the property of the CITY or of other vendors or contractors and shall be held responsible for replacing or repairing any such loss or damage. The CITY may withhold payment or make such deductions as deemed necessary to insure reimbursement or replacement for loss or damage to property through negligence of the successful CONTRACTOR or its agents. The CONTRACTOR shall be responsible to safeguard all of their property such as tools and equipment while on site. The CITY will not be held responsible for any loss of CONTRACTOR property due to theft or vandalism.

36. DAMAGE TO PERSONS OR PROPERTY

36.1 The responsibility for all damage to person or property arising out of or on account of work done under this Contract shall rest upon the CONTRACTOR, and he/she shall save the CITY and political unit thereof harmless from all claims made on account of such damages.

37. WARRANTY

37.1 CONTRACTOR has provided a warranty for the three phase pad mount transformers for a period of time of 18 months after the date of shipment. CONTRACTOR agrees to pay for all transportation and handling costs of returning the transformers, if required, for repair. If the transformer must be returned, CONTRACTOR, shall provide a replacement transformer for the duration.

REMAINDER OF THIS PAGE INTENTIONALLY LEFT BLANK
SIGNATURE PAGE FOLLOWS

IN WITNESS WHEREOF the parties hereto have made and executed this Agreement on the day and year first above written.

CITY OF LAKE WORTH, FLORIDA

By: _____
Pam Triolo, Mayor

ATTEST:

_____
Pamela J. Lopez, City Clerk

Approved as to form and legal sufficiency:

_____ FOR
Glen J. Torcivia, City Attorney

CONTRACTOR: **WESCO DISTRIBUTION INC.**

By: _____

[Corporate Seal]

Print Name: CABOT GOODRUM

Title: OPERATIONS MANAGER

STATE OF FLORIDA)
COUNTY OF ORANGE)

The foregoing instrument was acknowledged before me this 14th day of October, 2014 by Cabot Goodrum, as Operations Manager (title), of Wesco Distribution, Inc., a corporation authorized to do business in the State of Florida, and who is personally known to me or who has produced the following FLORIDA DRIVER LICENSE as identification.

Notary Public

Theresa E. Underwood
Print Name: THERESA E. UNDERWOOD
My commission expires: March 7, 2017

THERESA E. UNDERWOOD
Notary Public - State of Florida
My Comm. Expires Mar 7, 2017
Commission # EE 874189

EXHIBIT "A"

WESCO DISTRIBUTION AWARD-MFG ABB (ONLY 5 ITEMS LISTED)

No.	CLW Stock#	Description	Est. Qty	Eval. Watt Losses		Fuse Size/Catalog#		Unit Price	Total
				W x 4.382 NL (CORE)	W x 1.93 FL (COIL)				
PRIMARY VOLTAGE– 13200GY/76200x26400GRDY/15240									
4	285-86-78203	Transformer, 750KVA, 3 Phase Pad-Mount	1	1111	5597			**$19,019.00**	**$19,019.00**
5	285-86-78163	Transformer, 1000KVA, 3 Phase Pad-Mount	2	1304	7664			**$21,009.00**	**$42,018.00**
PRIMARY VOLTAGE – 13200GRDY/7620X4160GRDY/2400									
6	285-86-78200	Transformer, 150KVA, 3 Phase Pad-Mount	7	350	1225			**$10,144.00**	**$71,008.00**
7	285-86-78166	Transformer, 300KVA, 3 Phase Pad-Mount	3	485	2843			**$11,665.00**	**$34,995.00**
8	285-86-78204	Transformer, 500KVA, 3 Phase Pad-Mount	2	757	4421			**$13,926.00**	**$27,852.00**

$194,892

AGREEMENT
(Purchase of Three Phase Pad Mount Transformers)

THIS AGREEMENT is made this _____day of _____, 2014 between the **City of Lake Worth**, Florida, a municipal corporation, hereinafter the "CITY", with its office located at 7 North Dixie Highway, Lake Worth, Florida 33460, and, **Gresco Utility Supply, Inc.,** a corporation authorized to do business in the State of Florida, hereinafter the "CONTRACTOR", with its office located at 6421 CR 219, Wildwood, FL 34785.

RECITALS

WHEREAS, the CITY is a municipal corporation organized and existing pursuant to the Charter and the Constitution of the State of Florida;

WHEREAS, the CITY issued Invitation for Bid #14-129 (hereinafter "IFB") for the procurement of three phase pad mount transformers;

WHEREAS, CONTRACTOR submitted a bid to provide three phase pad mount transformers as described and set out in the IFB;

WHEREAS, the CITY desires to accept a portion of CONTRACTOR's bid in order for CONTRACTOR to render the goods to the CITY as provided herein;

WHEREAS, the CONTRACTOR further warrants that it is experienced and capable of performing the tasks hereunder in a professional and competent manner;

WHEREAS, the CITY finds awarding the IFB to the CONTRACTOR as described herein serves a valid public purpose.

NOW THEREFORE, the CITY hereby engages the services of the CONTRACTOR, and in consideration of the mutual promises herein contained, the sufficiency of which is hereby acknowledged by both parties, the parties agree as follows:

1. TERM

1.1 The Contractor agrees to hold the prices listed in the IFB for a period of one year from the execution of this Agreement by the CITY

2. SCOPE OF WORK

2.1 The scope of work is the providing of the requested three phase pad mount transformers, as more specifically set forth in the IFB (the "Scope of Work"). CONTRACTOR shall provide the three phase pad mount transformers as requested by the CITY upon the issuance of a P.O., as set forth in the IFB.

2.2 The CONTRACTOR represents to the CITY that the materials provided under this Agreement shall be in accordance with accepted and established trade practices and procedures recognized in the CONTRACTOR's trade in general and that the materials shall conform to the highest standards and in accordance with this Agreement.

2.3 The CONTRACTOR represents that it is licensed to do business in the State of Florida and holds and will maintain all applicable licenses required for the work to be completed under this Agreement. The CONTRACTOR further warrants its capability and experience to perform the work provided for herein in a professional and competent manner.

2.4 All deliveries of the three phase pad mount transformers shall be in accordance with the terms set forth in the IFB.

3. USE OF AGENTS OR ASSISTANTS

3.1 To the extent reasonably necessary to enable the CONTRACTOR to perform its work hereunder, the CONTRACTOR shall be authorized to engage the services of any agents or assistants which it may deem proper, and may further employ, engage, or retain the services of such other persons or corporations to aid or assist in the proper performance of its duties. All costs of the services of, or expenses incurred by, such agents or assistants shall be paid by the CONTRACTOR.

4. MATERIALS

4.1 The CONTRACTOR shall provide all materials as more specifically set forth In Exhibit "A", attached hereto and incorporated herein, as it relates to the line items. The quantities are estimates, therefore, the CITY may order more or less than the estimated amount.

5. FEE AND ORDERING MECHANISM

5.1 For services to be rendered under this Agreement, the CONTRACTOR shall be entitled to a fee as set forth in the IFB in regards to the individual line item amount for each three phase pad mount transformer.

5.2 Should the CITY require additional materials, not included in this Agreement, fees and payment for such work will be set forth in a separate Addendum, as authorized in accordance with the CITY's procurement code prior to any such additional goods being provided by the CONTRACTOR.

5.3 The City's ordering mechanism for all work performed under this Agreement shall be a City Purchase Order; however, the terms and conditions stated in a City Purchase

Order shall not apply. CONTRACTOR shall not provide goods under this Agreement without a City Purchase Order specifically for this purpose. CONTRACTOR shall not exceed amounts expressed on the Purchase Order. Note that the City's Fiscal Year ends on September 30th of each calendar year. The City cannot authorize the purchase of goods beyond September 30th of each calendar year, prior to the annual budget being approved by the City Commission. Additionally, the City must have budgeted appropriate funds for the goods in any subsequent Fiscal Year. If the budget is approved for said goods, the City will issue a new Purchase Order each Fiscal Year, for required and approved goods.

6. MAXIMUM COSTS

6.1 The CONTRACTOR expressly acknowledges and agrees that the total cost to provide all goods is specified in the IFB and no additional costs shall be authorized without prior written approval from CITY's governing body.

7. INVOICE

7.1 The CONTRACTOR shall submit an itemized invoice to the CITY for approval prior to receiving compensation. The CONTRACTOR shall be paid within thirty (30) days of receipt of an approved invoice for work.

8. AUDIT BY CITY

8.1 The CONTRACTOR shall permit the CITY, or any authorized representatives of the CITY, at all reasonable times, access to and the right to examine all records, books, papers or documents related to the CONTRACTOR's performance under this Agreement including, but not limited to, expenses for sub-contractors, agents or assistants, direct and indirect charges for work performed and detailed documentation for all such work performed or to be performed under this Agreement.

9. COPIES OF DATA/DOCUMENTS

9.1 Copies or original documents prepared by the CONTRACTOR in relation to work associated with this Agreement shall be provided to the CITY. Data collected, stored, and/or provided shall be in a form acceptable to the CITY and agreed upon by the CITY.

10. OWNERSHIP

10.1 Each and every report, draft, work product, map, record, and other document reproduced, prepared, or caused to be prepared by the CONTRACTOR pursuant to or in connection with this Agreement shall be the exclusive property of the CITY.

11. WRITTEN AUTHORIZATION REQUIRED

11.1 The CONTRACTOR shall not make changes in the Scope of Work or perform any additional work or provide any additional material under this Agreement without first obtaining written authorization from the CITY for such additional work or materials. Additional labor or materials provided without written authorization shall be done at the CONTRACTOR's sole risk and without payment from the CITY.

12. DEFAULTS, TERMINATION OF AGREEMENT

12.1 If the CONTRACTOR fails to supply the requested three phase pad mount transformers or has failed in any other respect to satisfactorily perform the work specified in this Agreement; or, is in material breach of a term or condition of this Agreement, the Electric Utilities Director may give written notice to the CONTRACTOR specifying defaults to be remedied. Such notice shall set forth the basis for any dissatisfaction and suggest corrective measures. If the CONTRACTOR does not remedy defaults within the allotted time or commence good faith steps to remedy the default to the reasonable satisfaction of the Electric Utilities Director, the CITY may take such action to remedy the default and all expenses related thereto shall be borne by the CONTRACTOR including, without limitation, utilization of another contractor to provide for such work; and/or, the CITY may withhold any money due or which may become due to the CONTRACTOR for such expense and/or work related to the claimed default. Alternatively, or in addition to the foregoing, if after three (3) days the CONTRACTOR has not remedied defaults or commenced good faith steps to remedy defaults to the satisfaction of the Electric Utility Director, the CITY may elect to terminate this Agreement. No compensation shall be paid for de-mobilization, take-down, disengagement wind-down, lost profits or other costs incurred due to termination of this Agreement under this paragraph 12.1.

12.2 Notwithstanding paragraph 12.1, the CITY reserves the right and may elect to terminate this Agreement at any time, with or without cause. At such time, the CONTRACTOR would be compensated only for that work which has been satisfactorily completed to the date of termination. No compensation shall be paid for de-mobilization, take-down, disengagement wind-down, lost profits or other costs incurred due to termination of this Agreement under this paragraph 12.2.

13. INSURANCE

13.1. Prior to commencing any services the CONTRACTOR shall provide certificates evidencing insurance coverage as required hereunder. All insurance policies shall be issued by companies authorized to do business under the laws of the State of Florida. The Certificates shall clearly indicate that the CONTRACTOR has obtained insurance of the type, amount, and classification as required for strict compliance with this Section and that no material change or cancellation of the insurance shall be effective without

thirty (30) days' prior written notice to the CITY. Failure to comply with the foregoing requirements shall not relieve the CONTRACTOR of its liability and obligations under this Contract.

13.2. The CONTRACTOR shall maintain, during the life of this Contract, commercial general liability, including contractual liability insurance in the amount of $1,000,000 per occurrence to protect the CONTRACTOR from claims for damages for bodily and personal injury, including wrongful death, as well as from claims of property damages which may arise from any operations under this Contract, whether such operations be by the CONTRACTOR or by anyone directly employed by or contracting with the CONTRACTOR.

13.3. The CONTRACTOR shall maintain, during the life of this Contract, comprehensive automobile liability insurance in the minimum amount of $500,000 combined single limit for bodily injury and property damages liability to protect the CONTRACTOR from claims for damages for bodily and personal injury, including death, as well as from claims for property damage, which may arise from the ownership, use, or maintenance of owned and non-owned automobiles, including rented automobiles whether such operations be by the CONTRACTOR or by anyone directly or indirectly employed by the CONTRACTOR.

13.4. The CONTRACTOR shall maintain, during the life of this Contract, Workers' Compensation Insurance and Employer's Liability Insurance for all employees as required by Florida Statutes.

14. WAIVER OF BREACH

14.1 The waiver by either party of any breach of any provision of this Agreement shall not operate or be construed as a waiver of any subsequent breach of that same or any other provision.

15. INDEMNITY

15.1 The CONTRACTOR shall indemnify, defend and hold harmless, to the maximum extent permitted by law, the CITY and its officers, agents, employees and representatives, from and against any and all liability, suit, actions, proceedings, judgments, claims, losses, liens, damages, injuries (whether in contract or in tort, including personal injury, accidental death, patent infringement or property damage, and regardless, of whether the allegations are false, fraudulent or groundless), costs and expenses (including attorney's fees, litigation, arbitration, mediation, appeal expenses) to the extent arising out of or alleged to have arisen out of the acts or neglect of its agents, employees, subcontractors or by anyone the CONTRACTOR directly or indirectly employed.

15.2 The CONTRACTOR's obligation to indemnify, defend and hold harmless shall remain in effect and shall be binding upon the CONTRACTOR whether such injury or damage shall accrue, or may be discovered, before or after termination of this Agreement.

15.3 The CONTRACTOR's failure to comply with this section's provisions shall constitute a material breach upon which the CITY may immediately terminate or suspend this Agreement.

16. ENTIRE AGREEMENT AND ORDER OF PRECEDENCE

16.1 This Agreement consists of the terms and conditions provided herein; the IFB (including all specifications, exhibits and addenda attached thereto or referenced therein); and, the CONTRACTOR's responsive bid. To the extent that there exists a conflict between this Agreement and the remaining documents, the terms, conditions, covenants, and/or provisions of this Agreement shall prevail with the IFB (including all specifications, exhibits and addenda attached thereto) next taking precedence. Wherever possible, the provisions of such documents shall be construed in such a manner as to avoid conflicts between provisions of the various documents.

16.2 This Agreement supersedes any and all other Agreements, either oral or in writing, between the parties hereto with respect to the subject matter hereof, and no other Agreement, statement, or promise relating to the subject matter of this Agreement which is not contained herein shall be valid or binding.

17. ASSIGNMENT

17.1 Nothing under this Agreement shall be construed to give any rights or benefits to any party other than the CITY and the CONTRACTOR. All duties and responsibilities under this Agreement shall be for the sole and exclusive benefit of the CITY and the CONTRACTOR and not for the benefit or any other party. The CONTRACTOR shall not assign any right or interest in this Agreement, and shall not delegate any duty owned, without the CITY's prior written consent. Any attempted assignment or delegation shall be void and totally ineffective for all purposes, and shall constitute a material breach upon which the CITY may immediately terminate or suspend this Agreement.

17.2 In the event the CITY consents to an assignment or delegation, the assignee, delegate, or its legal representative shall agree in writing to personally assume, perform, and be bound by this Agreement's covenants, conditions, obligations and provisions.

18. SUCCESSORS AND ASSIGNS

18.1 Subject to the provision regarding assignment, this Agreement shall be binding on the heirs, executors, administrators, successors, and assigns of the respective parties.

19. WAIVER OF TRIAL BY JURY

19.1 TO ENCOURAGE PROMPT AND EQUITABLE RESOLUTION OF ANY LITIGATION, EACH PARTY HEREBY WAIVES ITS RIGHTS TO A TRIAL BY JURY IN ANY LITIGATION RELATED TO THIS AGREEMENT.

20. GOVERNING LAW AND REMEDIES

20.1 The validity of this Agreement and of any of its terms or provisions, as well as the rights and duties of the parties hereunder, shall be governed by the laws of the State of Florida and venue shall be in Palm Beach County, Florida.

20.2 No remedy herein conferred upon any party is intended to be exclusive of any other remedy, and each and every such remedy shall be cumulative and shall be in addition to every other remedy given hereunder or now or hereafter existing at law or in equity or by statute or otherwise. No single or partial exercise by any party of any right, power, or remedy hereunder shall preclude any other or further exercise thereof.

21. TIME IS OF THE ESSENCE

21.1 Time is of the essence in the delivery of the goods as specified herein.

22. NOTICES

22.1 All notices hereunder must be in writing and, unless otherwise provided herein, shall be deemed validly given on the date when personally delivered to the address indicated below; or on the third (3rd) business day following deposit, postage prepaid, using certified mail, return receipt requested, in any U.S. postal mailbox or at any U.S. Post Office; or when sent via nationally recognized overnight courier to the address indicated below. Should the CITY or the CONTRACTOR have a change of address, the other party shall immediately be notified in writing of such change, provided, however, that each address for notice must include a street address and not merely a post office box. All notices, demands or requests from the CONTRACTOR to the CITY shall be given to the CITY address as follows:

Clay Lindstrum, Electric Utility Director
City of Lake Worth
1900 2nd Avenue
Lake Worth, Florida 33461

All notices, demands or requests from the CITY to the CONTRACTOR shall be given to the CONTRACTOR address as follows:

Gresco Utility Supply, Inc.
6421 CR 219
Wildwood, FL 34785

23. SEVERABILITY

23.1 Should any part, term or provision of this Agreement or any document required herein to be executed be declared invalid, void or unenforceable, all remaining parts, terms and provisions hereof shall remain in full force and effect and shall in no way be invalidated, impaired or affected thereby.

24. DELAYS AND FORCES OF NATURE

24.1 The CONTRACTOR shall not be considered in default by reason of a delay in timely performance if such delay and failure arises out of causes reasonably beyond the control of the CONTRACTOR or its subcontractors and without their fault or negligence. Upon the CONTRACTOR's request, the CITY shall consider the facts and extent of any such delay and failure to timely perform the work for reason beyond the control of the CONTRACTOR and, if the CONTRACTOR'S delay and failure to timely perform was without it or its subcontractors' fault or negligence, as determined by the CITY in its sole discretion, the time of completion shall be extended for any reasonable time that the CITY, in its sole discretion, may decide; subject to the CITY'S rights to change, terminate, or stop any or all of the work at any time. If the CONTRACTOR is delayed at any time in the progress of the work by any act or neglect of the CITY or its employees, or by any other contractor employed by the CITY, or by changes ordered by the CITY or in an unusual delay in transportation, unavoidable casualties, or any causes beyond the CONTRACTOR'S control, or by delay authorized by the CITY pending negotiation or by any cause which the CITY, in its sole discretion, shall decide justifies the delay, then the time of completion shall be extended for any reasonable time the CITY, in its sole discretion, may decide. No extension of time shall be made for any delay occurring more than five (5) days before a claim therefore is made in writing to the CITY. In the case of continuing cause of delay, only one (1) claim is necessary. The CONTRACTOR's sole remedy for a delay in completion of the work for any reason will be an extension of time to complete the work and CONTRACTOR specifically waives any right to seek any monetary damages or losses for a delay in completion of the work, including, but not limited to, waiving any right to seek monetary amounts for lost profits, additional overhead, salaries, lost productivity, efficiency losses, or any other alleged monetary losses which may be allegedly suffered by CONTRACTOR due to a delay in completion of the work.

24.2 Neither party shall be considered in default in the performance of its obligations hereunder or any of them, if such obligations were prevented or delayed by any cause, existing or future beyond the reasonable control of such party which include but are not limited to acts of God, labor disputes or civil unrest.

25. COUNTERPARTS

25.1 This Agreement may be executed in counterparts, each of which shall be an original, but all of which shall constitute one and the same document. Each of the parties shall sign a sufficient number of counterparts, so that each party will receive a fully executed original of this Agreement.

26. LIMITATIONS OF LIABILITY

26.1 Under no circumstances shall either party be liable to the other for any consequential, incidental, special, punitive, or any other form of indirect or non-compensatory damages.

27. PUBLIC ENTITY CRIMES

27.1 CONTRACTOR acknowledges and agrees that a person or affiliate who has been placed on the convicted vendor list following a conviction for a public entity crime may not submit a bid, proposal, or reply on a contract to provide any goods or services to a public entity; may not submit a bid, proposal, or reply on a contract with a public entity for the construction or repair of a public building or public work; may not submit bids, proposals, or replies on leases of real property to a public entity; may not be awarded or perform work as a contractor, supplier or sub-contractor under a contract with any public entity; and may not transact business with any public entity in excess of the threshold amount provided in Section 287.017, Florida Statues, for CATEGORY TWO for a period of 36 months following the date of being placed on the convicted vendor list. CONTRACTOR will advise the CITY immediately if it becomes aware of any violation of this statute.

28. PREPARATION

28.1 This Agreement shall not be construed more strongly against either party regardless of who was more responsible for its preparation.

29. PALM BEACH COUNTY INSPECTOR GENERAL

29.1 In accordance with Palm Beach County ordinance number 2011-009, the CONTRACTOR acknowledges that this Agreement may be subject to investigation and/or audit by the Palm Beach County Inspector General. The CONTRACTOR has

reviewed Palm Beach County ordinance number 2011-009 and is aware of its rights and/or obligations under such ordinance.

30. ENFORCEMENT COSTS

30.1 All parties shall be responsible for their own attorneys' fees, court costs and expenses if any legal action or other proceeding is brought for any dispute, disagreement, or issue of construction or interpretation arising hereunder whether relating to the Contract's execution, validity, the obligations provided therein, or performance of this Contract, or because of an alleged breach, default or misrepresentation in connection with any provisions of this Contract.

31. PUBLIC RECORDS

CONTRACTOR shall comply with Florida's Public Records Laws, and specifically agrees to:

(a) Keep and maintain public records that ordinarily and necessarily would be required by the CITY in order to perform the service.

(b) Provide the public with access to public records on the same terms and conditions that the CITY would provide the records and at a cost that does not exceed the cost provided in this Chapter 119, Florida Statutes, or as otherwise provided by law.

(c) Ensure that public records that are exempt or confidential and exempt from public records disclosure requirements are not disclosed except as authorized by law.

(d) Meet all requirements for retaining public records and transfer, at no cost, to the CITY all public records in possession of the CONTRACTOR upon termination of the Agreement and destroy any duplicate public records that are exempt or confidential and exempt from public records disclosure requirements. All records stored electronically must be provided to the City in a format that is compatible with the information technology systems of the City.

32. COPYRIGHTS AND/OR PATENT RIGHTS

32.1 CONTRACTOR warrants that there has been no violation of copyrights and/or patent rights in the manufacturing, producing of selling the goods, shipped or ordered, as a result of this proposal and the CONTRACTOR agrees to hold the City harmless from any and all liability, loss, or expense occasioned by any such violation.

33. COMPLIANCE WITH OCCUPATIONAL SAFETY AND HEALTH

33.1 CONTRACTOR certifies that all material, equipment, etc., contained in this bid meets all OSHA requirements. CONTRACTOR further certifies that, if the material, equipment, etc., delivered is subsequently found to be deficient in any OSHA requirements in effect on date of delivery, all costs necessary to bring the material, equipment, etc. into compliance with the aforementioned requirements shall be borne by the CONTRACTOR.

34. FEDERAL AND STATE TAX

34.1 The City of Lake Worth is exempt from Federal Tax and State Tax for Tangible Personal Property. The Procurement Official will sign an exemption certificate submitted by the successful Proposer. Vendors or contractors doing business with the City of Lake Worth shall not be exempted from paying sales tax to their suppliers for materials to fulfill contractual obligations with the City, nor shall any Vendor/Contractor be authorized to use the City's tax Exemption Number in securing such materials.

35. PROTECTION OF PROPERTY

35.1 The CONTRACTOR shall at all times guard against damage or loss to the property of the CITY or of other vendors or contractors and shall be held responsible for replacing or repairing any such loss or damage. The CITY may withhold payment or make such deductions as deemed necessary to insure reimbursement or replacement for loss or damage to property through negligence of the successful CONTRACTOR or its agents. The CONTRACTOR shall be responsible to safeguard all of their property such as tools and equipment while on site. The CITY will not be held responsible for any loss of CONTRACTOR property due to theft or vandalism.

36. DAMAGE TO PERSONS OR PROPERTY

36.1 The responsibility for all damage to person or property arising out of or on account of work done under this Contract shall rest upon the CONTRACTOR, and he/she shall save the CITY and political unit thereof harmless from all claims made on account of such damages.

37. WARRANTY

37.1 CONTRACTOR has provided a warranty for the three phase pad mount transformers for a period of time of 24 months after the date of shipment. CONTRACTOR agrees to pay for all transportation and handling costs of returning the transformers, if required, for repair. If the transformer must be returned, CONTRACTOR, shall provide a replacement transformer for the duration.

REMAINDER OF THIS PAGE INTENTIONALLY LEFT BLANK
SIGNATURE PAGE FOLLOWS

IN WITNESS WHEREOF the parties hereto have made and executed this Agreement on the day and year first above written.

CITY OF LAKE WORTH, FLORIDA

By: _____
Pam Triolo, Mayor

ATTEST:

_____
Pamela J. Lopez, City Clerk

Approved as to form and legal sufficiency:

_____
Glen J. Torcivia, City Attorney

CONTRACTOR: **GRESCO UTILITY SUPPLY, INC.**

By: _____

[Corporate Seal]

Print Name: LANCE KINNEY

Title: INSIDE SALES

STATE OF Florida)
COUNTY OF Sumter)

The foregoing instrument was acknowledged before me this 7th day of October, 2014 by Lance Kinney, as Sales Coordinator (title), of Gresco Utility Supply, Inc., a corporation authorized to do business in the State of Florida, and who is personally known to me or who has produced the following _____ as identification.

Notary Public

Print Name: Sharon L. McCray
My commission expires: 11/2/14

SHARON L MCCRAY
Notary Public - State of Florida
My Comm. Expires Nov 2, 2014
Commission # EE 37086
Bonded Through National Notary Assn.

EXHIBIT "A"

GRESCO UTILITY SUPPLY AWARD-MFG ERMCO (ONLY THE 3 ITEMS LISTED)

No.	CLW Stock#	Description	Est. Qty	Eval. Watt Losses		Fuse Size/Catalog#		Unit Price	Total
				W x 4.382 NL (CORE)	W x 1.93 FL (COIL)				
PRIMARY VOLTAGE– 13200GY/76200x26400GRDY/15240									
1	285-86-78165	Transformer, 150KVA, 3 Phase Pad-Mount	13	269	1681	NONE	150	$8,505.00	$110,565.00
2	285-86-78167	Transformer, 300KVA, 3 Phase Pad-Mount	5	426	2943	NONE	300	$11,292.00	$56,460.00
3	285-86-78168	Transformer, 500KVA, 3 Phase Pad-Mount	2	624	5100	NONE	500	$13,593.00	$27,186.00

$194,211

AGREEMENT
(Purchase of Overhead Distribution Transformers)

THIS AGREEMENT is made this _____day of _____, 2014 between the **City of Lake Worth**, Florida, a municipal corporation, hereinafter the "CITY", with its office located at 7 North Dixie Highway, Lake Worth, Florida 33460, and, **HD Supply Power Solutions, LTD.,** a corporation authorized to do business in the State of Florida, hereinafter the "CONTRACTOR", with its office located at 3881 Old Winter Garden Rd., Orlando, FL 32805.

RECITALS

WHEREAS, the CITY is a municipal corporation organized and existing pursuant to the Charter and the Constitution of the State of Florida;

WHEREAS, the CITY issued Invitation for Bid #14-131 (hereinafter "IFB") for the procurement of overhead distribution transformers;

WHEREAS, CONTRACTOR submitted a bid to provide the overhead distribution transformers as described and set out in the IFB;

WHEREAS, the CITY desires to accept CONTRACTOR's bid in order for CONTRACTOR to render the goods to the CITY as provided herein;

WHEREAS, the CONTRACTOR further warrants that it is experienced and capable of performing the tasks hereunder in a professional and competent manner;

WHEREAS, the CITY finds awarding the IFB to the CONTRACTOR as described herein serves a valid public purpose.

NOW THEREFORE, the CITY hereby engages the services of the CONTRACTOR, and in consideration of the mutual promises herein contained, the sufficiency of which is hereby acknowledged by both parties, the parties agree as follows:

1. TERM

1.1 The Contractor agrees to hold the prices listed in the IFB for a period of one year from the execution of this Agreement by the CITY

2. SCOPE OF WORK

2.1 The scope of work is the providing of the requested overhead distribution transformers, as more specifically set forth in the IFB (the "Scope of Work").

CONTRACTOR shall provide the overhead distribution transformers as requested by the CITY upon the issuance of a P.O., as set forth in the IFB.

2.2 The CONTRACTOR represents to the CITY that the materials provided under this Agreement shall be in accordance with accepted and established trade practices and procedures recognized in the CONTRACTOR's trade in general and that the materials shall conform to the highest standards and in accordance with this Agreement.

2.3 The CONTRACTOR represents that it is licensed to do business in the State of Florida and holds and will maintain all applicable licenses required for the work to be completed under this Agreement. The CONTRACTOR further warrants its capability and experience to perform the work provided for herein in a professional and competent manner.

2.4 All deliveries of the overhead distribution transformers shall be in accordance with the terms set forth in the IFB.

3. USE OF AGENTS OR ASSISTANTS

3.1 To the extent reasonably necessary to enable the CONTRACTOR to perform its work hereunder, the CONTRACTOR shall be authorized to engage the services of any agents or assistants which it may deem proper, and may further employ, engage, or retain the services of such other persons or corporations to aid or assist in the proper performance of its duties. All costs of the services of, or expenses incurred by, such agents or assistance shall be paid by the CONTRACTOR.

4. MATERIALS

4.1 The CONTRACTOR shall provide all materials as more specifically set forth in the IFB.

5. FEE AND ORDERING MECHANISM

5.1 For services to be rendered under this Agreement, the CONTRACTOR shall be entitled to a fee as set forth in the IFB in regards to the total amount and to the individual amount for each overhead distribution transformer.

5.2 Should the CITY require additional materials, not included in this Agreement, fees and payment for such work will be set forth in a separate Addendum, as authorized in accordance with the CITY's procurement code prior to any such additional goods being provided by the CONTRACTOR.

5.3 The City's ordering mechanism for all work performed under this Agreement shall be a City Purchase Order; however, the terms and conditions stated in a City Purchase Order shall not apply. CONTRACTOR shall not provide goods under this Agreement without a City Purchase Order specifically for this purpose. CONTRACTOR shall not exceed amounts expressed on the Purchase Order. Note that the City's Fiscal Year ends on September 30th of each calendar year. The City cannot authorize the purchase of goods beyond September 30th of each calendar year, prior to the annual budget being approved by the City Commission. Additionally, the City must have budgeted appropriate funds for the goods in any subsequent Fiscal Year. If the budget is approved for said goods, the City will issue a new Purchase Order each Fiscal Year, for required and approved goods.

6. MAXIMUM COSTS

6.1 The CONTRACTOR expressly acknowledges and agrees that the total cost to provide all goods is specified in the IFB and no additional costs shall be authorized without prior written approval from CITY's governing body.

7. INVOICE

7.1 The CONTRACTOR shall submit an itemized invoice to the CITY for approval prior to receiving compensation. The CONTRACTOR shall be paid within thirty (30) days of receipt of an approved invoice for work.

8. AUDIT BY CITY

8.1 The CONTRACTOR shall permit the CITY, or any authorized representatives of the CITY, at all reasonable times, access to and the right to examine all records, books, papers or documents related to the CONTRACTOR's performance under this Agreement including, but not limited to, expenses for sub-contractors, agents or assistants, direct and indirect charges for work performed and detailed documentation for all such work performed or to be performed under this Agreement.

9. COPIES OF DATA/DOCUMENTS

9.1 Copies or original documents prepared by the CONTRACTOR in relation to work associated with this Agreement shall be provided to the CITY. Data collected, stored, and/or provided shall be in a form acceptable to the CITY and agreed upon by the CITY.

10. OWNERSHIP

10.1 Each and every report, draft, work product, map, record, and other document reproduced, prepared, or caused to be prepared by the CONTRACTOR pursuant to or in connection with this Agreement shall be the exclusive property of the CITY.

11. WRITTEN AUTHORIZATION REQUIRED

11.1 The CONTRACTOR shall not make changes in the Scope of Work or perform any additional work or provide any additional material under this Agreement without first obtaining written authorization from the CITY for such additional work or materials. Additional labor or materials provided without written authorization shall be done at the CONTRACTOR's sole risk and without payment from the CITY.

12. DEFAULTS, TERMINATION OF AGREEMENT

12.1 If the CONTRACTOR fails to supply the requested overhead distribution transformers or has failed in any other respect to satisfactorily perform the work specified in this Agreement; or, is in material breach of a term or condition of this Agreement, the Electric Utilities Director may give written notice to the CONTRACTOR specifying defaults to be remedied. Such notice shall set forth the basis for any dissatisfaction and suggest corrective measures. If the CONTRACTOR does not remedy defaults within the allotted time or commence good faith steps to remedy the default to the reasonable satisfaction of the Electric Utilities Director, the CITY may take such action to remedy the default and all expenses related thereto shall be borne by the CONTRACTOR including, without limitation, utilization of another contractor to provide for such work; and/or, the CITY may withhold any money due or which may become due to the CONTRACTOR for such expense and/or work related to the claimed default. Alternatively, or in addition to the foregoing, if after three (3) days the CONTRACTOR has not remedied defaults or commenced good faith steps to remedy defaults to the satisfaction of the Electric Utility Director, the CITY may elect to terminate this Agreement. No compensation shall be paid for de-mobilization, take-down, disengagement wind-down, lost profits or other costs incurred due to termination of this Agreement under this paragraph 12.1.

12.2 Notwithstanding paragraph 12.1, the CITY reserves the right and may elect to terminate this Agreement at any time, with or without cause. At such time, the CONTRACTOR would be compensated only for that work which has been satisfactorily completed to the date of termination. No compensation shall be paid for de-mobilization, take-down, disengagement wind-down, lost profits or other costs incurred due to termination of this Agreement under this paragraph 12.2.

13. INSURANCE

13.1. Prior to commencing any services the CONTRACTOR shall provide certificates evidencing insurance coverage as required hereunder. All insurance policies shall be issued by companies authorized to do business under the laws of the State of Florida. The Certificates shall clearly indicate that the CONTRACTOR has obtained insurance of the type, amount, and classification as required for strict compliance with this Section

and that no material change or cancellation of the insurance shall be effective without thirty (30) days' prior written notice to the TOWN. Failure to comply with the foregoing requirements shall not relieve the CONTRACTOR of its liability and obligations under this Contract.

13.2. The CONTRACTOR shall maintain, during the life of this Contract, commercial general liability, including contractual liability insurance in the amount of $1,000,000 per occurrence to protect the CONTRACTOR from claims for damages for bodily and personal injury, including wrongful death, as well as from claims of property damages which may arise from any operations under this Contract, whether such operations be by the CONTRACTOR or by anyone directly employed by or contracting with the CONTRACTOR.

13.3. The CONTRACTOR shall maintain, during the life of this Contract, comprehensive automobile liability insurance in the minimum amount of $500,000 combined single limit for bodily injury and property damages liability to protect the CONTRACTOR from claims for damages for bodily and personal injury, including death, as well as from claims for property damage, which may arise from the ownership, use, or maintenance of owned and non-owned automobiles, including rented automobiles whether such operations be by the CONTRACTOR or by anyone directly or indirectly employed by the CONTRACTOR.

13.4. The CONTRACTOR shall maintain, during the life of this Contract, Workers' Compensation Insurance and Employer's Liability Insurance for all employees as required by Florida Statutes.

14. WAIVER OF BREACH

14.1 The waiver by either party of any breach of any provision of this Agreement shall not operate or be construed as a waiver of any subsequent breach of that same or any other provision.

15. INDEMNITY

15.1 The CONTRACTOR shall indemnify, defend and hold harmless, to the maximum extent permitted by law, the CITY and its officers, agents, employees and representatives, from and against any and all liability, suit, actions, proceedings, judgments, claims, losses, liens, damages, injuries (whether in contract or in tort, including personal injury, accidental death, patent infringement or property damage, and regardless, of whether the allegations are false, fraudulent or groundless), costs and expenses (including attorney's fees, litigation, arbitration, mediation, appeal expenses) to the extent arising out of or alleged to have arisen out of the acts or neglect of its agents, employees, subcontractors or by anyone the CONTRACTOR directly or indirectly employed.

15.2 The CONTRACTOR's obligation to indemnify, defend and hold harmless shall remain in effect and shall be binding upon the CONTRACTOR whether such injury or damage shall accrue, or may be discovered, before or after termination of this Agreement.

15.3 The CONTRACTOR's failure to comply with this section's provisions shall constitute a material breach upon which the CITY may immediately terminate or suspend this Agreement.

16. ENTIRE AGREEMENT AND ORDER OF PRECEDENCE

16.1 This Agreement consists of the terms and conditions provided herein; the IFB (including all specifications, exhibits and addenda attached thereto or referenced therein); and, the CONTRACTOR's responsive bid **(excluding the terms and conditions listed by the CONTRACTOR in its response to the bid)**. To the extent that there exists a conflict between this Agreement and the remaining documents, the terms, conditions, covenants, and/or provisions of this Agreement shall prevail with the IFB (including all specifications, exhibits and addenda attached thereto) next taking precedence. Wherever possible, the provisions of such documents shall be construed in such a manner as to avoid conflicts between provisions of the various documents.

16.2 This Agreement supersedes any and all other Agreements, either oral or in writing, between the parties hereto with respect to the subject matter hereof, and no other Agreement, statement, or promise relating to the subject matter of this Agreement which is not contained herein shall be valid or binding.

17. ASSIGNMENT

17.1 Nothing under this Agreement shall be construed to give any rights or benefits to any party other than the CITY and the CONTRACTOR. All duties and responsibilities under this Agreement shall be for the sole and exclusive benefit of the CITY and the CONTRACTOR and not for the benefit or any other party. The CONTRACTOR shall not assign any right or interest in this Agreement, and shall not delegate any duty owned, without the CITY's prior written consent. Any attempted assignment or delegation shall be void and totally ineffective for all purposes, and shall constitute a material breach upon which the CITY may immediately terminate or suspend this Agreement.

17.2 In the event the CITY consents to an assignment or delegation, the assignee, delegate, or its legal representative shall agree in writing to personally assume, perform, and be bound by this Agreement's covenants, conditions, obligations and provisions.

18. SUCCESSORS AND ASSIGNS

18.1 Subject to the provision regarding assignment, this Agreement shall be binding on the heirs, executors, administrators, successors, and assigns of the respective parties.

19. WAIVER OF TRIAL BY JURY

19.1 TO ENCOURAGE PROMPT AND EQUITABLE RESOLUTION OF ANY LITIGATION, EACH PARTY HEREBY WAIVES ITS RIGHTS TO A TRIAL BY JURY IN ANY LITIGATION RELATED TO THIS AGREEMENT.

20. GOVERNING LAW AND REMEDIES

20.1 The validity of this Agreement and of any of its terms or provisions, as well as the rights and duties of the parties hereunder, shall be governed by the laws of the State of Florida and venue shall be in Palm Beach County, Florida.

20.2 No remedy herein conferred upon any party is intended to be exclusive of any other remedy, and each and every such remedy shall be cumulative and shall be in addition to every other remedy given hereunder or now or hereafter existing at law or in equity or by statute or otherwise. No single or partial exercise by any party of any right, power, or remedy hereunder shall preclude any other or further exercise thereof.

21. TIME IS OF THE ESSENCE

21.1 Time is of the essence in the delivery of the goods as specified herein.

22. NOTICES

22.1 All notices hereunder must be in writing and, unless otherwise provided herein, shall be deemed validly given on the date when personally delivered to the address indicated below; or on the third (3rd) business day following deposit, postage prepaid, using certified mail, return receipt requested, in any U.S. postal mailbox or at any U.S. Post Office; or when sent via nationally recognized overnight courier to the address indicated below. Should the CITY or the CONTRACTOR have a change of address, the other party shall immediately be notified in writing of such change, provided, however, that each address for notice must include a street address and not merely a post office box. All notices, demands or requests from the CONTRACTOR to the CITY shall be given to the CITY address as follows:

Clay Lindstrum, Electric Utility Director
City of Lake Worth
1900 2nd Avenue
Lake Worth, Florida 33461

All notices, demands or requests from the CITY to the CONTRACTOR shall be given to the CONTRACTOR address as follows:

HD Supply Power Solutions, LTD.
3881 Old Winter Garden Road
Orlando, FL 32805

23. SEVERABILITY

23.1 Should any part, term or provision of this Agreement or any document required herein to be executed be declared invalid, void or unenforceable, all remaining parts, terms and provisions hereof shall remain in full force and effect and shall in no way be invalidated, impaired or affected thereby.

24. DELAYS AND FORCES OF NATURE

24.1 The CONTRACTOR shall not be considered in default by reason of a delay in timely performance if such delay and failure arises out of causes reasonably beyond the control of the CONTRACTOR or its subcontractors and without their fault or negligence. Upon the CONTRACTOR's request, the CITY shall consider the facts and extent of any such delay and failure to timely perform the work for reason beyond the control of the CONTRACTOR and, if the CONTRACTOR'S delay and failure to timely perform was without it or its subcontractors' fault or negligence, as determined by the CITY in its sole discretion, the time of completion shall be extended for any reasonable time that the CITY, in its sole discretion, may decide; subject to the CITY'S rights to change, terminate, or stop any or all of the work at any time. If the CONTRACTOR is delayed at any time in the progress of the work by any act or neglect of the CITY or its employees, or by any other contractor employed by the CITY, or by changes ordered by the CITY or in an unusual delay in transportation, unavoidable casualties, or any causes beyond the CONTRACTOR'S control, or by delay authorized by the CITY pending negotiation or by any cause which the CITY, in its sole discretion, shall decide justifies the delay, then the time of completion shall be extended for any reasonable time the CITY, in its sole discretion, may decide. No extension of time shall be made for any delay occurring more than five (5) days before a claim therefore is made in writing to the CITY. In the case of continuing cause of delay, only one (1) claim is necessary. The CONTRACTOR's sole remedy for a delay in completion of the work for any reason will be an extension of time to complete the work and CONTRACTOR specifically waives any right to seek any monetary damages or losses for a delay in completion of the work, including, but not limited to, waiving any right to seek monetary amounts for lost profits, additional overhead, salaries, lost productivity, efficiency losses, or any other alleged

monetary losses which may be allegedly suffered by CONTRACTOR due to a delay in completion of the work.

24.2 Neither party shall be considered in default in the performance of its obligations hereunder or any of them, if such obligations were prevented or delayed by any cause, existing or future beyond the reasonable control of such party which include but are not limited to acts of God, labor disputes or civil unrest.

25. COUNTERPARTS

25.1 This Agreement may be executed in counterparts, each of which shall be an original, but all of which shall constitute one and the same document. Each of the parties shall sign a sufficient number of counterparts, so that each party will receive a fully executed original of this Agreement.

26. LIMITATIONS OF LIABILITY

26.1 Under no circumstances shall either party be liable to the other for any consequential, incidental, special, punitive, or any other form of indirect or non-compensatory damages.

27. PUBLIC ENTITY CRIMES

27.1 CONTRACTOR acknowledges and agrees that a person or affiliate who has been placed on the convicted vendor list following a conviction for a public entity crime may not submit a bid, proposal, or reply on a contract to provide any goods or services to a public entity; may not submit a bid, proposal, or reply on a contract with a public entity for the construction or repair of a public building or public work; may not submit bids, proposals, or replies on leases of real property to a public entity; may not be awarded or perform work as a contractor, supplier or sub-contractor under a contract with any public entity; and may not transact business with any public entity in excess of the threshold amount provided in Section 287.017, Florida Statues, for CATEGORY TWO for a period of 36 months following the date of being placed on the convicted vendor list. CONTRACTOR will advise the CITY immediately if it becomes aware of any violation of this statute.

28. PREPARATION

28.1 This Agreement shall not be construed more strongly against either party regardless of who was more responsible for its preparation.

29. PALM BEACH COUNTY INSPECTOR GENERAL

29.1 In accordance with Palm Beach County ordinance number 2011-009, the CONTRACTOR acknowledges that this Agreement may be subject to investigation and/or audit by the Palm Beach County Inspector General. The CONTRACTOR has reviewed Palm Beach County ordinance number 2011-009 and is aware of its rights and/or obligations under such ordinance.

30. ENFORCEMENT COSTS

30.1 All parties shall be responsible for their own attorneys' fees, court costs and expenses if any legal action or other proceeding is brought for any dispute, disagreement, or issue of construction or interpretation arising hereunder whether relating to the Contract's execution, validity, the obligations provided therein, or performance of this Contract, or because of an alleged breach, default or misrepresentation in connection with any provisions of this Contract.

31. PUBLIC RECORDS

CONTRACTOR shall comply with Florida's Public Records Laws, and specifically agrees to:

(a) Keep and maintain public records that ordinarily and necessarily would be required by the CITY in order to perform the service.

(b) Provide the public with access to public records on the same terms and conditions that the CITY would provide the records and at a cost that does not exceed the cost provided in this Chapter 119, Florida Statutes, or as otherwise provided by law.

(c) Ensure that public records that are exempt or confidential and exempt from public records disclosure requirements are not disclosed except as authorized by law.

(d) Meet all requirements for retaining public records and transfer, at no cost, to the CITY all public records in possession of the CONTRACTOR upon termination of the Agreement and destroy any duplicate public records that are exempt or confidential and exempt from public records disclosure requirements. All records stored electronically must be provided to the City in a format that is compatible with the information technology systems of the City.

32. COPYRIGHTS AND/OR PATENT RIGHTS

32.1 CONTRACTOR warrants that there has been no violation of copyrights and/or patent rights in the manufacturing, producing of selling the goods, shipped or ordered,

as a result of this proposal and the CONTRACTOR agrees to hold the City harmless from any and all liability, loss, or expense occasioned by any such violation.

33. COMPLIANCE WITH OCCUPATIONAL SAFETY AND HEALTH

33.1 CONTRACTOR certifies that all material, equipment, etc., contained in this bid meets all OSHA requirements. CONTRACTOR further certifies that, if the material, equipment, etc., delivered is subsequently found to be deficient in any OSHA requirements in effect on date of delivery, all costs necessary to bring the material, equipment, etc. into compliance with the aforementioned requirements shall be borne by the CONTRACTOR.

34. FEDERAL AND STATE TAX

34.1 The City of Lake Worth is exempt from Federal Tax and State Tax for Tangible Personal Property. The Procurement Official will sign an exemption certificate submitted by the successful Proposer. Vendors or contractors doing business with the City of Lake Worth shall not be exempted from paying sales tax to their suppliers for materials to fulfill contractual obligations with the City, nor shall any Vendor/Contractor be authorized to use the City's tax Exemption Number in securing such materials.

35. PROTECTION OF PROPERTY

35.1 The CONTRACTOR shall at all times guard against damage or loss to the property of the CITY or of other vendors or contractors and shall be held responsible for replacing or repairing any such loss or damage. The CITY may withhold payment or make such deductions as deemed necessary to insure reimbursement or replacement for loss or damage to property through negligence of the successful CONTRACTOR or its agents. The CONTRACTOR shall be responsible to safeguard all of their property such as tools and equipment while on site. The CITY will not be held responsible for any loss of CONTRACTOR property due to theft or vandalism.

36. DAMAGE TO PERSONS OR PROPERTY

36.1 The responsibility for all damage to person or property arising out of or on account of work done under this Contract shall rest upon the CONTRACTOR, and he/she shall save the CITY and political unit thereof harmless from all claims made on account of such damages.

REMAINDER OF THIS PAGE INTENTIONALLY LEFT BLANK
SIGNATURE PAGE FOLLOWS

IN WITNESS WHEREOF the parties hereto have made and executed this Agreement on the day and year first above written.

CITY OF LAKE WORTH, FLORIDA

By: _____
Pam Triolo, Mayor

ATTEST:

_____
Pamela J. Lopez, City Clerk

Approved as to form and legal sufficiency:

_____ FIR
Glen J. Torcivia, City Attorney

CONTRACTOR: **HD SUPPLY POWER SOLUTIONS LTD.**

By: _____

[Corporate Seal]

Print Name: Dennis Smith

Title: RVP - Public Power

STATE OF Florida)
COUNTY OF Orange)

The foregoing instrument was acknowledged before me this 8th day of October, 2014 by Dennis Smith, as RVP-Public Power (title), of HD Supply Power Solutions, LTD., a corporation authorized to do business in the State of Florida, and who is personally known to me or who has produced the following _____ as identification.

Notary Public

Notary Public State of Florida
Samantha Barnett
My Commission FF 128576
Expires 06/03/2018

_____
Print Name: Samantha Barnett
My commission expires: 6/3/18

CITY OF LAKE WORTH

7 North Dixie Highway · Lake Worth, Florida 33460 · Phone: 561-586-1600· Fax: 561-586-1750

AGENDA DATE: December 2, 2014, Regular Meeting **DEPARTMENT:** Electric Utility

---

EXECUTIVE BRIEF

TITLE:
Florida Municipal Electric Association Membership dues for Fiscal Year 2014-2015

SUMMARY:

This Item will authorize annual membership in the Florida Municipal Electric Association between October 2014 through September 2015.

BACKGROUND AND JUSTIFICATION:
The Florida Municipal Electric Association (FMEA) represents the unified interests of 34 public power communities across Florida. FMEA is affiliated with and works closely with the American Public Power Association (APPA) on regulatory issues facing the electric industry. Together, FMEA staff and municipal utility members work to protect public power's legislative, regulatory and operational interests in Tallahassee and Washington, D.C.

As a member of this association, the City of Lake Worth has legal, legislative, and regulatory representation that provides the ability to impact the outcome of important decisions that directly impact electric utility customers. Together, FMEA members represent 14% of Florida's market share of the electric utility industry.

Participation in membership of the FMEA benefits the City through the following committees:

- Legislative and Regulatory: This committee meets on an as-needed basis and oversees the legislative and regulatory activities that affect the electric industry. Staff receives emails and updates that track legislative issues facing not only the electric industry nationwide, but also local initiatives that may have wider reaching consequences. FMEA provides the avenue to communicate with legislators as well as the Public Service Commission. Through diligent efforts and coordination by FMEA staff, member cities are afforded the opportunity to testify before the PSC on items that can directly affect customers.

- Member Services: This committee meets once a year to discuss activities of the FMEA to ensure that services provided meet the needs of member cities. It is through this participation that members can request information-gathering services, which the FMEA staff oversees – writing, distributing, and compiling survey information. In addition to programmed services, FMEA staff is readily available to assist member cities. Lake Worth has benefited in the last year with communication training, PSC reporting, franchise agreement direction, and energy conservation information.

- Safety and Training: This committee meets quarterly and consists of member city representatives charged with safely operating their utility. This group coordinates training classes and the annual Lineman's Rodeo.

- Engineering and Operations: This committee meets once per year and includes representatives from member cities whose job responsibilities include transmission, distribution, generation, and fuels.

- Customer Connections Committee: Meets three times per year and offers participants the opportunity to interface with other utilities concerning customer service, key accounts, energy conservation, demand side management, and public relations.

- Mutual Aid: FMEA provides staff members that are available 24 hours per day, 7 days per week pre- and post-disaster events. They provide assistance scheduling and mobilizing work crews, equipment, and supplies. In addition, they are the City's liaison with the State Emergency Operation Center, the Office of the Governor, and State legislators.

This item was reviewed by the Electric Utility Advisory Board members on November 5, 2014.

MOTION:
I move to approve/not approve the Florida Municipal Electric Association annual membership dues for Fiscal Year 2014-2015 in the amount of $33,345.

ATTACHMENT(S):
1. Fiscal Impact Analysis
2. FMEA Membership Invoice

FISCAL IMPACT ANALYSIS

A. Five Year Summary of Fiscal Impact:

Fiscal Years	2015	2016	2017	2018	2019
Capital Expenditures	0	0	0	0	0
Operating Expenditures	33,345	0	0	0	0
External Revenues	0	0	0	0	0
Program Income	0	0	0	0	0
In-kind Match	0	0	0	0	0
Net Fiscal Impact	33,345	0	0	0	0
No. of Addn'l Full-Time Employee Positions	0	0	0	0	0

B. Recommended Sources of Funds/Summary of Fiscal Impact:

Account Number	Account Description	Project #	FY 2015 Budget	Current Balance	Agenda Item Expenditures	Remaining Balance
401-6010-531.54-00	Book, Pubs, Subsc & Membership	N/A	$47,000	$47,000	-$33,345	$13,655

C. Department Fiscal Review: Clay Lindstrom

FMEA
FLORIDA MUNICIPAL ELECTRIC ASSOCIATION

September 1, 2014

Mr. Clayton Lindstrom
Director Electric Utilities
City of Lake Worth Utilities
1900 2nd Ave N
Lake Worth, FL 33461-4204

INVOICE

FMEA Dues October 2014 through September 2015

Amount Due: $33,345.00

Please remit to: Florida Municipal Electric Association, Inc.
PO Box 10114
Tallahassee, FL 32302-2114

RECEIVED
SEP 8 2014
Utilities Administration

417 E. College Ave. (32301) • PO Box 10114 • Tallahassee, Florida 32302 • (850) 224-3314 • Fax: (850) 224-2831 • www.publicpower.com

• Alachua • Bartow • Blountstown • Bushnell • Chattahoochee • Clewiston • Fort Meade • Fort Pierce • Gainesville • Green Cove Springs •
• Havana • Homestead • Jacksonville • Jacksonville Beach • Key West • Kissimmee • Lakeland • Lake Worth • Leesburg •
• Moore Haven • Mount Dora • Newberry • New Smyrna Beach • Ocala • Orlando • Quincy • Reedy Creek •
• St. Cloud • Starke • Tallahassee • Vero Beach • Wauchula • Williston • Winter Park •

Our Mission ...

FMEA supports and promotes Florida's public power communities through information, advocacy and service. The organization accomplishes this goal by:

- *Representing and advocating municipal electric utility interests to legislative and regulatory bodies.*
- *Facilitating information exchange, innovation and productivity improvements increasing members' efficiency and effectiveness through publications, training, conferences and networking.*
- *Promoting a positive image and enhancing public confidence in municipal electric utilities.*

Promoting Public Power ...

The Florida Municipal Electric Association (FMEA) is the trade association for Florida's family of 34 public power communities located across the state, from cities as varied as Jacksonville, Orlando, Lakeland, Tallahassee and Gainesville to smaller towns such as Havana, Clewiston and Bushnell.

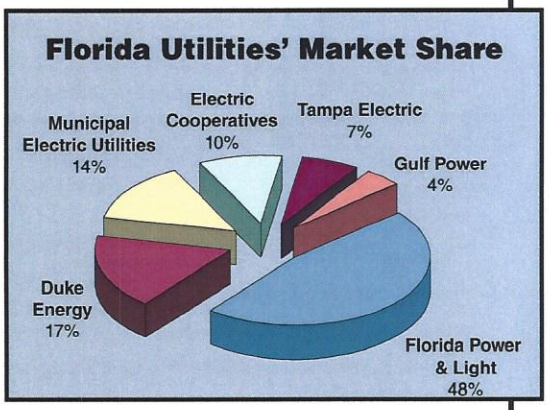

Together, these community-owned utilities serve 3 million Floridians — collectively, they are the third largest source of power in the state. As community-owned and locally managed organizations, these utilities are focused on serving local needs and interests with profits reinvested back into the community for services such as police and fire protection, rather than sent to distant stockholders.

FMEA represents the unified interests of this important community through three major functions: 1) government relations; 2) communications, news and information; and 3) education and training. Through these services, FMEA focuses on public power's outstanding service, superior reliability, and significant local investment.

Government Relations: FMEA has a broad legislative team actively representing member cities' interests on a wide variety of state and federal issues including environmental protection, electric competition, power regulation and more. FMEA also works closely with the American Public Power Association (APPA) on federal legislative and regulatory issues.

Communications, News and Information: FMEA is a huge information clearinghouse, providing members access to a comprehensive news resource, industry statistics, legislative updates, and safety and technical information. The organization keeps members informed through Relay magazine (www.RelayMagazine.org) and a weekly news e-mail, FMEA Headline News. Relay is Florida's only electric utility magazine with a statewide readership that includes municipal utilities, electric cooperatives, private utilities, legislators, regulators, utility suppliers and consultants. A wealth of information is also available on FMEA's Web site (www.publicpower.com), which is updated daily with energy news. Of particular interest, the site includes a monthly bill comparison for Florida's municipal and private electric utilities and annual statistical information on Florida's municipal, investor-owned and cooperative utilities.

Education and Training: FMEA offers educational programs aimed at improving member safety, business practices and operational procedures. These include frequent workshops, training programs and online interactive training courses. Examples include a safety and training workshop; customer service, energy auditing, GIS, tax and legal seminars; a communicators' forum; and lineworker training activities.

1. Alachua
2. Bartow
3. Blountstown
4. Bushnell
5. Chattahoochee
6. Clewiston
7. Fort Meade
8. Fort Pierce
9. Gainesville
10. Green Cove Springs
11. Havana
12. Homestead
13. Jacksonville Beach
14. Jacksonville
15. Key West
16. Kissimmee
17. Lake Worth
18. Lakeland
19. Leesburg
20. Moore Haven
21. Mount Dora
22. New Smyrna Beach
23. Newberry
24. Ocala
25. Orlando
26. Quincy
27. Reedy Creek
28. St. Cloud
29. Starke
30. Tallahassee
31. Vero Beach
32. Wauchula
33. Williston
34. Winter Park

Supporting and strengthening Florida's public power communities and the 3 million Floridians they serve.

Getting Plugged In ...

FMEA is proud of the level of involvement and support provided by its member utilities. There are many opportunities for involvement, including several standing committees that drive FMEA's policies and programs.

Board of Directors: Meets three times per year and is charged with overseeing FMEA policy and direction.

Legislative & Regulatory: Meets on an as-needed basis, generally two or three times a year, and oversees the legislative and regulatory activities of FMEA.

Safety and Training: Meets quarterly and consists of representatives charged with safely operating their local electric utilities, including safety coordinators and directors.

Customer Connections: Meets three times per year and consists of representatives working directly with customers (customer service, key accounts, energy conservation,demand-side management, and public relations).

Engineering & Operations: Meets once a year and includes representatives working in operations, primarily transmission and distribution.

Renewables & Efficiency: Shares information on effective utility renewable energy and energy efficiency programs, as well as discusses public policy issues.

Mutual Aid: Consists of representatives available 24/7 to: 1) discuss needs of the electric utility after a storm or other emergencies, and 2) provide assistance–work crews, equipment and supplies–to other cities/utilities after an emergency.

Powerful Events ...

FMEA-FMPA Annual Conference: This three-day event features top industry speakers, informative workshops and discussion groups, and much more. The conference is designed for upper-level utility managers and directors; city managers and directors; and local policy makers from Florida's municipal utilities, investor-owned utilities and electric cooperatives. **Contact: Amy Zubaly (ext. 7)**

Energy Connections Conference: FMEA hosts a two-day event delivering cutting edge information to members about improving their daily operations. The event is held in Orlando, featuring in-depth and comprehensive workshops on transmission and distribution, customer connections, safety, and lineworker training. There is also a trade show open to vendors showcasing a variety of new products, services and technologies.
Contact: Cheryl Anderson (850) 251-5465

Florida Lineman Competition: This annual day-long event pits utility lineman teams against one another in competitions demonstrating their skills, knowledge and teamwork. The Florida Lineman Competition emphasizes working safely in all aspects of utility operations and promotes positive safety training development.
Contact: Cheryl Anderson (850) 251-5465

Legislative Rally: FMEA members meet in Tallahassee during Florida's legislative session to discuss legislative proposals affecting public power communities. Working together, this grassroots effort is an effective tool for communicating consumer issues to state legislators.
Contact: Amy Zubaly (ext. 7)

Making the Connection ...

FMEA is a trade association. Our success depends on the regular communication with, and feedback from, our members. If you have any comments or questions about the organization, please let us know!

Staff:

Executive Director — Barry Moline (ext. 1)
Office Manager — Brenda Thompson (ext. 3)
Communications Specialist — Carly Mertz (ext. 4)
Director of Communications & Marketing — Garnie Holmes, Jr. (ext. 5)
Information Management Coordinator — Denise Hill (ext. 6)
Director of Public Affairs — Amy Zubaly (ext. 7)
Director of Training & Member Services — Cheryl Anderson (850-251-5465)

FMEA Officers:

President — Bud Para, Jacksonville
President-Elect — Mike New, Newberry
Vice President — Vacant
Secretary-Treasurer — Clay Lindstrom, Lake Worth
Immediate Past President — Barbara Quiñones, Homestead
Past President — Arthur J. Lacerte, Jr., Kissimmee
Past President — Howard McKinnon, Havana

Florida Municipal Electric Association Inc. • P.O. Box 10114 • Tallahassee, FL 32302 • Phone: (850) 224-3314 • Fax: (850) 224-2831
www.publicpower.com

Revised 9/2014

CITY OF LAKE WORTH

7 North Dixie Highway · Lake Worth, Florida 33460 · Phone: 561-586-1600· Fax: 561-586-1750

AGENDA DATE: December 2, 2014, Regular Meeting **DEPARTMENT:** Electric Utility

---

EXECUTIVE BRIEF

TITLE:
Agreement with MR Valuation Consulting, LLC for Fair Market Value Appraisal of Electric Utility System

SUMMARY:
This Agreement will authorize a fair market value appraisal and economic and financial value of the City's electric utility to be performed.

BACKGROUND and JUSTIFICATION:
The Electric Utility Advisory Board was directed to evaluate three alternatives concerning the Lake Worth Electric Utility: (1) sell the system, (2) build new generation facilities to serve the customers directly, and (3) consider a long term purchase power agreement with another generating source. In order to consider a sale of the utility, it was determined that a Fair Market Value Appraisal and an Economic and Financial Value of the Electric Utility to the City of Lake Worth needed to be determined. Request for Letters of Interest and Professional Qualifications (RFQ # 13-14-402) was issued June 20, 2014. Four proposals were received. Evaluation of the written submissions were done and the top 3 firms Cohn Reznick, MR Valuation Consulting and Willdan were selected to do Oral presentations. Evaluations of proposals were completed September 3, 2014. MR Valuation Consulting of Monmouth, New Jersey was selected as the preferred qualified consultant.

The Fair Market Value Appraisal seeks to determine a price for the Lake Worth Electric Utility System serving approximately 26,000 customers in the Southeast Florida market. The Fair Market Value is defined as a professional opinion expressed in terms of money, at which the property would change hands between a willing buyer and a willing seller, neither being under any compulsion to buy or sell and both having reasonable knowledge of relevant facts. It was determined that MR Valuation Consulting had the best overall professional qualifications to perform the services requested in the RFQ.

This appraisal is one component of the 'sale option' and should be performed in conjunction with the Economic and Financial Value of the Electric Utility to the City of Lake Worth. The MR Valuation price for this service is $85,000.

This item was reviewed and recommended by the Electric Utility Advisory Board on November 5, 2014.

MOTION:
I move to approve / not approve an agreement with MR Valuation Consulting, LLC in the amount of $85,000 to perform consulting services for the Fair Market Value Appraisal of the Lake Worth Electric Utility.

ATTACHMENT(S):
1) Fiscal Impact Analysis
2) MR Valuation Agreement
3) RFQ-13-402 Evaluations Fair Market Value
4) RFQ-13-402 Fair Market Value Appraisal

FISCAL IMPACT ANALYSIS

A. Five Year Summary of Fiscal Impact:

Fiscal Years	2015	2016	2017	2018	2019
Capital Expenditures	0	0	0	0	0
Operating Expenditures	85,000	0	0	0	0
External Revenues	0	0	0	0	0
Program Income	0	0	0	0	0
In-kind Match	0	0	0	0	0
Net Fiscal Impact	85,000	0	0	0	0
No. of Addn'l Full-Time Employee Positions	0	0	0	0	0

B. Recommended Sources of Funds/Summary of Fiscal Impact:

Account Number	Account Description	FY2015 Budget	Curr Bal After Economic Study	Agenda Expense	Remaining Balance
401-6020-531-3190	Other	209,000	138,675	-85,000	53,675

C. Department Fiscal Review: _CL_

PROFESSIONAL SERVICES AGREEMENT
(FAIR MARKET VALUE APPRAISAL OF ELECTRIC UTILITY SYSTEM)

THIS PROFESSIONAL SERVICES AGREEMENT ("Agreement") is entered into by and between the **City of Lake Worth**, a Florida municipal corporation ("City") and **MR Valuation Consulting, LLC,** a corporation authorized to do business in the State of Florida ("Consultant").

RECITALS

WHEREAS, the City desires to obtain a fair market value appraisal of its Electric Utility System (the "Project"); and,

WHEREAS, the Consultant responded to the City's Request for Qualifications (#13-14-402) for a fair market value appraisal of the City's Electric Utility System (the "RFQ"); and,

WHEREAS, the City selected the Consultant's as the most qualified for the Project under the RFQ; and,

WHEREAS, the Consultant is willing to provide appropriately licensed, qualified personnel to accomplish the Project; and,

WHEREAS, the purpose of this Agreement is to set forth certain terms and conditions for the accomplishment of the Project by the Consultant.

NOW, THEREFORE, in consideration of the premises and mutual covenants herein contained, the sufficiency of which is hereby acknowledged by the parties, the City and the Consultant agree as follows:

SECTION 1: INCORPORATION OF RECITALS. The foregoing Recitals are incorporated into this Agreement as true and correct statements.

SECTION 2: CONSULTANT'S SERVICES. As more specifically set forth in the RFQ and the Consultant's proposal submitted in response to the RFQ, which are incorporated herein by reference, the Consultant shall provide the City with all goods and services necessary to accomplish and complete the Project.

SECTION 3: INDEPENDENT CONTRACTOR RELATIONSHIP. No relationship of employer or employee is created by this Agreement, it being understood that Consultant will act hereunder as an independent contractor and none of the Consultant's, officers, directors, employees, independent contractors, representatives or agents performing services for Consultant pursuant to this Agreement shall have any claim under this Agreement or otherwise against the City for compensation of any kind under this Agreement. The relationship between the City and Consultant is that of independent contractors, and neither shall be considered a joint venturer, partner, employee, agent, representative or other relationship of the other for any purpose expressly or by implication.

SECTION 4: TERM AND TERMINATION.

a. Term. The term of this Agreement is for a period of one (1) year from the Effective Date (the "Term") unless earlier terminated as stated herein. The "Effective Date" shall be the date the City sends the Consultant a notice to proceed. The parties may agree in writing to extend the Term of this Agreement.

b. Termination without cause. Either party may terminate this Agreement at any time with or without cause by giving not less than ten (10) days prior written notice of termination. In the event of such termination, the Consultant shall submit a final invoice to the City for the services performed to the date of termination and the compensation due the Consultant shall be pro-rated to the amount of services performed to the date of termination. The City shall not be liable for disengagement, wind-down, lost profits or other costs incurred due to termination of this Agreement prior to the Consultant completing the Project.

c. Effect of Termination. Termination of this Agreement shall not affect any rights, obligations, and liabilities of the parties arising out of transactions which occurred prior to termination. Notwithstanding the foregoing, the parties acknowledge and agree that the City is a municipal corporation and political subdivision of the state of Florida, and as such, this Agreement (and all Exhibits hereto) are subject to budgeting and appropriation by the City of funds sufficient to pay the costs associated herewith in any fiscal year of the City. Notwithstanding anything in this Agreement to the contrary, in the event that no funds are appropriated or budgeted by the City's governing board in any fiscal year to pay the costs associated with the City's obligations under this Agreement, or in the event the funds budgeted or appropriated are, or are estimated by the City to be, insufficient to pay the costs associated with the City's obligations hereunder in any fiscal period, then the City will notify Consultant of such occurrence and either the City or Consultant may terminate this Agreement by notifying the other in writing, which notice shall specify a date of termination no earlier than twenty-four (24) hours after giving of such notice. Termination in accordance with the preceding sentence shall be without penalty or expense to the City of any kind whatsoever; however, City shall pay Consultant for all services performed under this Agreement through the date of termination.

SECTION 5: COMPENSATION.

a. Payments. The City agrees to compensate the Consultant **a maximum not-to-exceed price of Eighty-Five Thousand Dollars ($85,000.00) for the accomplishing and completing the Project**. The City shall not compensate or reimburse the Consultant for any additional costs incurred as a direct or indirect result of the Consultant accomplishing the Project for the City.

b. Invoices. The Consultant shall render invoices as requested by the City (or at least monthly) for services that have been rendered in conformity with this Agreement. The invoices shall specify the services performed and the time spent on such services. If the City is paying for any reimbursable costs within the maximum not-to-exceed price, the Consultant shall include receipts for all such reimbursable costs. Invoices will normally be paid within thirty (30) days following the City's receipt of the Consultant's invoice.

SECTION 6: INDEMNIFICATION. The Consultant, its officers, employees and agents shall indemnify and hold harmless the City, including its officers, employees and agents from liabilities, damages, losses, and costs, including but not limited to, reasonable attorney's fees (at the trial and appellate levels), to the extent caused by the negligence of the Consultant, its officers, directors, employees, representatives and agents employed or utilized by the Consultant in the performance of the services under this Agreement. The City agrees to be responsible for its own negligence. Nothing contained in this Agreement shall

create a contractual relationship with or a cause of action in favor of a third party against either the City or the Consultant, nor shall this Agreement be construed as a waiver of sovereign immunity for the City beyond the waiver provided in section 768.28, Florida Statutes.

SECTION 7: COMPLIANCE AND DISQUALIFICATION. Each of the parties agrees to perform its responsibilities under this Agreement in conformance with all laws, regulations and administrative instructions that relate to the parties' performance of this Agreement, including, without limitation, the applicable licensure requirements and the Florida Building Code.

SECTION 8: PERSONNEL. The Consultant represents that it has, or will secure at its own expense, all necessary personnel required to perform the services under this Agreement. Such personnel shall not be employees of or have any contractual relationship with the City. All of the services required hereunder shall be performed by the Consultant or under its supervision, and all personnel engaged in performing the services shall be fully qualified and authorized or permitted under federal, state and local law to perform such services.

SECTION 9: SUB-CONSULTANTS. The City reserves the right to accept the use of a sub-consultant or to reject the selection of a particular sub-consultant and approve all qualifications of any sub-consultant in order to make a determination as to the capability of the sub-consultant to perform properly under this Agreement. All sub-consultants providing professional services to the Consultant under this Agreement will also be required to provide their own insurance coverage identical to those contained in this Agreement. In the event that a sub-consultant does not have insurance or does not meet the insurance limits as stated in this Agreement, the Consultant shall indemnify and hold harmless the City for any claim in excess of the sub-consultant's insurance coverage, arising out of the negligent acts, errors or omissions of the sub-consultant. All costs of a sub-consultant shall be a direct pass-through cost to the City.

SECTION 10: FEDERAL AND STATE TAX. The City is exempt from payment of Florida State Sales and Use Tax. The Consultant is not authorized to use the City's Tax Exemption Number.

SECTION 11: **INSURANCE. Prior to commencing any services, the Consultant shall provide proof of insurance coverage as required in the RFQ.** All such insurance policies may not be modified or terminated without the express written authorization of the City. The commercial general liability will name the City as an additional insured and proof of all insurance coverage shall be furnished to the City by way of an endorsement to same or certificate of insurance prior to the provision of services. The certificates shall clearly indicate that the Consultant has obtained insurance of the type, amount, and classification as required for strict compliance with this section. Failure to comply with the foregoing requirements shall not relieve Consultant of its liability and obligations under this Agreement.

SECTION 12: SUCCESSORS AND ASSIGNS. The City and the Consultant each binds itself and its partners, successors, executors, administrators, and assigns to the other party of this Agreement and to the partners, successors, executors, administrators and assigns of such other party, in respect to all covenants of this Agreement. Except as agreed in writing by all parties, this Agreement is not assignable.

SECTION 13: DISPUTE RESOLUTION, LAW, VENUE AND REMEDIES. All claims arising out of this Agreement or its breach shall be submitted first to mediation. The parties shall share the mediator's fee equally. The mediation shall be held in Palm Beach County. Agreements reached in mediation shall be enforceable as settlement agreements in any court having jurisdiction thereof. This Agreement shall be governed by the laws of the State of Florida. Any and all legal action necessary to enforce the Agreement will be held in Palm Beach County. No remedy herein conferred upon any party is intended

to be exclusive of any other remedy, and each and every such remedy shall be cumulative and shall be in addition to every other remedy given hereunder or now or hereafter existing at law or in equity or by statute or otherwise. No single or partial exercise by any party of any right, power, or remedy hereunder shall preclude any other or further exercise thereof.

SECTION 14: WAIVER OF JURY TRIAL. TO ENCOURAGE PROMPT AND EQUITABLE RESOLUTION OF ANY LITIGATION, EACH PARTY HEREBY WAIVES ITS RIGHTS TO A TRIAL BY JURY IN ANY LITIGATION RELATED TO THIS AGREEMENT.

SECTION 15: ACCESS AND AUDITS. The Consultant shall maintain adequate records to justify all payments made by the City under this Agreement for at least three (3) years after completion of this Agreement and longer if required by applicable federal or state law. The City shall have access to such books, records, and documents as required in this section for the purpose of inspection or audit during normal business hours, at the Consultant's place of business. In no circumstances will Consultant be required to disclose any confidential or proprietary information regarding its products and service costs.

SECTION 16: NONDISCRIMINATION. The Consultant warrants and represents that all of its employees are treated equally during employment without regard to race, color, religion, disability, sex, age, national origin, ancestry, marital status, or sexual orientation.

SECTION 17: AUTHORITY TO PRACTICE. The Consultant hereby represents and warrants that it has and will continue to maintain all licenses and approvals required to conduct its business and provide the services required under this Agreement, and that it will at all times conduct its business and provide the services under this Agreement in a reputable manner. Proof of such licenses and approvals shall be submitted to the City upon request.

SECTION 18: SEVERABILITY. If any term or provision of this Agreement, or the application thereof to any person or circumstances shall, to any extent, be held invalid or unenforceable, to remainder of this Agreement, or the application of such terms or provision, to persons or circumstances other than those as to which it is held invalid or unenforceable, shall not be affected, and every other term and provision of this Agreement shall be deemed valid and enforceable to the extent permitted by law.

SECTION 19: PUBLIC ENTITY CRIMES. Consultant acknowledges and agrees that a person or affiliate who has been placed on the convicted vendor list following a conviction for a public entity crime may not submit a bid, proposal, or reply on a contract to provide any goods or services to a public entity; may not submit a bid, proposal, or reply on a contract with a public entity for the construction or repair of a public building or public work; may not submit bids, proposals, or replies on leases of real property to a public entity; may not be awarded or perform work as a contractor, supplier or sub-contractor under a contract with any public entity; and may not transact business with any public entity in excess of the threshold amount provided in Section 287.017, Florida Statues, for CATEGORY TWO for a period of 36 months following the date of being placed on the convicted vendor list. The Consultant will advise the City immediately if it becomes aware of any violation of this statute.

SECTION 20: NOTICE. All notices required in this Agreement shall be sent by hand-delivery, certified mail (RRR), or by nationally recognized overnight courier, and if sent to the CITY shall be sent to:

City of Lake Worth
Attn: City Manager
7 N. Dixie Highway

Lake Worth, FL 33460

and if sent to the Consultant, shall be sent to:

MR Valuation Consulting, LLC
Attn: Mark Rodriguez
5 Professional Circle, Suite 208
Colts Neck, NJ 07722

The foregoing names and addresses may be changed if such change is provided in writing to the other party.

SECTION 21: ENTIRETY OF AGREEMENT. The City and the Consultant agree that this Agreement sets forth the entire agreement between the parties, and that there are no promises or understandings other than those stated herein. None of the provisions, terms and conditions contained in this Agreement may be added to, modified, superseded or otherwise altered, except by written instrument executed by the parties hereto.

SECTION 22: WAIVER. Failure of a party to enforce or exercise any of its right(s) under this Agreement shall not be deemed a waiver of that parties' right to enforce or exercise said right(s) at any time thereafter.

SECTION 23: PREPARATION. This Agreement shall not be construed more strongly against either party regardless of who was more responsible for its preparation.

SECTION 24: MATERIALITY. All provisions of the Agreement shall be deemed material. In the event Consultant fails to comply with any of the provisions contained in this Agreement or exhibits, amendments and addenda attached hereto, said failure shall be deemed a material breach of this Agreement and City may at its option provide notice to the Consultant to terminate for cause.

SECTION 25: LEGAL EFFECT. This Agreement shall not become binding and effective until approved by the City. The Effective Date is the date this Agreement is executed by the City.

SECTION 26: NOTICE OF COMPLAINTS, SUITS AND REGULATORY VIOLATIONS . Each party will promptly notify the other of any complaint, claim, suit or cause of action threatened or commenced against it which arises out of or relates, in any manner, to the performance of this Agreement. Each party agrees to cooperate with the other in any investigation either may conduct, the defense of any claim or suit in which either party is named, and shall do nothing to impair or invalidate any applicable insurance coverage.

SECTION 27: SURVIVABILITY. Any provision of this Agreement which is of a continuing nature or imposes an obligation which extends beyond the term of this Agreement shall survive its expiration or earlier termination.

SECTION 28: COUNTERPARTS. This Agreement may be executed in one or more counterparts, each of which shall be deemed an original, and will become effective and binding upon the parties as of the effective date at such time as all the signatories hereto have signed a counterpart of this Agreement.

SECTION 29: PALM BEACH COUNTY IG. In accordance with Palm Beach County ordinance

number 2011-009, the CONSULTANT acknowledges that this Agreement may be subject to investigation and/or audit by the Palm Beach County Inspector General. The CONSULTANT has reviewed Palm Beach County ordinance number 2011-009 and is aware of its rights and/or obligations under such ordinance.

SECTION 30: AGREEMENT DOCUMENTS AND CONTROLLING PROVISIONS. This Agreement consists of this Agreement, the RFQ and the Consultant's proposal in response to the RFQ. The parties agree to be bound by all the terms and conditions set forth in the aforementioned documents. To the extent that there exists a conflict between this Agreement and the remaining documents, the terms, conditions, covenants, and/or provisions of this Agreement shall prevail with the RFP next taking precedence. Wherever possible, the provisions of such documents shall be construed in such a manner as to avoid conflicts between provisions of the various documents.

SECTION 32: REPRESENTATIONS and BINDING AUTHORITY. By signing this Agreement, the below representative of the Consultant hereby represents to the City that he or she has the authority and full legal power to execute this Agreement and any and all documents necessary to effectuate and implement the terms of this Agreement on behalf of the Consultant for whom he or she is signing and to bind and obligate such party with respect to all provisions contained in this Agreement.

SECTION 33: PUBLIC RECORDS. Effective July 1, 2013, pursuant to section 119.0701, Florida Statutes, the Consultant shall comply with Florida's Public Records Act, Chapter 119, Florida Statutes, and specifically agrees to:

(a) Keep and maintain all public records that ordinarily and necessarily would be required by the CITY to keep and maintain in order to perform the services under this Agreement.

(b) Provide the public with access to said public records on the same terms and conditions that the City would provide the records and at a cost that does not exceed the cost provided in Chapter 119, Florida Statutes, or as otherwise provided by law.

(c) Ensure that said public records that are exempt or confidential and exempt from public records disclosure requirements are not disclosed except as authorized by law.

(d) Meet all requirements for retaining said public records and transfer, at no cost, to the City all said public records in possession of the Consultant upon termination of the Agreement and destroy any duplicate public records that are exempt or confidential and exempt from Chapter 119, Florida Statutes, disclosure requirements. All records stored electronically must be provided to the City in a format that is compatible with the information technology systems of the City.

SECTION 34: OWNERSHIP OF DOCUMENTS. The reports, appraisals, drawings, mock-ups, renderings, calculations, supporting documents, or other work products which are listed as deliverables by the Consultant to the City shall become the property of the City upon delivery. The Consultant may keep copies or samples thereof and shall have the right to use such drawings, mock-ups, renderings, calculations, supporting documents, or other documents. The City accepts sole responsibility for the reuse of any such documents in a manner other than as initially intended, or for any use of incomplete documents unless prior written approval is obtained from the Consultant.

SECTION 35: TIME SCHEDULE. The City expects the Project to be substantively and substantially complete by the Consultant within 95 calendar days from the date of the executed Agreement. (Reasonable allowances will be made for final editorial changes and non-substantive revisions in preparation for the final presentation to the City Commission.)

REMAINDER OF THIS PAGE INTENTIONALLY LEFT BLANK
SIGNATURE PAGE FOLLOWS

IN WITNESS WHEREOF, the parties hereto have made and executed this Professional Services Agreement (FAIR MARKET VALUE APPRAISAL OF ELECTRIC UTILITY SYSTEM) as of the day and year set forth below by the City.

CITY OF LAKE WORTH, FLORIDA

Date: _____

By: _____
Pam Triolo, Mayor

ATTEST:

_____
Pamela J. Lopez, City Clerk

Approved as to form and
legal sufficiency:

_____ FOR
Glen J. Torcivia, City Attorney

MR Valuation Consulting, LLC

By: _____

[Corporate Seal]

Print Name: Mark Rodriguez
Print Title: Managing Partner

STATE OF New Jersey)
COUNTY OF Monmouth)

The foregoing instrument was acknowledged before me this 03 day of November, 2014, by Mark Rodriguez, as Managing Partner of MR Valuation Consulting, LLC, and who is personally known to me or who has produced the following NJ Drivers License as identification.

Notary Public

_____

Joanne E Rodriguez
Notary Public
State of New Jersey
My Commission Expires 08/29/2016

Where the Tropics Begin

PROCUREMENT OFFICE
7 North Dixie Highway
Lake Worth, FL 33460
Tel: 561-586-1674

LIST OF PROPOSERS
RFQ 13-14-402

FAIR MARKET VALUE OF ELECTRIC SYSTEM TO THE CITY OF LAKE WORTH

The following firms have submitted to the Procurement Office on or before 12:00 p.m. on July14, 2014. RFQs were opened by Sarah Vinci.

Total number of Proposers: 4

CohnReznick LLP
7501 Wisconsin Avenue, Suite 400E
Bethesda, MD 20814
Contact: Donald Nimey
Title: Principal
E-mail: don.nimey@cohnreznick.com
Phone: 301-280-1846

Willdan Financial Services
200 South Orange Street, Suite 1550
Orlando, FL 32801
Contact: Jeffrey McGarvey
Title: Managing Principal
Email: JMcGarvey@Willdan.com
Phone: 407-872-2467

MR Valuation Consulting, LLC
5 Professional Circle, Suite 208
Colts Neck, New Jersey 07722
Contact: Mark Rodriguea
Title: Managing Partner
E-mail: mrodriguez@mrvaluation.com
Phone: 732-780-6000

R.E. Pender Inc
PO Box 1567
Goldenrod, FL 32733
Contact: Robert E Pender
Title: President
E-mail: bob@repender.com
Phone: 407-644-9795

City of Lake Worth
Evaluation Matrix

PROCUREMENT OFFICE
7 North Dixie Highway
Lake Worth, FL 33460

RFQ 13-14-402

Fair Market Value Appraisal of Electric Utility System

Evaluation Meeting: Monday, July 28, 2014

TOTAL AVERAGE WEIGHTED SCORE

			RANKED:	3	2	4	1
	Evaluation Criteria Score Sheet:		**Weight**	**Cohn Reznick**	**MR Valuation Consulting LLC**	**R. E. Pender Inc**	**Willdan**
1	Ability, capacity and skill of personnel who will be assigned to perform the contract and provide the work products and services required		55	42.00	44.60	35.00	51.40
2	Relevant experience of proposer's firm and personnel to be assigned to the project in Florida and in the Palm Beach County area		20	14.00	14.80	14.00	19.60
3	Time and Task Budget and Maximum Not To Exceed Price.		20	19.00	16.00	19.00	11.60
4	Variances: As noted in the body of this RFQ, variances to certain provisions of the RFQ, including variances to the Scope of Services, are unacceptable, such that a variance proposed to such provisions will result in disqualification of the Proposal. Proposals having zero variances will get full points; Proposals having proposed variances will be evaluated on the basis of whether they would, in the Evaluation Committee's estimation, diminish the value of the proposal to the City		5	3.20	4.00	4.00	4.80
		TOTAL AVERAGE POSSIBLE POINTS	100	**78**	**79**	**72**	**87**
			Total Points Received:	391	397	360	437

	Cohn Reznick	**MR Valuation Consulting LLC**	**R. E. Pender Inc**	**Willdan**
Maximum Not to Exceed Price	$ 53,000	$ 85,000	$ 54,200	$ 224,000
Exhibit A	yes	yes	yes	yes
Exhibit B	yes	yes	yes	yes
Exhibit C	yes	yes	yes	yes
Exhibit D	yes	yes	yes	yes
Exhibit E	yes	yes	yes	yes

City of Lake Worth

Evaluation Matrix

RFQ 13-14-402

Fair Market Value Appraisal of Electric Utility System

Evaluation Meeting: TBD

			RANKED:	
Evaluation Criteria Score Sheet:		**Weight**	**Cohn Reznick**	
1	Ability, capacity and skill of personnel who will be assigned to perform the contract and provide the work products and services required	55	0.00	56
2	Relevant experience of proposer's firm and personnel to be assigned to the project in Florida and in the Palm Beach County area	20	0.00	18
3	Time and Task Budget and Maximum Not To Exceed Price.	20	0.00	15
4	Variances: As noted in the body of this RFQ, variances to certain provisions of the RFQ, including variances to the Scope of Services, are unacceptable, such that a variance proposed to such provisions will result in disqualification of the Proposal. Proposals having zero variances will get full points; Proposals having proposed variances will be evaluated on the basis of whether they would, in the Evaluation Committee's estimation, diminish the value of the proposal to the City	5	0.00	5
	TOTAL AVERAGE POSSIBLE POINTS	100	**0**	
		Total Points Received:	85	

	Cohn Reznick

City of Lake Worth

Evaluation Matrix

RFQ 13-14-402

Fair Market Value Appraisal of Electric Utility System **TOTAL AVERAGE**

Evaluation Meeting: TBD

RANKED: [redacted]

	Evaluation Criteria Score Sheet:	**Weight**	**MR Valuation Consulting LLC**
1	Ability, capacity and skill of personnel who will be assigned to perform the contract and provide the work products and services required	55	0.00 45
2	Relevant experience of proposer's firm and personnel to be assigned to the project in Florida and in the Palm Beach County area	20	0.00 15
3	Time and Task Budget and Maximum Not To Exceed Price.	20	0.00 15
4	Variances: As noted in the body of this RFQ, variances to certain provisions of the RFQ, including variances to the Scope of Services, are unacceptable, such that a variance proposed to such provisions will result in disqualification of the Proposal. Proposals having zero variances will get full points; Proposals having proposed variances will be evaluated on the basis of whether they would, in the Evaluation Committee's estimation, diminish the value of the proposal to the City	5	0.00 ~~15~~ 5
	TOTAL AVERAGE POSSIBLE POINTS	100	**0** ~~82~~
	Total Points Received:		0 80

	MR Valuation Consulting LLC

7/28/14

City of Lake Worth

Evaluation Matrix

PROCU
7 N
Lal

RFQ 13-14-402

Fair Market Value Appraisal of Electric Utility System

Evaluation Meeting: TBD

WEIGHTED SCOR

RANKED:

	Evaluation Criteria Score Sheet:	Weight	R. E. Pender Inc
1	Ability, capacity and skill of personnel who will be assigned to perform the contract and provide the work products and services required	55	0.00 45
2	Relevant experience of proposer's firm and personnel to be assigned to the project in Florida and in the Palm Beach County area	20	0.00 15
3	Time and Task Budget and Maximum Not To Exceed Price.	20	0.00 20
4	Variances: As noted in the body of this RFQ, variances to certain provisions of the RFQ, including variances to the Scope of Services, are unacceptable, such that a variance proposed to such provisions will result in disqualification of the Proposal. Proposals having zero variances will get full points; Proposals having proposed variances will be evaluated on the basis of whether they would, in the Evaluation Committee's estimation, diminish the value of the proposal to the City	5	0.00 5
	TOTAL AVERAGE POSSIBLE POINTS	100	**0**
	Total Points Received:		85

	R. E. Pender Inc

7/28/14

City of Lake Worth
Evaluation Matrix

✓ $228,000

JREMENT OFFICE
Jorth Dixie Highway
ke Worth, FL 33460

RFQ 13-14-402

Fair Market Value Appraisal of Electric Utility System

Evaluation Meeting: TBD

E

RANKED:

	Evaluation Criteria Score Sheet:	Weight	Willdan
1	Ability, capacity and skill of personnel who will be assigned to perform the contract and provide the work products and services required	55	0.00 50
2	Relevant experience of proposer's firm and personnel to be assigned to the project in Florida and in the Palm Beach County area	20	0.00 20
3	Time and Task Budget and Maximum Not To Exceed Price.	20	0.00 5
4	Variances: As noted in the body of this RFQ, variances to certain provisions of the RFQ, including variances to the Scope of Services, are unacceptable, such that a variance proposed to such provisions will result in disqualification of the Proposal. Proposals having zero variances will get full points; Proposals having proposed variances will be evaluated on the basis of whether they would, in the Evaluation Committee's estimation, diminish the value of the proposal to the City	5	0.00 5 None
	TOTAL AVERAGE POSSIBLE POINTS	100	**0**
	Total Points Received:		80

	Willdan

7/28/14

City of Lake Worth
Evaluation Matrix

RFQ 13-14-402

Fair Market Value Appraisal of Electric Utility System

Evaluation Meeting: TBD

			RANKED:	
Evaluation Criteria Score Sheet:		**Weight**	**Cohn Reznick**	
1	Ability, capacity and skill of personnel who will be assigned to perform the contract and provide the work products and services required	55	0.00 45	
2	Relevant experience of proposer's firm and personnel to be assigned to the project in Florida and in the Palm Beach County area	20	0.00 15	
3	Time and Task Budget and Maximum Not To Exceed Price.	20	0.00 20	Lowest #
4	Variances: As noted in the body of this RFQ, variances to certain provisions of the RFQ, including variances to the Scope of Services, are unacceptable, such that a variance proposed to such provisions will result in disqualification of the Proposal. Proposals having zero variances will get full points; Proposals having proposed variances will be evaluated on the basis of whether they would, in the Evaluation Committee's estimation, diminish the value of the proposal to the City	5	0.00 3	
	TOTAL AVERAGE POSSIBLE POINTS	100	**0** 83	
		Total Points Received:	0	

83	**Cohn Reznick**

7/28/14

City of Lake Worth
Evaluation Matrix

RFQ 13-14-402

Fair Market Value Appraisal of Electric Utility System **TOTAL AVERAGE**

Evaluation Meeting: TBD

RANKED:

	Evaluation Criteria Score Sheet:	**Weight**	**MR Valuation Consulting LLC**
1	Ability, capacity and skill of personnel who will be assigned to perform the contract and provide the work products and services required	55	0.00 45
2	Relevant experience of proposer's firm and personnel to be assigned to the project in Florida and in the Palm Beach County area	20	0.00 15
3	Time and Task Budget and Maximum Not To Exceed Price.	20	0.00 15
4	Variances: As noted in the body of this RFQ, variances to certain provisions of the RFQ, including variances to the Scope of Services, are unacceptable, such that a variance proposed to such provisions will result in disqualification of the Proposal. Proposals having zero variances will get full points; Proposals having proposed variances will be evaluated on the basis of whether they would, in the Evaluation Committee's estimation, diminish the value of the proposal to the City	5	0.00 2
	TOTAL AVERAGE POSSIBLE POINTS	100	**0** 77
		Total Points Received:	0

77	**MR Valuation Consulting LLC**

7/28/14

City of Lake Worth

Evaluation Matrix

PROCU
7 N
Lal

RFQ 13-14-402

Fair Market Value Appraisal of Electric Utility System

WEIGHTED SCOR

Evaluation Meeting: TBD

RANKED: [redacted]

	Evaluation Criteria Score Sheet:	**Weight**	**R. E. Pender Inc**
1	Ability, capacity and skill of personnel who will be assigned to perform the contract and provide the work products and services required	55	0.00 45
2	Relevant experience of proposer's firm and personnel to be assigned to the project in Florida and in the Palm Beach County area	20	0.00 15
3	Time and Task Budget and Maximum Not To Exceed Price.	20	0.00 15
4	Variances: As noted in the body of this RFQ, variances to certain provisions of the RFQ, including variances to the Scope of Services, are unacceptable, such that a variance proposed to such provisions will result in disqualification of the Proposal. Proposals having zero variances will get full points; Proposals having proposed variances will be evaluated on the basis of whether they would, in the Evaluation Committee's estimation, diminish the value of the proposal to the City	5	0.00 2
	TOTAL AVERAGE POSSIBLE POINTS	100	**0** 77
		Total Points Received:	0

77	**R. E. Pender Inc**

7/28/14

City of Lake Worth

Evaluation Matrix

JREMENT OFFICE
Jorth Dixie Highway
ke Worth, FL 33460

RFQ 13-14-402

Fair Market Value Appraisal of Electric Utility System E

Evaluation Meeting: TBD

RANKED:

	Evaluation Criteria Score Sheet:	**Weight**	**Willdan**
1	Ability, capacity and skill of personnel who will be assigned to perform the contract and provide the work products and services required	55	0.00 50
2	Relevant experience of proposer's firm and personnel to be assigned to the project in Florida and in the Palm Beach County area	20	0.00 20
3	Time and Task Budget and Maximum Not To Exceed Price.	20	0.00 18
4	Variances: As noted in the body of this RFQ, variances to certain provisions of the RFQ, including variances to the Scope of Services, are unacceptable, such that a variance proposed to such provisions will result in disqualification of the Proposal. Proposals having zero variances will get full points; Proposals having proposed variances will be evaluated on the basis of whether they would, in the Evaluation Committee's estimation, diminish the value of the proposal to the City	5	0.00 4
	TOTAL AVERAGE POSSIBLE POINTS	100	**0** 92
		Total Points Received:	0

92	**Willdan**

7/25/14

City of Lake Worth

Evaluation Matrix

RFQ 13-14-402

Fair Market Value Appraisal of Electric Utility System

Evaluation Meeting: TBD

			RANKED:	
Evaluation Criteria Score Sheet:		**Weight**	**Cohn Reznick**	
1	Ability, capacity and skill of personnel who will be assigned to perform the contract and provide the work products and services required	55	0.00	50
2	Relevant experience of proposer's firm and personnel to be assigned to the project in Florida and in the Palm Beach County area	20	0.00	15
3	Time and Task Budget and Maximum Not To Exceed Price.	20	0.00	20
4	Variances: As noted in the body of this RFQ, variances to certain provisions of the RFQ, including variances to the Scope of Services, are unacceptable, such that a variance proposed to such provisions will result in disqualification of the Proposal. Proposals having zero variances will get full points; Proposals having proposed variances will be evaluated on the basis of whether they would, in the Evaluation Committee's estimation, diminish the value of the proposal to the City	5	0.00	3
	TOTAL AVERAGE POSSIBLE POINTS	100	**0**	88
		Total Points Received:	0	

88	**Cohn Reznick**

7-28-14

City of Lake Worth

Evaluation Matrix

RFQ 13-14-402

Fair Market Value Appraisal of Electric Utility System **TOTAL AVERAGE**

Evaluation Meeting: TBD

			RANKED:	
Evaluation Criteria Score Sheet:		**Weight**	**MR Valuation Consulting LLC**	
1	Ability, capacity and skill of personnel who will be assigned to perform the contract and provide the work products and services required	55	0.00	48
2	Relevant experience of proposer's firm and personnel to be assigned to the project in Florida and in the Palm Beach County area	20	0.00	14
3	Time and Task Budget and Maximum Not To Exceed Price.	20	0.00	20
4	Variances: As noted in the body of this RFQ, variances to certain provisions of the RFQ, including variances to the Scope of Services, are unacceptable, such that a variance proposed to such provisions will result in disqualification of the Proposal. Proposals having zero variances will get full points; Proposals having proposed variances will be evaluated on the basis of whether they would, in the Evaluation Committee's estimation, diminish the value of the proposal to the City	5	0.00	3
	TOTAL AVERAGE POSSIBLE POINTS	100	**0**	
		Total Points Received:	0	85

85	**MR Valuation Consulting LLC**

7-28-14

City of Lake Worth
Evaluation Matrix

PROCU
7 N
Lal

RFQ 13-14-402

Fair Market Value Appraisal of Electric Utility System

Evaluation Meeting: TBD

WEIGHTED SCOR

	Evaluation Criteria Score Sheet:	**Weight**	**R. E. Pender Inc**	
			RANKED:	
1	Ability, capacity and skill of personnel who will be assigned to perform the contract and provide the work products and services required	55	0.00	45
2	Relevant experience of proposer's firm and personnel to be assigned to the project in Florida and in the Palm Beach County area	20	0.00	10
3	Time and Task Budget and Maximum Not To Exceed Price.	20	0.00	20
4	Variances: As noted in the body of this RFQ, variances to certain provisions of the RFQ, including variances to the Scope of Services, are unacceptable, such that a variance proposed to such provisions will result in disqualification of the Proposal. Proposals having zero variances will get full points; Proposals having proposed variances will be evaluated on the basis of whether they would, in the Evaluation Committee's estimation, diminish the value of the proposal to the City	5	0.00	3
	TOTAL AVERAGE POSSIBLE POINTS	100	**0**	78
	Total Points Received:		0	

78	**R. E. Pender Inc**

7-28-14

City of Lake Worth

Evaluation Matrix

JREMENT OFFICE
Jorth Dixie Highway
ke Worth, FL 33460

RFQ 13-14-402

Fair Market Value Appraisal of Electric Utility System

Evaluation Meeting: TBD

E

RANKED:

	Evaluation Criteria Score Sheet:	Weight	Willdan	
1	Ability, capacity and skill of personnel who will be assigned to perform the contract and provide the work products and services required	55	0.00	52
2	Relevant experience of proposer's firm and personnel to be assigned to the project in Florida and in the Palm Beach County area	20	0.00	18
3	Time and Task Budget and Maximum Not To Exceed Price.	20	0.00	20
4	Variances: As noted in the body of this RFQ, variances to certain provisions of the RFQ, including variances to the Scope of Services, are unacceptable, such that a variance proposed to such provisions will result in disqualification of the Proposal. Proposals having zero variances will get full points; Proposals having proposed variances will be evaluated on the basis of whether they would, in the Evaluation Committee's estimation, diminish the value of the proposal to the City	5	0.00	5
	TOTAL AVERAGE POSSIBLE POINTS	100	**0**	
	Total Points Received:		0	95

95	**Willdan**

7-28-14

City of Lake Worth

Evaluation Matrix

RFQ 13-14-402

Fair Market Value Appraisal of Electric Utility System

Evaluation Meeting: TBD

			RANKED:	
Evaluation Criteria Score Sheet:		**Weight**	**Cohn Reznick**	
1	Ability, capacity and skill of personnel who will be assigned to perform the contract and provide the work products and services required	55	0.00	45
2	Relevant experience of proposer's firm and personnel to be assigned to the project in Florida and in the Palm Beach County area	20	0.00	10
3	Time and Task Budget and Maximum Not To Exceed Price.	20	0.00	20
4	Variances: As noted in the body of this RFQ, variances to certain provisions of the RFQ, including variances to the Scope of Services, are unacceptable, such that a variance proposed to such provisions will result in disqualification of the Proposal. Proposals having zero variances will get full points; Proposals having proposed variances will be evaluated on the basis of whether they would, in the Evaluation Committee's estimation, diminish the value of the proposal to the City	5	0.00	0
	TOTAL AVERAGE POSSIBLE POINTS	100	**0**	75
		Total Points Received:	0	

	Cohn Reznick

7-28-14

City of Lake Worth

Evaluation Matrix

RFQ 13-14-402

Fair Market Value Appraisal of Electric Utility System **TOTAL AVERAGE**

Evaluation Meeting: TBD

			RANKED:	
Evaluation Criteria Score Sheet:		**Weight**	**MR Valuation Consulting LLC**	
1	Ability, capacity and skill of personnel who will be assigned to perform the contract and provide the work products and services required	55	0.00	55
2	Relevant experience of proposer's firm and personnel to be assigned to the project in Florida and in the Palm Beach County area	20	0.00	20
3	Time and Task Budget and Maximum Not To Exceed Price.	20	0.00	15
4	Variances: As noted in the body of this RFQ, variances to certain provisions of the RFQ, including variances to the Scope of Services, are unacceptable, such that a variance proposed to such provisions will result in disqualification of the Proposal. Proposals having zero variances will get full points; Proposals having proposed variances will be evaluated on the basis of whether they would, in the Evaluation Committee's estimation, diminish the value of the proposal to the City	5	0.00	5
	TOTAL AVERAGE POSSIBLE POINTS	100	**0**	95
		Total Points Received:	0	

	MR Valuation Consulting LLC

Cali R. [illegible]
7-28-14

City of Lake Worth

Evaluation Matrix

PROCU
7 N
Lal

RFQ 13-14-402

Fair Market Value Appraisal of Electric Utility System

Evaluation Meeting: TBD

WEIGHTED SCOR

RANKED:

	Evaluation Criteria Score Sheet:	**Weight**	**R. E. Pender Inc**
1	Ability, capacity and skill of personnel who will be assigned to perform the contract and provide the work products and services required	55	0.00 30
2	Relevant experience of proposer's firm and personnel to be assigned to the project in Florida and in the Palm Beach County area	20	0.00 15
3	Time and Task Budget and Maximum Not To Exceed Price.	20	0.00 20
4	Variances: As noted in the body of this RFQ, variances to certain provisions of the RFQ, including variances to the Scope of Services, are unacceptable, such that a variance proposed to such provisions will result in disqualification of the Proposal. Proposals having zero variances will get full points; Proposals having proposed variances will be evaluated on the basis of whether they would, in the Evaluation Committee's estimation, diminish the value of the proposal to the City	5	0.00 5
	TOTAL AVERAGE POSSIBLE POINTS	100	**0** 70
	Total Points Received:		0

	R. E. Pender Inc

Colin B. Ch
7-28-14

City of Lake Worth

Evaluation Matrix

JREMENT OFFICE
Jorth Dixie Highway
ke Worth, FL 33460

RFQ 13-14-402

Fair Market Value Appraisal of Electric Utility System

Evaluation Meeting: TBD

E

RANKED:

	Evaluation Criteria Score Sheet:	Weight	Willdan
1	Ability, capacity and skill of personnel who will be assigned to perform the contract and provide the work products and services required	55	0.00 55
2	Relevant experience of proposer's firm and personnel to be assigned to the project in Florida and in the Palm Beach County area	20	0.00 20
3	Time and Task Budget and Maximum Not To Exceed Price.	20	0.00 10
4	Variances: As noted in the body of this RFQ, variances to certain provisions of the RFQ, including variances to the Scope of Services, are unacceptable, such that a variance proposed to such provisions will result in disqualification of the Proposal. Proposals having zero variances will get full points; Proposals having proposed variances will be evaluated on the basis of whether they would, in the Evaluation Committee's estimation, diminish the value of the proposal to the City	5	0.00 5
	TOTAL AVERAGE POSSIBLE POINTS	100	**0** 90
		Total Points Received:	0

	Willdan

7-28-14

City of Lake Worth
Evaluation Matrix

JREMENT OFFICE
Jorth Dixie Highway
ke Worth, FL 33460

RFQ 13-14-402

Fair Market Value Appraisal of Electric Utility System

Evaluation Meeting: TBD

E

RANKED:

Orlando

	Evaluation Criteria Score Sheet:	Weight	Willdan
1	Ability, capacity and skill of personnel who will be assigned to perform the contract and provide the work products and services required	55	0.00 50
2	Relevant experience of proposer's firm and personnel to be assigned to the project in Florida and in the Palm Beach County area	20	0.00 20
3	Time and Task Budget and Maximum Not To Exceed Price. #224k	20	0.00 5
4	Variances: As noted in the body of this RFQ, variances to certain provisions of the RFQ, including variances to the Scope of Services, are unacceptable, such that a variance proposed to such provisions will result in disqualification of the Proposal. Proposals having zero variances will get full points; Proposals having proposed variances will be evaluated on the basis of whether they would, in the Evaluation Committee's estimation, diminish the value of the proposal to the City	5	0.00 5
	TOTAL AVERAGE POSSIBLE POINTS	100	0 80
	Total Points Received:		0

	Willdan

Partner w/ Hartman Consultants

PE Accredited Sr Appraiser 30 yrs exp.
CPA Utility Acct. 16 yrs
– comp. sales 22 yrs
– utility ops, rates, reqs 15 yrs
PE EPL 30 yrs
PLD Real Estate 40 yrs

- Vero Beach
- Winter Park
- S. Daytona Beach

Cost approach ①
income approach ② NFP-v-inv.
comparables ③ ?

7-28-14

City of Lake Worth
Evaluation Matrix

RFQ 13-14-402

Fair Market Value Appraisal of Electric Utility System **TOTAL AVERAGE**

Evaluation Meeting: TBD

RANKED: [redacted]

	Evaluation Criteria Score Sheet:	**Weight**	**MR Valuation Consulting LLC** N Jersy
1	Ability, capacity and skill of personnel who will be assigned to perform the contract and provide the work products and services required	55	0.00 30
2	Relevant experience of proposer's firm and personnel to be assigned to the project in Florida and in the Palm Beach County area	20	0.00 10
3	Time and Task Budget and Maximum Not To Exceed Price. #85k	20	0.00 15
4	Variances: As noted in the body of this RFQ, variances to certain provisions of the RFQ, including variances to the Scope of Services, are unacceptable, such that a variance proposed to such provisions will result in disqualification of the Proposal. Proposals having zero variances will get full points; Proposals having proposed variances will be evaluated on the basis of whether they would, in the Evaluation Committee's estimation, diminish the value of the proposal to the City	5	0.00 5
	TOTAL AVERAGE POSSIBLE POINTS	100	0 60
	Total Points Received:		0

	MR Valuation Consulting LLC

MRV – owner PE 24yrs exp
MAI – real estate 27yrs exp
ASA – Accredited Srtdv. 12yrs exp
PE – utility (?) 4yrs
SCREA – real estate —
– M&A 3yrs
FE – cost approach

cost approach –
comparables – wrong $/cash base
income approach – prematurely

FPL (several)
Nat. Grid

– powerplants –

7-28-14

City of Lake Worth
Evaluation Matrix

RFQ 13-14-402

Fair Market Value Appraisal of Electric Utility System

Evaluation Meeting: TBD

RANKED: [redacted]

Bethesda, M

	Evaluation Criteria Score Sheet:	Weight	Cohn Reznick
1	Ability, capacity and skill of personnel who will be assigned to perform the contract and provide the work products and services required	55	0.00 20
2	Relevant experience of proposer's firm and personnel to be assigned to the project in Florida and in the Palm Beach County area	20	0.00 15
3	Time and Task Budget and Maximum Not To Exceed Price. $53k	20	0.00 20
4	Variances: As noted in the body of this RFQ, variances to certain provisions of the RFQ, including variances to the Scope of Services, are unacceptable, such that a variance proposed to such provisions will result in disqualification of the Proposal. Proposals having zero variances will get full points; Proposals having proposed variances will be evaluated on the basis of whether they would, in the Evaluation Committee's estimation, diminish the value of the proposal to the City	5	0.00 5
	TOTAL AVERAGE POSSIBLE POINTS	100	0 60
	Total Points Received:		0

Finance Emphasis

CFA – Real Estate –
CRE – Real Estate 35yr. exp.
ASA – sr Appraisal (IPP) 13yrs exp.
– Real Estate –
CPA – Renewable Energy –
– Real Estate –

Commercial real estate
renewable / offshore

cost approach
market approach
income approach

	Cohn Reznick

2-28-14

City of Lake Worth

Evaluation Matrix

PROCU
7 N
Lal

RFQ 13-14-402

Fair Market Value Appraisal of Electric Utility System

Evaluation Meeting: TBD

WEIGHTED SCOR

RANKED:

	Evaluation Criteria Score Sheet:	**Weight**	**R. E. Pender Inc**
1	Ability, capacity and skill of personnel who will be assigned to perform the contract and provide the work products and services required	55	0.00 10
2	Relevant experience of proposer's firm and personnel to be assigned to the project in Florida and in the Palm Beach County area	20	0.00 15
3	Time and Task Budget and Maximum Not To Exceed Price. $54,300	20	0.00 20
4	Variances: As noted in the body of this RFQ, variances to certain provisions of the RFQ, including variances to the Scope of Services, are unacceptable, such that a variance proposed to such provisions will result in disqualification of the Proposal. Proposals having zero variances will get full points; Proposals having proposed variances will be evaluated on the basis of whether they would, in the Evaluation Committee's estimation, diminish the value of the proposal to the City	5	0.00 5
	TOTAL AVERAGE POSSIBLE POINTS	100	0 50
		Total Points Received:	0

Winter Park

Sr. Appraiser – sole practitioner – 35yrs exp.

	R. E. Pender Inc

Cost approach
income approach
comparables

RW Beck
Public Service Co. Ind. (Duke)

rates

7-28-14

The City of Lake Worth

RFQ # ___-14-____

Request for Letters of Interest and Professional Qualifications

Fair Market Value Appraisal of City of Lake Worth Electric Utility System

PROCUREMENT OFFICE
7 North Dixie Hwy.
Lake Worth, FL 33461
TEL: 561-586-1674
FAX: 561-586-1673

Where the Tropics Begin

REQUEST FOR QUALIFICATIONS
RFQ ___-14-____

Request for Letters of Interest and Professional Qualifications

Fair Market Value Appraisal of City of Lake Worth Electric Utility System

SUMMARY The City of Lake Worth is requesting Letters of Interest and Professional Qualifications for qualified consultants to provide an appraisal of the fair market value of the City of Lake Worth's Electric Utility System.

TIME AND DATE DUE Time is of the essence and any Proposal received after **Friday, June 20, 2014 at 12:00 P.M. (12:00 Noon),** whether by mail or otherwise, will be returned unopened. It is the sole responsibility of any Proposer to ensure that the Proposer's Letter of Interest and Qualifications are physically received by the City at the address below by the time indicated. The time of receipt shall be determined by the time clock located in the Procurement Office. Proposals shall be placed in a sealed envelope, marked in the lower left-hand corner with the RFQ number and title, and also with the date and hour by which proposals are scheduled to be received.

IMPORTANT NOTE: **This RFQ process is subject to anti-lobbying ordinances and both the State of Florida Code of Ethics and the Palm Beach County Code of Ethics. Please carefully review Sections N, R, and S within Part I of this RFQ, General Information for Proposers, to avoid violation and possible sanctions.**

Interested parties may obtain a copy of this Request for Qualifications by contacting the City of Lake Worth Procurement Office at (561) 586-1674 or from our website at www.lakeworth.org.

All proposals must be delivered or mailed to:

City of Lake Worth Procurement Office, 2nd Floor
7 North Dixie Hwy.
Lake Worth, FL 33460

SEALED ENVELOPE MUST BE IDENTIFIED AS RFQ # ___-14-____.

BY:_____ __ PUBLISH: Demand Star/Onvia
Kari Ha fice May 22, 2014

Request for Letters of Interest and Professional Qualifications

Fair Market Value Appraisal of City of Lake Worth Electric Utility System

RFQ ___-14-____

TABLE OF CONTENTS

COVER PAGE

SUMMARY AND NOTICE OF TIME AND DATE DUE

TABLE OF CONTENTS

I. GENERAL INFORMATION FOR POTENTIAL PROPOSERS

- A. OPENING LOCATION
- B. RFQ DOCUMENTS AND RELATED INFORMATION
- C. PROPOSAL DELIVERY REQUIREMENTS
- D. CHANGES, CLARIFICATIONS, INTERPRETATIONS, ADDITIONAL INFORMATION, AND ADDENDA TO RFQ
- E. TERMS
- F. CITY AS GATEKEEPER OF DOCUMENTS
- G. LEGAL NAME OF PROPOSER
- H. PROPOSAL EXPENSES
- I. PROTESTS
- J. PUBLIC DISCLOSURE
- K. PROPERTY OF THE CITY
- L. RIGHTS RESERVED BY THE CITY
- M. APPLICABLE LAWS
- N. ETHICAL REQUIREMENTS
- O. PUBLIC ENTITY CRIMES
- P. INSURANCE
- Q. DRUG-FREE WORKPLACE
- R. LOBBYING
- S. CONE OF SILENCE
- T. REPRESENTATIONS, WARRANTIES, AND DISCLOSURES
- U. PUBLIC CONTRACTING AND ENVIRONMENTAL CRIMES CERTIFICATION
- V. EQUAL EMPLOYMENT OPPORTUNITY
- W. AMERICANS WITH DISABILITIES ACT
- X. DISCLAIMERS AND DISCLOSURES

II. SUBMITTAL OF DOCUMENTS - FORM AND CONTENT OF PROPOSALS

A. NUMBER AND FORMAT OF COPIES TO BE SUBMITTED; SUBMITTAL TO BE SEALED AND MARKED
B. DOCUMENTS TO BE SUBMITTED
C. CONTENT OF LETTER OF INTEREST
D. CONTENT OF STATEMENT OF QUALIFICATIONS & PROPOSAL

III. SCOPE OF SERVICES

A. INTRODUCTION
B. PRODUCTS AND SERVICES
C. DESCRIPTION OF CITY OF LAKE WORTH
D. DESCRIPTION OF LAKE WORTH ELECTRIC UTILITY SYSTEM

IV. EVALUATION, SELECTION, NEGOTIATIONS AND AWARD

A. GENERAL
B. RFQ TIMETABLE
C. PRELIMINARY EVALUATION OF PROPOSALS
D. "SHORT LIST," INTERVIEWS, AND PRESENTATIONS BY PROPOSERS
E. SELECTION FOR NEGOTIATIONS
F. NEGOTIATION AND AWARD; DEFINITIVE AGREEMENT
G. DEFINITIVE AGREEMENT SUBJECT TO CITY'S PROCUREMENT CODE

EXHIBITS TO THIS REQUEST FOR QUALIFICATIONS

A. PROPOSER INFORMATION & SIGNATURE PAGE
B. CONFIRMATION OF DRUG-FREE WORKPLACE
C. REPRESENTATIONS, WARRANTIES, AND DISCLOSURES
D. SWORN STATEMENT RELATING TO PUBLIC ENTITY CRIMES
E. FORM FOR CERTIFICATION RELATING TO PUBLIC CONTRACTING AND ENVIRONMENTAL CRIMES

Request for Letters of Interest and Professional Qualifications

Fair Market Value Appraisal of City of Lake Worth Electric Utility System

RFQ ___-14-____

I. GENERAL INFORMATION FOR PROPOSERS

PROPOSERS AND PROPOSALS MUST COMPLY WITH AND CONFORM TO THE FOLLOWING INSTRUCTIONS AND REQUIREMENTS IN ORDER TO BE CONSIDERED FOR SELECTION.

Through this Request for Qualifications ("RFQ"), the City of Lake Worth ("City") seeks Letters of Interest and Statements of Qualifications from qualified professional consultants to prepare an appraisal of the fair market value of the Electric Utility System ("System") owned and operated by the City. As discussed in more detail herein, time is of the essence in conducting this RFQ process, in selecting and engaging the most qualified Proposer to perform the requested services, and in the selected Proposer's completing those services. Accordingly, all Proposers are notified and advised that their proposals must comply with and conform to the instructions and requirements in order to be considered for selection.

A. OPENING LOCATION

Proposals submitted in response to this RFQ will be publicly opened at:

City of Lake Worth Procurement Office
Second Floor, Lake Worth City Hall
7 North Dixie Highway
Lake Worth, Florida 33460

Proposals become "Public Records" ten (10) days after the proposal opening or if an award decision is made earlier than this time as provided by Section 119.071, Florida Statutes. Proposers should also note that the definitive contract between the City and the successful Proposer will be a public record and subject to disclosure to any member of the public requesting it.

B. RFQ DOCUMENTS AND RELATED INFORMATION

Notices or bids, requests for proposals, requests for qualifications, and related documents, including addenda, are posted on Demand Star at http://www.DemandStar.com and on the City Procurement Office's web page at http://www.lakeworth.org. Bid documents, including RFQs and requests for proposals are available in portable data format (pdf) files, which may be viewed and printed using Adobe Acrobat software. You may download a free copy of this software (Adobe Acrobat) from the City's web page if you do not have it.

NOTICE: AUTOMATED NOTICES OF ADDENDA ARE ISSUED ONLY VIA THE ONVIA DEMANDSTAR "PLAN HOLDER" DISTRIBUTION SYSTEM.

C. PROPOSAL DELIVERY REQUIREMENTS

It shall be the sole responsibility of each Proposer to ensure that his/her/its proposal is physically delivered to and received by the City's Procurement Office on or before the stated time and date. As stated above, the date and time due are as follows:

12:00 P.M., Eastern Daylight Time, Monday, July 7, 2014.

ANY PROPOSALS RECEIVED AFTER THE STATED TIME AND DATE WILL NOT BE CONSIDERED.

IF A PROPOSAL IS SENT BY U.S. MAIL, OR BY ANY OTHER DELIVERY SERVICE, THE PROPOSER SHALL BE SOLELY RESPONSIBLE FOR ITS TIMELY DELIVERY TO THE CITY'S PROCUREMENT OFFICE. PROPOSALS DELAYED IN THE MAIL, OR IN TRANSIT BY ANY OTHER DELIVERY SERVICE, SHALL NOT BE CONSIDERED AND SHALL NOT BE OPENED AT THE PUBLIC OPENING. Arrangements for the return of any proposals that are received after the stated time and date shall be made at the Proposer's request and at the Proposer's expense.

D. CHANGES, CLARIFICATIONS, INTERPRETATIONS, ADDITIONAL INFORMATION, AND ADDENDA TO RFQ

Changes to this RFQ will be made only by written addenda. A written addendum is the only official method whereby interpretation, clarification or additional information can be given. All addenda will be posted on the City's website - www.lakeworth.org - under Bids and Proposals. It is the sole responsibility of each Proposer to check the City's website for posted addenda. The City will not mail or fax any addenda to a Proposer.

All questions regarding this RFQ should be submitted in writing via mail or e-mail to the following City Purchasing Agent:

Kari Hansen
Purchasing Agent
Procurement Office
7 North Dixie Highway
Lake Worth, FL 33460
KHansen@LakeWorth.org

The City will respond to questions and to requests for clarification, interpretation, and additional information that are received by the above-named Purchasing Agent **no later than 5:00 P.M. Eastern Daylight Time, on Wednesday June 25, 2014**, which is nine (9) calendar days prior to the due date for proposals. The City will not respond to any questions, inquiries, or requests received after this time.

All questions, inquiries, and requests will be answered via addenda. If a question is not answered, the Proposer should assume all relevant information is contained within this RFQ. The City intends to issue responsive addenda as soon as practicable after each request or question is received, and similarly, if the City determines on its own that any addenda are necessary, it will issue them as soon as practicable. In all events, the City will strive to issue all addenda responding to Proposer requests and questions by 5:00 P.M. on Monday, June 16, 2014, which is four (4) calendar days and four (4) business days before the proposal due date; however, the City reserves the right to issue any addenda at any time.

Each Proposer is responsible to examine all RFQ documents and for evaluating and judging all matters relating to the adequacy and accuracy of such documents as perceived and understood by the Proposer. Any inquiries, suggestions, or requests concerning interpretation, clarification, or additional information desired by the Proposer with respect to the RFQ shall be made in writing (electronic mail is satisfactory) through the Lake Worth Procurement Office. The City shall not be responsible for oral interpretations given by any City employee, representative, agent, or other person. **THE ISSUANCE OF A WRITTEN ADDENDUM IS THE ONLY OFFICIAL METHOD WHEREBY ANY INTERPRETATION, CLARIFICATION, OR ADDITIONAL INFORMATION CAN OR WILL BE GIVEN BY THE CITY.**

Each Proposer is responsible to make any such written addenda a part of the Proposer's proposal. It shall be the responsibility of each Proposer, prior to submitting his/her/its proposal, to contact the Lake Worth Procurement Office, using the contact information provided in subsection I.B above, to determine if any addenda were issued in connection with this RFQ. In the absence of express inclusion of the addenda with a Proposer's proposal, the City will accept the Proposer's warranty, set forth in Exhibit C herein, that the Proposer understands and agrees to be bound by any and all such addenda.

The deadline for requesting any interpretations, clarifications, or additional information pertaining to this RFQ shall be Wednesday, June 25, 2014 at 5:00 P.M. EDT. This deadline has been established to maintain fair and practicable handling of all reasonable and timely requests and to ensure fair treatment of all potential Proposers.

E. TERMS

The term "Proposer" refers to a firm, individual, company, or other business entity submitting a response to this RFQ. The complete submittal is referred to as the "Proposal." It is the City's intention to enter into a written agreement, referred to herein as the "Definitive Agreement," with the Proposer whose Proposal, including the definitive terms negotiated between the City and the successful Proposer and embodied in the Definitive Agreement, represents the engagement that is most advantageous to, and in the best interests of, the City and its citizens. As applicable, once the Definitive Agreement is executed, the successful Proposer will thereafter be referred to as the "Contractor."

F. CITY AS GATEKEEPER OF DOCUMENTS

This document is issued directly by the City of Lake Worth and the City shall be the sole distributor of all addenda and/or changes to this document. It is the responsibility of the proposer to confirm the legitimacy of procurement opportunities or notices directly with the Procurement Office. The City is not responsible for any solicitations advertised by subscriber's publications, or other sources not connected with the City and the proposer/bidder should not rely on such sources for information regarding any solicitation made by the City of Lake Worth.

G. LEGAL NAME OF PROPOSER

Each Proposal shall clearly state the legal name, address, and telephone number(s) of the Proposer, regardless whether the Proposer is a company, firm, partnership, individual, or other form of business entity. Each Proposal shall be signed above the typed or printed name and title of the signer. The signer shall have the authority to bind the Proposer to the submitted Proposal.

H. PROPOSAL EXPENSES

All expenses incurred by a Proposer in preparing a Proposal, supporting a Proposal, making a presentation to the City in support of a Proposal, or otherwise incurred in connection with seeking to provide the Scope of Services sought by the City through this RFQ are solely the responsibility of the Proposer, and are not subject to reimbursement by the City in any way or for any reason.

I. PROTESTS

Any Proposer who is aggrieved in connection with this RFQ may protest such procurement. The protest must be filed with the City in accordance with the City's procurement code. A complete copy of the City's procurement code is available on-line at municode.com under the City's Code of Ordinances, Chapter 2, Article XIV, Sections 2-111 through 2-119. The protest procedures are set forth at section 2-115. There are strict deadlines for filing a protest. Failure to abide by the deadlines will result in a waiver of the protest.

J. PUBLIC DISCLOSURE

Upon receipt by the City, all inquiries and responses to inquiries related to this RFQ become "Public Records" under Florida law and are subject to public disclosure pursuant to Chapter 119, Florida Statutes.

Proposals become "Public Records" ten (10) days after the proposal opening, or on the date on which an award decision is made if such decision is made less than ten (10) days

after the proposals are opened. No announcement of pricing or review of the Proposal documents shall be conducted at the public opening of the Proposals.

K. PROPERTY OF THE CITY

All materials submitted in response to this RFQ become the property of the City. The City has the right to use any or all ideas presented in any response to this RFQ, whether amended or not, and selection or rejection of a Proposal(s) does not affect this right. No variances to this provision shall be accepted.

L. RIGHTS RESERVED BY THE CITY

There is no obligation on the part of the City to award the Definitive Agreement to the lowest priced Proposer, and the City reserves the right to award the contract to the Proposer submitting the best overall responsive Proposal which is most advantageous and in the best interests of the City and its citizens. The City shall be the sole judge of the Proposals and the resulting contract that is in its best interests, and its decision shall be final.

The City reserves the right to reject all Proposals and either to re-issue the RFQ or to cancel the RFQ altogether.

The City reserves the right to make such investigations of any Proposer, or of any representations contained in any Proposal, and to solicit additional information or submittals from any Proposer, or from others, including references and former employers, as the City deems necessary to determine the ability of any Proposer to perform the Scope of Services stated in this Request for Qualifications.

M. APPLICABLE LAWS

This RFQ is subject to all applicable laws, including without limitation, the statutes, rules, regulations, and ordinances, of the United States, the State of Florida, Palm Beach County, and the City of Lake Worth. Each Proposer must be qualified to transact business in the State of Florida. Proposers are specifically advised that Proposals and other information submitted in connection with this RFQ, as well as Proposers' inquiries and requests regarding the RFQ, and the City's responses to such inquiries and requests, are subject to Florida's Public Records laws, particularly Chapter 119, Florida Statutes.

N. ETHICAL REQUIREMENTS

This RFQ is subject to the State of Florida Code of Ethics and the Palm Beach County Code of Ethics. Accordingly, there are prohibitions and limitations on the employment of City

officials and employees and contractual relationships providing a benefit to the same. Proposers are highly encouraged to review both the Florida Code of Ethics and the Palm Beach County Code of Ethics in order to insure compliance with the same.

Further, any Proposer coming before the City Commission for an award of a contract and who has made an election campaign contribution in an amount that is more than one hundred dollars ($100.00) to any elected official of the City Commission, who is a current sitting member of the Commission, must disclose such election campaign contribution, verbally and in writing, in their responsive proposal to this RFQ.

O. PUBLIC ENTITY CRIMES

Each Proposer shall submit a sworn statement regarding "public entity crimes" as that term is defined in Section 287.133(1)(g), Florida Statutes, as Exhibit D to its response to this RFQ.

P. INSURANCE

The successful Contractor shall, within five (5) days following execution of the Definitive Agreement with the City, and before doing any work under the Definitive Agreement, procure and maintain the following described insurance, except for coverages specifically waived by the City, on policies and with insurers with an A. M. Best Company Rating of at least A-, for any or all claims which may arise out of, or result from, the services, work and operations carried out pursuant to and under the requirements of the contract documents, whether such services, work and operations are performed by the Contractor, its employees, or by subcontractor(s), or anyone employed by or under the supervision of any of them, or for whose acts any of them may be legally liable.

The Contractor shall require, and shall be responsible for assuring throughout the time the Definitive Agreement is in effect, that any and all of its subcontractors obtain and maintain until the completion of that subcontractor's work, such of the insurance coverages described herein as are required by law to be provided on behalf of their employees and others.

The required insurance shall be obtained and written for not less than the limits of liability specified hereinafter, or as required by law, whichever is greater.

These insurance requirements shall not limit the liability of the Contractor. The City does not represent these types or amounts of insurance to be sufficient or adequate to protect the Contractor's interests or liabilities, but are merely minimums required by the City.

Except for workers compensation and professional liability, the Contractor's insurance policies shall be endorsed to name The City of Lake Worth as an additional insured to the extent of its interests arising from the Definitive Agreement, or from any other contract, lease, or similar document arising from this RFQ.

The Proposer/Contractor waives its right of recovery against the City, to the extent permitted by its insurance policies.

The Proposer's/Contractor's deductibles/self-insured retentions shall be disclosed to the City and may be disapproved by the City. They shall be reduced or eliminated at the option of the City. The Contractor is responsible for the amount of any deductible or self-insured retention.

Insurance required of the Contractor or any other insurance of the Contractor shall be considered primary, and insurance of the City, if any, shall be considered excess, as may be applicable to claims obligations which arise out of the Definitive Agreement between the City and the Contractor.

Workers Compensation Coverage

The Contractor shall purchase and maintain workers compensation insurance for all workers compensation obligations imposed by state law and with employers liability limits of at least $100,000 each accident and $100,000 each employee/$500,000 policy limit for disease, or a valid certificate of exemption issued by the State of Florida, or an affidavit in accordance with Chapter 440, Florida Statutes.

The Contractor shall also purchase any other coverages required by law for the benefit of employees.

General, Automobile and Excess or Umbrella Liability Coverage

The Contractor shall purchase and maintain coverage on forms no more restrictive than the latest editions of the commercial general liability and business auto policies of the insurance services office.

Minimum limits of $1,000,000 per occurrence for all liability must be provided, with excess or umbrella insurance making up the difference, if any, between the policy limits of underlying policies (including employers liability required in the workers compensation coverage section) and the total amount of coverage required.

General Liability Coverage - Occurrence Form Required

Coverage A shall include bodily injury and property damage liability for premises, operations, products and completed operations, independent firms, contractual liability covering this agreement, contract or lease, broad form property damage coverages, and property damage resulting from explosion, collapse or underground (x,c,u) exposures.

Coverage B shall include personal injury.

Coverage C, medical payments, is not required.

The Contractor firm is required to continue to purchase products and completed operations coverage, at least to satisfy this agreement, contract or lease, for a minimum of three years beyond the City's acceptance of renovation or construction projects.

Business Auto Liability Coverage

Business auto liability coverage is to include bodily injury and property damage arising out of ownership, maintenance or use of any auto, including owned, non-owned and hired automobiles and employee non-ownership use.

Excess or Umbrella Liability Coverage

Umbrella liability insurance is preferred, but an excess liability equivalent may be allowed. Whichever type of coverage is provided, it shall not be more restrictive than the underlying insurance policy coverages. Umbrella coverage shall drop down to provide coverage where the underlying limits are exhausted.

Evidence/Certificates of Insurance

Required insurance shall be documented in certificates of insurance. If and when required by the CITY, certificates of insurance shall be accompanied by documentation that is acceptable to the CITY establishing that the insurance agent and/or agency issuing the certificate of insurance has been duly authorized, in writing, to do so by and on behalf of each insurance company underwriting the insurance coverages(s) indicated on each certificate of insurance.

New certificates of insurance are to be provided to the CITY at least 30 days prior to coverage renewals. Failure of the Contractor firm to provide the CITY with such renewal certificates may be considered justification for the CITY to terminate this agreement, contract or lease.

Certificates should contain the following additional information:

1. Indicate that The City of Lake Worth is an additional insured on the general liability policy.
2. Include a reference to the project and the Office of Purchasing number.
3. Disclose any self-insured retentions in excess of $1,000.

4. Designate The City of Lake Worth as the certificate holder as follows:

City of Lake Worth
7 N. Dixie Hwy
Lake Worth, FL 33460

5. Indicate that the CITY shall be notified at least thirty (30) days in advance of cancellation.

Receipt of certificates or other documentation of insurance or policies or copies of policies by the CITY, or by any of its representatives, which indicate less coverage than required does not constitute a waiver of the Contractor's obligation to fulfill the insurance requirements herein.

If requested by the CITY, the Contractor shall furnish complete copies of the Contractor's insurance policies, forms and endorsements, and/or such additional information with respect to its insurance as may be requested.

For commercial general liability coverage the Contractor shall, at the option of the CITY, provide an indication of the amount of claims payments or reserves chargeable to the aggregate amount of liability coverage.

Endorsements/Additional Insurance

The CITY requires the following endorsements or additional types of insurance:

Professional Liability/Malpractice/Errors or Omissions Insurance

The Contractor shall purchase and maintain professional liability or malpractice or errors or omissions insurance with minimum limits of $ 1,000,000 per occurrence.

If a claims made form of coverage is provided, the retroactive date of coverage shall be no later than the inception date of claims made coverage, unless the prior policy was extended indefinitely to cover prior acts.

Coverage shall be extended beyond the policy year either by a supplemental extended reporting period (erp) of as great duration as available, and with no less coverage and with reinstated aggregate limits, or by requiring that any new policy provide a retroactive date no later than the inception date of claims made coverage.

Q. DRUG-FREE WORKPLACE

Consistent with the State of Florida's purchasing statutes, including Section 287.087, Florida Statutes, it is the City's policy that, whenever two or more proposals received by the City are equal with respect to price, quality, and service, a proposal received from a business that certifies that it has implemented a drug-free workplace program shall be given preference in the award process. Accordingly, Proposers are encouraged to carefully review

Exhibit B to this RFQ, “CONFIRMATION OF DRUG-FREE WORKPLACE,” and, if applicable, execute that Confirmation for inclusion with their Proposals.

R. LOBBYING

All prospective Proposers are hereby cautioned not to contact any City Commissioner, member of City Staff, or any member of the Evaluation Committee (to be created by the City as described herein) after submittals are opened, nor attempt to persuade or promote the selection of their Proposals through other channels until notification that the Evaluation Committee has arrived at a recommendation of the most qualified Proposers. Until notification is received, all contacts must be channeled through the Purchasing Office. Failure to comply with these procedures will be cause for disqualification of the Proposer’s Proposal.

S. CONE OF SILENCE

In accordance with the Palm Beach County Lobbyist Registration Ordinance and the City’s procurement code, the City’s procurement cone of silence will be in effect as of the due date for proposals in response to this RFQ. A complete copy of the City’s Procurement Code is available on-line at municode.com under the City of Lake Worth’s Code of Ordinances, Chapter 2, Article XIV, Sections 2-111 through 2-119. All Proposers are strongly encouraged to review the same. In summary, the cone of silence prohibits communication between certain City officials, employees and agents and any entity or person seeking to be awarded a contract (including their lobbyists and potential subcontractors). The cone of silence terminates at the time of award, rejection of all Proposals, or other action by the City to end the selection process.

T. REPRESENTATIONS, WARRANTIES, AND DISCLOSURES

Each Proposer shall submit an executed statement of Representations, Warranties, and Disclosures in the form, and having the content of, Exhibit C to this RFQ.

U. PUBLIC CONTRACTING AND ENVIRONMENTAL CRIMES CERTIFICATION

The City of Lake Worth has adopted a policy prohibiting the award of City contracts to persons, business entities, or affiliates of business entities who have not submitted a written certification to the City that they have not been convicted of bribery, attempted bribery, collusion, restraints of trade, price fixing, or violations of certain environmental laws. A Non-Conviction Certification Form is attached as Exhibit E to this RFQ for this purpose.

V. EQUAL EMPLOYMENT OPPORTUNITY

The City of Lake Worth, consistent with the provisions of Title VI of the Civil Rights Act of 1964 and the Regulations of the United States Department of Commerce (15 CFR, Part 8) issued pursuant to that Act, hereby notifies all prospective Proposers that the City will affirmatively ensure that, in any contract entered into pursuant to this RFQ, minority business enterprises will be afforded full opportunity to participate in response to this RFQ and will not be discriminated against on the grounds of race, color, creed, sex, age, or national origin in consideration for award of a Definitive Agreement pursuant to this RFQ.

W. AMERICANS WITH DISABILITIES ACT

The City of Lake Worth does not discriminate on the basis of any individual's disability status. This non-discrimination policy involves every aspect of the City's functions, including one's access to participation, employment, or treatment in the City's programs and activities. Anyone requiring reasonable accommodation for the public meetings specified in this RFQ, e.g., the public opening of proposals, public information meetings, meetings of the City's Electric Utility Advisory Board, City Commission meetings, presentations, and other public events, should contact the person named as the contact person of the City's Procurement Office at least twenty-four (24) hours in advance of any such activity, to ensure that proper arrangements for the requestor's attendance and participation can be made.

X. DISCLAIMERS AND DISCLOSURES

The information contained herein is provided solely for the convenience of Proposers. While the City has used reasonable diligence in its efforts to ensure that the information herein is as accurate as possible, it is the specific responsibility of each Proposer to assure itself that information contained herein is accurate and complete. Neither the City nor its advisors provide any assurances or warranties as to the accuracy of any information in this RFQ. Any reliance on the contents of this RFQ, or on any communications with City representatives or advisors, shall be at each Proposer's own risk. Proposers should rely exclusively on their own investigations, interpretations and analyses in connection with this matter. The RFQ is being provided by the City without any warranty or representation, express or implied, as to its content, accuracy, or completeness, and no Proposer or other party shall have recourse to the City if any information herein contained shall be inaccurate or incomplete. No warranty or representation is made by the City that any Proposal conforming to these requirements will be selected for consideration, negotiation or approval.

In its sole discretion, the City may withdraw this RFQ either before or after receiving Proposals, may accept or reject Proposals, and may accept Proposals which deviate from the non-material provisions of this RFQ. In its sole discretion, the City may determine the qualifications and acceptability of any firm or firms submitting Proposals in response to this RFQ. Following submission of a Proposal, the Proposer agrees to promptly deliver such further details, information and assurances, including, but not limited to, financial and

disclosure data, relating to the Proposal and/or the Proposer, including the Proposer's affiliates, officers, directors, principals, shareholders, partners and employees, as requested by the City. Any action taken by the City in response to Proposals made pursuant to this RFQ or in making any award or failure or refusal to make any award pursuant to such Proposals, or in any cancellation of award, or in any withdrawal or cancellation of this RFQ, either before or after issuance of an award, shall be without any liability or obligation on the part of the City or the City's advisors.

Any Proposer who submits a Proposal in response to this RFQ fully and expressly acknowledges all the provisions of this section titled DISCLAIMERS AND DISCLOSURES and agrees to be bound by the terms hereof. Any Proposal submitted pursuant to this RFP is at the sole risk and responsibility of the party submitting such Proposal.

II. SUBMITTAL OF DOCUMENTS - FORM AND CONTENT OF PROPOSALS

A. NUMBER AND FORMAT OF COPIES TO BE SUBMITTED; SUBMITTAL TO BE SEALED AND MARKED

Proposers desiring to provide the Scope of Services sought by the City through this RFQ shall **submit one (1) original paper copy, five (5) additional paper copies, and one (1) electronic copy** of their complete Proposals containing all of the requested documents and information set forth below by **12:00 P.M. (12:00 Noon) Eastern Daylight Time on Monday, July 7, 2014.** Electronic copies should preferably be in Adobe Acrobat PDF format, but other industry standards will be considered. Electronic copies should be submitted on a CD or DVD, or other industry standard electronic storage device with a USB connection.

The above-described copies, including the paper copies and the electronic copy, shall be submitted in one sealed package, clearly marked on the outside as follows: "Sealed Proposal in Response to City of Lake Worth RFQ # ____-14-____". The complete submittal package shall be delivered to the following address:

City of Lake Worth Procurement Office
Second Floor, Lake Worth City Hall
7 North Dixie Highway
Lake Worth, Florida 33460

Original letters of interest shall be signed by an authorized representative of the Proposer. All information requested must be submitted. Failure to submit all information may delay evaluation of the qualifications. Submittals that are substantially incomplete or that lack key information may be rejected by the City at its discretion.

B. DOCUMENTS TO BE SUBMITTED

Each Proposer shall submit the following documents and documentation as the Proposal that the Proposer wishes the City to consider in this RFQ process.

1. Letter of Interest
2. Statement of Qualifications & Proposal
3. Exhibit A PROPOSER INFORMATION & SIGNATURE PAGE
4. Exhibit B CONFIRMATION OF DRUG-FREE WORKPLACE
5. Exhibit C REPRESENTATIONS, WARRANTIES, AND DISCLOSURES
6. Exhibit D SWORN STATEMENT RELATING TO PUBLIC ENTITY CRIMES
7. Exhibit E FORM FOR CERTIFICATION RELATING TO PUBLIC CONTRACTING AND ENVIRONMENTAL CRIMES

C. CONTENT OF LETTER OF INTEREST

Each Proposer shall submit a Letter of Interest providing the following information:

1. The Proposer's legal name and business address.

2. Express declaration that the Proposer wishes to be considered for award of a Definitive Agreement to perform the Scope of Services described in this RFQ.

3. A Maximum Not To Exceed Price for which the Proposer will commit to perform the Scope of Services described in this RFQ within the time set forth herein. The Proposer may, but is not required to, submit a listing of hourly rates; the City intends to negotiate hourly rates and cost reimbursement provisions in the Definitive Agreement, and the City may also negotiate for a lower Maximum Not To Exceed Price than that quoted in the Proposer's Proposal.

4. A statement, confirmed by the signature of an authorized principal or officer of the Proposer, that the Proposer is willing and able to perform the Scope of Services described in this RFQ, within the time set forth herein, at a total cost to the City that is no greater than the Proposer's Maximum Not to Exceed Price.

5. A statement, also confirmed by the signature of an authorized principal or officer of the Proposer, that the Proposer will, for additional consideration to be negotiated if and when necessary and appropriate, provide additional services related to the Proposer's analysis of the Economic & Financial Value of the City's Electric Utility System. Such additional services may include making up to three (3) additional presentations to meetings of the Electric Utility Advisory Board ("EUAB"), and up to three (3) additional presentations to the City Commission or to public workshops regarding the City's Electric Utility System (i.e., up to 6 additional presentations in total), or providing support in connection with future proceedings or negotiations. (In this context, "additional presentations" refers to presentations or testimony to meetings after those contemplated as being made to the EUAB and the City Commission in or about December 2014, at the conclusion of the Contractor's completion of the Economic & Financial Value analysis of the City's Electric Utility System.)

D. CONTENT OF STATEMENT OF QUALIFICATIONS & PROPOSAL

Each Proposal shall include the items and content listed below.

1. A description of the Proposer, including the Proposer's form of business entity (corporation, partnership, limited partnership, limited liability company, individual, sole proprietorship, or other), and also including the names of the Proposer's principals and officers.

2. Proof of proper State of Florida business licensure. If the Proposer is a registered business entity in Florida, please submit a statement confirming that the Proposer is in good standing with the Division of Corporations, Florida Department of State. If the Proposer is not

a registered business entity in Florida, please submit documentary evidence confirming that the Proposer is authorized to transact business in Florida.

3. A description of the Proposer's background, size, and general staffing levels, including information for the Proposer organization stating how many total employees work for the Proposer at any time, including full-time, part-time, temporary, and seasonal employees, and also including an indication of how many subcontractors work for the Proposer, on average.

4. A description of any changes in the mode of conducting business that either the Proposer, or the principals who will be dedicated to performing the Scope of Services described herein, have made within the past three (3) years. Such changes should include any mergers, acquisitions, consolidations, changes of employment by principals (from one firm to another), downsizing, or bankruptcy proceedings.

5. Principals and Key Personnel. Specific listing of the principals and other key personnel (including, without limitation, support staff, junior technical or analytical employees, subcontractors, and others) who will be dedicated to performing the Scope of Services, including the relevant experience of each principal and other key personnel listed. At a minimum, include a current resumé or curriculum vitae for each principal who will be dedicated to performing the Scope of Services; resumés or curriculum vitae for other, non-principal key personnel are desirable but not required.

6. Professional Licenses and Certifications. For each principal or other key personnel, include information regarding such person's professional licenses and certifications, e.g., Professional Engineer's licenses, including the state or states in which each person is licensed, and license numbers; certification as an Accredited Member or as an Accredited Senior Appraiser by the American Society of Appraisers; or other certifications or licenses that the Proposer believes are relevant to the Proposer's ability to perform the Scope of Services.

7. Approach to Scope of Work. Provide a detailed description of the approach, or approaches, that the Proposer intends to use to perform the Scope of Services requested by the City.

8. Time and Task Schedule and Person-Hours Budget

Background. The City anticipates executing the Definitive Agreement for the services sought through this RFQ by September 4, 2014, and the City expects the work to be substantively and substantially complete by December 8, 2014. (Reasonable allowances will be made for final editorial changes and non-substantive revisions between December 8 and the final presentation to the City Commission in December 2014.) This schedule is necessary to support other decisions that the City must make relative to its electric utility operations, and accordingly, **any variance to this schedule that reflects a substantive completion date later than December 8, 2014, will be disqualified**. Proposers should also expect that the Definitive Agreement for the contemplated services will include severe financial penalties if the work is not substantively and substantially complete by December 8, 2014.

The Proposer's Time and Task Schedule and Person-Hours Budget should identify major components (tasks) of the work effort that the Proposer intends to apply to perform the Scope of Services, and may also identify more detailed components of the work effort. For each work component or task identified, the Proposer should indicate:

a. the estimated person-hours of each principal and other key personnel with respect to each task;

b. the total person-hours that the Proposer estimates will be required to complete each such task; and

c. the projected date on which each task will be completed.

9. A Maximum Not To Exceed Price for which the Proposer will commit to perform the Scope of Services described in this RFQ within the time set forth herein. The Proposer may, but is not required to, submit a listing of hourly rates; the City intends to negotiate hourly rates and cost reimbursement provisions in the Definitive Agreement, and the City may also negotiate for a lower Maximum Not To Exceed Price than that quoted in the Proposer's Proposal.

10. Listing of similar projects that the Proposer, or current principals of the Proposer, have completed over the past five (5) years, including the services provided and the location of the facilities or systems for which a Fair Market Value estimate was provided. As applicable and available, please include citations, titles and dates of reports, information as to how the Proposer's work product can be accessed via the internet, and any other information that would assist the City in accessing and reviewing relevant work products of the Proposer or its principals. The requested listing should include any legal proceedings, including arbitrations, civil trials, eminent domain proceedings, or other proceedings in which the Proposer's estimate of the fair market value of facilities or a system was at issue.

11. Variances. While the City allows Proposers to specify any desired variances to the RFQ terms, conditions, and specifications, **other than variances to the Scope of Services, which will not be acceptable,** the number and extent of variances taken will be considered in determining the Proposer who is most advantageous to the City. **Proposers should note specifically that the date set forth herein for substantive and substantial completion of the Scope of Services, December 8, 2014, has been established by the City to accommodate and facilitate other decisions that the City expects to make in connection with its Electric Utility System, and accordingly, any proposed variance that materially deviates from this date will result in the Proposal being disqualified**.

12. References. A list of references from past or current clients for whom the Proposer, or its principals who will be dedicated to performing the Scope of Services herein, have performed work that is similar to that requested in the Scope of Services herein. The information provided should include the name of the client, the names of individuals familiar with the Proposer's (or principal's) work for the client, and telephone numbers, mailing addresses, and e-mail addresses for such contact persons.

13. Addenda. The Proposal should include all addenda issued in connection with this RFQ, if practicable. If a Proposal does not include the addenda, the City will accept the Proposer's warranty, set forth in Exhibit C herein, that the Proposer understands and agrees to be bound by any and all such addenda.

14. Each Proposer shall list any lawsuits, including case number and venue, in which either the Proposer firm or any principals of the firm, or any subcontractors whom the Proposer intends to assign to work on the Scope of Services, has been involved relative to services performed or that the Proposer was alleged to have failed to perform over the last five (5) years.

15. Any additional information that the Proposer believes would assist the City in evaluating the Proposer's Proposal.

III. SCOPE OF SERVICES

A. INTRODUCTION

In summary, the City of Lake Worth is seeking a professional opinion of the Fair Market Value of the City's Electric Utility System, as described below, including a written report setting forth the Contractor's estimate of the Fair Market Value, with full documentation, and presentations of the Contractor's analysis or analyses to the City's Electric Utility Advisory Board and the City Commission. If necessary, the scope of services may be expanded after completion of the initial written report and presentations to include participation in additional future City activities relating to the future of the City's Electric Utility System, and potentially in legal proceedings relating to the Fair Market Value of the City's Electric Utility System. The City anticipates that such potential expansion of scope will be addressed in the Definitive Agreement between the City and the Contractor, e.g., by agreement on the scope of such services and the hourly rates at which the Contractor would be compensated if the City were to desire to engage the Contractor to provide such services.

For reference, the City believes that the following definitions, which were obtained from the website of the American Society of Appraisers (at http://www.appraisers.org/search-results?indexCatalogue=sandard&searchQuery=fair+market+value&wordsMode=0), will be applicable to the Contractor's estimate or estimates of the Fair Market Value of the City's Electric Utility System.

> **Fair Market Value**, An opinion expressed in terms of money, at which the property would change hands between a willing buyer and a willing seller, neither being under any compulsion to buy or to sell and both having reasonable knowledge of relevant facts, as of a specific date.
>
> **Fair Market Value in Continued Use with an Earnings Analysis**, An opinion, expressed in terms of money, at which the property would change hands between a willing buyer and a willing seller, neither being under any compulsion to buy or to sell and both having reasonable knowledge of relevant facts, as of a specific date and supported by the earnings of the business.

The City desires that the professional opinion of the Fair Market Value of the City's Electric Utility System be stated as of January 1, 2015, and also as of January 1, 2016, and as of January 1, 2017.

B. PRODUCTS AND SERVICES

1. Written Report

The Fair Market Value estimate (or estimates) must be fully documented in a written report to be submitted to the City by the Contractor. The written report must include all assumptions, supporting analyses and calculations, and other supporting materials upon which the estimate/opinion is based.

2. Presentations to Electric Utility Advisory Board and City Commission

The Contractor will also be expected to present the Fair Market Value opinions, and detailed results of the Contractor's analyses supporting those Fair Market Value opinions, to meetings of the Electric Utility Advisory Board and the City Commission. Those meetings are expected to be held on or about **December 15-16, 2014**.

3. Additional Services

The City may, in the future, require the professional services of the Contractor in connection with matters relating to the Fair Market Value of the City's Electric Utility System. Such additional professional services may include additional presentations to the EUAB or the City Commission beyond those presentations expected to be made in December 2014, and potentially participation in negotiations or legal proceedings relating to the Fair Market Value. Such services should not be included in the Proposer's Time and Task Budget or in the Maximum Not To Exceed Price. However, the City desires that the Contractor commit to providing such services as they may become necessary in the future, and the City expects to negotiate hourly rates and appropriate terms and conditions for such services as part of the Definitive Agreement.

C. DESCRIPTION OF CITY OF LAKE WORTH

The City of Lake Worth is a municipality and political subdivision of the State of Florida, duly organized and existing under the laws of that State. The City is governed by a duly elected City Commission composed of five (5) members, a Mayor, Vice Mayor, and three District Commissioners, each of whom are elected to two-year terms. The City is located in Palm Beach County, Florida. The current population of the City is approximately 37,000 persons. Geographically, the City comprises approximately 7 square miles and includes a beach on the Atlantic Ocean as well as frontage on the body of water known as Lake Worth.

The City owns and operates an Electric Utility System, as well as water and wastewater utility systems. The Electric Utility System is subject to ultimate decision-making governance by the City Commission, which meets between two and four times per month, as required by the needs of the City. The City Commission regularly receives input from the Electric Utility Advisory Board (EUAB), a standing board consisting of citizens appointed by the City Commission to investigate and consider electric utility issues and to provide their advice to the Commissioners. The EUAB normally meets monthly.

D. DESCRIPTION OF LAKE WORTH ELECTRIC UTILITY SYSTEM

1. Overview of Customers and Load Characteristics

The City's Electric Utility System provides service to approximately 25,000 customer accounts (meters). The City's 2014 Net Energy for Load is estimated to be approximately 440,000 megawatt-hours (MWH), and is expected to grow modestly over the foreseeable future, to approximately 475,000 MWH in 2023. The City's maximum annual peak demands are estimated to be approximately 88 megawatts (MW) in 2014, and to increase to approximately 100 MW in 2023.

2. Generation Assets

The City's generation assets include approximately 90 MW of City-owned generating units, of which 9.9 MW is only available for emergency operations. The City's generation assets also include generation entitlements to approximately 20.6 MW (including associated energy) of the output of the St. Lucie 2 nuclear power plant, which is jointly owned by the Florida Municipal Power Agency (FMPA) and Florida Power & Light Company (FPL) and operated by FPL; and to approximately 10.0 MW (including associated energy) of the output of the Stanton I coal-fired power plant, which is jointly owned by FMPA, the Orlando Utilities Commission (OUC), and the Kissimmee Utility Authority (KUA), and operated by OUC. The City's generation entitlements to the St. Lucie plant's output arise through a number of contracts and amendments, the chief of which are the St. Lucie Power Sales Contract between FMPA and Lake Worth dated June 1, 1982, as amended; and the St. Lucie Project Support Contract dated as of June 1, 1982, as amended. The City's generation entitlements to the Stanton I unit's output arise through certain contracts, as amended, the chief of which are the Stanton I Power Sales Contract between FMPA and Lake Worth dated January 16. 1984, and the Stanton I Project Support Contract dated January 16, 1984.

The City is also a party to similar power supply contracts for the output of the Stanton II coal-fired unit operated by OUC. The City's rights and obligations with respect to the Stanton II unit's output have been assigned to the Kissimmee Utility Authority (KUA); however, the City remains contingently liable under those agreements, in the event that KUA were to default.

In February 2013, the City entered into that certain INTERLOCAL AGREEMENT FOR PURCHASE AND SALE OF ELECTRIC ENERGY AND CAPACITY AND ASSET MANAGEMENT SERVICES BETWEEN THE CITY OF LAKE WORTH, FLORIDA AND ORLANDO UTILITIES COMMISSION (the "OUC-COLW PPA"), pursuant to which OUC provides Wholesale Electric Service and Asset Management Services to the City.

Pursuant to the OUC-COLW PPA, OUC will supply wholesale electric energy and wholesale electric capacity to the City for a minimum initial term of 3 years, from January 1, 2014 through December 31, 2016. The City has the option to extend its purchases from OUC for 2 additional years, one year at a time, i.e., for the period January 1-December 31, 2017, and for the period January 1-December 31, 2018. Unless amended by the written agreement of both Parties, the OUC-COLW PPA will terminate no later than December 31, 2018.

Detailed information regarding the City's generation assets, including all of the relevant contracts and amendments relating to the City's entitlements to the output of the St. Lucie 2 nuclear unit and the Stanton 1 unit, will be made available on the City's website. A redacted version of the OUC-COLW PPA will also be available on the City's website. The OUC-COLW PPA contains certain information that OUC has designated as trade secret information; to the extent necessary to formulate the Contractor's professional opinion of the Fair Market Value of the City's Electric Utility System, the City will make an unredacted copy of the PPA available for review by the Contractor at the City's offices, subject to the Contractor's execution of a confidentiality agreement.

3. Transmission Assets

The City is interconnected to the Florida bulk power supply grid at the Hypoluxo Substation, which is located in the western part of the City and which is owned by the City of Lake Worth and operated by FPL. The City owns and operates 10.09 circuit miles of 138 kV transmission lines. The City also obtains network transmission service from FPL pursuant to a Service Agreement for Network Integration Transmission Service between FPL and Lake Worth, and also pursuant to a Contract for Interconnected Operations between FPL and Lake Worth.

4. Distribution Assets

The City owns and operates approximately 199 miles of distribution lines. Approximately 101 miles of those are operated at 26 kV, and approximately 98 miles are operated at 4 kV.

The City owns and maintains eleven (11) distribution substations. The City also owns the Hypoluxo Substation, which interconnects the City's Electric System to FPL's transmission system. FPL operates the Hypoluxo Substation pursuant to an agreement with the City.

IV. EVALUATION, SELECTION, NEGOTIATIONS, AND AWARD

This section of the RFQ sets forth the RFQ timetable and descriptions of the major steps and procedures that the City anticipates taking in reaching its decision to select a Contractor and execute a Definitive Agreement for the Scope of Services.

A. GENERAL

This section describes the timetable for this RFQ process and the major steps in that process, including: preliminary evaluation and ranking of Statements of Qualifications and Proposals, the selection of a "short list" of Proposers who will be invited to be interviewed and make presentations to the City, the City Commission's decision on the ranking of Proposers, the negotiations for a Definitive Agreement, beginning with the highest-ranked Proposer, and the Definitive Agreement.

B. RFQ TIMETABLE

The anticipated schedule for this RFQ and contract approval is as follows:

- Advertisement of RFQ — June 16, 2014
- Final Date for Proposers' Questions/Requests — June 25, 2014 at 5:00 P.M.
- City Responses to Questions – continuing, responses as quickly as feasible
- Final City Responses to Questions — July 2, 2014 at 5:00 P.M.
- Proposals Due — July 7, 2014 at 12:00 P.M.
- Initial Evaluation Committee Meeting — July 7, 2014
- Presentations to EUAB & City Commission — July 15-16, 2014
- Evaluation Committee Meeting — July 24-25, 2014
- Negotiations with Highest-Ranked Proposer — July 28-31, 2014
- Contingency: Additional Negotiations — August 4-8, 2014
- Recommendation to City Commission — August 12, 2014
- Proposal Selection by City Commission — August 19, 2014
- Contract Execution — September 4, 2014

The City reserves the right to amend the anticipated schedule as it deems necessary.

C. PRELIMINARY EVALUATION OF PROPOSALS

The City intends to appoint an Evaluation Committee to evaluate the Proposals submitted by all Proposers. The Evaluation Committee will convene for a public meeting to identify qualified Proposals, which will be those substantially complete Proposals that are (a) submitted by Proposers who are capable of performing the Scope of Services and (b) not disqualified because of any criteria set forth herein, e.g., unacceptable proposed variances, conflicts of interest, and the like. The members of the Evaluation Committee will be charged with individually evaluating the responses prior to the meeting.

D. "SHORT LIST," INTERVIEWS, AND PRESENTATIONS BY PROPOSERS

The City intends to invite all qualified Proposers to make presentations to the Evaluation Committee and the EUAB, and, assuming that scheduling can be managed, to the City Commission.

E. SELECTION FOR NEGOTIATIONS

Following the anticipated interviews and presentations, the Evaluation Committee will again meet, in public, to evaluate and rank the proposals on the basis of the following criteria.

	Evaluation Criteria Score Sheet:	Weight
1	Ability, capacity and skill of personnel who will be assigned to perform the contract and provide the work products and services required.	55
2	Relevant experience of proposer's firm and personnel to be assigned to the project in Florida and in the Palm Beach County area.	20
3	Time and Task Budget and Maximum Not To Exceed Price.	20
4	Variances: As noted in the body of this RFQ, variances to certain provisions of the RFQ, including variances to the Scope of Services, are unacceptable, such that a variance proposed to such provisions will result in disqualification of the Proposal. Proposals having zero variances will get full points; Proposals having proposed variances will be evaluated on the basis of whether they would, in the Evaluation Committee's estimation, diminish the value of the proposal to the City.	5

Each Proposal will be evaluated individually and in the context of all other Proposals. Proposals must be fully responsive to the requirements described in this RFQ and to any subsequent requests for clarification or additional information made by the City through

written addenda to this RFQ. Proposals failing to comply with the submission requirements, or those unresponsive to any material part of this RFQ, may be disqualified. There is no obligation on the part of the City to award the Definitive Agreement to the lowest priced Proposer, and the City reserves the right to award the Definitive Agreement to the Proposer submitting the Proposal that is most advantageous to, and in the best interests of, the City and its citizens. The City shall be the sole judge of the Proposals and the resulting Definitive Agreement that is in the City's best interests, and the City's decision shall be final.

At the public meeting, and after making its evaluations, the Evaluation Committee will make recommendations to the City Commission of the highest-ranked Proposer, the next-highest-ranked Proposer, and the following next-highest-ranked Proposer, assuming that there are 3 qualified Proposers. The Evaluation Committee may identify and rank additional Proposers through this process.

At a subsequent public meeting, the City Commission will decide on the Proposers, and the ranking of those Proposers, with whom the City's designated negotiation team will seek to negotiate the Definitive Agreement for the performance of the Scope of Services. The City Commission is not bound by the recommendation of the Evaluation Committee and the City Commission may deviate from the Evaluation Committee's recommendations in determining the proposal that is most advantageous to and in the best interests of the City and its citizens.

F. NEGOTIATION AND AWARD; DEFINITIVE AGREEMENT

The City will designate a negotiating team, which is expected to consist of the City Manager, the City Utilities Director, the City Finance Director, a representative designated by the City Attorney, and a representative of the EUAB; the City Commission may designate additional members of the negotiation team. The City will first attempt to negotiate the terms and conditions of a Definitive Agreement, including the fee for the services to be rendered, with the highest-ranked Proposer. If the City and the highest-ranked Proposer cannot agree on satisfactory terms and conditions for the desired Definitive Agreement, the City reserves the right to terminate negotiations with the highest-ranked Proposer and move to the next-highest-ranked Proposer to commence negotiations. Negotiations may continue in this process until the City is able to enter into a Definitive Agreement with a Proposer that best meets the needs of the City.

The Definitive Agreement must be approved by the City Commission. The Definitive Agreement will commence upon its execution by the City.

Each fiscal year of the Definitive Agreement, and any renewals or extensions, will be subject to the availability of funds lawfully appropriated for its purpose by the State of Florida and the City of Lake Worth. The City need not include a lack of appropriations provision in the resulting contract to avail itself of such legal right.

The Contractor's hourly rates, which will be negotiated after the Proposals are ranked and the highest-ranked Proposers are identified, shall remain firm at least through December 31, 2015. Escalation rates beyond that date will be negotiated in the Definitive Agreement.

G. DEFINITIVE AGREEMENT SUBJECT TO CITY'S PROCUREMENT CODE

Award(s) resulting from this solicitation shall be subject to the provisions of THE CITY OF LAKE WORTH CODE OF ORDINANCES, "PROCUREMENT CODE OF THE CITY OF LAKE WORTH", CHAPTER 2, ARTICLE XIV, SECTIONS 2-111 THROUGH 2-119.

For questions and additional information, contact:

PROCUREMENT

Kari Hansen
Purchasing Agent
7 North Dixie Highway
Lake Worth, FL 33460
Tel: (561) 586-1674
E-mail: KHansen@LakeWorth.org

EXHIBIT "A"

PROPOSER INFORMATION AND SIGNATURE PAGE

(This page must be completed and inserted in the First Section)

RFQ ___-14-____

Company Name: _____

Authorized Signature: _____

Signature Print Name

Title: _____

Corporate Address: _____

Street

_____

City State Zip Code

Telephone: _____ Fax: _____

Email Address: _____

Remit To Address:

_____

Street

_____

City State Zip Code

Web Site (if applicable:_____

Federal ID No.:_____ This is a requirement of every Proposer.

EXHIBIT "B"

CONFIRMATION OF DRUG-FREE WORKPLACE**

Consistent with the State of Florida's purchasing statutes, including Section 287.087, Florida Statutes, it is the City's policy that, whenever two or more proposals are equal with respect to price, quality, and service which are received by any political subdivision for the procurement of commodities or contractual services, a proposal received from a business that certifies that it has implemented a drug-free workplace program shall be given preference in the award process. In order to have a drug-free workplace program, a business shall:

(1) Publish a statement notifying employees that the unlawful manufacture, distribution, dispensing, possession, or use of a controlled substance is prohibited in the workplace and specifying the actions that will be taken against employees for violations of such prohibition.

(2) Inform employees about the dangers of drug abuse in the workplace, the business's policy of maintaining a drug-free workplace, any available drug counseling, rehabilitation, and employee assistance programs, and the penalties that may be imposed upon employees for drug abuse violations.

(3) Give each employee engaged in providing the commodities or contractual services that are being provided pursuant to a contract with the City a copy of the statement specified in subsection (1).

(4) In the statement specified in subsection (1), notify the employees that, as a condition of working on the commodities or contractual services that are under contract to the City, the employee will abide by the terms of the statement and will notify the employer of any conviction of, or plea of guilty or nolo contendere to, any violation of Chapter 893, Florida Statutes, or of any controlled substance law of the United States or any state, for a violation occurring in the workplace no later than 5 days after such conviction.

(5) Impose a sanction on, or require the satisfactory participation in a drug abuse assistance or rehabilitation program if such is available in the employee's community by, any employee who is so convicted.

(6) Make a good faith effort to continue to maintain a drug-free workplace through implementation of this section.

As the person authorized to sign this statement on behalf of _____, I certify that _____ complies fully with the above requirements.

_____ _____
Authorized Representative's Signature Date

_____ _____
Name: Position:

**** If this form is not returned, the City will assume the Proposer has not implemented a drug-free workplace program.**

Exhibit "C"

REPRESENTATIONS, WARRANTIES, AND DISCLOSURES

RFQ ___-14-____

STATE OF _____}
} SS:
COUNTY OF _____}

I am an officer of the Proposer firm, named below, submitting its Statement of Qualifications as part of the Proposer firm's response to an RFQ, and I am authorized to make the following Representations, Warranties, and Disclosures on behalf of the Proposer. I certify or affirm that to the best of my knowledge and belief, the following statements are true:

1. Proposer agrees that its Proposal may become part of any contract entered into between the City and the Proposer.

2. There are no actual, apparent or potential conflicts of interest between the Proposer or any sub-consultants or subcontractors and the interests of the City of Lake Worth, that are present or could develop with respect to the Scope of Services set forth in the RFQ and the City, any parties to this RFQ solicitation, or any third parties with whom or with which the Proposer has any business relationship. If there are any such conflicts, they are listed on a separate addendum to this Exhibit C. For purposes of this representation and warranty, the Proposer understands that the Proposer must disclose any relationships, whether past, present, or future, with any entity that might have an interest in the Proposer's estimate of the actual Fair Market Value of the City's Electric Utility System being either greater than or less than its true Fair Market Value, as defined by the American Society of Appraisers. The Proposer also understands that the Proposer must also disclose any engagements, whether past, present, or future, with any investor-owned utility that has acquired, or that has sought to acquire, any municipal or cooperative utility system anywhere in the United States.

3. Submittal of Proposer's Proposal is made without connection, coordination, or cooperation with any persons, company or party making another submittal, and that it is in all respects fair and in good faith without collusion or fraud.

4. All principals and officers of the Proposer are named in the Proposal, and no person(s) other than those named therein has (have) any interest in the Proposal or in the anticipated contract.

5. The Proposer understands and agrees to all elements of the Proposal unless otherwise indicated or negotiated, and that the Proposal may become part of, and incorporated by reference into, any contract entered into between the City and the Proposer.

6. Proposer has not filed for bankruptcy in the past five (5) years.

7. Neither Proposer nor any of Proposer's principals have been convicted of or indicted for a felony or fraud.

8. Neither the Proposer, nor any parent corporations, affiliates, subsidiaries, members, shareholders, partners, officers, directors or executives thereof are presently debarred, proposed for debarment or declared ineligible to bid or participate in any federal, state or local government agency projects and are not listed on the Florida convicted vendor list.

9. Pursuant to Section 287.133, Florida Statutes, a person or affiliate who has been placed on the convicted firm list maintained by the State of Florida may not submit a proposal to the City of Lake Worth for 36 months following the date of being placed on the convicted firm list. Proposer certifies that submittal of its proposal does not violate this statute.

10. The Proposer understands and agrees to be bound by any and all addenda issued by the City in connection with this RFQ.

11. Proposer warrants that it has not employed or retained any company or person, other than a bona fide employee working solely for Proposer, to solicit or secure an award under this RFQ and that it has not paid or agreed to pay any person, company, corporation, individual, or firm, other than a bona fide employee working solely for Proposer, any fee, commission, percentage, gift, or any other consideration contingent upon or resulting from an award.

12**. Proposer certifies that the "Maximum Not To Exceed Price" as proposed is accurate, complete, and current at the time of submission of the Proposer's response to the RFQ, and that such Maximum Not To Exceed Price reflects hourly rates that are no higher than those charged to the Proposer's other customers for the same or substantially similar services in the Southeast Region of the United States during the preceding twelve (12) month period.**

13. Proposer certifies to the best of its knowledge and belief that no funds or other resources received in connection with an award of a contract from this RFQ will be used

directly or indirectly to influence legislation or any other official action by the Florida Legislature or any state agency.

14. Proposer recognizes and agrees that the City will not be responsible or liable in any way for any losses that the Proposer may suffer from the disclosure or submittal of information in its Proposal to third parties or to the public generally.

I certify or affirm that to the best of my knowledge and belief, the above statements are true and correct.

Proposer: _____

Officer's Name: _____

Title: _____

Signature: _____

AFFIRMED AND SIGNED before me this _____ day of _____, 2014

by _____ *(name)* as the

_____ *(title)* of _____

(Proposer), and who is personally known to me or produced

_____ as identification.

_____
Notary Public

Notary Stamp:

EXHIBIT "D"

SWORN STATEMENT PURSUANT TO SECTION 287.133(3)(a), FLORIDA STATUTES, ON PUBLIC ENTITY CRIMES

1. This sworn statement is submitted to _____
(print name of the public entity)

by_____
(print individual's name and title)

for_____
(print name of entity submitting sworn statement)

whose business address is

_____

_____

and (if applicable) its Federal Employer Identification Number (FEIN) is:

_____

(If the entity has no FEIN, include the Social Security Number of the Individual signing this sworn statement: _____

2. I understand that a "public entity crime" as defined in Paragraph 287.133(1)(g), **Florida Statutes**, means a violation of any state or federal law by a person with respect to and directly related to the transaction of business with any public entity or with an agency or political subdivision of any other state or of the United States, including, but not limited to, any bid or contract for goods or services to be provided to any public entity or an agency or political subdivision or any other state or of the United States and involving antitrust, fraud, theft, bribery, collusion, racketeering, conspiracy, or material misrepresentation.

3. I understand that "convicted" or "conviction" as defined in Paragraph 287.133(1)(b), **Florida Statutes**, means a finding of guilt or a conviction of a public entity crime, with or without an adjudication of guilt, in any federal or state trial court of record relating to charges brought by indictment or information after July 1, 1989, as a result of jury verdict, nonjury trial, or entry of a plea of guilty or nolo contendere.

4. I understand that an "affiliate" as defined in Paragraph 287.133(1)(a), **Florida Statutes**, means:

a. A predecessor or successor of a person convicted of a public entity crime; or

b. An entity under the control any natural person who is active in the management of the entity and who has been convicted of a public entity crime. The term affiliate" includes those officers, directors, executives, partners, shareholders, employees, members, and agents who are active in the management of an affiliate. The ownership by one person of shares constituting a controlling interest in another person or a pooling of equipment or income among persons when not for fair market value under an arm's length agreement, shall be a prima facie case that one person controls another person. A person who knowingly enters into a joint venture with a person who has been convicted of a public entity crime in Florida

during the preceding 36 months shall be considered an affiliate.

c. I understand that a "person" as defined in Paragraph 287.133(1)(e), **Florida Statutes**, means any natural person or entity organized under the laws of any state or of the United States with the legal power to enter into binding contract and which bids or applies to bid on contracts for the provision of goods or services let by a public entity, or which otherwise transacts or applies to transact business with a public entity. The term "person" includes those officers, directors, executives, partners, shareholders, employees, members, and agents who are active in management of an entity.

d. Based on information and belief, the statement which I have marked below is true in relation to the entity submitting this sworn statement. **(indicate which statement applies.)**

_____ Neither the entity submitting this sworn statement, nor any of its officers, directors, executives, partners, shareholders, employees, members, or agents who are active in the management of the entity, nor any affiliate of the entity has been charged with and convicted of a public entity crime subsequent to July 1, 1989.

_____ The entity submitting this sworn statement, or one or more of its officers, directors, executives, partners, shareholders, employees, members, or agents who are active in the management of the entity, or an affiliate of the entity has been charged with and convicted of a public entity crime subsequent to July 1, 1989.

_____ The entity submitting this sworn statement, or one or more of its officers, directors, executives, partners, shareholders, employees, members, or agents who are active in the management of the entity, or an affiliate of the entity has been charged with and convicted of a public entity crime subsequent to July 1, 1989. However, there has been a subsequent proceeding before a Hearing Officer of the State of Florida, Division of Administrative Hearings and the Final Order entered by the Hearing Officer determined that it was not in the public interest to place the entity submitting this sworn statement on the convicted vendor list. **(attach a copy of the final order)**

[REMAINDER OF PAGE INTENTIONALLY LEFT BLANK]

I UNDERSTAND THAT THE SUBMISSION OF THIS FORM TO THE CONTRACTING OFFICER FOR THE PUBLIC ENTITY IDENTIFIED IN PARAGRAPH 1 (ONE) ABOVE IS FOR THAT PUBLIC ENTITY ONLY AND, THAT HIS FORM IS VALID THROUGH DECEMBER 31 OF THE CALENDAR YEAR IN WHICH IT IS FILED. I ALSO UNDERSTAND THAT I AM REQUIRED TO INFORM THE PUBLIC ENTITY PRIOR TO ENTERING INTO A CONTRACT IN EXCESS OF THE THRESHOLD AMOUNT PROVIDED IN SECTION 287.017, FLORIDA STATUTES FOR CATEGORY TWO OF ANY CHANGE IN THE INFORMATION CONTAINED IN THIS FORM.

_____
(signature)

AFFIRMED AND SIGNED before me this _____ day of _____,

2014, by _____ *(name),* as the

_____ *(title)* of _____ *(Proposer*

firm), and who is personally known to me or who produced _____

_____ as identification.

_____
Notary Public

Notary Stamp:

EXHIBIT "E"

FORM FOR CERTIFICATION RELATING TO PUBLIC CONTRACTING AND ENVIRONMENTAL CRIMES

THIS FORM MUST BE SIGNED AND SWORN TO IN THE PRESENCE OF A NOTARY PUBLIC OR OTHER OFFICIAL AUTHORIZED TO ADMINISTER OATHS.

This sworn statement is submitted to the City of Lake Worth ("City") by

_____ [printed or typed name of

individual] on behalf of _____ [printed or typed

name of entity submitting this sworn statement], whose business address is:

_____

_____

_____

_____

If applicable, the entity's Federal Employer Identification Number (FEIN) is

_____. If the entity has no FEIN, the Social Security Number of the individual

signing this sworn statement is _____.

I understand that no person or entity shall be awarded or receive a City contract for public improvements, procurement of goods or services (including professional services) or a City lease, franchise, concession or management agreement, or shall receive a grant of City monies unless such person or entity has submitted a written certification to the City that it has not:

(1) been convicted of bribery or attempting to bribe a public officer or employee of the City of Lake Worth, Palm Beach County, the State of Florida, or any other public entity, including but not limited to the government of the United States, any state, or any local government authority in the United States, in that officer's or employee's official capacity; or

(2) been convicted of an agreement or collusion among bidders or prospective bidders in restraint of freedom of competition, by agreement to bid a fixed price, or otherwise; or

(3) been convicted of a violation of an environmental law that, in the sole opinion of the City's Purchasing Agent, reflects negatively upon the ability of the person or entity to conduct business in a responsible manner; or

(4) made an admission of guilt of such conduct described in items (1), (2), or (3) above, which is a matter of record, but has not been prosecuted for such conduct, or has made an admission of guilt of such conduct, which is a matter of record pursuant to formal prosecution. An admission of guilt shall be construed to include a plea of *nolo contendere*; or

(5) where an officer, official, agent or employee of a business entity has been convicted of or has admitted guilt to any of the crimes set forth above on behalf of such an entity and pursuant to the direction or authorization of an official thereof (including the person committing the offense, if he is an official of the business entity), the business shall be chargeable with the conduct hereinabove set forth. A business entity shall be chargeable with the conduct of an affiliated entity, whether wholly owned, partially owned, or one which has common ownership or a common Board of Directors. For purposes of this Certification, business entities are affiliated if, directly or indirectly, one business entity controls or has the power to control another business entity, or if an individual or group of individuals controls or has the power to control both entities. Indicia of control shall include, without limitation, interlocking management or ownership, identity of interests among family members, shared organization of a business entity following the ineligibility of a business entity under this policy, or using substantially the same management, ownership or principals as the ineligible entity.

Any person or entity who claims that this policy is inapplicable to him/her/it because a conviction or judgment has been reversed by a court of competent jurisdiction, shall prove the same with documentation satisfactory to the City's Purchasing Agent. Upon presentation of such satisfactory proof, the person or entity shall be allowed to contract with the City.

[REMAINDER OF PAGE INTENTIONALLY LEFT BLANK]

I UNDERSTAND THAT THE SUBMISSION OF THIS FORM TO THE PURCHASING AGENT FOR THE CITY OF LAKE WORTH IS VALID THROUGH DECEMBER 31 OF THE CALENDAR YEAR IN WHICH IT IS FILED. I ALSO UNDERSTAND THAT ANY CONTRACT OR BUSINESS TRANSACTION SHALL PROVIDE FOR SUSPENSION OF PAYMENTS, OR TERMINATION, OR BOTH, IF THE PURCHASING AGENT OR THE CITY MANAGER DETERMINES THAT SUCH PERSON OR ENTITY HAS MADE FALSE CERTIFICATION.

_____
(Signature)

STATE OF _____

COUNTY OF _____

Sworn to and subscribed before me this _____ day of _____, 2014 by

_____.
(Print, type, or stamp Commissioned name of Notary Public)

Signatory Requirement – In the case of a business entity other than a partnership or a corporation, the affidavit shall be executed by an authorized agent of the entity. In the case of a partnership, this affidavit shall be executed by the general partner or partners. In the case of a corporation, this affidavit shall be executed by the corporate president.

City of Lake Worth
Evaluation Matrix

PROCUREMENT OFFICE
7 North Dixie Highway
Lake Worth, FL 33460

RFQ 13-14-402

Fair Market Value Appraisal of Electric Utility System

Evaluation Meeting: Wednesday, September 3, 2014

TOTAL AVERAGE WEIGHTED SCORI

		RANKED:	3	1	2
	Evaluation Criteria Score Sheet:	**Weight**	**Cohn Reznick**	**MR Valuation Consulting LLC**	**Willdan**
1	Ability, capacity and skill of personnel who will be assigned to perform the contract and provide the work products and services required	55	41.00	45.40	48.00
2	Relevant experience of proposer's firm and personnel to be assigned to the project in Florida and in the Palm Beach County area	20	13.40	16.60	17.00
3	Time and Task Budget and Maximum Not To Exceed Price.	20	16.80	16.40	11.00
4	Variances: As noted in the body of this RFQ, variances to certain provisions of the RFQ, including variances to the Scope of Services, are unacceptable, such that a variance proposed to such provisions will result in disqualification of the Proposal. Proposals having zero variances will get full points; Proposals having proposed variances will be evaluated on the basis of whether they would, in the Evaluation Committee's estimation, diminish the value of the proposal to the City	5	5.00	5.00	5.00
	TOTAL AVERAGE POSSIBLE POINTS	100	76	83	81
	Total Points Received:		381	417	405

	Cohn Reznick	**MR Valuation Consulting LLC**	**Willdan**
Maximum Not to Exceed Price	$ 53,000	$ 85,000	$ 224,000
Exhibit A	yes	yes	yes
Exhibit B	yes	yes	yes
Exhibit C	yes	yes	yes
Exhibit D	yes	yes	yes
Exhibit E	yes	yes	yes

City of Lake Worth

Evaluation Matrix

RFQ 13-14-402

Fair Market Value Appraisal of Electric Utility System

Evaluation Meeting: Wednesday, September 3, 2014

EVALUATOR: Bob Beckel

RANKED:

	Evaluation Criteria Score Sheet:	**Weight**	**Cohn Reznick**	**MR Valuation Consulting LLC**	**Willdan**
1	Ability, capacity and skill of personnel who will be assigned to perform the contract and provide the work products and services required	55	40	45	50
2	Relevant experience of proposer's firm and personnel to be assigned to the project in Florida and in the Palm Beach County area	20	15	15	15
3	Time and Task Budget and Maximum Not To Exceed Price.	20	12	15	12
4	Variances: As noted in the body of this RFQ, variances to certain provisions of the RFQ, including variances to the Scope of Services, are unacceptable, such that a variance proposed to such provisions will result in disqualification of the Proposal. Proposals having zero variances will get full points; Proposals having proposed variances will be evaluated on the basis of whether they would, in the Evaluation Committee's estimation, diminish the value of the proposal to the City	5	5	5	5
	TOTAL POINTS RECEIVED	(100)	0 72	0 80	0 82

	Cohn Reznick	**MR Valuation Consulting LLC**	**Willdan**
Maximum Not to Exceed Price	$ 53,000	$ 85,000	$ 224,000
Exhibit A	yes	yes	yes
Exhibit B	yes	yes	yes
Exhibit C	yes	yes	yes
Exhibit D	yes	yes	yes
Exhibit E	yes	yes	yes

City of Lake Worth

Evaluation Matrix

RFQ 13-14-402

Fair Market Value Appraisal of Electric Utility System

Evaluation Meeting: Wednesday, September 3, 2014

EVALUATOR: Ibrahim Chalhoub

RANKED:

	Evaluation Criteria Score Sheet:	**Weight**	**Cohn Reznick**	**MR Valuation Consulting LLC**	**Willdan**
1	Ability, capacity and skill of personnel who will be assigned to perform the contract and provide the work products and services required	55	45	42	45
2	Relevant experience of proposer's firm and personnel to be assigned to the project in Florida and in the Palm Beach County area	20	12	14	15
3	Time and Task Budget and Maximum Not To Exceed Price.	20	17	16	10
4	Variances: As noted in the body of this RFQ, variances to certain provisions of the RFQ, including variances to the Scope of Services, are unacceptable, such that a variance proposed to such provisions will result in disqualification of the Proposal. Proposals having zero variances will get full points; Proposals having proposed variances will be evaluated on the basis of whether they would, in the Evaluation Committee's estimation, diminish the value of the proposal to the City	5	5	5	5
	TOTAL AVERAGE POSSIBLE POINTS	(100)	~~0~~79	~~0~~77	~~0~~75

	Cohn Reznick	**MR Valuation Consulting LLC**	**Willdan**
Maximum Not to Exceed Price	$ 53,000	$ 85,000	$ 224,000
Exhibit A	yes	yes	yes
Exhibit B	yes	yes	yes
Exhibit C	yes	yes	yes
Exhibit D	yes	yes	yes
Exhibit E	yes	yes	yes

City of Lake Worth

Evaluation Matrix

RFQ 13-14-402
Fair Market Value Appraisal of Electric Utility System
Evaluation Meeting: Wednesday, September 3, 2014

EVALUATOR: **Caroline Clore**

RANKED: [redacted]

	Evaluation Criteria Score Sheet:	**Weight**	**Cohn Reznick**	**MR Valuation Consulting LLC**	**Willdan**
1	Ability, capacity and skill of personnel who will be assigned to perform the contract and provide the work products and services required	55	50	45	50
2	Relevant experience of proposer's firm and personnel to be assigned to the project in Florida and in the Palm Beach County area	20	18	18	20
3	Time and Task Budget and Maximum Not To Exceed Price.	20	20	19	18
4	Variances: As noted in the body of this RFQ, variances to certain provisions of the RFQ, including variances to the Scope of Services, are unacceptable, such that a variance proposed to such provisions will result in disqualification of the Proposal. Proposals having zero variances will get full points; Proposals having proposed variances will be evaluated on the basis of whether they would, in the Evaluation Committee's estimation, diminish the value of the proposal to the City	5	5	5	5
	TOTAL POINTS RECEIVED	(100)	**0**	**0**	**0**

	Cohn Reznick	**Consulting LLC**	**Willdan**
Maximum Not to Exceed Price	$ 53,000	$ 85,000	$ 224,000
Exhibit A	yes	yes	yes
Exhibit B	yes	yes	yes
Exhibit C	yes	yes	yes
Exhibit D	yes	yes	yes
Exhibit E	yes	yes	yes

City of Lake Worth

Evaluation Matrix

RFQ 13-14-402

Fair Market Value Appraisal of Electric Utility System

Evaluation Meeting: Wednesday, September 3, 2014

EVALUATOR: Clay Lindstrom

RANKED:

	Evaluation Criteria Score Sheet:	**Weight**	**Cohn Reznick**	**MR Valuation Consulting LLC**	**Willdan**
1	Ability, capacity and skill of personnel who will be assigned to perform the contract and provide the work products and services required	55	FLA - NO 35	NJ / Detroit / [illegible] 40	FLA - yes 50
2	Relevant experience of proposer's firm and personnel to be assigned to the project in Florida and in the Palm Beach County area	20	WND / Machinery 12	Proposed under TEDD MSA / [illegible] 18	very 20
3	Time and Task Budget and Maximum Not To Exceed Price.	20	20	12	5
4	Variances: As noted in the body of this RFQ, variances to certain provisions of the RFQ, including variances to the Scope of Services, are unacceptable, such that a variance proposed to such provisions will result in disqualification of the Proposal. Proposals having zero variances will get full points; Proposals having proposed variances will be evaluated on the basis of whether they would, in the Evaluation Committee's estimation, diminish the value of the proposal to the City	5	cost approach market approach (comps) income approach 5	income / cash flow obsolescence / asset valuation sales (comps) cost. intangibles / contracts 5	cost income sales comps intangibles 5
	TOTAL POINTS RECEIVED	(100)	72 0	75 0	90 0

	Cohn Reznick	**MR Valuation Consulting LLC**	**Willdan**
Maximum Not to Exceed Price	$ 53,000	$ 85,000	$ 224,000
Exhibit A	yes	yes	yes
Exhibit B	yes	yes	yes
Exhibit C	yes	yes	yes
Exhibit D	yes	yes	yes
Exhibit E	yes	yes	yes

City of Lake Worth

Evaluation Matrix

RFQ 13-14-402

Fair Market Value Appraisal of Electric Utility System

Evaluation Meeting: Wednesday, September 3, 2014

EVALUATOR: Joel Rutsky

RANKED:

	Evaluation Criteria Score Sheet:	**Weight**	**Cohn Reznick**	**MR Valuation Consulting LLC**	**Willdan**
1	Ability, capacity and skill of personnel who will be assigned to perform the contract and provide the work products and services required	55	35	35	45
2	Relevant experience of proposer's firm and personnel to be assigned to the project in Florida and in the Palm Beach County area	20	10	18	15
3	Time and Task Budget and Maximum Not To Exceed Price.	20	15	20	10
4	Variances: As noted in the body of this RFQ, variances to certain provisions of the RFQ, including variances to the Scope of Services, are unacceptable, such that a variance proposed to such provisions will result in disqualification of the Proposal. Proposals having zero variances will get full points; Proposals having proposed variances will be evaluated on the basis of whether they would, in the Evaluation Committee's estimation, diminish the value of the proposal to the City	5	5	5	5
	TOTAL POINTS RECEIVED	(100)	0 65	0 98	0 75

	Cohn Reznick	**MR Valuation Consulting LLC**	**Willdan**
Maximum Not to Exceed Price	$ 53,000	$ 85,000	$ 224,000
Exhibit A	yes	yes	yes
Exhibit B	yes	yes	yes
Exhibit C	yes	yes	yes
Exhibit D	yes	yes	yes
Exhibit E	yes	yes	yes

CITY OF LAKE WORTH

7 North Dixie Highway · Lake Worth, Florida 33460 · Phone: 561-586-1600· Fax: 561-586-1750

AGENDA DATE: December 2, 2014, Regular Meeting **DEPARTMENT:** Electric Utility

---

EXECUTIVE BRIEF

TITLE:
Agreement with Willdan Financial Services, Inc. for Economic and Financial Valuation of Electric Utility System

SUMMARY:
This Agreement will authorize the economic and financial value of the City's electric utility system to be performed.

BACKGROUND and JUSTIFICATION:
The Electric Utility Advisory Board was directed to evaluate 3 alternatives concerning the Lake Worth Electric Utility: (1) sell the system, (2) build new generation facilities to serve the customers directly, (3) consider a long term purchase power agreement with another generating source. In order to consider a sale of the utility, it was determined that an Economic and Financial Value of the Electric Utility System to the City of Lake Worth and a Fair Market Value Appraisal needed to be determined. Request for Letters of Interest and Professional Qualifications (RFQ # 13-14-403) was issued June 20, 2014. Three proposals were received. Evaluation of the written submissions were done and the top 2 firms GAI and Willdan were selected to do Oral presentations. Evaluations of proposals were completed September 3, 2014. Willdan Financial Services of Orlando, Florida was selected as the preferred qualified consultant.

The Economic and Financial Value of the Electric System seeks to obtain an economic value to the City of Lake Worth. The Economic and Financial Value is determined as a going business concern for the indefinite future in terms of revenue provided to the City's general functions and activities. It was determined that Willdan Financial Services, Inc. had the best overall professional qualifications to perform the services requested in the RFQ. This appraisal is one component of the 'sale option' and should be performed in conjunction with the Fair Market Appraisal of the Electric Utility. The Willdan Financial Services price for this study is $46,000.

This item was reviewed and recommended by the Electric Utility Advisory Board on November 5, 2014.

MOTION:
I move to approve / not approve an agreement with Willdan Financial Services, Inc. in the amount of $46,000 to perform consulting services for the Economic and Financial Value of Electric Utility System of Lake Worth.

ATTACHMENT(S):
1) Fiscal Impact Analysis
2) Request for Letters of Interest
3) Agreement
4) Economic Value of Electric System

FISCAL IMPACT ANALYSIS

A. Five Year Summary of Fiscal Impact:

Fiscal Years	2015	2016	2017	2018	2019
Capital Expenditures	0	0	0	0	0
Operating Expenditures	46,000	0	0	0	0
External Revenues	0	0	0	0	0
Program Income	0	0	0	0	0
In-kind Match	0	0	0	0	0
Net Fiscal Impact	46,000	0	0	0	0
No. of Addn'l Full-Time Employee Positions	0	0	0	0	0

B. Recommended Sources of Funds/Summary of Fiscal Impact:

Account Number	Account Description	FY2015 Budget	Current Balance	Agenda Expense	Remaining Balance
401-6020-531-31-90	Other	209,000	184,675	-46,000	138,675

C. Department Fiscal Review: Clay Lindstrom

The City of Lake Worth

RFQ # ___-14-____

Request for Letters of Interest and Professional Qualifications

Economic and Financial Value of Lake Worth Electric Utility System to the City of Lake Worth

PROCUREMENT OFFICE
7 North Dixie Hwy.
Lake Worth, FL 33461
TEL: 561-586-1674
FAX: 561-586-1673

Where the Tropics Begin

REQUEST FOR QUALIFICATIONS
RFQ ___-14-____

Request for Letters of Interest and Professional Qualifications

Economic and Financial Value of Lake Worth Electric Utility System to the City of Lake Worth

SUMMARY The City of Lake Worth is requesting Letters of Interest and Professional Qualifications for qualified consultants to provide comprehensive economic and financial analyses of the value to the City of Lake Worth of continuing to operate its Electric Utility System, including analyses of what total sale price the City would have to receive for its Electric Utility System in order to be as well off, economically and financially, as if it were to continue operating the System.

TIME AND DATE DUE Time is of the essence and any Proposal received after **Friday, June 20, 2014 at 12:00 P.M.,** whether by mail or otherwise, will be returned unopened. It is the sole responsibility of any Proposer to ensure that the Proposer's Letter of Interest and Qualifications are physically received by the City at the address below by the time indicated. The time of receipt shall be determined by the time clock located in the Procurement Office. Proposals shall be placed in a sealed envelope, marked in the lower left-hand corner with the RFQ number and title, and also with the date and hour by which proposals are scheduled to be received.

IMPORTANT NOTE: **This RFQ process is subject to anti-lobbying ordinances and both the State of Florida Code of Ethics and the Palm Beach County Code of Ethics. Please carefully review Sections N, R, and S within Part I of this RFQ, General Information for Proposers, to avoid violation and possible sanctions.**

Interested parties may obtain a copy of this Request for Qualifications by contacting the City of Lake Worth Procurement Office at (561) 586-1674 or from our website at www.lakeworth.org.

All proposals must be delivered or mailed to:

City of Lake Worth Procurement Office, 2nd Floor
7 North Dixie Hwy.
Lake Worth, FL 33460

SEALED ENVELOPE MUST BE IDENTIFIED AS RFQ # ___-14-____.

BY:_____ PUBLISH: Demand Star/Onvia
Kari Hansen/ Procurement Office May 22, 2014

Request for Letters of Interest and Professional Qualifications

Economic and Financial Value of Lake Worth Electric Utility System to the City of Lake Worth

RFQ ___-14-____

TABLE OF CONTENTS

COVER PAGE

SUMMARY AND NOTICE OF TIME AND DATE DUE

TABLE OF CONTENTS

I. GENERAL INFORMATION FOR PROPOSERS

- A. OPENING LOCATION
- B. RFQ DOCUMENTS AND RELATED INFORMATION
- C. PROPOSAL DELIVERY REQUIREMENTS
- D. CHANGES, CLARIFICATIONS, INTERPRETATIONS, ADDITIONAL INFORMATION, AND ADDENDA TO RFQ
- E. TERMS
- F. CITY AS GATEKEEPER OF DOCUMENTS
- G. LEGAL NAME OF PROPOSER
- H. PROPOSAL EXPENSES
- I. PROTESTS
- J. PUBLIC DISCLOSURE
- K. PROPERTY OF THE CITY
- L. RIGHTS RESERVED BY THE CITY
- M. APPLICABLE LAWS
- N. ETHICAL REQUIREMENTS
- O. PUBLIC ENTITY CRIMES
- P. INSURANCE
- Q. DRUG-FREE WORKPLACE
- R. LOBBYING
- S. CONE OF SILENCE
- T. REPRESENTATIONS, WARRANTIES, AND DISCLOSURES
- U. PUBLIC CONTRACTING AND ENVIRONMENTAL CRIMES CERTIFICATION
- V. EQUAL EMPLOYMENT OPPORTUNITY
- W. AMERICANS WITH DISABILITIES ACT
- X. DISCLAIMERS AND DISCLOSURES

II. SUBMITTAL OF DOCUMENTS - FORM AND CONTENT OF PROPOSALS

A. NUMBER AND FORMAT OF COPIES TO BE SUBMITTED; SUBMITTAL TO BE SEALED AND MARKED
B. DOCUMENTS TO BE SUBMITTED
C. CONTENT OF LETTER OF INTEREST
D. CONTENT OF STATEMENT OF QUALIFICATIONS & PROPOSAL

III. SCOPE OF SERVICES

A. INTRODUCTION
B. PRODUCTS AND SERVICES
C. DESCRIPTION OF CITY OF LAKE WORTH
D. DESCRIPTION OF LAKE WORTH ELECTRIC UTILITY SYSTEM

IV. EVALUATION, SELECTION, NEGOTIATIONS AND AWARD

A. GENERAL
B. RFQ TIMETABLE
C. PRELIMINARY EVALUATION OF PROPOSALS
D. “SHORT LIST,” INTERVIEWS, AND PRESENTATIONS BY PROPOSERS
E. SELECTION FOR NEGOTIATIONS
F. NEGOTIATION AND AWARD; DEFINITIVE AGREEMENT
G. DEFINITIVE AGREEMENT SUBJECT TO CITY’S PROCUREMENT CODE

EXHIBITS TO THIS REQUEST FOR QUALIFICATIONS

A. PROPOSER INFORMATION & SIGNATURE PAGE
B. CONFIRMATION OF DRUG-FREE WORKPLACE
C. REPRESENTATIONS, WARRANTIES, AND DISCLOSURES
D. SWORN STATEMENT RELATING TO PUBLIC ENTITY CRIMES
E. FORM FOR CERTIFICATION RELATING TO PUBLIC CONTRACTING AND ENVIRONMENTAL CRIMES

Request for Letters of Interest
and Professional Qualifications

Economic and Financial Value of City of Lake Worth Electric Utility System

RFQ ___-14-____

I. GENERAL INFORMATION FOR PROPOSERS

PROPOSERS AND PROPOSALS MUST COMPLY WITH AND CONFORM TO THE FOLLOWING INSTRUCTIONS AND REQUIREMENTS IN ORDER TO BE CONSIDERED FOR SELECTION.

Through this Request for Qualifications ("RFQ"), the City of Lake Worth ("City") seeks Letters of Interest and Statements of Qualifications from qualified professional consultants to prepare comprehensive analyses of the economic and financial value of the Lake Worth Electric Utility System ("System") to the City of Lake Worth. As discussed in more detail herein, time is of the essence in conducting this RFQ process, in selecting and engaging the most qualified Proposer to perform the requested services, and in the selected Proposer's completing those services. Accordingly, all Proposers are notified and advised that their proposals must comply with and conform to the instructions and requirements in order to be considered for selection.

A. OPENING LOCATION

Proposals submitted in response to this RFQ will be publicly opened at:

City of Lake Worth Procurement Office
Second Floor, Lake Worth City Hall
7 North Dixie Highway
Lake Worth, Florida 33460

Proposals become "Public Records" ten (10) days after the proposal opening or if an award decision is made earlier than this time as provided by Section 119.071, Florida Statutes. Proposers should also note that the definitive contract between the City and the successful Proposer will be a public record and subject to disclosure to any member of the public requesting it.

B. RFQ DOCUMENTS AND RELATED INFORMATION

Notices or bids, requests for proposals, requests for qualifications, and related documents, including addenda, are posted on Demand Star at http://www.DemandStar.com and on the City Procurement Office's web page at http://www.lakeworth.org. Bid documents, including RFQs and requests for proposals are available in portable data format (pdf) files,

which may be viewed and printed using Adobe Acrobat software. You may download a free copy of this software (Adobe Acrobat) from the City's web page if you do not have it.

NOTICE: AUTOMATED NOTICES OF ADDENDA ARE ISSUED ONLY VIA THE ONVIA DEMANDSTAR "PLAN HOLDER" DISTRIBUTION SYSTEM.

C. PROPOSAL DELIVERY REQUIREMENTS

It shall be the sole responsibility of each Proposer to ensure that his/her/its proposal is physically delivered to and received by the City's Procurement Office on or before the stated time and date. As stated above, the date and time due are as follows:

12:00 P.M., Eastern Daylight Time, July 7, 2014.

ANY PROPOSALS RECEIVED AFTER THE STATED TIME AND DATE WILL NOT BE CONSIDERED.

IF A PROPOSAL IS SENT BY U.S. MAIL, OR BY ANY OTHER DELIVERY SERVICE, THE PROPOSER SHALL BE SOLELY RESPONSIBLE FOR ITS TIMELY DELIVERY TO THE CITY'S PROCUREMENT OFFICE. PROPOSALS DELAYED IN THE MAIL, OR IN TRANSIT BY ANY OTHER DELIVERY SERVICE, SHALL NOT BE CONSIDERED AND SHALL NOT BE OPENED AT THE PUBLIC OPENING. Arrangements for the return of any proposals that are received after the stated time and date shall be made at the Proposer's request and at the Proposer's expense.

D. CHANGES, CLARIFICATIONS, INTERPRETATIONS, ADDITIONAL INFORMATION, AND ADDENDA TO RFQ

Changes to this RFQ will be made only by written addenda. A written addendum is the only official method whereby interpretation, clarification or additional information can be given. All addenda will be posted on the City's website - www.lakeworth.org - under Bids and Proposals. It is the sole responsibility of each Proposer to check the City's website for posted addenda. The City will not mail or fax any addenda to a Proposer.

All questions regarding this RFQ should be submitted in writing via mail or e-mail to the following City Purchasing Agent:

Kari Hansen
Purchasing Agent
Procurement Office
7 North Dixie Highway
Lake Worth, FL 33460
KHansen@LakeWorth.org

The City will respond to questions and to requests for clarification, interpretation, and additional information that are received by the above-named Purchasing Agent **no later than 5:00 P.M. Eastern Daylight Time, on Wednesday June 25, 2014**, which is nine (9)

calendar days prior to the due date for proposals. The City will not respond to any questions, inquiries, or requests received after this time.

All questions, inquiries, and requests will be answered via addenda. If a question is not answered, the Proposer should assume all relevant information is contained within this RFQ. The City intends to issue responsive addenda as soon as practicable after each request or question is received, and similarly, if the City determines on its own that any addenda are necessary, it will issue them as soon as practicable. In all events, the City will strive to issue all addenda responding to Proposer requests and questions by 5:00 P.M. on Monday, June 16, 2014, which is four (4) calendar days and four (4) business days before the proposal due date; however, the City reserves the right to issue any addenda at any time.

Each Proposer is responsible to examine all RFQ documents and for evaluating and judging all matters relating to the adequacy and accuracy of such documents as perceived and understood by the Proposer. Any inquiries, suggestions, or requests concerning interpretation, clarification, or additional information desired by the Proposer with respect to the RFQ shall be made in writing (electronic mail is satisfactory) through the Lake Worth Procurement Office. The City shall not be responsible for oral interpretations given by any City employee, representative, agent, or other person. **THE ISSUANCE OF A WRITTEN ADDENDUM IS THE ONLY OFFICIAL METHOD WHEREBY ANY INTERPRETATION, CLARIFICATION, OR ADDITIONAL INFORMATION CAN OR WILL BE GIVEN BY THE CITY.**

Each Proposer is responsible to make any such written addenda a part of the Proposer's proposal. It shall be the responsibility of each Proposer, prior to submitting his/her/its proposal, to contact the Lake Worth Procurement Office, using the contact information provided in subsection I.B above, to determine if any addenda were issued in connection with this RFQ. In the absence of express inclusion of the addenda with a Proposer's proposal, the City will accept the Proposer's warranty, set forth in Exhibit C herein, that the Proposer understands and agrees to be bound by any and all such addenda.

The deadline for requesting any interpretations, clarifications, or additional information pertaining to this RFQ shall be Wednesday, June 25, 2014 at 5:00 P.M. EDT. This deadline has been established to maintain fair and practicable handling of all reasonable and timely requests and to ensure fair treatment of all potential Proposers.

E. TERMS

The term "Proposer" refers to a firm, individual, company, or other business entity submitting a response to this RFQ. The complete submittal is referred to as the "Proposal." It is the City's intention to enter into a written agreement, referred to herein as the "Definitive Agreement," with the Proposer whose Proposal, including the definitive terms negotiated between the City and the successful Proposer and embodied in the Definitive Agreement, represents the engagement that is most advantageous to, and in the best interests of, the City and its citizens. As applicable, once the Definitive Agreement is executed, the successful Proposer will thereafter be referred to as the "Contractor."

F. CITY AS GATEKEEPER OF DOCUMENTS

This document is issued directly by the City of Lake Worth and the City shall be the sole distributor of all addenda and/or changes to this document. It is the responsibility of the proposer to confirm the legitimacy of procurement opportunities or notices directly with the Procurement Office. The City is not responsible for any solicitations advertised by subscriber's publications, or by other sources not connected with the City, and the Proposer/bidder should not rely on such sources for information regarding any solicitation made by the City of Lake Worth.

G. LEGAL NAME OF PROPOSER

Each Proposal shall clearly state the legal name, address, and telephone number(s) of the Proposer, regardless whether the Proposer is a company, firm, partnership, individual, or other form of business entity. Each Proposal shall be signed above the typed or printed name and title of the signer. The signer shall have the authority to bind the Proposer to the submitted Proposal.

H. PROPOSAL EXPENSES

All expenses incurred by a Proposer in preparing a Proposal, supporting a Proposal, making a presentation to the City in support of a Proposal, or otherwise incurred in connection with seeking to provide the Scope of Services sought by the City through this RFQ are solely the responsibility of the Proposer, and are not subject to reimbursement by the City in any way or for any reason.

I. PROTESTS

Any Proposer who is aggrieved in connection with this RFQ may protest such procurement. The protest must be filed with the City in accordance with the City's procurement code. A complete copy of the City's procurement code is available on-line at municode.com under the City's Code of Ordinances, Chapter 2, Article XIV, Sections 2-111 through 2-119. The protest procedures are set forth at section 2-115. There are strict deadlines for filing a protest. Failure to abide by the deadlines will result in a waiver of the protest.

J. PUBLIC DISCLOSURE

Upon receipt by the City, all inquiries and responses to inquiries related to this RFQ become "Public Records" under Florida law and are subject to public disclosure pursuant to Chapter 119, Florida Statutes.

Proposals become "Public Records" ten (10) days after the proposal opening, or on the date on which an award decision is made if such decision is made less than ten (10) days

after the proposals are opened. No announcement of pricing or review of the Proposal documents shall be conducted at the public opening of the Proposals.

K. PROPERTY OF THE CITY

All materials submitted in response to this RFQ become the property of the City. The City has the right to use any or all ideas presented in any response to this RFQ, whether amended or not, and selection or rejection of a Proposal does not affect this right. **No variances to this provision shall be accepted**.

L. RIGHTS RESERVED BY THE CITY

There is no obligation on the part of the City to award the Definitive Agreement to the lowest priced Proposer, and the City reserves the right to award the Definitive Agreement to the Proposer submitting the best overall responsive Proposal which is most advantageous and in the best interests of the City and its citizens. The City shall be the sole judge of the Proposals and the resulting contract that is in its best interests, and its decision shall be final.

The City reserves the right to reject all Proposals and either to re-issue the RFQ or to cancel the RFQ altogether.

The City reserves the right to make such investigations of any Proposer, or of any representations contained in any Proposal, and to solicit additional information or submittals from any Proposer, or from others, including references and former employers, as the City deems necessary to determine the ability of any Proposer to perform the Scope of Services stated in this Request for Qualifications.

M. APPLICABLE LAWS

This RFQ is subject to all applicable laws, including without limitation, the statutes, rules, regulations, and ordinances, of the United States, the State of Florida, Palm Beach County, and the City of Lake Worth. Each Proposer must be qualified to transact business in the State of Florida. Proposers are specifically advised that Proposals and other information submitted in connection with this RFQ, as well as Proposers' inquiries and requests regarding the RFQ, and the City's responses to such inquiries and requests, are subject to Florida's Public Records laws, particularly Chapter 119, Florida Statutes.

N. ETHICAL REQUIREMENTS

This RFQ is subject to the State of Florida Code of Ethics and the Palm Beach County Code of Ethics. Accordingly, there are prohibitions and limitations on the employment of City

officials and employees and contractual relationships providing a benefit to the same. Proposers are highly encouraged to review both the Florida Code of Ethics and the Palm Beach County Code of Ethics in order to insure compliance with the same.

Further, any Proposer coming before the City Commission for an award of a contract and who has made an election campaign contribution in an amount that is more than one hundred dollars ($100.00) to any elected official of the City Commission, who is a current sitting member of the Commission, must disclose such election campaign contribution, verbally and in writing, in their responsive proposal to this RFQ.

O. PUBLIC ENTITY CRIMES

Each Proposer shall submit a sworn statement regarding "public entity crimes" as that term is defined in Section 287.133(1)(g), Florida Statutes, as Exhibit D to its response to this RFQ.

P. INSURANCE

The successful Contractor shall, within five (5) days following execution of the Definitive Agreement with the City, and before doing any work under the Definitive Agreement, procure and maintain the following described insurance, except for coverages specifically waived by the City, on policies and with insurers with an A. M. Best Company Rating of at least A-, for any or all claims which may arise out of, or result from, the services, work and operations carried out pursuant to and under the requirements of the contract documents, whether such services, work and operations are performed by the Contractor, its employees, or by subcontractor(s), or anyone employed by or under the supervision of any of them, or for whose acts any of them may be legally liable.

The Contractor shall require, and shall be responsible for assuring throughout the time the Definitive Agreement is in effect, that any and all of its subcontractors obtain and maintain until the completion of that subcontractor's work, such of the insurance coverages described herein as are required by law to be provided on behalf of their employees and others.

The required insurance shall be obtained and written for not less than the limits of liability specified hereinafter, or as required by law, whichever is greater.

These insurance requirements shall not limit the liability of the Contractor. The City does not represent these types or amounts of insurance to be sufficient or adequate to protect the Contractor's interests or liabilities, but are merely minimums required by the City.

Except for workers compensation and professional liability, the Contractor's insurance policies shall be endorsed to name The City of Lake Worth as an additional insured to the extent of its interests arising from the Definitive Agreement, or from any other contract, lease, or similar document arising from this RFQ.

The Proposer/Contractor waives its right of recovery against the City, to the extent permitted by its insurance policies.

The Proposer's/Contractor's deductibles/self-insured retentions shall be disclosed to the City and may be disapproved by the City. They shall be reduced or eliminated at the option of the City. The Contractor is responsible for the amount of any deductible or self-insured retention.

Insurance required of the Contractor or any other insurance of the Contractor shall be considered primary, and insurance of the City, if any, shall be considered excess, as may be applicable to claims obligations which arise out of the Definitive Agreement between the City and the Contractor.

Workers Compensation Coverage

The Contractor shall purchase and maintain workers compensation insurance for all workers compensation obligations imposed by state law and with employers liability limits of at least $100,000 each accident and $100,000 each employee/$500,000 policy limit for disease, or a valid certificate of exemption issued by the State of Florida, or an affidavit in accordance with Chapter 440, Florida Statutes.

The Contractor shall also purchase any other coverages required by law for the benefit of employees.

General, Automobile and Excess or Umbrella Liability Coverage

The Contractor shall purchase and maintain coverage on forms no more restrictive than the latest editions of the commercial general liability and business auto policies of the insurance services office.

Minimum limits of $1,000,000 per occurrence for all liability must be provided, with excess or umbrella insurance making up the difference, if any, between the policy limits of underlying policies (including employers liability required in the workers compensation coverage section) and the total amount of coverage required.

General Liability Coverage - Occurrence Form Required

Coverage A shall include bodily injury and property damage liability for premises, operations, products and completed operations, independent firms, contractual liability covering this agreement, contract or lease, broad form property damage coverages, and property damage resulting from explosion, collapse or underground (x,c,u) exposures.

Coverage B shall include personal injury.

Coverage C, medical payments, is not required.

The Contractor firm is required to continue to purchase products and completed operations coverage, at least to satisfy this agreement, contract or lease, for a minimum of three years beyond the City's acceptance of renovation or construction projects.

Business Auto Liability Coverage

Business auto liability coverage is to include bodily injury and property damage arising out of ownership, maintenance or use of any auto, including owned, non-owned and hired automobiles and employee non-ownership use.

Excess or Umbrella Liability Coverage

Umbrella liability insurance is preferred, but an excess liability equivalent may be allowed. Whichever type of coverage is provided, it shall not be more restrictive than the underlying insurance policy coverages. Umbrella coverage shall drop down to provide coverage where the underlying limits are exhausted.

Evidence/Certificates of Insurance

Required insurance shall be documented in certificates of insurance. If and when required by the CITY, certificates of insurance shall be accompanied by documentation that is acceptable to the CITY establishing that the insurance agent and/or agency issuing the certificate of insurance has been duly authorized, in writing, to do so by and on behalf of each insurance company underwriting the insurance coverages(s) indicated on each certificate of insurance.

New certificates of insurance are to be provided to the CITY at least 30 days prior to coverage renewals. Failure of the Contractor firm to provide the CITY with such renewal certificates may be considered justification for the CITY to terminate this agreement, contract or lease.

Certificates should contain the following additional information:

1. Indicate that The City of Lake Worth is an additional insured on the general liability policy.
2. Include a reference to the project and the Office of Purchasing number.
3. Disclose any self-insured retentions in excess of $1,000.

4. Designate The City of Lake Worth as the certificate holder as follows:

City of Lake Worth
7 N. Dixie Hwy
Lake Worth, FL 33460

5. Indicate that the CITY shall be notified at least thirty (30) days in advance of cancellation.

Receipt of certificates or other documentation of insurance or policies or copies of policies by the CITY, or by any of its representatives, which indicate less coverage than required does not constitute a waiver of the Contractor's obligation to fulfill the insurance requirements herein.

If requested by the CITY, the Contractor shall furnish complete copies of the Contractor's insurance policies, forms and endorsements, and/or such additional information with respect to its insurance as may be requested.

For commercial general liability coverage the Contractor shall, at the option of the CITY, provide an indication of the amount of claims payments or reserves chargeable to the aggregate amount of liability coverage.

Endorsements/Additional Insurance

The CITY requires the following endorsements or additional types of insurance:

Professional Liability/Malpractice/Errors or Omissions Insurance

The Contractor shall purchase and maintain professional liability or malpractice or errors or omissions insurance with minimum limits of $1,000,000 per occurrence.

If a claims made form of coverage is provided, the retroactive date of coverage shall be no later than the inception date of claims made coverage, unless the prior policy was extended indefinitely to cover prior acts.

Coverage shall be extended beyond the policy year either by a supplemental extended reporting period (erp) of as great duration as available, and with no less coverage and with reinstated aggregate limits, or by requiring that any new policy provide a retroactive date no later than the inception date of claims made coverage.

Q. DRUG FREE WORKPLACE

Consistent with the State of Florida's purchasing statutes, including Section 287.087, Florida Statutes, it is the City's policy that, whenever two or more proposals received by the City are equal with respect to price, quality, and service, a proposal received from a business that certifies that it has implemented a drug-free workplace program shall be given preference in the award process. Accordingly, Proposers are encouraged to carefully review

Exhibit B to this RFQ, "CONFIRMATION OF DRUG-FREE WORKPLACE," and, if applicable, execute that Confirmation for inclusion with their Proposals.

R. LOBBYING

All prospective Proposers are hereby cautioned not to contact any City Commissioner, member of City Staff, or any member of the Evaluation Committee (to be created by the City as described herein) after submittals are opened, nor attempt to persuade or promote the selection of their Proposals through other channels until notification that the Evaluation Committee has arrived at a recommendation of the most qualified Proposers. Until notification is received, all contacts must be channeled through the Purchasing Office. Failure to comply with these procedures will be cause for disqualification of the Proposer's Proposal.

S. CONE OF SILENCE

In accordance with the Palm Beach County Lobbyist Registration Ordinance and the City's procurement code, the City's procurement cone of silence will be in effect as of the due date for proposals in response to this RFQ. A complete copy of the City's Procurement Code is available on-line at municode.com under the City of Lake Worth's Code of Ordinances, Chapter 2, Article XIV, Sections 2-111 through 2-119. All Proposers are strongly encouraged to review the same. In summary, the cone of silence prohibits communication between certain City officials, employees and agents and any entity or person seeking to be awarded a contract (including their lobbyists and potential subcontractors). The cone of silence terminates at the time of award, rejection of all Proposals, or other action by the City to end the selection process.

T. REPRESENTATIONS, WARRANTIES, AND DISCLOSURES

Each Proposer shall submit an executed statement of Representations, Warranties, and Disclosures in the form, and having the content of, Exhibit C to this RFQ.

U. PUBLIC CONTRACTING AND ENVIRONMENTAL CRIMES CERTIFICATION

The City of Lake Worth has adopted a policy prohibiting the award of City contracts to persons, business entities, or affiliates of business entities who have not submitted a written certification to the City that they have not been convicted of bribery, attempted bribery, collusion, restraints of trade, price fixing, or violations of certain environmental laws. A Non-Conviction Certification Form is attached as Exhibit E to this RFQ for this purpose.

V. EQUAL EMPLOYMENT OPPORTUNITY

The City of Lake Worth, consistent with the provisions of Title VI of the Civil Rights Act of 1964 and the Regulations of the United States Department of Commerce (15 CFR, Part 8) issued pursuant to that Act, hereby notifies all prospective Proposers that the City will affirmatively ensure that, in any contract entered into pursuant to this RFQ, minority business enterprises will be afforded full opportunity to participate in response to this RFQ and will not be discriminated against on the grounds of race, color, creed, sex, age, or national origin in consideration for award of a Definitive Agreement pursuant to this RFQ.

W. AMERICANS WITH DISABILITIES ACT

The City of Lake Worth does not discriminate on the basis of any individual's disability status. This non-discrimination policy involves every aspect of the City's functions, including one's access to participation, employment, or treatment in the City's programs and activities. Anyone requiring reasonable accommodation for the public meetings specified in this RFQ, e.g., the public opening of proposals, public information meetings, meetings of the City's Electric Utility Advisory Board, City Commission meetings, presentations, and other public events, should contact the person named as the contact person of the City's Procurement Office at least twenty-four (24) hours in advance of any such activity, to ensure that proper arrangements for the requestor's attendance and participation can be made.

X. DISCLAIMERS AND DISCLOSURES

The information contained herein is provided solely for the convenience of Proposers. While the City has used reasonable diligence in its efforts to ensure that the information herein is as accurate as possible, it is the specific responsibility of each Proposer to assure itself that information contained herein is accurate and complete. Neither the City nor its advisors provide any assurances or warranties as to the accuracy of any information in this RFQ. Any reliance on the contents of this RFQ, or on any communications with City representatives or advisors, shall be at each Proposer's own risk. Proposers should rely exclusively on their own investigations, interpretations and analyses in connection with this matter. The RFQ is being provided by the City without any warranty or representation, express or implied, as to its content, accuracy, or completeness, and no Proposer or other party shall have recourse to the City if any information herein contained shall be inaccurate or incomplete. No warranty or representation is made by the City that any Proposal conforming to these requirements will be selected for consideration, negotiation or approval.

In its sole discretion, the City may withdraw this RFQ either before or after receiving Proposals, may accept or reject Proposals, and may accept Proposals which deviate from the non-material provisions of this RFQ. In its sole discretion, the City may determine the qualifications and acceptability of any firm or firms submitting Proposals in response to this RFQ. Following submission of a Proposal, the Proposer agrees to promptly deliver such further details, information and assurances, including, but not limited to, financial and

disclosure data, relating to the Proposal and/or the Proposer, including the Proposer's affiliates, officers, directors, principals, shareholders, partners and employees, as requested by the City. Any action taken by the City in response to Proposals made pursuant to this RFQ or in making any award or failure or refusal to make any award pursuant to such Proposals, or in any cancellation of award, or in any withdrawal or cancellation of this RFQ, either before or after issuance of an award, shall be without any liability or obligation on the part of the City or the City's advisors.

Any Proposer who submits a Proposal in response to this RFQ fully and expressly acknowledges all the provisions of this section titled DISCLAIMERS AND DISCLOSURES and agrees to be bound by the terms hereof. Any Proposal submitted pursuant to this RFP is at the sole risk and responsibility of the party submitting such Proposal.

II. SUBMITTAL OF DOCUMENTS - FORM AND CONTENT OF PROPOSALS

A. NUMBER AND FORMAT OF COPIES TO BE SUBMITTED; SUBMITTAL TO BE SEALED AND MARKED

Proposers desiring to provide the Scope of Services sought by the City through this RFQ shall **submit one (1) original paper copy, five (5) additional paper copies, and one (1) electronic copy** of their complete Proposals containing all of the requested documents and information set forth below by **12:00 P.M. (12:00 Noon) Eastern Daylight Time on Monday, July 7, 2014.** Electronic copies should preferably be in Adobe Acrobat PDF format, but other industry standards will be considered. Electronic copies should be submitted on a CD or DVD, or other industry standard electronic storage device with a USB connection.

The above-described copies, including the paper copies and the electronic copy, shall be submitted in one sealed package, clearly marked on the outside as follows: "Sealed Proposal in Response to City of Lake Worth RFQ # ____-14-____". The complete submittal package shall be delivered to the following address:

City of Lake Worth Procurement Office
Second Floor, Lake Worth City Hall
7 North Dixie Highway
Lake Worth, Florida 33460

Original letters of interest shall be signed by an authorized representative of the Proposer. All information requested must be submitted. Failure to submit all information may delay evaluation of the qualifications. Submittals that are substantially incomplete or that lack key information may be rejected by the City at its discretion.

B. DOCUMENTS TO BE SUBMITTED

Each Proposer shall submit the following documents and documentation as the Proposal that the Proposer wishes the City to consider in this RFQ process.

1. Letter of Interest
2. Statement of Qualifications & Proposal
3. Exhibit A PROPOSER INFORMATION & SIGNATURE PAGE
4. Exhibit B CONFIRMATION OF DRUG-FREE WORKPLACE
5. Exhibit C REPRESENTATIONS, WARRANTIES, AND DISCLOSURES
6. Exhibit D SWORN STATEMENT RELATING TO PUBLIC ENTITY CRIMES
7. Exhibit E FORM FOR CERTIFICATION RELATING TO PUBLIC CONTRACTING AND ENVIRONMENTAL CRIMES

C. CONTENT OF LETTER OF INTEREST

Each Proposer shall submit a Letter of Interest providing the following information:

1. The Proposer's legal name and business address.

2. Express declaration that the Proposer wishes to be considered for award of a Definitive Agreement to perform the Scope of Services described in this RFQ.

3. A Maximum Not To Exceed Price for which the Proposer will commit to perform the Scope of Services described in this RFQ within the time set forth herein. The Proposer may, but is not required to, submit a listing of hourly rates; the City intends to negotiate hourly rates and cost reimbursement provisions in the Definitive Agreement, and the City may also negotiate for a lower Maximum Not To Exceed Price than that quoted in the Proposer's Proposal.

4. A statement, confirmed by the signature of an authorized principal or officer of the Proposer, that the Proposer is willing and able to perform the Scope of Services described in this RFQ, within the time set forth herein, at a total cost to the City that is no greater than the Proposer's Maximum Not to Exceed Price.

5. A statement, also confirmed by the signature of an authorized principal or officer of the Proposer, that the Proposer will, for additional consideration to be negotiated if and when necessary and appropriate, provide additional services related to the Proposer's analysis of the Economic & Financial Value of the City's Electric Utility System. Such additional services may include making up to 3 additional presentations to meetings of the Electric Utility Advisory Board ("EUAB"), and up to 3 additional presentations to the City Commission or to public workshops regarding the City's Electric Utility System, or providing support in connection with future proceedings or negotiations. (In this context, "additional presentations" refers to presentations or testimony to meetings after those contemplated as being made to the EUAB and the City Commission in or about December 2014, at the conclusion of the Contractor's completion of the Economic & Financial Value analysis of the City's Electric Utility System.)

D. CONTENT OF STATEMENT OF QUALIFICATIONS & PROPOSAL

Each Proposal shall include the items and content listed below.

1. A description of the Proposer, including the Proposer's form of business entity (corporation, partnership, limited partnership, limited liability company, individual, sole proprietorship, or other), and also including the names of the Proposer's principals and officers.

2. Proof of proper State of Florida business licensure. If the Proposer is a registered business entity in Florida, please submit a statement confirming that the Proposer is in good standing with the Division of Corporations, Florida Department of State. If the Proposer is not a registered business entity in Florida, please submit documentary evidence confirming that the Proposer is authorized to transact business in Florida.

3. A description of the Proposer's background, size, and general staffing levels, including information for the Proposer organization stating how many total employees work for the Proposer at any time, including full-time, part-time, temporary, and seasonal employees, and also including an indication of how many subcontractors work for the Proposer, on average.

4. A description of any changes in the mode of conducting business that either the Proposer, or the principals who will be dedicated to performing the Scope of Services described herein, have made within the past three (3) years. Such changes should include any mergers, acquisitions, consolidations, changes of employment by principals (from one firm to another), downsizing, or bankruptcy proceedings.

5. Principals and Key Personnel. Specific listing of the principals and other key personnel (including, without limitation, support staff, junior technical or analytical employees, subcontractors, and others) who will be dedicated to performing the Scope of Services, including the relevant experience of each principal and other key personnel listed. At a minimum, include a current resumé or curriculum vitae for each principal who will be dedicated to performing the Scope of Services; resumés or curriculum vitae for other, non-principal key personnel are desirable but not required.

6. Professional Licenses and Certifications. For each principal or other key personnel, include information regarding such person's professional licenses and certifications, e.g., Professional Engineer or Certified Public Accountant licenses, including the state or states in which each person is licensed, and license numbers; certification as a Certified Government Financial Manager; certification as a Certified Public Finance Officer; certification as an Accredited Member or as an Accredited Senior Appraiser by the American Society of Appraisers; or other certifications or licenses that the Proposer believes are relevant to the Proposer's ability to perform the Scope of Services.

7. Approach to Scope of Work. Provide a detailed description of the approach, or approaches, that the Proposer intends to use to perform the Scope of Services requested by the City.

8. Time and Task Schedule and Person-Hours Budget

Background. The City anticipates executing the Definitive Agreement for the services sought through this RFQ by September 4, 2014, and the City expects the work to be substantively and substantially complete by December 8, 2014. (Reasonable allowances will be made for final editorial changes and non-substantive revisions between December 8 and the final presentation to the City Commission in December 2014.) This schedule is necessary to support other decisions that the City must make relative to its electric utility operations, and accordingly, **any variance to this schedule that reflects a substantive completion date later than December 8, 2014, will be disqualified**. Proposers should also expect that the Definitive Agreement for the contemplated services will include severe financial penalties if the work is not substantively and substantially complete by December 8, 2014.

The Proposer's Time and Task Schedule and Person-Hours Budget should identify major components (tasks) of the work effort that the Proposer intends to apply to perform the Scope of Services, and may also identify more detailed components of the work effort. For each work component or task identified, the Proposer should indicate:

a. the estimated person-hours of each principal and other key personnel with respect to each task;

b. the total person-hours that the Proposer estimates will be required to complete each such task; and

c. the projected date on which each task will be completed.

9. A Maximum Not To Exceed Price for which the Proposer will commit to perform the Scope of Services described in this RFQ within the time set forth herein. The Proposer may, but is not required to, submit a listing of hourly rates; the City intends to negotiate hourly rates and cost reimbursement provisions in the Definitive Agreement, and the City may also negotiate for a lower Maximum Not To Exceed Price than that quoted in the Proposer's Proposal.

10. Listing of similar projects that the Proposer, or current principals of the Proposer, have completed over the past five (5) years, including the services provided and the location of the electric utility facilities or systems for which an economic or financial value analysis was provided. As applicable and available, please include citations, titles and dates of reports, information as to how the Proposer's work product can be accessed via the internet, and any other information that would assist the City in accessing and reviewing relevant work products of the Proposer or its principals. The requested listing should include any legal proceedings, including arbitrations, civil trials, eminent domain proceedings, or other proceedings in which the Proposer's estimate of the economic or financial value of utility facilities or a system was at issue.

11. Variances. While the City allows Proposers to specify any desired variances to the RFQ terms, conditions, and specifications, **other than variances to the Scope of Services, which will not be acceptable,** the number and extent of variances taken will be considered in determining the Proposer who is most advantageous to the City. **Proposers should note specifically that the date set forth herein for substantive and substantial completion of the Scope of Services, December 8, 2014, has been established by the City to accommodate and facilitate other decisions that the City expects to make in connection with its Electric Utility System, and accordingly, any proposed variance that materially deviates from this date will result in the Proposal being disqualified**.

12. References. A list of references from past or current clients for whom the Proposer, or its principals who will be dedicated to performing the Scope of Services herein, have performed work that is similar to that requested in the Scope of Services herein. The information provided should include the name of the client, the names of individuals familiar with the Proposer's (or principal's) work for the client, and telephone numbers, mailing addresses, and e-mail addresses for such contact persons.

13. Addenda. The Proposal should include all addenda issued in connection with this RFQ, if practicable. If a Proposal does not include the addenda, the City will accept the Proposer's warranty, set forth in Exhibit C herein, that the Proposer understands and agrees to be bound by any and all such addenda.

14. Each Proposer shall list any lawsuits, including case number and venue, in which either the Proposer firm or any principals of the firm, or any subcontractors whom the Proposer intends to assign to work on the Scope of Services, has been involved relative to services performed or that the Proposer was alleged to have failed to perform over the last five (5) years.

15. Any additional information that the Proposer believes would assist the City in evaluating the Proposer's Proposal.

III. SCOPE OF SERVICES

A. INTRODUCTION

In summary, the City of Lake Worth seeks to obtain thorough, detailed professional analyses of the economic and financial value to the City and its citizens of continuing to operate its Electric Utility System as a going business concern for the indefinite future. This request arises because, as a matter of public policy and good government, the City asks the question whether it should remain in the electric business, or whether it should exit the electric business.

The City Electric Utility System has substantial value to the City in many respects, but the requested analyses are directed to the System's economic and financial value to the City. Like the electric utility systems owned and operated by most or all of the 35 Florida municipalities that operate their own electric systems, the Lake Worth Electric System generates revenues greater than the short-term and long-term costs that it incurs to own and operate the Electric Utility System, and those revenues are used to support general City government functions. In summary, the City receives revenues from the sale of electric service (primarily at retail, but also including some wholesale revenues), and from the public service tax that it imposes within the City limits pursuant to Section 166.231, Florida Statutes. Proposers should be aware that the City has adopted Ordinance No. 2013-40, which provides that "the City of Lake Worth, Florida, is committed to a five (5) year plan to lower the City's electric rates to attain parity with rates charged by FPL for similar services." The City also incurs the same types of costs that all electric utilities incur. These include (a) the costs to own, operate, and maintain power plants, transmission and distribution facilities, costs for purchasing wholesale power, and costs to service its customers' accounts (billing, collection, and customer assistance), and (b) long-term costs such as debt service, long-term contractual obligations for purchased power, and long-term costs associated with pension liability for both current employees and retirees.

If the City were to sell its Electric System, the assumption is that a Purchasing Utility would buy all of the City's electric facilities and assets, take over the responsibility to serve all of the City's electric customers, and either assume all of the City's short-term and long-term liabilities associated with the Electric System or pay the City an amount sufficient to pay off all foreseeable liabilities; the City would also expect to receive revenues from franchise fees that would be collected and remitted by the Purchasing Utility, from the public service tax on sales to customers within the City limits, and from property taxes paid by the Purchasing Utility, assuming that the Purchasing Utility was not exempt from such taxes. Revenues and costs are discussed in more detail below.

Because the City relies on its Electric System as a revenue source, the ultimate answer to the City's question – the value of the System to the City whether it remains in or exits the electric business – must be informed by considerations of how the City would fund general City government functions and activities if it were to exit the business, and this question can be formulated as follows:

Including providing funds that are sufficient to pay all operating costs and all costs associated with long-term contractual obligations and other liabilities, what is the value to the City of Lake Worth of continuing to own and operate its Electric Utility System in terms of the contributions that the surplus revenues from the System makes, and is reasonably foreseeable to make, to support City government functions and activities?

Alternately, the question may be formulated as follows:

What minimum price would the City have to receive, and under what terms and conditions could a sale of the City's Electric Utility System be made, that would leave the City in a better financial situation – in terms of being able to support City government – following the sale as it would be by continuing to operate and fully upgrade the System by a capital investment in generation facilities? Additionally, what is the net present value to the City?

Because the City necessarily plans to exist indefinitely, the City believes that the time horizon for the requested analyses must be at least 50 years, and that analyses for both 50 years and 100 years would be appropriate.

The City desires that the analyses of the Economic & Financial value of the City's Electric Utility System be stated as of January 1, 2017, and also as of January 1, 2018, and as of January 1, 2019.

The scope of services may be expanded after completion of the initial written report and presentations to include participation in future City activities relating to the future of the City's Electric Utility System. The City anticipates that such potential expansion of scope will be addressed in the Definitive Agreement between the City and the Contractor, e.g., by agreement on the scope of such services and the hourly rates at which the Contractor would be compensated if the City were to desire to engage the Contractor to provide such services. (Proposes should not include either hours or costs for such expanded activities in their Proposals.)

B. PRODUCTS AND SERVICES

1. Analyses

The City desires analyses of the value to the City of continuing to own and operate its Electric Utility System. The questions stated above can be approached from at least two different directions.

a. First, if the analysis assumes that the City would remain in the electric business, the analysis would address the net present value (NPV) of the difference between the System's revenues and all costs of owning and operating the System, including all long-term liabilities, again assuming that Electric System revenues are sufficient to pay all short-term and long-term costs. This analysis should consider anticipated customer growth equivalent to

national and state projections, potential debt, rate parity, and revenue sufficiency to still provide the surplus revenues to support City government.

b. If the analysis assumes that the City were to sell the System, the analysis would address the NPV of the difference between the surplus funds that the City Electric System would generate to support the City, under continuing City ownership and management, and the funds (franchise fees, public service taxes, and property taxes, if applicable) that would be generated by the Purchasing Utility, assuming that the Purchasing Utility would assume or otherwise fully guarantee all of the City's liabilities associated with the Electric Utility System.

c. If the analysis contemplated by subparagraph b above does not assume that the Purchasing Utility will assume or fully guarantee all of the City's liabilities, then the analysis must address the sum of the NPV of the surplus funds that the Electric System generates to support the City plus the NPV of the amount that the City would have to receive in order to be able to cover all of its short-term and long-term liabilities.

2. Written Report

The Contractor's estimates of the economic and financial value of the Electric System to the City must be fully documented in a written report submitted to the City by the Contractor. The written report must include all assumptions, supporting analyses and calculations, source data, and other supporting materials upon which the estimates are based.

3. Presentations to Electric Utility Advisory Board and City Commission

The Contractor will also be expected to present the Economic & Financial Value analyses, including detailed results, to meetings of the Electric Utility Advisory Board and the City Commission. Those meetings are expected to be held on or about December 15-16, 2014.

4. Additional Services

The City may, in the future, require the professional services of the Contractor in connection with matters relating to the value of the City's Electric Utility System. Such additional professional services may include additional presentations to the EUAB or the City Commission beyond those presentations expected to be made in December 2014, and potentially support of negotiations relating to a sale of the system to another entity, such as another utility system. Such additional services should not be included in the Proposer's Time and Task Budget or in the Maximum Not To Exceed Price. However, the City desires that the Contractor commit to providing such services as they may become necessary in the future, and the City expects to negotiate hourly rates and appropriate terms and conditions for such services as part of the Definitive Agreement.

C. DESCRIPTION OF CITY OF LAKE WORTH

The City of Lake Worth is a municipality and political subdivision of the State of Florida, duly organized and existing under the laws of that State. The City is governed by a

duly elected City Commission composed of five (5) members, a Mayor, Vice Mayor, and three District Commissioners, each of whom are elected to two-year terms. The City is located in Palm Beach County, Florida. The current population of the City is approximately 37,000 persons. Geographically, the City comprises approximately 7 square miles and includes a beach on the Atlantic Ocean as well as frontage on the body of water known as Lake Worth.

The City owns and operates an Electric Utility System, as well as water and wastewater utility systems. The Electric Utility System is subject to ultimate decision-making governance by the City Commission, which meets between two and four times per month, as required by the needs of the City. The City Commission regularly receives input directly from interested citizens, and also from the Electric Utility Advisory Board (EUAB), a standing board consisting of citizens appointed by the City Commission to investigate and consider electric utility issues and to provide their advice to the Commissioners. The EUAB normally meets monthly.

The City's total expenditure budget for Fiscal Year 2014 is $196,249,345. The total budget for the Electric System for FY 2014 is approximately $60.4 million. The City's FY 2014 budget indicates that the Electric System will contribute approximately $4.1 million to the City's General Fund as a Contribution from Enterprise, which is the equivalent of a Payment in Lieu of Taxes (PILOT), and that the Electric System will also contribute approximately $3.1 million toward general City administrative costs. Additionally, the City collects public service taxes on electric utility service pursuant to Section 166.231, Florida Statutes. The City anticipates that it would continue to collect the public service tax even if the Electric System were sold to another entity. (If so, the City expects that the public service tax percentage would remain constant at its present level of 10 percent, but this rate would have to be applied to the assumed revenues of the purchasing utility.)

The City has certain pension liabilities for current employees and retirees. The City estimates that the pension liability for employees and retirees of the Electric System represents approximately 50 percent of the total. As of October 1, 2011, the City had an Unfunded Accumulated Actuarial Liability of approximately $41 million to $45 million, depending on the assumptions used in the actuarial analyses; under the current amortization schedule, this Unfunded Accumulated Actuarial Liability is projected to be fully amortized (decline to zero) in 2041.

As a matter of public policy, for the purpose of its consideration of whether to remain in or exit the electric business, the City believes that all other tax rates and revenue sources should be assumed to remain constant, such that the City will get an accurate assessment of the economic and financial value of the Electric System to the City.

D. DESCRIPTION OF LAKE WORTH ELECTRIC UTILITY SYSTEM

1. History

The City of Lake Worth was formally incorporated in 1912. The first electric franchise was granted to the Lake Worth Water, Light, and Ice Company in 1913, and the first "turning on of the lights" took place on May 18, 1914. Thus, this RFQ process coincides precisely with the centennial of the Lake Worth electric system. The City purchased both the water and light systems in 1916. The first electric meters were installed in 1919, and some of those are still in service.

2. Overview of Customers and Load Characteristics

As Lake Worth has grown, so has its Electric Utility System. The City now provides service to approximately 25,000 customer accounts (meters). The City's 2014 Net Energy for Load is estimated to be approximately 440,000 megawatt-hours (MWH), and is expected to grow modestly over the foreseeable future, to approximately 475,000 MWH in 2023. In terms of energy sales, approximately 57 percent are Residential, approximately 22 percent are Commercial, and approximately 1 percent are for Street & Highway Lighting. The City's maximum annual peak demands are estimated to be approximately 88 megawatts (MW) in 2014, and to increase to approximately 100 MW in 2023.

3. Overview of Electric System Revenues and Expenses

As summarized above, the City of Lake Worth has operated its Electric Utility System as a "going business concern" for nearly a century. Over time, like most, if not all, other Florida municipal utility systems, the City has used a reasonable amount of the revenues generated from its electric operations to supplement its general budget. The current general fund contribution is approximately $4.1 million per year. The Electric System also contributes approximately $3.1 million per year to general City administrative costs; this administrative cost contribution is based on an allocation formula, but the Economic & Financial Value analyses will have to address whether any of the general City administrative costs could be avoided or discontinued if the City were to sell its Electric System.

Total Electric System revenues include retail revenues and wholesale revenues. Retail revenues include both charges for the sale of electricity to end-use customers and "service charges," such as connection fees, reconnection fees, late charges, and the like. System expenses include: contract payments for the purchase of wholesale power; costs incurred by the City to own and operate its own fleet of power plants; certain fuel supply costs; the costs of bulk transmission service; costs incurred to own and operate its transmission and distribution facilities; costs to service customer accounts, including metering and billing costs; engineering costs; depreciation; and debt service costs. The contributions to the City's general fund and contributions to cover general City administrative costs are treated as expenses in the Electric System budget.

4. Generation Assets

The City's generation assets include approximately 90 MW of City-owned generating units, of which 9.9 MW is only available for emergency operations. The City's generation assets also include generation entitlements to approximately 20.6 MW (including associated energy) of the output of the St. Lucie 2 nuclear power plant, which is jointly owned by the Florida Municipal Power Agency (FMPA) and Florida Power & Light Company (FPL) and operated by FPL; and to approximately 10.0 MW (including associated energy) of the output of the Stanton I coal-fired power plant, which is jointly owned by FMPA, the Orlando Utilities Commission (OUC), and the Kissimmee Utility Authority (KUA), and operated by OUC. The City's generation entitlements to the St. Lucie plant's output arise through a number of contracts and amendments, the chief of which are the St. Lucie Power Sales Contract between FMPA and Lake Worth dated June 1, 1982, as amended, and the St. Lucie Project Support Contract dated as of June 1, 1982, as amended. The City's generation entitlements to the Stanton I unit's output arise through certain contracts, as amended, the chief of which are the Stanton I Power Sales Contract between FMPA and Lake Worth dated January 16. 1984, and the Stanton I Project Support Contract dated January 16, 1984.

The City is also a party to similar power supply contracts for the output of the Stanton II coal-fired unit operated by OUC. The City's rights and obligations with respect to the Stanton II unit's output have been assigned to the Kissimmee Utility Authority (KUA); however, the City remains contingently liable under those agreements, in the event that KUA were to default.

In February 2013, the City entered into that certain INTERLOCAL AGREEMENT FOR PURCHASE AND SALE OF ELECTRIC ENERGY AND CAPACITY AND ASSET MANAGMENT SERVICES BETWEEN THE CITY OF LAKE WORTH, FLORIDA AND ORLANDO UTILITIES COMMISSION (the "OUC-COLW PPA"), pursuant to which OUC provides Wholesale Electric Service and Asset Management Services to the City. Pursuant to the OUC-COLW PPA, OUC will supply wholesale electric energy and wholesale electric capacity to the City for a minimum initial term of 3 years, from January 1, 2014 through December 31, 2016. The City has the option to extend its purchases from OUC for 2 additional years, one year at a time, i.e., for the period January 1-December 31, 2017, and for the period January 1-December 31, 2018. Unless amended by the written agreement of both Parties, the OUC-COLW PPA will terminate no later than December 31, 2018. For purposes of the Economic & Financial Value analyses sought through this RFQ, however, the City believes that the Contractor should assume that any purchase of the City Electric System should occur simultaneously with the termination of the OUC-COLW PPA.

Detailed information regarding the City's generation assets, including all of the relevant contracts and amendments relating to the City's entitlements to the output of the St. Lucie 2 nuclear unit and the Stanton 1 unit, will be made available on the City's website. A redacted version of the OUC-COLW PPA will also be made available on the City's website. The OUC-COLW PPA contains certain information that OUC has designated as trade secret information; to the extent necessary to support the Contractor's analyses of the Economic & Financial Value of the City's Electric Utility System, the City will, subject to the execution of an acceptable Non-Disclosure Agreement protecting OUC's trade secret information, make

an unredacted copy of the PPA available for review by the Contractor at the City's offices, subject to the Contractor's execution of a confidentiality agreement.

5. Transmission Assets

The City is interconnected to the Florida bulk power supply grid at the Hypoluxo Substation, which is located in the western part of the City and which is owned by the City of Lake Worth and operated by FPL. The City owns and operates 10.09 circuit miles of 138 kV transmission lines. The City also obtains network transmission service from FPL pursuant to a Service Agreement for Network Integration Transmission Service between FPL and Lake Worth, and also pursuant to a Contract for Interconnected Operations between FPL and Lake Worth.

6. Distribution Assets

The City owns and operates approximately 199 miles of distribution lines. Approximately 101 miles of those are operated at 26 kV, and approximately 98 miles are operated at 4 kV.

The City owns and maintains eleven (11) distribution substations. The City also owns the Hypoluxo Substation, which interconnects the City's Electric System to FPL's transmission system. FPL operates the Hypoluxo Substation pursuant to an agreement with the City.

IV. EVALUATION, SELECTION, NEGOTIATIONS, AND AWARD

This section of the RFQ sets forth the RFW timetable and descriptions of the major steps and procedures that the City anticipates taking in reaching its decision to select a Contractor and execute a Definitive Agreement for the Scope of Services.

A. GENERAL

This section describes the timetable for this RFQ process and the major steps in that process, including: preliminary evaluation and ranking of Statements of Qualifications and Proposals, the selection of a "short list" of Proposers who will be invited to be interviewed and make presentations to the City, the City Commission's decision on the ranking of Proposers, the negotiations for a Definitive Agreement, beginning with the highest-ranked Proposer, and the Definitive Agreement.

B. RFQ TIMETABLE

The anticipated schedule for this RFQ and contract approval is as follows:

- Advertisement of RFQ — June 16, 2014
- Final Date for Proposers' Questions/Requests — June 25, 2014 at 5:00 P.M.
- City Responses to Questions – continuing, responses as quickly as feasible
- Final City Responses to Questions — July 2, 2014 at 5:00 P.M.
- Proposals Due — July 7, 2014 at 12:00 P.M.
- Initial Evaluation Committee Meeting — July 7, 2014
- Presentations to EUAB & City Commission — July 15-16, 2014
- Evaluation Committee Meeting — July 24-25, 2014
- Negotiations with Highest-Ranked Proposer — July 28-31, 2014
- Contingency: Additional Negotiations — August 4-8, 2014
- Recommendation to City Commission — August 12, 2014
- Proposal Selection by City Commission — August 19, 2014
- Contract Execution — September 4, 2014

The City reserves the right to amend the anticipated schedule as it deems necessary.

C. PRELIMINARY EVALUATION OF PROPOSALS

The City intends to appoint an Evaluation Committee to evaluate the Proposals submitted by all Proposers. The Evaluation Committee will convene for a public meeting to identify qualified Proposals, which will be those substantially complete Proposals that are (a) submitted by Proposers who are capable of performing the Scope of Services and (b) not disqualified because of any criteria set forth herein, e.g., unacceptable proposed variances, conflicts of interest, and the like. The members of the Evaluation Committee will be charged with individually evaluating the responses prior to the meeting.

D. "SHORT LIST," INTERVIEWS, AND PRESENTATIONS BY PROPOSERS

The City intends to invite all qualified Proposers to make presentations to the Evaluation Committee and the EUAB, and, assuming that scheduling can be managed, to the City Commission.

E. SELECTION FOR NEGOTIATIONS

Following the anticipated interviews and presentations, the Evaluation Committee will again meet, in public, to evaluate and rank the proposals on the basis of the following criteria.

	Evaluation Criteria Score Sheet:	Weight
1	Ability, capacity and skill of personnel who will be assigned to perform the contract and provide the work products and services required.	55
2	Relevant experience of proposer's firm and personnel to be assigned to the project in Florida.	20
3	Time and Task Budget and Maximum Not To Exceed Price.	20
4	Variances: As noted in the body of this RFQ, variances to certain provisions of the RFQ, including variances to the Scope of Services, are unacceptable, such that a variance proposed to such provisions will result in disqualification of the Proposal. Proposals having zero variances will get full points; other proposed variances will be evaluated on the basis of whether they would, in the Evaluation Committee's estimation, diminish the value of the proposal to the City.	5

Each Proposal will be evaluated individually and in the context of all other proposals. Proposals must be fully responsive to the requirements described in this RFQ and to any subsequent requests for clarification or additional information made by the City through

written addenda to this RFQ. Proposals failing to comply with the submission requirements, or those unresponsive to any material part of this RFQ, may be disqualified. There is no obligation on the part of the City to award the Definitive Agreement to the lowest priced Proposer, and the City reserves the right to award the Definitive Agreement to the Proposer submitting the Proposal that is most advantageous to, and in the best interests of, the City and its citizens. The City shall be the sole judge of the Proposals and the resulting Definitive Agreement that is in the City's best interests, and the City's decision shall be final.

At the public meeting, and after making its evaluations, the Evaluation Committee will make recommendations to the City Commission of the highest-ranked Proposer, the next-highest-ranked Proposer, and the following next-highest-ranked Proposer, assuming that there are 3 qualified Proposers. The Evaluation Committee may identify and rank additional Proposers through this process.

At a subsequent public meeting, the City Commission will decide on the Proposers, and the ranking of those Proposers, with whom the City's designated negotiation team will seek to negotiate the Definitive Agreement for the performance of the Scope of Services. The City Commission is not bound by the recommendation of the Evaluation Committee and the City Commission may deviate from the Evaluation Committee's recommendations in determining the proposal that is most advantageous to and in the best interests of the City and its citizens.

F. NEGOTIATION AND AWARD; DEFINITIVE AGREEMENT

The City will designate a negotiating team, which is expected to consist of the City Manager, the City Utilities Director, the City Finance Director, a representative designated by the City Attorney, and a representative of the EUAB; the City Commission may designate additional members of the negotiation team. The City will first attempt to negotiate the terms and conditions of a Definitive Agreement, including the fee for the services to be rendered, with the highest-ranked Proposer. If the City and the highest-ranked Proposer cannot agree on satisfactory terms and conditions for the desired Definitive Agreement, the City reserves the right to terminate negotiations with the highest-ranked Proposer and move to the next-highest-ranked Proposer to commence negotiations. Negotiations may continue in this process until the City is able to enter into a Definitive Agreement with a Proposer that best meets the needs of the City.

The Definitive Agreement must be approved by the City Commission. The Definitive Agreement will commence upon its execution by the City.

Each fiscal year of the Definitive Agreement, and any renewals or extensions, will be subject to the availability of funds lawfully appropriated for its purpose by the State of Florida and the City of Lake Worth. The City need not include a lack of appropriations provision in the resulting contract to avail itself of such legal right.

The Contractor's hourly rates, which will be negotiated after the Proposals are ranked and the highest-ranked Proposers are identified, shall remain firm at least through December 31, 2015. Escalation rates beyond that date will be negotiated in the Definitive Agreement.

G. DEFINITIVE AGREEMENT SUBJECT TO CITY'S PROCUREMENT CODE

Award(s) resulting from this solicitation shall be subject to the provisions of THE CITY OF LAKE WORTH CODE OF ORDINANCES, "PROCUREMENT CODE OF THE CITY OF LAKE WORTH", CHAPTER 2, ARTICLE XIV, SECTIONS 2-111 THROUGH 2-119.

For questions and additional information, contact:

PROCUREMENT

Kari Hansen
Purchasing Agent
7 North Dixie Highway
Lake Worth, FL 33460
Tel: (561) 586-1674
E-mail: KHansen@LakeWorth.org

EXHIBIT "A"

PROPOSER INFORMATION AND SIGNATURE PAGE

(This page must be completed and inserted in the First Section)

RFQ ___-14-____

Company Name: _____

Authorized Signature: _____

Signature Print Name

Title: _____

Corporate Address: _____

Street

_____

City State Zip Code

Telephone: _____ Fax: _____

Email Address: _____

Remit To Address:

_____

Street

_____

City State Zip Code

Web Site (if applicable:_____

Federal ID No.:_____ This is a requirement of every Proposer.

EXHIBIT "B"

CONFIRMATION OF DRUG-FREE WORKPLACE**

Consistent with the State of Florida's purchasing statutes, including Section 287.087, Florida Statutes, it is the City's policy that, whenever two or more proposals are equal with respect to price, quality, and service which are received by any political subdivision for the procurement of commodities or contractual services, a proposal received from a business that certifies that it has implemented a drug-free workplace program shall be given preference in the award process. In order to have a drug-free workplace program, a business shall:

(1) Publish a statement notifying employees that the unlawful manufacture, distribution, dispensing, possession, or use of a controlled substance is prohibited in the workplace and specifying the actions that will be taken against employees for violations of such prohibition.

(2) Inform employees about the dangers of drug abuse in the workplace, the business's policy of maintaining a drug-free workplace, any available drug counseling, rehabilitation, and employee assistance programs, and the penalties that may be imposed upon employees for drug abuse violations.

(3) Give each employee engaged in providing the commodities or contractual services that are being provided pursuant to a contract with the City a copy of the statement specified in subsection (1).

(4) In the statement specified in subsection (1), notify the employees that, as a condition of working on the commodities or contractual services that are under contract to the City, the employee will abide by the terms of the statement and will notify the employer of any conviction of, or plea of guilty or nolo contendere to, any violation of Chapter 893. Florida Statutes, or of any controlled substance law of the United States or any state, for a violation occurring in the workplace no later than 5 days after such conviction.

(5) Impose a sanction on, or require the satisfactory participation in a drug abuse assistance or rehabilitation program if such is available in the employee's community by, any employee who is so convicted.

(6) Make a good faith effort to continue to maintain a drug-free workplace through implementation of this section.

As the person authorized to sign this statement on behalf of _____, I certify that _____ complies fully with the above requirements.

_____ _____
Authorized Representative's Signature Date

_____ _____
Name: Position:

**** If this form is not returned, the City will assume the Proposer has not implemented a drug-free workplace program.**

Exhibit "C"

REPRESENTATIONS, WARRANTIES, AND DISCLOSURES

RFQ ___-14-____

STATE OF _____}
} SS:
COUNTY OF _____}

I am an officer of the Proposer firm, named below, submitting its Statement of Qualifications as part of the Proposer firm's response to an RFQ, and I am authorized to make the following Representations, Warranties, and Disclosures on behalf of the Proposer. I certify or affirm that to the best of my knowledge and belief, the following statements are true:

1. Proposer agrees that its Proposal may become part of any contract entered into between the City and the Proposer.

2. There are no actual, apparent or potential conflicts of interest between the Proposer or any sub-consultants or subcontractors and the interests of the City of Lake Worth, that are present or could develop with respect to the Scope of Services set forth in the RFQ and the City, any parties to this RFQ solicitation, or any third parties with whom or with which the Proposer has any business relationship. If there are any such conflicts, they are listed on a separate addendum to this Exhibit C. For purposes of this representation and warranty, the Proposer understands that the Proposer must disclose any relationships, whether past, present, or future, with any entity that might have an interest in the Proposer's estimate of the economic and financial value of the City's Electric Utility System to the City being either greater than or less than a fully objective measure of that value. The Proposer also understands that the Proposer must also disclose any engagements, whether past, present, or future, with any investor-owned utility that has acquired, or that has sought to acquire, any municipal or cooperative utility system anywhere in the United States.

3. Submittal of Proposer's Proposal is made without connection, coordination, or cooperation with any persons, company or party making another submittal, and that it is in all respects fair and in good faith without collusion or fraud.

4. All principals and officers of the Proposer are named in the Proposal, and no person(s) other than those named therein has (have) any interest in the Proposal or in the anticipated contract.

5. The Proposer understands and agrees to all elements of the Proposal unless otherwise indicated or negotiated, and that the Proposal may become part of, and incorporated by reference into, any contract entered into between the City and the Proposer.

6. Proposer has not filed for bankruptcy in the past five (5) years.

7. Neither Proposer nor any of Proposer's principals have been convicted of or indicted for a felony or fraud.

8. Neither the Proposer, nor any parent corporations, affiliates, subsidiaries, members, shareholders, partners, officers, directors or executives thereof are presently debarred, proposed for debarment or declared ineligible to bid or participate in any federal, state or local government agency projects and are not listed on the Florida convicted vendor list.

9. Pursuant to Section 287.133, Florida Statutes, a person or affiliate who has been placed on the convicted firm list maintained by the State of Florida may not submit a proposal to the City of Lake Worth for 36 months following the date of being placed on the convicted firm list. Proposer certifies that submittal of its proposal does not violate this statute.

10. The Proposer understands and agrees to be bound by any and all addenda issued by the City in connection with this RFQ.

11. Proposer warrants that it has not employed or retained any company or person, other than a bona fide employee working solely for Proposer, to solicit or secure an award under this RFQ and that it has not paid or agreed to pay any person, company, corporation, individual, or firm, other than a bona fide employee working solely for Proposer, any fee, commission, percentage, gift, or any other consideration contingent upon or resulting from an award.

12**. Proposer certifies that the "Maximum Not To Exceed Price" as proposed is accurate, complete, and current at the time of submission of the Proposer's response to the RFQ, and that such Maximum Not To Exceed Price reflects hourly rates that are no higher than those charged to the Proposer's other customers for the same or substantially similar services in the Southeast Region of the United States during the preceding twelve (12) month period.**

13. Proposer certifies to the best of its knowledge and belief that no funds or other resources received in connection with an award of a contract from this RFQ will be used

directly or indirectly to influence legislation or any other official action by the Florida Legislature or any state agency.

14. Proposer recognizes and agrees that the City will not be responsible or liable in any way for any losses that the Proposer may suffer from the disclosure or submittal of information in its Proposal to third parties or to the public generally.

I certify or affirm that to the best of my knowledge and belief, the above statements are true and correct.

Proposer: _____

Officer's Name: _____

Title: _____

Signature: _____

AFFIRMED AND SIGNED before me this _____ day of _____, 2014

by _____ *(name)* as the

_____ *(title)* of _____

(Proposer), and who is personally known to me or produced

_____ as identification.

_____
Notary Public

Notary Stamp:

EXHIBIT "D"

SWORN STATEMENT PURSUANT TO SECTION 287.133(3)(a), FLORIDA STATUTES, ON PUBLIC ENTITY CRIMES

1. This sworn statement is submitted to _____
(print name of the public entity)

by_____
(print individual's name and title)

for_____
(print name of entity submitting sworn statement)

whose business address is

_____

_____

and (if applicable) its Federal Employer Identification Number (FEIN) is:

_____

(If the entity has no FEIN, include the Social Security Number of the Individual signing this sworn statement: _____

2. I understand that a "public entity crime" as defined in Paragraph 287.133(1)(g), **Florida Statutes**, means a violation of any state or federal law by a person with respect to and directly related to the transaction of business with any public entity or with an agency or political subdivision of any other state or of the United States, including, but not limited to, any bid or contract for goods or services to be provided to any public entity or an agency or political subdivision or any other state or of the United States and involving antitrust, fraud, theft, bribery, collusion, racketeering, conspiracy, or material misrepresentation.

3. I understand that "convicted" or "conviction" as defined in Paragraph 287.133(1)(b), **Florida Statutes**, means a finding of guilt or a conviction of a public entity crime, with or without an adjudication of guilt, in any federal or state trial court of record relating to charges brought by indictment or information after July 1, 1989, as a result of jury verdict, nonjury trial, or entry of a plea of guilty or nolo contendere.

4. I understand that an "affiliate" as defined in Paragraph 287.133(1)(a), **Florida Statutes**, means:

a. A predecessor or successor of a person convicted of a public entity crime; or

b. An entity under the control any natural person who is active in the management of the entity and who has been convicted of a public entity crime. The term affiliate" includes those officers, directors, executives, partners, shareholders, employees, members, and agents who are active in the management of an affiliate. The ownership by one person of shares constituting a controlling interest in another person or a pooling of equipment or income among persons when not for fair market value under an arm's length agreement, shall be a prima facie case that one person controls another person. A person who knowingly enters into a joint venture with a person who has been convicted of a public entity crime in Florida

during the preceding 36 months shall be considered an affiliate.

c. I understand that a "person" as defined in Paragraph 287.133(1)(e), **Florida Statutes**, means any natural person or entity organized under the laws of any state or of the United States with the legal power to enter into binding contract and which bids or applies to bid on contracts for the provision of goods or services let by a public entity, or which otherwise transacts or applies to transact business with a public entity. The term "person" includes those officers, directors, executives, partners, shareholders, employees, members, and agents who are active in management of an entity.

d. Based on information and belief, the statement which I have marked below is true in relation to the entity submitting this sworn statement. **(indicate which statement applies.)**

_____ Neither the entity submitting this sworn statement, nor any of its officers, directors, executives, partners, shareholders, employees, members, or agents who are active in the management of the entity, nor any affiliate of the entity has been charged with and convicted of a public entity crime subsequent to July 1, 1989.

_____ The entity submitting this sworn statement, or one or more of its officers, directors, executives, partners, shareholders, employees, members, or agents who are active in the management of the entity, or an affiliate of the entity has been charged with and convicted of a public entity crime subsequent to July 1, 1989.

_____ The entity submitting this sworn statement, or one or more of its officers, directors, executives, partners, shareholders, employees, members, or agents who are active in the management of the entity, or an affiliate of the entity has been charged with and convicted of a public entity crime subsequent to July 1, 1989. However, there has been a subsequent proceeding before a Hearing Officer of the State of Florida, Division of Administrative Hearings and the Final Order entered by the Hearing Officer determined that it was not in the public interest to place the entity submitting this sworn statement on the convicted vendor list. **(attach a copy of the final order)**

[REMAINDER OF PAGE INTENTIONALLY LEFT BLANK]

I UNDERSTAND THAT THE SUBMISSION OF THIS FORM TO THE CONTRACTING OFFICER FOR THE PUBLIC ENTITY IDENTIFIED IN PARAGRAPH 1 (ONE) ABOVE IS FOR THAT PUBLIC ENTITY ONLY AND, THAT HIS FORM IS VALID THROUGH DECEMBER 31 OF THE CALENDAR YEAR IN WHICH IT IS FILED. I ALSO UNDERSTAND THAT I AM REQUIRED TO INFORM THE PUBLIC ENTITY PRIOR TO ENTERING INTO A CONTRACT IN EXCESS OF THE THRESHOLD AMOUNT PROVIDED IN SECTION 287.017, FLORIDA STATUTES FOR CATEGORY TWO OF ANY CHANGE IN THE INFORMATION CONTAINED IN THIS FORM.

_____
(signature)

AFFIRMED AND SIGNED before me this _____ day of _____,

2014, by _____ *(name),* as the

_____ *(title)* of _____ *(Proposer*

firm), and who is personally known to me or who produced _____

_____ as identification.

_____
Notary Public

Notary Stamp:

EXHIBIT "E"

FORM FOR CERTIFICATION RELATING TO PUBLIC CONTRACTING AND ENVIRONMENTAL CRIMES

THIS FORM MUST BE SIGNED AND SWORN TO IN THE PRESENCE OF A NOTARY PUBLIC OR OTHER OFFICIAL AUTHORIZED TO ADMINISTER OATHS.

This sworn statement is submitted to the City of Lake Worth ("City") by

_____ [printed or typed name of

individual] on behalf of _____ [printed or typed

name of entity submitting this sworn statement], whose business address is:

_____

_____

_____

_____

If applicable, the entity's Federal Employer Identification Number (FEIN) is

_____. If the entity has no FEIN, the Social Security Number of the individual

signing this sworn statement is _____.

I understand that no person or entity shall be awarded or receive a City contract for public improvements, procurement of goods or services (including professional services) or a City lease, franchise, concession or management agreement, or shall receive a grant of City monies unless such person or entity has submitted a written certification to the City that it has not:

(1) been convicted of bribery or attempting to bribe a public officer or employee of the City of Lake Worth, Palm Beach County, the State of Florida, or any other public entity, including but not limited to the government of the United States, any state, or any local government authority in the United States, in that officer's or employee's official capacity; or

(2) been convicted of an agreement or collusion among bidders or prospective bidders in restraint of freedom of competition, by agreement to bid a fixed price, or otherwise; or

(3) been convicted of a violation of an environmental law that, in the sole opinion of the City's Purchasing Agent, reflects negatively upon the ability of the person or entity to conduct business in a responsible manner; or

(4) made an admission of guilt of such conduct described in items (1), (2), or (3) above, which is a matter of record, but has not been prosecuted for such conduct, or has made an admission of guilt of such conduct, which is a matter of record pursuant to formal prosecution. An admission of guilt shall be construed to include a plea of *nolo contendere*; or

(5) where an officer, official, agent or employee of a business entity has been convicted of or has admitted guilt to any of the crimes set forth above on behalf of such an entity and pursuant to the direction or authorization of an official thereof (including the person committing the offense, if he is an official of the business entity), the business shall be chargeable with the conduct hereinabove set forth. A business entity shall be chargeable with the conduct of an affiliated entity, whether wholly owned, partially owned, or one which has common ownership or a common Board of Directors. For purposes of this Certification, business entities are affiliated if, directly or indirectly, one business entity controls or has the power to control another business entity, or if an individual or group of individuals controls or has the power to control both entities. Indicia of control shall include, without limitation, interlocking management or ownership, identity of interests among family members, shared organization of a business entity following the ineligibility of a business entity under this policy, or using substantially the same management, ownership or principals as the ineligible entity.

Any person or entity who claims that this policy is inapplicable to him/her/it because a conviction or judgment has been reversed by a court of competent jurisdiction, shall prove the same with documentation satisfactory to the City's Purchasing Agent. Upon presentation of such satisfactory proof, the person or entity shall be allowed to contract with the City.

[REMAINDER OF PAGE INTENTIONALLY LEFT BLANK]

I UNDERSTAND THAT THE SUBMISSION OF THIS FORM TO THE PURCHASING AGENT FOR THE CITY OF LAKE WORTH IS VALID THROUGH DECEMBER 31 OF THE CALENDAR YEAR IN WHICH IT IS FILED. I ALSO UNDERSTAND THAT ANY CONTRACT OR BUSINESS TRANSACTION SHALL PROVIDE FOR SUSPENSION OF PAYMENTS, OR TERMINATION, OR BOTH, IF THE PURCHASING AGENT OR THE CITY MANAGER DETERMINES THAT SUCH PERSON OR ENTITY HAS MADE FALSE CERTIFICATION.

_____
(Signature)

STATE OF _____

COUNTY OF _____

Sworn to and subscribed before me this _____ day of _____, 2014 by

_____.
(Print, type, or stamp Commissioned name of Notary Public)

Signatory Requirement – In the case of a business entity other than a partnership or a corporation, the affidavit shall be executed by an authorized agent of the entity. In the case of a partnership, this affidavit shall be executed by the general partner or partners. In the case of a corporation, this affidavit shall be executed by the corporate president.

PROFESSIONAL SERVICES AGREEMENT
(ECONOMIC AND FINANCIAL VALUE OF ELECTRIC UTILITY SYSTEM)

THIS PROFESSIONAL SERVICES AGREEMENT ("Agreement") is entered into by and between the **City of Lake Worth**, a Florida municipal corporation ("City") and **Willdan Financial Services, Inc.,** a corporation authorized to do business in the State of Florida ("Consultant").

RECITALS

WHEREAS, the City desires to obtain an economic and financial valuation of the Lake Worth Electric Utility System (the "Project"); and,

WHEREAS, the Consultant responded to the City's Request for Qualifications (#13-14-403) for an economic and financial valuation of the Lake Worth Electric Utility System (the "RFQ"); and,

WHEREAS, the City selected the Consultant's as the most qualified for the Project under the RFQ; and,

WHEREAS, the Consultant is willing to provide appropriately licensed, qualified personnel to accomplish the Project; and,

WHEREAS, the purpose of this Agreement is to set forth certain terms and conditions for the accomplishment of the Project by the Consultant.

NOW, THEREFORE, in consideration of the premises and mutual covenants herein contained, the sufficiency of which is hereby acknowledged by the parties, the City and the Consultant agree as follows:

SECTION 1: INCORPORATION OF RECITALS. The foregoing Recitals are incorporated into this Agreement as true and correct statements.

SECTION 2: CONSULTANT'S SERVICES. As more specifically set forth in the RFQ and the Consultant's proposal submitted in response to the RFQ, which are incorporated herein by reference, the Consultant shall provide the City with all goods and services necessary to accomplish and complete the Project. Consultant shall be entitled to reasonably rely upon, with no obligation to verify, the completeness and accuracy of all information, data, reports, studies, plans and specifications provided by City or by the City's attorneys, engineers, accountants, consultants or employees to Consultant. The City shall not make a claim against the Consultant alleging that Consultant should not have relied upon such information provided by the City to Consultant so long as the Consultant's reliance was reasonable and not the result of gross negligence on the part of Consultant.

SECTION 3: INDEPENDENT CONTRACTOR RELATIONSHIP. No relationship of employer or employee is created by this Agreement, it being understood that Consultant will act hereunder as an independent contractor and none of the Consultant's, officers, directors, employees, independent contractors, representatives or agents performing services for Consultant pursuant to this Agreement shall have any claim under this Agreement or otherwise against the City for compensation of any kind under this Agreement. The relationship between the City and Consultant is that of independent contractors, and neither shall be considered a joint venturer, partner, employee, agent, representative or other relationship of the other for any purpose expressly or by implication.

SECTION 4: TERM AND TERMINATION.

a. Term. The term of this Agreement is for a period of one (1) year from the Effective Date (the "Term") unless earlier terminated as stated herein. The "Effective Date" shall be the date the City sends the Consultant a notice to proceed. The parties may agree in writing to extend the Term of this Agreement.

b. Termination without cause. Either party may terminate this Agreement at any time with or without cause by giving not less than ten (10) days prior written notice of termination. In the event of such termination, the Consultant shall submit a final invoice to the City for the services performed to the date of termination and the compensation due the Consultant shall be pro-rated to the amount of services performed to the date of termination. The City shall not be liable for disengagement, wind-down, lost profits or other costs incurred due to termination of this Agreement prior to the Consultant completing the Project.

c. Effect of Termination. Termination of this Agreement shall not affect any rights, obligations, and liabilities of the parties arising out of transactions which occurred prior to termination. Notwithstanding the foregoing, the parties acknowledge and agree that the City is a municipal corporation and political subdivision of the state of Florida, and as such, this Agreement (and all Exhibits hereto) are subject to budgeting and appropriation by the City of funds sufficient to pay the costs associated herewith in any fiscal year of the City. Notwithstanding anything in this Agreement to the contrary, in the event that no funds are appropriated or budgeted by the City's governing board in any fiscal year to pay the costs associated with the City's obligations under this Agreement, or in the event the funds budgeted or appropriated are, or are estimated by the City to be, insufficient to pay the costs associated with the City's obligations hereunder in any fiscal period, then the City will notify Consultant of such occurrence and either the City or Consultant may terminate this Agreement by notifying the other in writing, which notice shall specify a date of termination no earlier than twenty-four (24) hours after giving of such notice. Termination in accordance with the preceding sentence shall be without penalty or expense to the City of any kind whatsoever; however, City shall pay Consultant for all services performed under this Agreement through the date of termination.

SECTION 5: COMPENSATION.

a. Payments. The City agrees to compensate the Consultant **a maximum not-to-exceed price of Forty-Six Thousand Dollars ($46,000.00) for the accomplishing and completing the Project**. The City shall not compensate or reimburse the Consultant for any additional costs incurred as a direct or indirect result of the Consultant accomplishing the Project for the City.

b. Invoices. The Consultant shall render invoices as requested by the City (or at least monthly) for services that have been rendered in conformity with this Agreement. The invoices shall specify the services performed and the time spent on such services. If the City is paying for any reimbursable costs within the maximum not-to-exceed price, the Consultant shall include receipts for all such reimbursable costs. Invoices will normally be paid within thirty (30) days following the City's receipt of the Consultant's invoice.

SECTION 6: INDEMNIFICATION. The Consultant, its officers, employees and agents shall indemnify and hold harmless the City, including its officers, employees and agents from liabilities, damages, losses, and costs, including but not limited to, reasonable attorney's fees (at the trial and appellate levels), to the extent caused by the negligence of the Consultant, its officers, directors, employees, representatives and agents employed or utilized by the Consultant in the performance of the services under this Agreement.

The City agrees to be responsible for its own negligence. Nothing contained in this Agreement shall create a contractual relationship with or a cause of action in favor of a third party against either the City or the Consultant, nor shall this Agreement be construed as a waiver of sovereign immunity for the City beyond the waiver provided in section 768.28, Florida Statutes.

SECTION 7: COMPLIANCE AND DISQUALIFICATION. Each of the parties agrees to perform its responsibilities under this Agreement in conformance with all laws, regulations and administrative instructions that relate to the parties' performance of this Agreement, including, without limitation, the applicable licensure requirements and the Florida Building Code.

SECTION 8: PERSONNEL. The Consultant represents that it has, or will secure at its own expense, all necessary personnel required to perform the services under this Agreement. Such personnel shall not be employees of or have any contractual relationship with the City. All of the services required hereunder shall be performed by the Consultant or under its supervision, and all personnel engaged in performing the services shall be fully qualified and authorized or permitted under federal, state and local law to perform such services.

SECTION 9: SUB-CONSULTANTS. The City reserves the right to accept the use of a sub-consultant or to reject the selection of a particular sub-consultant and approve all qualifications of any sub-consultant in order to make a determination as to the capability of the sub-consultant to perform properly under this Agreement. All sub-consultants providing professional services to the Consultant under this Agreement will also be required to provide their own insurance coverage identical to those contained in this Agreement. In the event that a sub-consultant does not have insurance or does not meet the insurance limits as stated in this Agreement, the Consultant shall indemnify and hold harmless the City for any claim in excess of the sub-consultant's insurance coverage, arising out of the negligent acts, errors or omissions of the sub-consultant. All costs of a sub-consultant shall be a direct pass-through cost to the City.

SECTION 10: FEDERAL AND STATE TAX. The City is exempt from payment of Florida State Sales and Use Tax. The Consultant is not authorized to use the City's Tax Exemption Number.

SECTION 11: **INSURANCE. Prior to commencing any services, the Consultant shall provide proof of insurance coverage as required in the RFQ.** All such insurance policies may not be modified or terminated without the express written authorization of the City. The commercial general liability will name the City as an additional insured and proof of all insurance coverage shall be furnished to the City by way of an endorsement to same or certificate of insurance prior to the provision of services. The certificates shall clearly indicate that the Consultant has obtained insurance of the type, amount, and classification as required for strict compliance with this section. Failure to comply with the foregoing requirements shall not relieve Consultant of its liability and obligations under this Agreement.

SECTION 12: SUCCESSORS AND ASSIGNS. The City and the Consultant each binds itself and its partners, successors, executors, administrators, and assigns to the other party of this Agreement and to the partners, successors, executors, administrators and assigns of such other party, in respect to all covenants of this Agreement. Except as agreed in writing by all parties, this Agreement is not assignable.

SECTION 13: DISPUTE RESOLUTION, LAW, VENUE AND REMEDIES. All claims arising out of this Agreement or its breach shall be submitted first to mediation. The parties shall share the mediator's fee equally. The mediation shall be held in Palm Beach County. Agreements reached in mediation shall be enforceable as settlement agreements in any court having jurisdiction thereof. This Agreement shall be governed by the laws of the State of Florida. Any and all legal action necessary to enforce the Agreement will be held in Palm Beach County. No remedy herein conferred upon any party is intended to be exclusive of any other remedy, and each and every such remedy shall be cumulative and shall be in

addition to every other remedy given hereunder or now or hereafter existing at law or in equity or by statute or otherwise. No single or partial exercise by any party of any right, power, or remedy hereunder shall preclude any other or further exercise thereof.

SECTION 14: WAIVER OF JURY TRIAL. TO ENCOURAGE PROMPT AND EQUITABLE RESOLUTION OF ANY LITIGATION, EACH PARTY HEREBY WAIVES ITS RIGHTS TO A TRIAL BY JURY IN ANY LITIGATION RELATED TO THIS AGREEMENT.

SECTION 15: ACCESS AND AUDITS. The Consultant shall maintain adequate records to justify all payments made by the City under this Agreement for at least three (3) years after completion of this Agreement and longer if required by applicable federal or state law. The City shall have access to such books, records, and documents as required in this section for the purpose of inspection or audit during normal business hours, at the Consultant's place of business. In no circumstances will Consultant be required to disclose any confidential or proprietary information regarding its products and service costs.

SECTION 16: NONDISCRIMINATION. The Consultant warrants and represents that all of its employees are treated equally during employment without regard to race, color, religion, disability, sex, age, national origin, ancestry, marital status, or sexual orientation.

SECTION 17: AUTHORITY TO PRACTICE. The Consultant hereby represents and warrants that it has and will continue to maintain all licenses and approvals required to conduct its business and provide the services required under this Agreement, and that it will at all times conduct its business and provide the services under this Agreement in a reputable manner. Proof of such licenses and approvals shall be submitted to the City upon request.

SECTION 18: SEVERABILITY. If any term or provision of this Agreement, or the application thereof to any person or circumstances shall, to any extent, be held invalid or unenforceable, to remainder of this Agreement, or the application of such terms or provision, to persons or circumstances other than those as to which it is held invalid or unenforceable, shall not be affected, and every other term and provision of this Agreement shall be deemed valid and enforceable to the extent permitted by law.

SECTION 19: PUBLIC ENTITY CRIMES. Consultant acknowledges and agrees that a person or affiliate who has been placed on the convicted vendor list following a conviction for a public entity crime may not submit a bid, proposal, or reply on a contract to provide any goods or services to a public entity; may not submit a bid, proposal, or reply on a contract with a public entity for the construction or repair of a public building or public work; may not submit bids, proposals, or replies on leases of real property to a public entity; may not be awarded or perform work as a contractor, supplier or sub-contractor under a contract with any public entity; and may not transact business with any public entity in excess of the threshold amount provided in Section 287.017, Florida Statues, for CATEGORY TWO for a period of 36 months following the date of being placed on the convicted vendor list. The Consultant will advise the City immediately if it becomes aware of any violation of this statute.

SECTION 20: NOTICE. All notices required in this Agreement shall be sent by hand-delivery, certified mail (RRR), or by nationally recognized overnight courier, and if sent to the CITY shall be sent to:

City of Lake Worth
Attn: City Manager
7 N. Dixie Highway
Lake Worth, FL 33460

and if sent to the Consultant, shall be sent to:

Willdan Financial Services, Inc.
Attn: Jeff McGarvey
200 South Orange Avenue, Suite 1550
Orlando, FL 32801

The foregoing names and addresses may be changed if such change is provided in writing to the other party.

SECTION 21: ENTIRETY OF AGREEMENT. The City and the Consultant agree that this Agreement sets forth the entire agreement between the parties, and that there are no promises or understandings other than those stated herein. None of the provisions, terms and conditions contained in this Agreement may be added to, modified, superseded or otherwise altered, except by written instrument executed by the parties hereto.

SECTION 22: WAIVER. Failure of a party to enforce or exercise any of its right(s) under this Agreement shall not be deemed a waiver of that parties' right to enforce or exercise said right(s) at any time thereafter.

SECTION 23: PREPARATION. This Agreement shall not be construed more strongly against either party regardless of who was more responsible for its preparation.

SECTION 24: MATERIALITY. All provisions of the Agreement shall be deemed material. In the event Consultant fails to comply with any of the provisions contained in this Agreement or exhibits, amendments and addenda attached hereto, said failure shall be deemed a material breach of this Agreement and City may at its option provide notice to the Consultant to terminate for cause.

SECTION 25: LEGAL EFFECT. This Agreement shall not become binding and effective until approved by the City. The Effective Date is the date this Agreement is executed by the City.

SECTION 26: NOTICE OF COMPLAINTS, SUITS AND REGULATORY VIOLATIONS . Each party will promptly notify the other of any complaint, claim, suit or cause of action threatened or commenced against it which arises out of or relates, in any manner, to the performance of this Agreement. Each party agrees to cooperate with the other in any investigation either may conduct, the defense of any claim or suit in which either party is named, and shall do nothing to impair or invalidate any applicable insurance coverage.

SECTION 27: SURVIVABILITY. Any provision of this Agreement which is of a continuing nature or imposes an obligation which extends beyond the term of this Agreement shall survive its expiration or earlier termination.

SECTION 28: COUNTERPARTS. This Agreement may be executed in one or more counterparts, each of which shall be deemed an original, and will become effective and binding upon the parties as of the effective date at such time as all the signatories hereto have signed a counterpart of this Agreement.

SECTION 29: PALM BEACH COUNTY IG. In accordance with Palm Beach County ordinance number 2011-009, the CONSULTANT acknowledges that this Agreement may be subject to investigation and/or audit by the Palm Beach County Inspector General. The CONSULTANT has reviewed Palm Beach County ordinance number 2011-009 and is aware of its rights and/or obligations under such ordinance.

SECTION 30: AGREEMENT DOCUMENTS AND CONTROLLING PROVISIONS. This Agreement consists of this Agreement, the RFQ and the Consultant's proposal in response to the RFQ. The parties agree to be bound by all the terms and conditions set forth in the aforementioned documents. To the extent that there exists a conflict between this Agreement and the remaining documents, the terms, conditions, covenants, and/or provisions of this Agreement shall prevail with the RFP next taking precedence. Wherever possible, the provisions of such documents shall be construed in such a manner as to avoid conflicts between provisions of the various documents.

SECTION 32: REPRESENTATIONS and BINDING AUTHORITY. By signing this Agreement, the below representative of the Consultant hereby represents to the City that he or she has the authority and full legal power to execute this Agreement and any and all documents necessary to effectuate and implement the terms of this Agreement on behalf of the Consultant for whom he or she is signing and to bind and obligate such party with respect to all provisions contained in this Agreement.

SECTION 33: PUBLIC RECORDS. Effective July 1, 2013, pursuant to section 119.0701, Florida Statutes, the Consultant shall comply with Florida's Public Records Act, Chapter 119, Florida Statutes, and specifically agrees to:

(a) Keep and maintain all public records that ordinarily and necessarily would be required by the CITY to keep and maintain in order to perform the services under this Agreement.

(b) Provide the public with access to said public records on the same terms and conditions that the City would provide the records and at a cost that does not exceed the cost provided in Chapter 119, Florida Statutes, or as otherwise provided by law.

(c) Ensure that said public records that are exempt or confidential and exempt from public records disclosure requirements are not disclosed except as authorized by law.

(d) Meet all requirements for retaining said public records and transfer, at no cost, to the City all said public records in possession of the Consultant upon termination of the Agreement and destroy any duplicate public records that are exempt or confidential and exempt from Chapter 119, Florida Statutes, disclosure requirements. All records stored electronically must be provided to the City in a format that is compatible with the information technology systems of the City.

SECTION 34: OWNERSHIP OF DOCUMENTS. The reports, appraisals, drawings, mock-ups, renderings, calculations, supporting documents, or other work products which are listed as deliverables by the Consultant to the City shall become the property of the City upon delivery. The Consultant may keep copies or samples thereof and shall have the right to use such drawings, mock-ups, renderings, calculations, supporting documents, or other documents. The City accepts sole responsibility for the reuse of any such documents in a manner other than as initially intended, or for any use of incomplete documents unless prior written approval is obtained from the Consultant.

REMAINDER OF THIS PAGE INTENTIONALLY LEFT BLANK
SIGNATURE PAGE FOLLOWS

IN WITNESS WHEREOF, the parties hereto have made and executed this Professional Services Agreement (ECONOMIC AND FINANCIAL VALUE OF ELECTRIC UTILITY SYSTEM) as of the day and year set forth below by the City.

CITY OF LAKE WORTH, FLORIDA

Date: _____

By: _____
Pam Triolo, Mayor

ATTEST:

_____
Pamela J. Lopez, City Clerk

Approved as to form and
legal sufficiency:

_____ for
Glen J. Torcivia, City Attorney

WILLDAN FINANCIAL SERVICES, INC.

By: _____

[Corporate Seal]

Print Name: Jeff McGarvey
Print Title: Vice President, Managing Principal

STATE OF Florida)
COUNTY OF Orange)

The foregoing instrument was acknowledged before me this 17th day of Nov., 2014, by Jeff McGarvey, as VP of Willdan Financial Services, Inc., and who is personally known to me or who has produced the following FLDLM261430634220 as identification.

Notary Public

Christina Cheryl Ennis

CHRISTINA CHERYL ENNIS
Notary Public - State of Florida
My Comm. Expires Dec 23, 2017
Commission # FF 077259
Bonded Through National Notary Assn.

Where the Tropics Begin

PROCUREMENT OFFICE
7 North Dixie Highway
Lake Worth, FL 33460
Tel: 561-586-1674

LIST OF PROPOSERS
RFQ 13-14-403

ECONOMIC VALUE OF ELECTRIC SYSTEM TO THE CITY OF LAKE WORTH

The following firms have submitted to the Procurement Office on or before 12:00 p.m. on July14, 2014. RFQs were opened by Sarah Vinci.

Total number of Proposers: 3

Federal Appraisal & Consulting, LLC
460 US Hwy 22 West, Suite 403
Whitehouse Station, New Jersey 08889
Contact: Dolores Noboa
Title: Executive Assistant
E-mail: dnoboa@FederalAppraisal.com
Phone: 908-428-7990

GAI Consultants, Inc
618 E South Street, Suite 700
Orlando, FL 32801
Contact: Thomas R Kohler
Title: Senior Director
E-mail: t.kohler@gaiconsultants.com, SMcDonald@gaiconsultants.com
Phone: 407-423-8398

Willdan Financial Services
200 South Orange Street, Suite 1550
Orlando, FL 32801
Contact: Jeffrey McGarvey
Title: Managing Principal
Email: JMcGarvey@Willdan.com
Phone: 407-872-2467

City of Lake Worth
Evaluation Matrix

PROCUREMENT OFFICE
7 North Dixie Highway
Lake Worth, FL 33460

RFQ 13-14-403

Economic and Financial Value of Electric Utility System

Evaluation Meeting: Monday, July 28, 2014

TOTAL AVERAGE WEIGHTED SCORI

RANKED: [redacted]

	Evaluation Criteria Score Sheet:	Weight	Federal Appraisal & Consulting	GAI Consultants	Willdan
1	Ability, capacity and skill of personnel who will be assigned to perform the contract and provide the work products and services required	55	31.00	51.40	46.00
2	Relevant experience of proposer's firm and personnel to be assigned to the project in Florida	20	9.00	17.60	17.20
3	Time and Task Budget and Maximum Not To Exceed Price.	20	10.40	15.40	19.00
4	Variances: As noted in the body of this RFQ, variances to certain provisions of the RFQ, including variances to the Scope of Services, are unacceptable, such that a variance proposed to such provisions will result in disqualification of the Proposal. Proposals having zero variances will get full points; other proposed variances will be evaluated on the basis of whether they would, in the Evaluation Committee's estimation, diminish the value of the proposal to the City	5	3.60	4.60	4.00
	TOTAL AVERAGE POSSIBLE POINTS	100	54	89	86
	Total Points Received:		270	447	431

	Federal Appraisal & Consulting	GAI Consultants	Willdan
Maximum Not to Exceed Price	$ 75,000	$ 74,985	$ 48,000
Exhibit A	not signed	yes	yes
Exhibit B	yes	yes	yes
Exhibit C	yes	yes	yes
Exhibit D	yes	yes	yes
Exhibit E	yes	yes	yes

City of Lake Worth
Evaluation Matrix

RFQ 13-14-403

Economic and Financial Value of Electric Utility System

Evaluation Meeting: TBD

			RANKED:
Evaluation Criteria Score Sheet:		**Weight**	**Federal Appraisal & Consulting**
1	Ability, capacity and skill of personnel who will be assigned to perform the contract and provide the work products and services required	55	0.00 30
2	Relevant experience of proposer's firm and personnel to be assigned to the project in Florida	20	0.00 10
3	Time and Task Budget and Maximum Not To Exceed Price.	20	0.00 10
4	Variances: As noted in the body of this RFQ, variances to certain provisions of the RFQ, including variances to the Scope of Services, are unacceptable, such that a variance proposed to such provisions will result in disqualification of the Proposal. Proposals having zero variances will get full points; other proposed variances will be evaluated on the basis of whether they would, in the Evaluation Committee's estimation, diminish the value of the proposal to the City	5	0.00 2
	TOTAL AVERAGE POSSIBLE POINTS	100	0 52
		Total Points Received:	0

	Federal Appraisal & Consulting

7/28/14

City of Lake Worth
Evaluation Matrix

PROCI
7 N
Lal

RFQ 13-14-403

Economic and Financial Value of Electric Utility System

Evaluation Meeting: TBD

TOTAL AVERAGE

RANKED:

	Evaluation Criteria Score Sheet:	**Weight**	**GAI Consultants**
1	Ability, capacity and skill of personnel who will be assigned to perform the contract and provide the work products and services required	55	0.00 50
2	Relevant experience of proposer's firm and personnel to be assigned to the project in Florida	20	0.00 15
3	Time and Task Budget and Maximum Not To Exceed Price.	20	0.00 15
4	Variances: As noted in the body of this RFQ, variances to certain provisions of the RFQ, including variances to the Scope of Services, are unacceptable, such that a variance proposed to such provisions will result in disqualification of the Proposal. Proposals having zero variances will get full points; other proposed variances will be evaluated on the basis of whether they would, in the Evaluation Committee's estimation, diminish the value of the proposal to the City	5	0.00 5
	TOTAL AVERAGE POSSIBLE POINTS	100	0 85
	Total Points Received:		0

	GAI Consultants

7/28/14

City of Lake Worth
Evaluation Matrix

JREMENT OFFICE
Jorth Dixie Highway
ke Worth, FL 33460

RFQ 13-14-403

Economic and Financial Value of Electric Utility System

Evaluation Meeting: TBD

WEIGHTED SCOR

RANKED:

	Evaluation Criteria Score Sheet:	**Weight**	**Willdan**
1	Ability, capacity and skill of personnel who will be assigned to perform the contract and provide the work products and services required	55	0.00 40
2	Relevant experience of proposer's firm and personnel to be assigned to the project in Florida	20	0.00 15
3	Time and Task Budget and Maximum Not To Exceed Price.	20	0.00 15
4	Variances: As noted in the body of this RFQ, variances to certain provisions of the RFQ, including variances to the Scope of Services, are unacceptable, such that a variance proposed to such provisions will result in disqualification of the Proposal. Proposals having zero variances will get full points; other proposed variances will be evaluated on the basis of whether they would, in the Evaluation Committee's estimation, diminish the value of the proposal to the City	5	0.00 3
	TOTAL AVERAGE POSSIBLE POINTS	100	0 73
		Total Points Received:	0

	Willdan

7/28/14

City of Lake Worth
Evaluation Matrix

RFQ 13-14-403

Economic and Financial Value of Electric Utility System

Evaluation Meeting: TBD

RANKED: [redacted]

	Evaluation Criteria Score Sheet:	**Weight**	**Federal Appraisal & Consulting**	
1	Ability, capacity and skill of personnel who will be assigned to perform the contract and provide the work products and services required	55	0.00	30
2	Relevant experience of proposer's firm and personnel to be assigned to the project in Florida	20	0.00	10
3	Time and Task Budget and Maximum Not To Exceed Price.	20	0.00	0
4	Variances: As noted in the body of this RFQ, variances to certain provisions of the RFQ, including variances to the Scope of Services, are unacceptable, such that a variance proposed to such provisions will result in disqualification of the Proposal. Proposals having zero variances will get full points; other proposed variances will be evaluated on the basis of whether they would, in the Evaluation Committee's estimation, diminish the value of the proposal to the City	5	0.00	5
	TOTAL AVERAGE POSSIBLE POINTS	100	0	
	Total Points Received:		0	45

	Federal Appraisal & Consulting

7-28-14

City of Lake Worth
Evaluation Matrix

PROCI
7 N
Lal

RFQ 13-14-403

Economic and Financial Value of Electric Utility System

Evaluation Meeting: TBD

TOTAL AVERAGE

RANKED:

	Evaluation Criteria Score Sheet:	**Weight**	**GAI Consultants**
1	Ability, capacity and skill of personnel who will be assigned to perform the contract and provide the work products and services required	55	0.00 55
2	Relevant experience of proposer's firm and personnel to be assigned to the project in Florida	20	0.00 20
3	Time and Task Budget and Maximum Not To Exceed Price.	20	0.00 10
4	Variances: As noted in the body of this RFQ, variances to certain provisions of the RFQ, including variances to the Scope of Services, are unacceptable, such that a variance proposed to such provisions will result in disqualification of the Proposal. Proposals having zero variances will get full points; other proposed variances will be evaluated on the basis of whether they would, in the Evaluation Committee's estimation, diminish the value of the proposal to the City	5	0.00 5
	TOTAL AVERAGE POSSIBLE POINTS	100	0
		Total Points Received:	0 90

	GAI Consultants

7-28-14

City of Lake Worth
Evaluation Matrix

JREMENT OFFICE
Jorth Dixie Highway
ke Worth, FL 33460

RFQ 13-14-403

Economic and Financial Value of Electric Utility System

Evaluation Meeting: TBD

WEIGHTED SCOR

RANKED:

	Evaluation Criteria Score Sheet:	**Weight**	**Willdan**
1	Ability, capacity and skill of personnel who will be assigned to perform the contract and provide the work products and services required	55	0.00 55
2	Relevant experience of proposer's firm and personnel to be assigned to the project in Florida	20	0.00 20
3	Time and Task Budget and Maximum Not To Exceed Price.	20	0.00 20
4	Variances: As noted in the body of this RFQ, variances to certain provisions of the RFQ, including variances to the Scope of Services, are unacceptable, such that a variance proposed to such provisions will result in disqualification of the Proposal. Proposals having zero variances will get full points; other proposed variances will be evaluated on the basis of whether they would, in the Evaluation Committee's estimation, diminish the value of the proposal to the City	5	0.00 5
	TOTAL AVERAGE POSSIBLE POINTS	100	0
	Total Points Received:		0 100

	Willdan

7-28-14

City of Lake Worth
Evaluation Matrix

RFQ 13-14-403

Economic and Financial Value of Electric Utility System

Evaluation Meeting: TBD

RANKED: [redacted]

	Evaluation Criteria Score Sheet:	**Weight**	**Federal Appraisal & Consulting**	
1	Ability, capacity and skill of personnel who will be assigned to perform the contract and provide the work products and services required	55	0.00	45
2	Relevant experience of proposer's firm and personnel to be assigned to the project in Florida	20	0.00	10
3	Time and Task Budget and Maximum Not To Exceed Price.	20	0.00	20
4	Variances: As noted in the body of this RFQ, variances to certain provisions of the RFQ, including variances to the Scope of Services, are unacceptable, such that a variance proposed to such provisions will result in disqualification of the Proposal. Proposals having zero variances will get full points; other proposed variances will be evaluated on the basis of whether they would, in the Evaluation Committee's estimation, diminish the value of the proposal to the City	5	0.00	3
	TOTAL AVERAGE POSSIBLE POINTS	100	0	78
		Total Points Received:	0	

78	**Federal Appraisal & Consulting**

7-28-14

City of Lake Worth

Evaluation Matrix

PROCI
7 N
Lal

RFQ 13-14-403

Economic and Financial Value of Electric Utility System

Evaluation Meeting: TBD

TOTAL AVERAGE

RANKED:

	Evaluation Criteria Score Sheet:	**Weight**	**GAI Consultants**	
1	Ability, capacity and skill of personnel who will be assigned to perform the contract and provide the work products and services required	55	0.00	52
2	Relevant experience of proposer's firm and personnel to be assigned to the project in Florida	20	0.00	18
3	Time and Task Budget and Maximum Not To Exceed Price.	20	0.00	20
4	Variances: As noted in the body of this RFQ, variances to certain provisions of the RFQ, including variances to the Scope of Services, are unacceptable, such that a variance proposed to such provisions will result in disqualification of the Proposal. Proposals having zero variances will get full points; other proposed variances will be evaluated on the basis of whether they would, in the Evaluation Committee's estimation, diminish the value of the proposal to the City	5	0.00	5
	TOTAL AVERAGE POSSIBLE POINTS	100	**0**	95
		Total Points Received:	0	

95	**GAI Consultants**

7-28-14

City of Lake Worth
Evaluation Matrix

JREMENT OFFICE
Jorth Dixie Highway
ke Worth, FL 33460

RFQ 13-14-403

Economic and Financial Value of Electric Utility System

Evaluation Meeting: TBD

WEIGHTED SCOR

RANKED:

	Evaluation Criteria Score Sheet:	**Weight**	**Willdan**	
1	Ability, capacity and skill of personnel who will be assigned to perform the contract and provide the work products and services required	55	0.00	50
2	Relevant experience of proposer's firm and personnel to be assigned to the project in Florida	20	0.00	15
3	Time and Task Budget and Maximum Not To Exceed Price.	20	0.00	20
4	Variances: As noted in the body of this RFQ, variances to certain provisions of the RFQ, including variances to the Scope of Services, are unacceptable, such that a variance proposed to such provisions will result in disqualification of the Proposal. Proposals having zero variances will get full points; other proposed variances will be evaluated on the basis of whether they would, in the Evaluation Committee's estimation, diminish the value of the proposal to the City	5	0.00	3
	TOTAL AVERAGE POSSIBLE POINTS	100	**0**	
	Total Points Received:		0	88

88	**Willdan**

7-28-14

City of Lake Worth
Evaluation Matrix

PROCU
7 N
Lal

RFQ 13-14-403

Economic and Financial Value of Electric Utility System

Evaluation Meeting: TBD

TOTAL AVERAGE

RANKED:

	Evaluation Criteria Score Sheet:	Weight	GAI Consultants Orlando
1	Ability, capacity and skill of personnel who will be assigned to perform the contract and provide the work products and services required	55	0.00 50
2	Relevant experience of proposer's firm and personnel to be assigned to the project in Florida	20	0.00 18
3	Time and Task Budget and Maximum Not To Exceed Price. $74,965	20	0.00 12
4	Variances: As noted in the body of this RFQ, variances to certain provisions of the RFQ, including variances to the Scope of Services, are unacceptable, such that a variance proposed to such provisions will result in disqualification of the Proposal. Proposals having zero variances will get full points; other proposed variances will be evaluated on the basis of whether they would, in the Evaluation Committee's estimation, diminish the value of the proposal to the City	5	0.00 5
	TOTAL AVERAGE POSSIBLE POINTS	100	0
	Total Points Received:		0 85

	GAI Consultants

Economist 20yrs
Strategic Analyst 18yrs
Redevelopment 26yrs
PhD 41yrs
PE 40yrs
PE 30yrs

Cost-benefit
economic impact
indep. dev.!

Dover DE
Dominion VA

7-28-14

City of Lake Worth
Evaluation Matrix

JREMENT OFFICE
Jorth Dixie Highway
ke Worth, FL 33460

RFQ 13-14-403

Economic and Financial Value of Electric Utility System

Evaluation Meeting: TBD

WEIGHTED SCOR

RANKED: [redacted]

	Evaluation Criteria Score Sheet:	Weight	Willdan Orlando
1	Ability, capacity and skill of personnel who will be assigned to perform the contract and provide the work products and services required	55	0.00 35
2	Relevant experience of proposer's firm and personnel to be assigned to the project in Florida	20	0.00 20
3	Time and Task Budget and Maximum Not To Exceed Price. 946k	20	0.00 20
4	Variances: As noted in the body of this RFQ, variances to certain provisions of the RFQ, including variances to the Scope of Services, are unacceptable, such that a variance proposed to such provisions will result in disqualification of the Proposal. Proposals having zero variances will get full points; other proposed variances will be evaluated on the basis of whether they would, in the Evaluation Committee's estimation, diminish the value of the proposal to the City	5	0.00 5
	TOTAL AVERAGE POSSIBLE POINTS	100	0 80
	Total Points Received:		0

	Willdan

Pantherwel Harrison Consultants

CPA - Utility Acct - 14yrs.
- Cust. Sales/Bills - 22yrs
- Water / Wgs H2O - N/A
- Planning/Finance 20yrs
-
JD - 'P3' - Planning 15yrs
PE - Accounting Approaches 30yrs

Risk factors - $, rates, industry, location
"City" shared functions impact
Contracts, prop. ownership
- Intangibles - ?

- Dam DE
- Vero Beach

2-28-14

City of Lake Worth
Evaluation Matrix

RFQ 13-14-403

Economic and Financial Value of Electric Utility System

Evaluation Meeting: TBD

RANKED: [redacted]

	Evaluation Criteria Score Sheet:	Weight	Federal Appraisal & Consulting	N.J.
1	Ability, capacity and skill of personnel who will be assigned to perform the contract and provide the work products and services required	55	0.00	20
2	Relevant experience of proposer's firm and personnel to be assigned to the project in Florida	20	0.00	5
3	Time and Task Budget and Maximum Not To Exceed Price.	20	0.00	12
4	Variances: As noted in the body of this RFQ, variances to certain provisions of the RFQ, including variances to the Scope of Services, are unacceptable, such that a variance proposed to such provisions will result in disqualification of the Proposal. Proposals having zero variances will get full points; other proposed variances will be evaluated on the basis of whether they would, in the Evaluation Committee's estimation, diminish the value of the proposal to the City	5	0.00	5
	TOTAL AVERAGE POSSIBLE POINTS	100	0	
	Total Points Received:		0	42

	Federal Appraisal & Consulting

Market Value ? (402?)
Sales Comp.
Income
Cost

MRICS - 25yrs exp

AES
Dominion
PGE
ConEd
FPL

gather data furnished by Clerk

7-28-14

City of Lake Worth
Evaluation Matrix

PROCUREMENT OFFICE
7 North Dixie Highway
Lake Worth, FL 33460

RFQ 13-14-403

Economic and Financial Value of Electric Utility System

Evaluation Meeting: Monday, July 28, 2014

TOTAL AVERAGE WEIGHTED SCORI

RANKED:

	Evaluation Criteria Score Sheet:	**Weight**	**Federal Appraisal & Consulting**	**GAI Consultants**	**Willdan**
1	Ability, capacity and skill of personnel who will be assigned to perform the contract and provide the work products and services required	55	0.00 30	0.00 50	50 0.00
2	Relevant experience of proposer's firm and personnel to be assigned to the project in Florida	20	0.00 10	0.00 18	16 0.00
3	Time and Task Budget and Maximum Not To Exceed Price.	20	0.00 10	0.00 20	20 0.00
4	Variances: As noted in the body of this RFQ, variances to certain provisions of the RFQ, including variances to the Scope of Services, are unacceptable, such that a variance proposed to such provisions will result in disqualification of the Proposal. Proposals having zero variances will get full points; other proposed variances will be evaluated on the basis of whether they would, in the Evaluation Committee's estimation, diminish the value of the proposal to the City	5	0.00 3	0.00 4	0.00 4
	TOTAL AVERAGE POSSIBLE POINTS	100	0 53	0 92	90 0
	Total Points Received:		0 53	0 92	90 0

	Federal Appraisal & Consulting	**GAI Consultants**	**Willdan**

7/28/14

From: FinanceDept@lakeworth.org
Sent: Thursday, November 20, 2014 12:00 PM
To: Steven Carr
Attachments: 20141120115933213.pdf

This E-mail was sent from "RNPF85091" (Aficio MP 2550).

Scan Date: 11.20.2014 11:59:33 (-0500)
Queries to: FinanceDept@lakeworth.org

CITY OF LAKE WORTH
7 North Dixie Highway · Lake Worth, Florida 33460 · Phone: 561-586-1600· Fax: 561-586-1750

DRAFT
AGENDA
CITY OF LAKE WORTH
CITY COMMISSION MEETING
CITY HALL COMMISSION CHAMBER
TUESDAY, JANUARY 06, 2015 - 6:00 PM

1. **ROLL CALL:**

2. **INVOCATION:**

3. **PLEDGE OF ALLEGIANCE:**

4. **AGENDA - Additions/Deletions/Reordering:**

5. **PRESENTATIONS:** (there is no public comment on Presentation items)

6. **COMMISSION LIAISON REPORTS AND COMMENTS:**

7. **PUBLIC PARTICIPATION OF NON-AGENDAED ITEMS AND CONSENT AGENDA:**

8. **APPROVAL OF MINUTES:**

9. **CONSENT AGENDA:** (public comment allowed during Public Participation of Non-Agendaed items)

   A. Resolution No. xx-2015 - agreement with the Supervisor of Elections Office for equipment use and election services

   B. Authorize the use of outside legal services for Fiscal Year 2015

   C. Agreement with Palm Beach County for relocation of a portion of the Snook Islands floating dock to Bryant Park

10. **PUBLIC HEARINGS:**

11. **UNFINISHED BUSINESS:**

12. **NEW BUSINESS:**

    A. Agreement with CGI Communications, Inc. for online video highlights of the City's community

Agenda Date: January 6, 2015 Regular Meeting

13. LAKE WORTH ELECTRIC UTILITY:

A. PRESENTATION: (there is no public comment on Presentation items)

1) Update on the electric utility system

B. CONSENT AGENDA: (public comment allowed during Public Participation of Non-Agendaed items)

C. PUBLIC HEARING:

D. NEW BUSINESS:

14. CITY ATTORNEY'S REPORT:

15. CITY MANAGER'S REPORT:

A. January 20, 2015 Draft Commission Agenda

16. ADJOURNMENT:

If a person decides to appeal any decision made by the board, agency or commission with respect to any matter considered at such meeting or hearing, he or she will need a record of the proceedings, and that, for such purpose, he or she may need to ensure that a verbatim record of the proceedings is made, which record includes the testimony and evidence upon which the appeal is to be based. (F.S. 286.0105)

NOTE:ONE OR MORE MEMBERS OF ANY BOARD, AUTHORITY OR COMMISSION MAY ATTEND AND SPEAK AT ANY MEETING OF ANOTHER CITY BOARD, AUTHORITY OR COMMISSION.