CITY OF LAKE WORTH
7 North Dixie Highway · Lake Worth, Florida 33460 · Phone: 561-586-1600· Fax: 561-586-1750

AGENDA
CITY OF LAKE WORTH
CITY COMMISSION MEETING
CITY HALL COMMISSION CHAMBER
TUESDAY, FEBRUARY 17, 2015 - 6:00 PM

1. **ROLL CALL:**

2. **INVOCATION:** Reverend Elie Louissant, Salem Haitian Evangelical Lutheran Church

3. **PLEDGE OF ALLEGIANCE:** Commissioner John Szerdi

4. **AGENDA - Additions/Deletions/Reordering:**

5. **PRESENTATIONS:** (there is no public comment on Presentation items)

   A. Historic Resource Preservation Board update

6. **COMMISSION LIAISON REPORTS AND COMMENTS:**

7. **PUBLIC PARTICIPATION OF NON-AGENDAED ITEMS AND CONSENT AGENDA:**

8. **APPROVAL OF MINUTES:**

   A. City Commission Work Session - January 27, 2015
   B. City Commission Special Meeting - February 3, 2015
   C. City Commission Meeting - February 3, 2015

9. **CONSENT AGENDA:** (public comment allowed during Public Participation of Non-Agendaed items)

   A. Agreement with Cedars Electro-Mechanical, Inc. for the replacement of the chiller unit at the Public Safety Complex

   B. Ratify a board member to the City Recreation Advisory Board

   C. Contract with All Webbs Enterprises, Inc. for the reconstruction of Potable Surficial Aquifer Well 12 and Task Order 11 with Mock, Roos and Associates, Inc. for associated construction phase services

10. PUBLIC HEARINGS:

A. Ordinance No. 2015-03 - Second Reading and Public Hearing - amend Chapter 18 to address all City utilities with specific provisions for water, sewer and stormwater

11. UNFINISHED BUSINESS:

A. Update on the newly modified 7th Avenue South between A and F Streets improvement design

12. NEW BUSINESS:

A. Resolution No. 08-2015 - establish water and sewer utility fees and charges to be effective April 1, 2015

B. Resolution No. 09-2015 - regulatory and administrative requirements in the Policies and Procedures Manual - Water Utilities Department

C. Discuss providing space to the United States Green Building Council South Florida Chapter

13. LAKE WORTH ELECTRIC UTILITY:

A. CONSENT AGENDA: (public comment allowed during Public Participation of Non-Agendaed items)

B. PUBLIC HEARING:

C. NEW BUSINESS:

14. CITY ATTORNEY'S REPORT:

15. CITY MANAGER'S REPORT:

A. March 17, 2015 draft Commission agenda

16. ADJOURNMENT:

If a person decides to appeal any decision made by the board, agency or commission with respect to any matter considered at such meeting or hearing, he or she will need a record of the proceedings, and that, for such purpose, he or she may need to ensure that a verbatim record of the proceedings is made, which record includes the testimony and evidence upon which the appeal is to be based. (F.S. 286.0105)

NOTE: ONE OR MORE MEMBERS OF ANY BOARD, AUTHORITY OR COMMISSION MAY ATTEND AND SPEAK AT ANY MEETING OF ANOTHER CITY BOARD, AUTHORITY OR COMMISSION.

CITY OF LAKE WORTH

7 North Dixie Highway · Lake Worth, Florida 33460 · Phone: 561-586-1600· Fax: 561-586-1750

AGENDA DATE: February 17, 2015, Regular Meeting **DEPARTMENT:** City Clerk

---

EXECUTIVE BRIEF

TITLE:
Historic Resource Preservation Board update

SUMMARY:
Wes Blackman, Board Chair, will update the Commission on activities that have taken place over the past several months.

BACKGROUND AND JUSTIFICATION:
The board members shall consider historic preservation issues. The members serve three-year terms. The last update from the Historic Resources Preservation Board was on May 20, 2014.

MOTION:
Not applicable

ATTACHMENT(S):
Fiscal Impact Analysis – Not Applicable

City of Lake Worth
Historic Resource Preservation Board

Presentation
February 17, 2015
City Commission Meeting

Board Membership

Historic Resources Preservation Board
Members – Three Year Terms

Wes	Blackman, Chair	31-Jul-2017	Planning	District 3 Appointment
Darrin	Engel	31-Jul-2017	Professional/Architecture	District 4 Appointment
Judith	Just	31-Jul-2016	Law	Vice Mayor District 1 Appointment
Thomas	Norris	31-Jul-2016	Architecture	District 2 Appointment
Herman	Robinson, Vice-Chair	31-Jul-2015	Related Field	
Loretta	Sharpe	31-Jul-2017	Real Estate Sales	Mayor's Appointment
Jimmy	Zoellner	31-Jul-2017	Citizen at Large	Vice Mayor District 1 Appointment

Meeting Schedule
2nd Wednesday of Each Month – 6:00 pm
City Hall Commission Chambers
7 North Dixie Highway
Lake Worth, FL 33460
Staff Liaison
Sandi DuBose
sdubose@lakeworth.org

Historic Districts and Resources

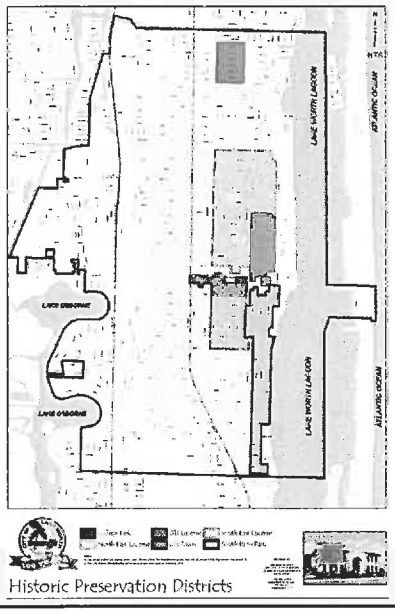

National Register of Historic Places

- City Hall Annex
- Gulfstream Hotel
- Old Osborne Elementary School
- College Park Neighborhood District
- Old Town Historic District
- Old Lucerne Historic District

Lake Worth Register of Historic Places

- South Palm Park Neighborhood District
- Southeast Lucerne Townsite District
- Northeast Lucerne Townsite District
- 701 South K Street
- FEC Railroad Freight Depot at 1105 2nd Avenue South

Approval Matrix

City of Lake Worth
Historic Resources Preservation Board
Certificate of Appropriateness (COA) Approved Matrix (1)

Action	Designated Landmarks or Contributing Structures			Non-Contributing		
	No Approval	Staff Approval	Board Approval	No Approval	Staff Approval	Board Approval
Additions to Primary Buildings			☐			☐
Additions to Ancillary Structures			☐		☐	
Alterations, Interior (Not Specifically Designated; Not Affecting Exterior Appearance	☐			☐		
Alterations Exterior Using Same/Similar Materials and Design (2)		☐			☐	
Alterations Exterior Using Alternate Materials and Design (2)			☐		☐	
Awnings		☐			☐	
Deck, Front Yard or Otherwise Visible from Street		☐			☐	
Deck, Rear Yard, Not Visible from Street		☐		☐		
Demolition & Condemnation, Public, National Register Listing			☐		☐	
Demolition & Condemnation, Public, Not National Register			Board Notice	☐		
Demolition, Private			☐			☐

2014 Statistics

45 cases heard by the Historic Resource Preservation Board.

Averages to about 4 cases per month. Includes some text changes and conceptual reviews, along with a few carry-overs from previous meetings.

2014 Cases
Total: 26 Board Cases Submitted
238 Administrative Cases Submitted

1/10/2015	14-00100244	626 N Palmway	Exterior Alterations
	14-00200001	10-Yr WSP	Comp Plan Amendment

Historic Preservation

Historic Evolution

Questions?

MINUTES
CITY OF LAKE WORTH
CITY COMMISSION
WORK SESSION
JANUARY 27, 2015 – 6:00 PM

The meeting was called to order by Mayor Triolo on the above date at 6:00 PM in the Compass Community Center, located at 201 North Dixie Highway, Lake Worth, Florida.

1. ROLL CALL:

Present were Mayor Pam Triolo; Vice Mayor Scott Maxwell; and Commissioners Christopher McVoy, Andy Amoroso, and John Szerdi (arrived 6:46 PM). Also present were City Manager Michael Bornstein, Assistant City Attorney Christy Goddeau, and City Clerk Pamela Lopez.

2. PLEDGE OF ALLEGIANCE:

The pledge of allegiance was led by Vice Mayor Scott Maxwell.

3. UPDATES/FUTURE ACTION/DIRECTION:

A. Discuss how to pay for the City's infrastructure needs

Mayor Triolo announced that the purpose of this meeting was to discuss financing the City's infrastructure needs and the community wanting further discussion on financial options. She said everyone agreed that streets needed to be fixed. This meeting was to discuss financial options and not to berate or belittle anyone.

City Manager Bornstein introduced the following experts in attendance to answer questions: Heather Encinosa, to advise on bond; Jay Glover, the City's financial advisor; and Christy Goddeau, the City's Assistant City Attorney. He said the City's Finance Director was in transit to his new position with Lake Worth and was not present. City staff was also in attendance to answer any questions.

He said the Commission was directed to open discussion on options to finance infrastructure that was needed throughout the City. There was a need to put all ideas "on the table" to determine if the concepts were legal. This meeting was a way to come to consensus on how to fund the infrastructure plan. There were maps on the wall, sign-in sheets, and comment cards in the room to encourage dialogue and push information out.

Mayor Triolo asked for those individuals who wanted to speak to fill out a comment card. There would be no time limit on how long each individual would be allowed to speak.

Loretta Sharpe said she was originally against the General Obligation Bond then looked around, spoke to experts and staff, and then determined that this was something that had to be done. There was not enough water pressure in the City's pipes to put out fires and there were potholes in the streets. She said she still did not like paying for the bond, putting money into the Park of Commerce projects, and the $800,000 neighborhood enhancement plan. She suggested financing the improvements through fire, police, and fire hydrant assessments and supported every house in Lake Worth being assessed.

Peter Timm said the General Obligation Bond failed because people were not told the truth. Some people would pay nothing while others would pay thousands of dollars. The City said the only way to pay for the improvements was with a bond. He suggested funding the infrastructure with a non ad-valorem tax. He said many parts of the improvement plan had nothing to do with roads or water pressure, which should be paid through the Water Fund. He said water and sewer rates were raised to pay for improvements.

Katie McGiveron commented that she was involved with the Citizens Against Unfair Tax Political Committee. She said she did not want to do it, but for the sake of her family, she could not afford to live in Lake Worth. She commented that this meeting was premature and asked for, but did not receive, a request to hear why the voters did not like the bond. She said this meeting was nice; however, she was supposed to give the Commission her reasons on how to take more money out of her pocket. The City took enough money out of her pocket, and the money they had was mismanaged.

She said literature was distributed last year during a District 1 outreach meeting on the number of roads and where the money was going. She said she did not like the idea of giving each Commissioner $800,000 for neighborhood enhancement improvements and did not want that included in the improvement plan. She said she did not like the Park of Commerce improvements being lumped into a road plan. If a business wanted to come to the City, then they should pay for the roads. The literature distributed did not do a good job in breaking down where the money was to be spent.

She suggested the City use the money it already had to fix roads. If the City took back the Community Development Agency (CRA) district, then the City would have all the money it needed to fix roads. She asked the City to do research on taking back the CRA before it stuck its hands into her pockets. She said there was no cap on how much money would be taken from her pocket. The bond was over 30 years; however, most roads lasted 20 years. She thanked the City for having the meeting, but said it was premature. The Commission owed the 50% plus voters to have scheduled a meeting prior to this one.

Mark Parrilla commented that he was glad professionals were attending this meeting and that bond interest rates were at a historical low.

Ginny Powell commented that an alternative to a bond was to seek grants. Grants could pay for a lot of the improvements. She said about 10% of projects were built using grant funds and it was worth investigating. Getting grant funds would require someone who knew how to find and get grants then follow up with the grant once received. She announced a Metropolitan Planning Organization meeting on January 29, 2015, to get grants. She suggested the City send staff to this meeting and said the deadline to submit for a grant was in February. She also suggested doing a smaller bond amount because everyone agreed that the roads needed to be repaired.

Michael Fox commented that he stood against the bond for several reasons, but through the 2014 district outreach meeting discussions, he changed his mind for a couple of reasons. In the north, there were civilian review boards for law enforcement. He suggested forming an ongoing group of civilians to provide oversight and to make the issue more palatable to citizens. The group could meet quarterly on the bond for the purpose of watching the debt, but not providing suggestions to the Commission. A civilian review board could be more acceptable to people who were opposed to the bond.

Jeffrey Morgan commented that the process for finding information was deceptive. He said he spent tens of thousands of dollars on his properties and suggested using usage, impact, or frontage footage as a way to make everyone pay for the improvements. He asked if the bond was a done deal or if it could be modified to make it more fair and palatable. Anything the City did to penalize the people who took care of their property would fight this issue. He said he lived in Lake Worth for 55 years and was willing to pay, but would not pay for the slum lords.

Marcus Kelly suggested the City sell its golf course.

Sam Goodstein thanked the City for starting the process and educating the populace. He said the Lake Worth 2020 Plan was very good and should be brought forward again in the same form. He suggested that next time, the supporters would win. He said his family owned Holt's Lazyland Mobile Home Park and was one of the largest taxpayers in the City on property located south of 6th Avenue South. He said his family expected to benefit from the improvements of the City for decades to come, and they were willing to pay.

Bill Hoffman commented that the interest rate on municipal debt was low. He asked if the projects could be done in phases using several bonds, if the projects could be done in specific areas, and how equitably would the debt be applied.

John Rinaldi said he was against the bond the moment the Commission said

his taxes would increase. The business community was hurting and there was not a lot of foot traffic. For every dime businesses had to pay, they suffered more. He asked what the City would do with $64 million. He said he heard that the City would do wonderful things with the money and was offering everyone wonderful projects instead of giving the citizens what they needed. He commented that he was being asked to approve a "fancy plan" and give money to neighborhoods for street calming. Citizens needed to know what projects were needed now.

He said the concept was that, if roads were being torn up, then do all the improvements at once because it was cheaper. He asked the City to tell him what was needed and what it would cost. He said there were aspects of the financing that he did not like and did not like giving the Commission carte blanch to use the money. He asked for the bond to be very specific on which projects would be done and for what amount. He asked if the citizens would be guaranteed that the money would be used for specific projects instead of having projects listed in Phase 1 or Phase 2. Once he gave the City $64 million, then it would be the City's. There was a trust issue. A large amount of cash was coming into the City, which was not used to fix roads or buildings. The City had millions of dollars to use. As a citizen, he said he had to deal with Commission and City Manager trust issues to do the right thing. If a new Commission came in then they could hire a new City Manager. At the next election, he said he wanted to hire new Commissioners to hire a new City Manager.

The proposed bond was for 30 years. If a new Commission or City Manager was in power, then that would provide a new dynamic. He said he was told that the bond covenant would legally guarantee the work was done. He asked everyone to remember that anytime someone asked people for more money, it would change the economics of the City. He asked the City to do the improvements in phases and only borrow money for those phases. After that, then the people could ask if they trusted their government and the City Manager. Businesses competed with West Palm Beach, and those businesses did not pay the same tax or electric rates that he did. Property values were increasing and if given enough time, the tax money would come in and the City would not have to hit people with a higher tax rate. He asked if the City needed $64 million.

John Adaire asked how much money the stormwater tax brought in. He said there was a 6-7% gas tax imposed during the depression which took Lake Worth out of bankruptcy. He asked how much gas tax the City received and what was done with the money.

Commissioner Szerdi arrived at the meeting; the time being 6:46 PM.

City Manager Bornstein replied that he would get an answer for Mr. Adaire.

Elise LaTorre said she heard many good points. Before the City came to her for more money, she asked if the City was doing everything in its power to be good stewards of her money. There was a lot of crime and slum lords in the City. She asked for Code Enforcement to crack down. There were hundreds of people renting their properties without paying a bed tax or rental license. She said there was a need to look at what revenues were "sitting on the table."

Commissioner Amoroso explained that the golf course properties were deeded to the City. If the City used those properties for something other than its intended use, they would revert back to the original owners or their heirs.

Joe Egly commented that because of the market in the past, his property value went down so he had to rent his condominium unit. He said he heard many good ideas; however, the golf course property deeds had reverter clauses. When he was a Commissioner in 2006, he said he was attune to the water and electric and saw the City's infrastructure pipes splintered. He said he did not know how many miles of pipes there were, but there were thousands of pipes that were patched. This was the best time to get a debt because of the low interest rates. Revenue came into the City, but then it went out for human resources. The City could go after grants, assessments, and non ad-valorem taxes. Property values were going up, but not a lot of money was coming into the City. Code Enforcement Inspectors were out every day and were working hard to keep up with the slum lord issues.

Tammy Pansa said everyone was in agreement about the need to fix roads, but were sitting on the fence about the issue. She asked for backup material on the issue and how the City came up with the $64 million amount. People were interested in the subject. She said she wanted to share the backup material and suggested it be uploaded to the City's website. There was a need to know about all of the pieces that made up the $64 million in detail and to put that information on the City's website. The Commission was doing a great job, Code Enforcement was improving blight, and more rental licenses were being issued; however, she said she did not know about these until she asked. She suggested information on licenses also be uploaded to the City's website. She said she wanted to see more advertisement, signage, and use of the billboard to get people from I-95 to visit Lake Worth.

Mayor Triolo thanked everyone for speaking and said she was grateful to everyone who attended the meeting. Discussion with staff and the public about the infrastructure plan was first called Roadway and Utilities Master Plan (RUMP), then changed to Lake Worth 2020. One of the biggest problems was that the City did not have "shovel ready" projects to submit for grant funds. A lot of communities did have "shovel ready" projects years ago, and they received grant funds. Empirical data about the infrastructure needs was recently done.

As a resident, she said she could not personally be hit up for more money. She asked what the worst first projects were? Were they the roads that were never paved or the roads that had no sidewalks or infrastructure? Were they the roads that had potholes? Was the worst first projects the ones that affected those in attendance or their neighborhood?

City staff come before the Commission 2.5 years ago with a wish list valued at $200 million. Over time, projects were eliminated and the debt amount reduced to $64 million. The plan included $800,000 in neighborhood enhancements for each community to decide on what they needed. The City was trying to do what needed to be done. Everyone needed to come together and decide how to fund the improvements. Experts gave the City empirical data.

She commented that she was against a fire service assessment because the funds would go towards paying pensions, which could not be done. Attorneys had said that, legally the City could not do a road assessment based on acreage. This discussion had been ongoing for years. She said she and City staff were members of the Metropolitan Planning Organization (MPO), and they were taking advantage of every opportunity to seek grant funds. She had state and federal legislators tour the City and were shown Lake Worth's need for money. She advised that the Park of Commerce was on the MPO's long range transportation plan to receive grant money. If the community wanted to eliminate the $800,000 in neighborhood enhancements, then it could be removed. The City had one federal and one state lobbyist working to seek grant funds. The City had been laying out the foundation, through multiple ordinances, to improve code enforcement.

Attorney Heather Encinosa, Nabors Giblin & Nickerson, commented that she heard a lot of good ideas to fund the infrastructure. From a legal standpoint, she said the City could fund road improvements through an assessment, but that would not mean that every property would pay the same nor did it mean that every property would pay any assessments. She said special assessments were suited for neighborhoods and not for passerby traffic. The improvement had to benefit a specific property, and the assessment amount was equally proportionate to the benefit received.

She explained that a non ad-valorem tax was the same as a special assessment, but collected through the tax bill. A fire hydrant or fire protection service assessment was used all over the state, but Lake Worth was already funding those services through a Municipal Services Taxing Unit (MSTU). To impose an assessment to pay for pensions would be an issue because it had to benefit a property.

She explained that imposing a special assessment for police would not be legally defensible because police provided a community benefit and not

specifically a property benefit. A special assessment for fire hydrants, water, and sewer needed to be researched followed by determining how to best proportion the assessment amount to each property. She explained that the amount of an assessment was not based on property value. The front footage method could be used for a road assessment, and the most common method was trip generation to determine the Equivalent Residential Units (ERU) amount.

Jay Glover, Public Financial Management, said he was the City's advisor on debt related matters. He explained that special assessments were legal under certain situations; however, one issue he said he wanted to raise was the ability to use assessments to secure debt, which was problematic. He commented that he was not stating that securing debt using assessments was impossible, but it would depend on the underlying credit of those individuals and businesses paying those assessments.

He explained that the financing market would look at the underlying properties to assess their ability to pay the assessments. Given the makeup of the City, he said it would be difficult, if not impossible to secure financing solely with special assessments. Many special assessments that were done had some type of credit support behind them like a General Fund Preference support, covenant, or budget which may or may not be feasible given the City's General Fund situation. He said that, while assessments were legal to finance the types of projects included in the Lake Worth 2020 Plan, he wanted to caution the City that the feasibility to get financing by those assessments would be difficult.

He commented that he was not saying "yes" or "no" until the properties being assessed and the credit quality of those properties were looked at in order to determine if a loan, bank, or capital market would give the City money.

City Manager Bornstein said all of the ideas heard would be gathered and a follow up meeting was already scheduled to look at whether the ideas provided were possible and legal.

Vice Mayor Maxwell commented that assessments were possible, but the City may not be able to secure a debt. He asked if there would be lawsuits if assessments were imposed.

Attorney Encinosa replied that, if there was a big assessment-backed bond issue that had a backup covenant, a validation procedure could go to the Courts to get "a blessing" for the life of the bond.

Mayor Triolo read the comment card written by Michael Flack. Mr. Flack wrote asking what the City's credit rating was.

City Manager Bornstein replied that the City had no General Fund debt

therefore, it had no bond credit rate.

Mr. Glover explained that the City had no credit rate. Staff used an assumption when the City went out for a bond referendum.

City Manager Bornstein advised that the City was climbing out of a deep financial hole. The Fiscal Year 2015 budget was patched together using one time revenue the City received. He encouraged everyone to attend the budget work sessions to hear how the City's various funds operated. He said the City was not financially solvent, but it was turning around.

Mayor Triolo read Joseph Furner's comment card. Mr. Furner wrote suggesting the use of alternative ways to fix infrastructure, [impose] no new taxes or bonds, prioritize the needs in the City, and give the City time. [He wrote that] house values were going up [and the City would receive] more taxes. [He suggested] applying for state and federal grants for the City to get funding and taking back the Community Redevelopment Agency. [He wrote that] based on the last mission, there was still way too much blight and crime after 20 plus years, and he did not want or like having a bond. [He wrote asking] to fix all dirt roads and missing sidewalks first and tax landlords more. With so many rentals, 70% in the City, let rental property owners pay more. [He wrote suggesting] making all non-homestead rental properties pay more tax and ad valorem tax and, most importantly, to listen to the citizens and clean up blight and crime first.

City Manager Bornstein replied that rental property owners already paid more in taxes than homesteaded property owners.

Mr. Glover said the City could do a hybrid: 1) an assessment, 2) General Fund, and 3) General Obligation Bond. Each of the three would have different interest rates. The City would receive the lowest interest rate with a General Obligation Bond.

Mayor Triolo read the comment card written by Phil Materio. Mr. Materio wrote asking what would happen to property [located] on county and state roads like Dixie and Federal Highways.

City Manager Bornstein replied that county and state agencies did their own improvements because the roads were not owned by the City.

Mayor Triolo commented that the Metropolitan Planning Organization was looking to improve Dixie Highway between 10th Avenue North and 6th Avenue South.

Mayor Triolo read the comment card written by Katie McGiveron. Ms. McGiveron wrote suggesting the City sell some of its surplus and foreclosed

properties.

City Manager Bornstein replied that the City owned a lot of property. There were 26 foreclosed properties owned by the City having a combined market value of $500,000.

Mayor Triolo read the comment card written by Thomas Yacura. Mr. Yacura wrote asking what would happen when the City could not meet the payments for the General Obligation Bond.

Mr. Glover replied that the City would be in default of its bond if it could not meet the payments. A General Obligation Bond was backed by ad valorem taxes, and the City's millage rate would change to pay for the bond debt.

Commissioner Szerdi said everyone was looking for a fair way to pay for the improvements. A number of roads were never paved while others had the least amount of property values adjacent to them. The Commission relied on staff and consultants for data, which could be available on the City's website. There may be a hybrid formula and it was daunting to find a way to present the information to citizens. No one wanted to pay more in taxes. The City was trying to find something fair and was looking at all options, with many options being brought forward before. The experts were present to discuss the probability of the options.

Mr. Glover commented that interest rates were at their historic low and this was the time to borrow. The Lake Worth 2020 projects were scheduled in phases because of government regulations on how quickly the City had to spend the proceeds. The full debt service amount would not be drawn all at one time. Phasing was a good idea to draw down amounts as needed. He said State law limited the referendum ballot language to a 75 word summary and 15 word title.

City Manager Bornstein explained that the bond covenant document and resolution would contain the list of projects. If the list changed, it would have to go back to the Commission for approval.

Mr. Glover said the bond funds could only be used for infrastructure improvements. The resolution could be drafted, for public review, prior to the issue going to a referendum election. The bond's projects would be listed along with the maximum amount and terms.

Mark Parrilla asked what assurance did the public have that the projects listed would not be changed by future Commission.

Mr. Glover replied that any Commission, whether current or future, could modify the project list.

Robert Waples asked if the City was obligated to use all of the bond money.

Mr. Glover replied that the proceeds would be drawn down as needed. There could be some prepayment penalties.

Mayor Triolo said if grant funds were received, there was nothing requiring the City to use all of the bond proceeds.

Ginny Powell said the millage rate could increase if property values crashed again in order to meet the bond debt obligation over the next 30 years.

Mayor Triolo replied that the City could stop drawing on the bond proceeds at any time.

Commissioner McVoy commented that he was glad everyone came out to the meeting. He said he agreed with many of the comments about restricting this meeting to just financing. He asked why the August referendum vote was split 50-50. He said there was an issue with trust and other issues with Lake Worth such as crime and blight. He asked if putting money into roads was the best use of the money. There was a need to listen to the community on what would bring this community up. He said it bothered him that, in the course of the 2014 outreach meetings, the public was told that the City could not do special assessments and now were being told that they could. He said he heard that there were challenges to imposing special assessments. If something was difficult, then he suggested spending money to find a procedure to impose an assessment. He asked why the City would not tell people exactly what was in the bond covenant. He asked if there was absolutely no legal way for a stable document to be prepared that included a list of projects. He asked if it was impossible to “nail the City down.”

Assistant City Attorney Goddeau replied that the City was limited to the amount of language in a referendum ballot question which would bind the City in the future. A resolution, which included the list of projects, could be changed.

Commissioner McVoy commented that there could be a document prepared which had no language limitation.

Assistant City Attorney Goddeau explained that the Commission could act either by ordinance or resolution, which could always be changed. The only way to bind future Commissions was by a referendum. She said a list of projects could not be created into a bond referendum. The bond referendum bound the future.

Attorney Encinosa replied that the City could be bound through a ballot referendum, but was limited to the number of words in the language.

Commissioner McVoy asked if it was possible for the City to move away from the 75 word limit in the summary.

Mayor Triolo said the City provided an unlimited amount of language through the backup material provided over the past 2.5 years.

Katie McGiveron asked if $20 million could be borrowed followed by another $20 million.

Mr. Glover commented that it would be difficult to secure debt which was solely paid by assessments.

Vice Mayor Maxwell said the Commission spoke about imposing assessments as a funding source over the past several years. Every project was laid out on a schedule with the dollar amount fixed to it. This information was available on the City's website public domain for a long time. The bond covenant would include projects, which could not be changed by future Commission.

4. ADJOURNMENT:

Consensus: To adjourn the meeting at 8:24 PM.

PAM TRIOLO, MAYOR

ATTEST:

PAMELA J. LOPEZ, CITY CLERK

Minutes Approved: February 17, 2015

A digital audio recording of this meeting will be available in the Office of the City Clerk.

MINUTES
CITY OF LAKE WORTH
CITY COMMISSION SPECIAL MEETING
FEBRUARY 3, 2015 – 4:15 PM

The meeting was called to order by Mayor Triolo on the above date at 4:21 PM in the City Manager's Office, located at 7 North Dixie Highway, Lake Worth, Florida.

1. ROLL CALL:

Present were Mayor Pam Triolo; Vice Mayor Scott Maxwell; and Commissioners Christopher McVoy (absent for the roll call but arrived later), Andy Amoroso, and John Szerdi (absent for the roll call but present via telephone sometime during the meeting). Also present were City Manager Michael Bornstein, City Attorney Glen Torcivia, and City Clerk Pamela Lopez.

2. CITY ATTORNEY ANNOUNCEMENT:

City Attorney Torcivia announced that, pursuant to Section 286.011(8) Florida Statutes, he desired advice concerning pending litigation in the case OF Clear Channel versus City of Lake Worth, Case No. 502011CA005726XXXXMB.

He announced the following individuals would be in attendance: Mayor Triolo; Vice Mayor Maxwell; Commissioners McVoy, Amoroso, and Szerdi; City Manager Bornstein; himself; and a Court Reporter.

3. MAYOR ANNOUNCEMENT:

Mayor Triolo announced that pursuant to Section 286.011(8) Florida Statutes, the City Commission was commencing a closed door attorney-client session for the purpose of discussing the pending litigation. The estimated length of the session was approximately one hour.

4. RECESS:

Mayor Triolo recessed the meeting at 4:22 PM.

5. RECONVENE:

Mayor Triolo reconvened the meeting at 4:59 PM.

6. ADJOURNMENT:

Action: Motion made by Vice Mayor Maxwell and seconded by Commissioner Amoroso to adjourn the meeting at 4:59 PM.

Vote: Voice vote showed: AYES: Mayor Triolo; Vice Mayor Maxwell; and Commissioners McVoy, Amoroso, and Szerdi. NAYS: None.

_____
PAM TRIOLO, MAYOR

ATTEST:

_____
PAMELA J. LOPEZ, CITY CLERK

Minutes Approved: February 17, 2015

MINUTES
CITY OF LAKE WORTH
REGULAR MEETING OF THE CITY COMMISSION
FEBRUARY 3, 2015 – 6:00 PM

The meeting was called to order by Mayor Triolo on the above date at 6:00 PM in the City Commission Chamber located at City Hall, 7 North Dixie Highway, Lake Worth, Florida.

1. ROLL CALL:

Present were Mayor Pam Triolo; Vice Mayor Scott Maxwell; and Commissioners Christopher McVoy (arrived at 6:01 PM), Andy Amoroso, and John Szerdi (arrived at 6:01 PM). Also present were City Manager Michael Bornstein, City Attorney Glen Torcivia, and City Clerk Pamela Lopez.

2. INVOCATION:

The invocation was offered by Pastor Ray Stenersen, Apostolic Lutheran Church of Lake Worth.

Commissioners McVoy and Szerdi arrived at 6:01 PM.

3. PLEDGE OF ALLEGIANCE:

The pledge of allegiance was led by Commissioner Christopher McVoy.

4. AGENDA - Additions/Deletions/Reordering:

Action: Motion made by Vice Mayor Maxwell and seconded by Commissioner Szerdi to approve the agenda as submitted.

Commissioner McVoy requested Consent Agenda Items A and C be reordered to New Business for discussion.

Vote: Voice vote showed: AYES: Vice Mayor Maxwell and Commissioners Amoroso and Szerdi. NAYS: Mayor Triolo and Commissioner McVoy.

Action: Motion made by Vice Mayor Maxwell and seconded by Commissioner Szerdi to reconsider the item.

Vote: Voice vote showed: AYES: Mayor Triolo; Vice Mayor Maxwell; and Commissioners McVoy, Amoroso, and Szerdi. NAYS: None.

Action: Motion made by Commissioner Szerdi and seconded by Commissioner McVoy to waive the rules to:

- Reorder Consent Agenda, Item A to New Business as Item B – Resolution No. 07-2015 amend the City's Canvassing Board;
- Reorder Consent Agenda, Item C to New Business as Item C – Contract with the Florida Department of Corrections for use of inmate labor to provide landscape duty services; and
- Approve the agenda as amended.

Vote: Voice vote showed: AYES: Mayor Triolo; Vice Mayor Maxwell; and Commissioners McVoy, Amoroso, and Szerdi. NAYS: None.

5. PRESENTATIONS:

A. Proclamation declaring March 2015 as Ethics Awareness Month

Mayor Triolo read a proclamation declaring March 2015 as Ethics Awareness Month.

Commissioner Szerdi announced that all elected officials were required to take four hours of ethics training annually and that all advisory board members were also required to take ethics training.

B. Planning and Zoning Board update

Greg Rice, Chairperson, provided an update on the number of meetings scheduled since the Board's last update to the Commission, explained the members' powers and duties, provided a summary of the members' decisions made between September 2014 through January 2015, and provided the status of development projects. He introduced two Planning and Zoning Board members that were present.

6. COMMISSION LIAISON REPORTS AND COMMENTS:

Vice Mayor Maxwell: thanked the people for attending the City's January 27, 2015, public meeting, said he heard many ideas about financing infrastructure projects, and people were passionate about creative funding. He said one suggestion was to sell the City's golf course. He explained that the City could not sell the golf course and that there was a need to make that clear to everyone because a newspaper article said that selling the golf course was an option. He said he met with a member of Governor Scott's team about bringing the Governor on a tour of the Park of Commerce in mid-March. This visit would dovetail a tour of the City with Senator Latvala for a $7.5 million appropriation request made to the State for infrastructure funds. He said a special report would be prepared for the Governor's visit. He advised that when developed, the potential impact of the Park of Commerce, based on square footage, could be the creation of 5,000 jobs. He asked the City Manager to invite realtors to listen to the same

presentation made several months ago to architects and engineers about the City's Land Development Regulations.

Commissioner McVoy: said he was happy to hear that other funding mechanisms to finance the Park of Commerce improvements were being considered and that the City should keep going in that direction. He said he had concerns about asking residents to find ways to fund infrastructure projects during the January 27, 2015, Commission Work Session. There was a lot of community support on the need to do the work, but not how to fund it. He said there was a trust issue. He commented that he and Commissioner Szerdi attended four hours of ethics training, the training was helpful, and City Attorney Torcivia was a featured speaker. He commented that he was invited to a Fair and Impartial Policing meeting with County Commissioners and Palm Beach Sheriff's Office personnel and there would be ongoing related workshops on the issue.

Commissioner Amoroso: said he explained during the January 27, 2015, Commission Work Session that selling the golf course was not an option to fund the City's infrastructure plan; however, a newspaper article stated that the sale was an option. He commented that he made it very clear that there was no option to sell the golf course. He announced his attendance at the Villages of Lake Worth ribbon cutting ceremony. He said that last year the Community Redevelopment Agency and Department of Community Affairs received grant fund for the Family Night Movies events; however, this year they did not receive grants. He said donations for this event were being accepted. He announced that volunteers were still needed for the Street Painting Festival, the City would be participating in new business ribbon cutting ceremonies, announced Mama Gigi's Restaurant just opened, and said Aioli Restaurant wanted to locate in Lake Worth but could not find a place so they moved to West Palm Beach.

Commissioner Szerdi: announced that he participated in a clean up event on South B, C, and D Streets and in the Pineapple Beach neighborhood area; said the Outdoor Show was moving from the Cultural Plaza to the beach; and cited several upcoming events scheduled. He said the City had always been actively pursuing grants for the Park of Commerce, but the City had no master plan in place to receive grants. He commended staff and the City Manager for getting the master plan in order. He commented that he walked along Golfview Road and spoke to many individuals who were confused about the City selling the golf course. He said the City was not selling its golf course. He commented that he would pledge $500 towards the Family Night Movies events.

Mayor Triolo: commented that she missed the last Commission meeting due to a death in her family.

7. PUBLIC PARTICIPATION OF NON-AGENDAED ITEMS AND CONSENT AGENDA:

The following individuals spoke on various issues; however, they did not write anything on their comment cards: Pam Bergsma, Peggy Fisher, Katie McGiveron, Peter Timm, Greg Rice, and Anthony Marotta.

Comments/requests summaries:

1. Commissioner McVoy commented that there were a number of ways to fund the Lake Worth 2020 infrastructure projects including ad valorem, General Obligation Bond, and non ad-valorem tax; and the City should keep all of its options open.

2. Vice Mayor Maxwell commented that when he was a Commissioner in 2001, the then Commission voted to no longer serve as Community Redevelopment Agency (CRA) members, which he voted against. He commented that, over the years, he had hinted about readdressing the CRA's district and about the Commission serving again as its members. He advised that even if the Commission served as its members, the City was still obligated to pay their debt.

3. Vice Mayor Maxwell commented that it was possible to fund the Lake Worth 2020 infrastructure projects through assessments; however, he learned during the January 27, 2015, Commission Work Session that banks may not lend money to the City and that the City could be sued by someone.

8. APPROVAL OF MINUTES:

Action: Motion made by Commissioner Szerdi and seconded by Vice Mayor Maxwell to approve the following minutes as submitted:

A. City Commission Meeting – January 20, 2015

Vote: Voice vote showed: AYES: Mayor Triolo; Vice Mayor Maxwell; and Commissioners McVoy, Amoroso, and Szerdi. NAYS: None.

9. CONSENT AGENDA:

Action: Motion made by Vice Mayor Maxwell and seconded by Commissioner Szerdi to approve the Consent Agenda, less Items A and C.

A. (Reordered to New Business as Item B) Resolution No. 07-2015 – amend the City's Canvassing Board

B. Variance Agreement with Michael Paul Lewis to allow brick pavers on a driveway, walkway and City right-of-way at 516 North L Street

C. (Reordered to New Business as Item C) Contract with the Florida Department of Corrections for use of inmate labor to provide landscape duty service

D. Restrictive Covenant for the Community Redevelopment Agency's cultural facilities grant

E. General Release Agreement with Jaclyn Wagman and Jason Shultz

Vote: Voice vote showed: AYES: Mayor Triolo; Vice Mayor Maxwell; and Commissioners McVoy, Amoroso, and Szerdi. NAYS: None.

10. PUBLIC HEARINGS:

A. Ordinance No. 2015-02 – First Reading and First Public Hearing – amend the Comprehensive Plan to include a water supply plan and amend various elements and schedule the second public hearing date for March 17, 2015

City Attorney Torcivia read the following ordinance by title only:

ORDINANCE NO. 2015-02 OF THE CITY OF LAKE WORTH, FLORIDA, ADOPTING A COMPREHENSIVE PLAN TEXT AMENDMENT BY INCORPORATING A WATER SUPPLY PLAN AND AMENDING THE FUTURE LAND USE ELEMENT, INFRASTRUCTURE ELEMENT, COASTAL MANAGEMENT ELEMENT, CONSERVATION ELEMENT, INTERGOVERNMENTAL COORDINATION ELEMENT AND CAPITAL IMPROVEMENTS ELEMENT; PROVIDING FOR SEVERABILITY, CONFLICTS AND AN EFFECTIVE DATE.

Action: Motion made by Commissioner Amoroso and seconded by Vice Mayor Maxwell to approve Ordinance No. 2015-02 on first reading and schedule the second public hearing date for March 17, 2015.

Larry Johnson, Water Utility Director, explained that this ordinance amended the Comprehensive Plan text to incorporate a water supply plan and amended the future land use element, infrastructure element, coastal management element, conservation element, intergovernmental coordination element, and capital improvements element.

Mayor Triolo announced that this was the time for public comment. No one from the public commented.

Vote: Voice vote showed: AYES: Mayor Triolo; Vice Mayor Maxwell; and Commissioners McVoy, Amoroso, and Szerdi. NAYS: None.

11. UNFINISHED BUSINESS:

There were no Unfinished Business items on the agenda.

12. NEW BUSINESS:

A. Ordinance No. 2015-03 – First Reading – amend Chapter 18 to address all City utilities with specific provisions for water, sewer and stormwater and schedule the public hearing date for February 17, 2015

City Attorney Torcivia read the following ordinance by title only:

ORDINANCE NO. 2015-03 OF THE CITY OF LAKE WORTH, FLORIDA, DELETING CHAPTER 18, "WATER AND SEWERS", AND ADOPTING A NEW CHAPTER 18, "UTILITIES" TO SET FORTH THE ADMINISTRATIVE AND REGULATORY REQUIREMENTS OF THE WATER, SEWER, STORMWATER AND ELECTRIC UTILITY SYSTEMS; AMENDING CHAPTER 2, "ADMINISTRATION", ARTICLE 1, "IN GENERAL", SECTION 2-10, "LIEN OF UTILITY SERVICE CHARGES"; DELETING ARTICLE I, "USE OF STORMWATER SYSTEM" FROM CHAPTER 12, "HEALTH AND SANITATION"; PROVIDING FOR OTHER PURPOSES, SEVERABILITY, CONFLICTS, CODIFICATION AND AN EFFECTIVE DATE

Action: Motion made by Vice Mayor Maxwell and seconded by Commissioner Amoroso to approve Ordinance No. 2015-03 on first reading and schedule the public hearing date for February 17, 2015.

Larry Johnson, Water Utilities Director, explained that an annual rate increase from around the country was about 3% per year. He said, compared to the surrounding utility companies, the City's rate was in the middle of the pack. He explained in detail about the two-inch water pipe replacement improvements being paid with the rate increase funds. He announced that a house burned down last week because there was no fire hydrant in the area.

Mayor Triolo announced that this was the time for public comment. No one from the public commented.

Vote: Voice vote showed: AYES: Mayor Triolo; Vice Mayor Maxwell; and Commissioners McVoy, Amoroso, and Szerdi. NAYS: None.

B. (Formerly Consent Agenda, Item A) Resolution No. 07-2015 – amend the City's Canvassing Board

City Attorney Torcivia did not read the following resolution by title only:

RESOLUTION NO. 07-2015 OF THE CITY OF LAKE WORTH, FLORIDA, AMENDING THE CITY'S CANVASSING BOARD; AND PROVIDING AN EFFECTIVE DATE.

Comments/requests summaries:

1. Commissioner McVoy suggested the Internal Auditor or Finance Director serve on the Canvassing Board instead of the Community Redevelopment Agency (CRA) chairperson.

2. Commissioner Szerdi commented that he would support the Internal Auditor serving on the Canvassing Board instead of the CRA chairperson.

3. City Attorney Torcivia commented that he would ask a retired judge to serve on the Canvassing Board.

4. Vice Mayor Maxwell suggested asking either a retired judge or an attorney with a Constitutional law background.

Action: Motion made by Commissioner Amoroso and seconded by Commissioner Szerdi to amend the Canvassing Board composition to include the City Clerk, Internal Auditor, and either a retired judge or attorney with Constitutional knowledge; and approve amended Resolution No. 07-2015.

Mayor Triolo announced that this was the time for public comment. No one from the public commented.

Vote: Voice vote showed: AYES: Mayor Triolo; Vice Mayor Maxwell; and Commissioners McVoy, Amoroso, and Szerdi. NAYS: None.

C. (Formerly Consent Agenda, Item C) Contract with the Florida Department of Corrections for use of inmate labor to provide landscape duty service

Comments/ requests summaries:

1. Commissioner McVoy asked if there was any constraints to increasing the contract amount and use the inmate labor to clear vacant and abandoned properties.

   Jamie Brown, Public Services Director, replied that the City could use the services wherever the City needed them. The contract included five inmates and one supervisor. If vacant and abandoned properties were added to the scope of work, then more crew members would be needed.

City Manager Bornstein recommended the Commission approve the contract to give staff time to review the request and come back with a response.

2. Commissioner Amoroso suggested abandoned property owners be identified through the use of the code enforcement process to determine if there were any code violations.

Action: Motion made by Vice Mayor Maxwell and seconded by Commissioner Amoroso to approve Contract #WS965 in an amount not to exceed $57,497 between the Florida Department of Corrections and the City of Lake Worth.

Mayor Triolo announced that this was the time for public comment.

Peggy Fisher asked if the Department of Corrections had another inmate crew to service Lake Worth. She said there would be a need for more supervision because of the additional work. She suggested purchasing and installing fire hydrants instead of using additional funds to hire more crew members.

Vote: Voice vote showed: AYES: Mayor Triolo; Vice Mayor Maxwell; and Commissioners McVoy, Amoroso, and Szerdi. NAYS: None.

13. LAKE WORTH ELECTRIC UTILITY:

A. PRESENTATION:

1) Update on the electric utility system

No update was provided.

B. CONSENT AGENDA:

There were no Lake Worth Electric Utility Consent Agenda items on the agenda.

C. PUBLIC HEARING:

There were no Lake Worth Electric Utility Public Hearing items on the agenda.

D. NEW BUSINESS:

There were no Lake Worth Electric Utility New Business items on the agenda.

14. CITY ATTORNEY'S REPORT:

City Attorney Torcivia did not provide a report

15. CITY MANAGER'S REPORT

A. February 17, 2015 – draft Commission agenda

City Manager Bornstein introduced Nerahoo Hemraj as the new Finance Director.

16. ADJOURNMENT:

Action: Motion made by Vice Mayor Maxwell and seconded by Commissioner Szerdi to adjourn the meeting at 7:45 PM.

Vote: Voice vote showed: AYES: Mayor Triolo; Vice Mayor Maxwell; and Commissioners McVoy, Amoroso, and Szerdi. NAYS: None.

_____
PAM TRIOLO, MAYOR

ATTEST:

_____
PAMELA J. LOPEZ, CITY CLERK

Minutes Approved: February 17, 2015

A digital audio recording of this meeting will be available in the Office of the City Clerk.

CITY OF LAKE WORTH

7 North Dixie Highway · Lake Worth, Florida 33460 · Phone: 561-586-1600· Fax: 561-586-1750

AGENDA DATE: February 17, 2015, Regular Meeting **DEPARTMENT:** Public Services

---

EXECUTIVE BRIEF

TITLE:
Agreement with Cedars Electro-Mechanical, Inc. to replace the chiller unit (AC unit) at the Public Safety Complex.

SUMMARY:
This Agreement will authorize the replacement of an existing chiller unit that has reached the end of its useful life.

BACKGROUND AND JUSTIFICATION:
The existing chiller unit has reached the end of its useful life and the Public Services Facilities staff have performed constant maintenance on this unit to keep it running. The unit has been inspected by qualified personnel and deemed necessary for replacement in the near future. Additionally, new valves, meters, and piping will be installed for a complete chiller unit that is certified and reliable. The unit has a 5 year warranty included.

The Contractor was selected from a total of 8 proposers based on the RFP process. This Contractor presented the best value to the City and was selected to perform the work.

MOTION:
I move to approve / disapprove an agreement with Cedars Electro-Mechanical, Inc. for the removal and replacement of the existing chiller unit at the Public Safety Complex.

ATTACHMENT(S):
Fiscal Impact Analysis
Cedars Electro- Mechanical, Inc. – RFP submittal
Agreement

FISCAL IMPACT ANALYSIS

A. Five Year Summary of Fiscal Impact:

Fiscal Years	2015	2016	2017	2018	2019
Capital Expenditures	59,850.00	0	0	0	0
Operating Expenditures	0	0	0	0	0
External Revenues	0	0	0	0	0
Program Income	0	0	0	0	0
In-kind Match	0	0	0	0	0
Net Fiscal Impact	59,850.00	0	0	0	0
No. of Addn'l Full-Time Employee Positions	0	0	0	0	0

B. Recommended Sources of Funds/Summary of Fiscal Impact:

Public Services

Account Number	Account Description	FY2015 Budget	Project #	Pre Exp; Balance	Expenditure for this item	Post Exp; Balance
301-5062-531.65-62	Construction in Progress/Buildings	80,000.00	GV1507	80,000.00	59,850.00	20,150.00

C. Department Fiscal Review:

Cedars
Electro-Mechanical, Inc.

To: City of Lake Worth
Re: City Hall Chiller Replacement
RFP15-102

Letter of Transmittal

Cedars Electro-Mechanical, Inc. is a state certified mechanical, general and solar contractor located in Lake Worth, FL. As a locally nationally and state of Florida certified woman owned business and certified in Palm Beach County as a small business enterprise, Cedars Electro-Mechanical also maintains a drug free workplace, conducts weekly safety meetings and maintains a .90 workers compensation rating. Since 1990, Cedars Electro-Mechanical has specialized in complex mechanical systems for various governmental agencies locally and nationally. These agencies include Palm Beach County, School Board of Broward County, Palm Beach County School Board, Solid Waste Authority, and Okeechobee County, US Dept. of Labor, USCG, US Army, Army Corp of Engineers, US Air Force, US Navy, US Fish and Wildlife Agency.

Our staff, three mechanical engineers and one civil engineer, will develop a definitive scope of work from the plans and specifications, a schedule for purchasing the equipment, mechanical components and retain our subcontractors and vendors as required. This schedule is coordinated with the owners and their representatives to meet their needs and requirements and becomes our work schedule. To meet tight schedules and eliminate wasted time on the job, we prefabricate the piping prior to installation so we have everything ready to install. A preconstruction meeting will be conducted with key subcontractors to finalize the schedule and scope requirements.

In 2012, Cedars Electro-Mechanical replaced chillers at the Central Energy Plant that involved replacing the existing chilled water system and replacing it with four 650 ton Trane chillers, 12 pumps, 2 VFDs and chilled water piping to the existing system and controls. As you review our projects you will see our vast experience in chilled water systems for various governmental entities.

The scope of work includes the following:

1) Administrative requirements such as developing work schedule including procurements, permits and approvals. Coordinate schedule with owner and subcontractors.

1712 S. Dixie Highway • Lake Worth, FL 33460-5854 • 561-588-4088 • Fax 588-4087

CGC 058543 • CMC 053774

2) Simultaneously establish a laydown or storage area. Procure, deliver and store all project components prior to starting work. This includes implementing a demolition and disposal procedure. Coordinate with owner
3) At a time agreed to with the owner, start demolition and proceed with the replacement of the chiller, existing piping, valves, gases and accessories. Electrical and re-insulation work is to be coordinated accordingly. Upon completion of all testing and commissioning, return system to operational status. Coordinate with owner and its personnel. Estimate down time from start to finish will be no longer than 48-60 hours. Work force to be scheduled accordingly.

Ibrahim Chalhoub, mechanical engineer and operations manager of Cedars Electro-Mechanical, Inc., is the qualifier for Cedars Electro-Mechanical, Inc. with over 30 years of experience. He is also corporate secretary of Cedars Electro-Mechanical, Inc. His address is 2 Lakeside Palms Court, Lake Worth and his phone number is 561-762-9178. Debra Chalhoub is the president and office manager overseeing job costs, maintaining licenses, certifications, governmental forms, and accounting. She resides at 2 Lakeside Palms Court in Lake Worth and her phone number is 561-346-5321.

Sincerely,

Debra L Chalhoub

Debra Chalhoub
President

FINANCE OFFICE
7 North Dixie Highway · Lake Worth, Florida 33460 · Phone: 561-586-1674

Addendum No. 1
RFP 15-102

PUBLIC SAFETY COMPLEX CHILLER REPLACEMENT

Each recipient of this Addendum No. 1 to the Request for Proposal (RFP) who responds to the RFP acknowledges all of the provisions set forth in the RFP and agrees to be bound by the terms thereof. This addendum shall modify, clarify, change or add information and clarification and become part of the above referenced RFP.

CLARIFICATION:

1. **Electrical** - What is the breaker size feeding chiller?
   A: 300 AMP SQUARE D

2. **Electrical -** What size are the fuses inside the disconnect, if disconnect is fused?
   A: FUSES ARE 240V. FED WITH 300 MCM WIRE.

3. **Pumps -** Are pump specifications available from old prints or old paperwork for existing pump? (Need horsepower of motor, GPM and head feet of pump or at least the run load amps of pump motor) Structural
   A: 2 HP 3 PHASE MOTOR, 208/230V. GPM AND HEAD INFORMATION COULD NOT BE OBTAINED.

4. **Structural -** Is information available on size and depth of existing concrete piers supporting chiller? (Foot print of new chiller will most likely not match existing) INFORMATION will be needed for wind-load calculations, and structural drawings.
   A: EXISTING CHILLER IS SITTING ON A 7'X14' CONCRETE SLAB (4" THICK). THE CHILLER IS THEN MOUNTED TO 12" TALL X 18" LONG I-BEAMS AT EACH CORNER. THE I-BEAM CAN BE REUSED IF APPROVED BY BUILDING DEPARTMENT AND MEETS FOOTPRINT OF THE NEW CHILLER.

5. Is there currently a water make up station and air management components installed? And will they be reused?
   A: YES THIS DOES EXIST AND IT WILL BE REUSED.

6. Can scope of services be changed to include option of new chiller having factory installed pumps (2).
   A: THE CITY WOULD PREFER 2 PUMPS MOUNTED OUTSIDE THE CHILLER UNIT.

7. For items that don't have a part # (Exhibit G, page 32 of 39, "Belt SERP Grooved" but no specific item or part #. How does the city want us to address those?
   A: SEE ATTACHED TRANE SPEC SHEET

Exhibit A Items:

8. **Item 4** – Replacement of electrical conduits. During the site visit it was noted that the existing electrical safety switch must be replaced. The blades were not seating correctly, the bottom is badly rusted, and bottom penetrations are not sealed. Note this box contains a GFCI outlet for servicing the chiller as well.
   a) Will the City's electrical staff be replacing the outdoor disconnect switch during the chiller change-out, or will the scope of work be updated to include this device and the GFCI?

   A: CITY WILL REPLACE DISCONNECT BOX WITH BREAKER PANEL SO THIS IS NOT INCLUDED IN PROJECT SCOPE. CITY WILL PROVIDE THIS POINT OF SERVICE AND CONTRACTOR IS RESPONSIBLE FOR ALL ELECTRICAL WORK FROM THE NEW BREAKER PANEL TO PUMPS.

9. **Item 7** – Replacement of the water-flow proving switch.
   Will a switch internal to the chiller's microprocessor controls (item 8 below) be adequate, or will a secondary flow switch be required to meet this requirement? Secondary emergency shut-down contacts can be used as an additional level of safety if desired.

   A: A SECONDARY FLOW SWITCH WILL BE PREFERRED AND REQUIRED.

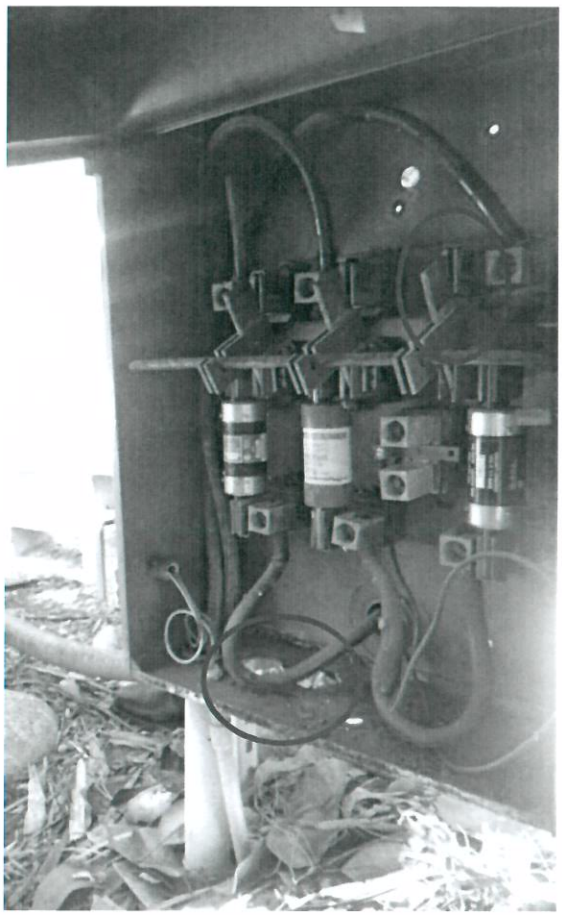

10. **Item 8** – Complete all necessary Piping connections.
We were not shown the fill-station/pressure reducing and back-flow prevention devices which are necessary for both function and cross contamination protection of the city water supply (item 13 on diagram below).

a) Is a functional fill station and pressure reducing/back flow prevention station present?
A: YES THIS IS STILL FUNCTIONAL AND WILL REMAIN.

b) Is an expansion tank present in the current piping design? (Item 2 below, shown within the chiller as part of the on-board pumping option).
A: YES AND THIS WILL BE REUSED.

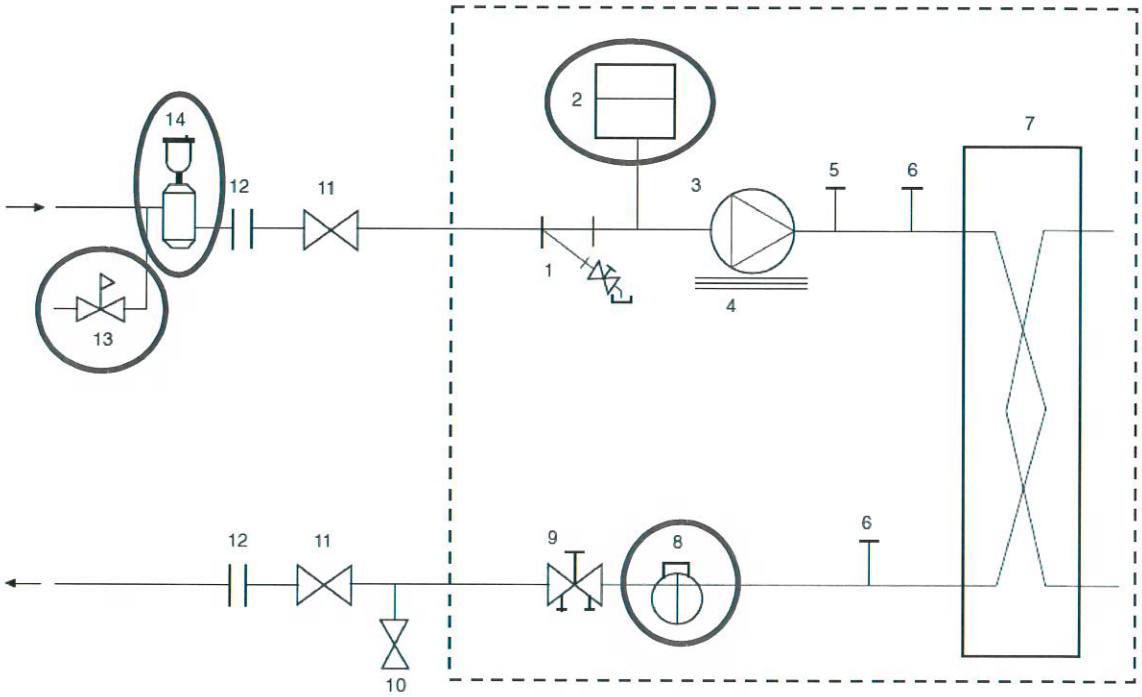

LEGEND

1 — Strainer/Blow-Down Valve
2 — Expansion Tank (sizes 010 - 060 only)
3 — Pump
4 — Electric Heater
5 — Air Vent Connection Port
6 — Pressure/Temperature Access Port
7 — Heat Exchanger
8 — Flow Switch
9 — Balance Valve/Drain Plug
10 — Pressure Relief
11 — Isolation Valves
12 — Flex Connections
13 — Pressure Reducing/Fill Valve
14 — Air Separator and Vent
--- Factory Supplied

11. **Item 16-H** – This statement indicates there is no chemical feeder. The chilled water system must be treated to protect your piping and heat-exchangers. Not having a pot feeder does not make it impossible to treat, it can be "dosed" during the refill process. Should chemical treatment be included in the Scope of Service? (Possibly pre-treatment because we will likely be draining the building to change the isolation valves).
    A: YES CHEMICAL TREATMENT AT TIME OF RE-FILLING WILL BE REQUIRED FOR THIS PROJECT.

12. **Item 16B** – include a second spare pump – Is the second pump that is to be provided simply a spare identical pump in a box, or is it to be mounted, piped and powered as part of a Primary-Spare pumping system?
    A: THE SPARE PUMP IS TO BE MOUNTED, PIPED AND POWERED INCLUDING THE ISOLATION VALVES. THE EXISTING ON-SITE PUMP IS TO BE REMOVED AND RETURNED TO THE CITY.

13. **Item 16G** - mentions "strainers" and "pumps" in plural, so this needs to be clarified. We did not look inside the current chiller, so I am unsure if there is appropriate electrical gear present to be powering the existing non-integral pump. The concern here is that there is not a separate electrical circuit for this pump, and just tapping it off the chiller's electrical circuit will be an issue for any electrical inspector. There are multiple solutions, but we need some direction on the base bid scope
    A: THE CITY WILL PROVIDE AS PART OF THE PROJECT A NEW BREAKER PANEL (REPLACING EXISTING DISCONNECT PANEL). THE CONTRACTOR WILL HAVE TO PIPE CONDUIT AND RUN WIRING / NECESSARY ELECTRICAL (STARTERS) TO PUMP LOCATIONS.

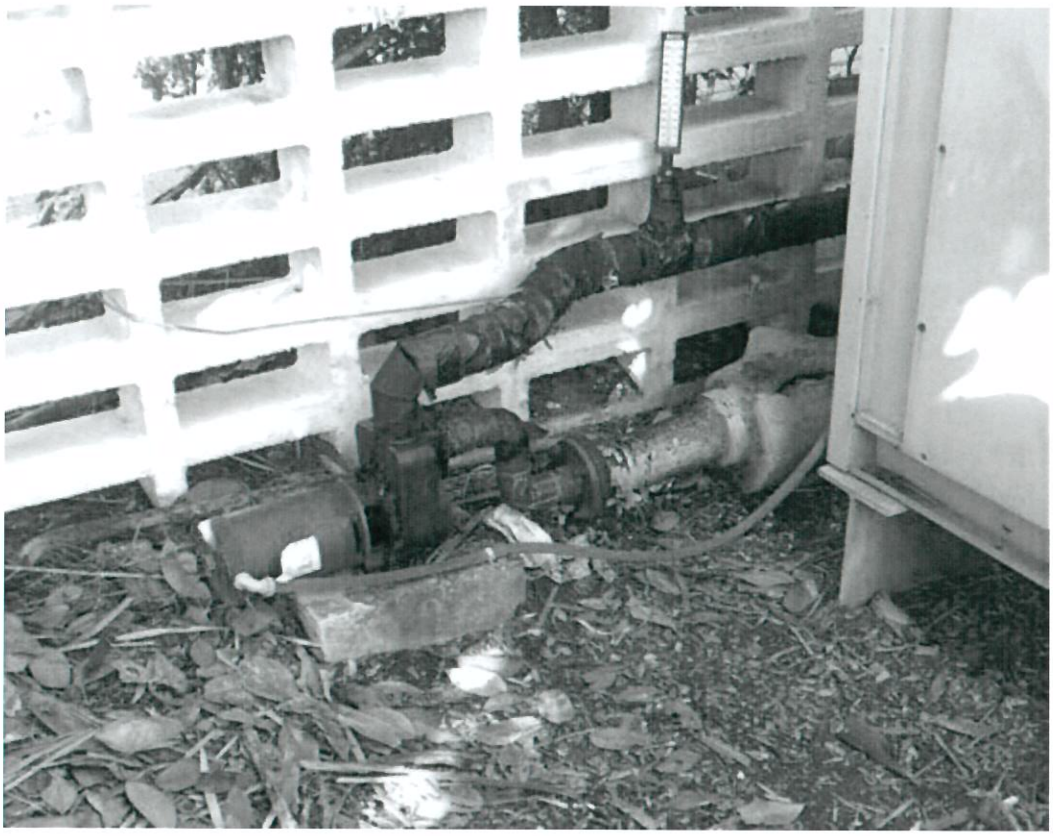

14. Chiller unit specifications:

Tag Data - Air-Cooled Scroll (Qty: 1)

Item	Tag(s)	Qty	Description	Model Number
A1	CGAM-1	1	Air-Cooled Chiller, Scroll Compressors	CGAM040A2

Product Data - Air-Cooled Scroll

Item: A1 Qty: 1 Tag(s): CGAM-1

Air-Cooled Scroll Packaged Chiller
Startup Included - Manufacturer must start equipment for warranty to be honored
40 nominal tons
208 volt 3 phases 60 hertz
High efficiency/performance
Full factory refrigerant charge (HFC-410A)
Refrigerant isolation valves (discharge valve)
Factory installed flow switch
Phase reversal protection
Standard factory ¾" thick insulation
Lanced aluminum fins
Across the line starter/direct on line
Single point power connection
Terminal block
Elastomeric isolation pads
Factory installed water strainer
Factory dipped and baked condenser coil corrosion protection coating
5 year compressor parts warranty
1st year parts and labor warranty – whole unit
1st year factory service maintenance incl. quarterly inspections w/ coil cleaning and year-end annual inspection

Performance Data - Air-Cooled Scroll

Tags	CGAM-1
Capacity (tons)	37.90
Unit power input (kW)	45.70
Single point power MCA (A)	197.30
Single point power MOP (A)	225.00
Number of compressors ( )	4
Number of circuits ( )	2

Unit Dimensions - Air-Cooled Scroll
Item: A1 Qty: 1 Tag(s): CGAM-1

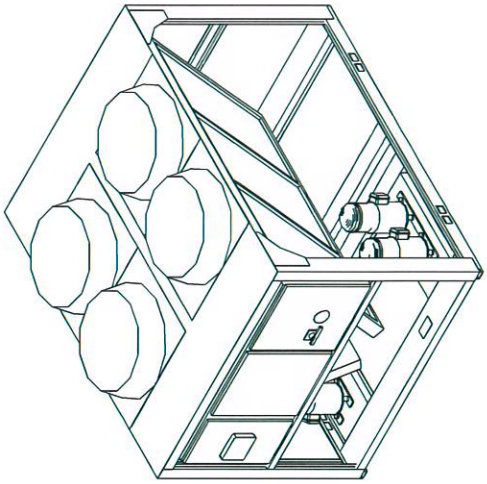

ISOMETRIC VIEW

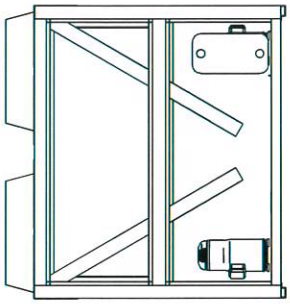

BACK VIEW

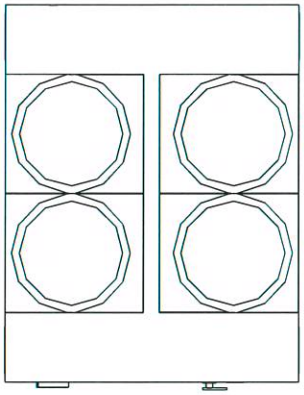

TOP VIEW

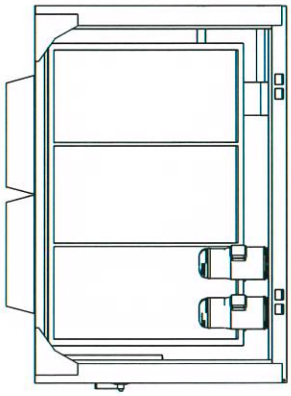

RIGHT SIDE VIEW

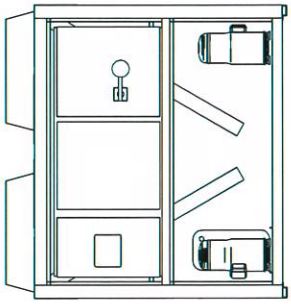

FRONT VIEW

INLET/OUTLET WATER CONNECTION SIZE	3" (80mm)
BRAZE PLATE WATER VOLUME/STORAGE	2.4 GAL (9.1 LITERS)

Unit Dimensions - Air-Cooled Scroll
Item: A1 Qty: 1 Tag(s): CGAM-1

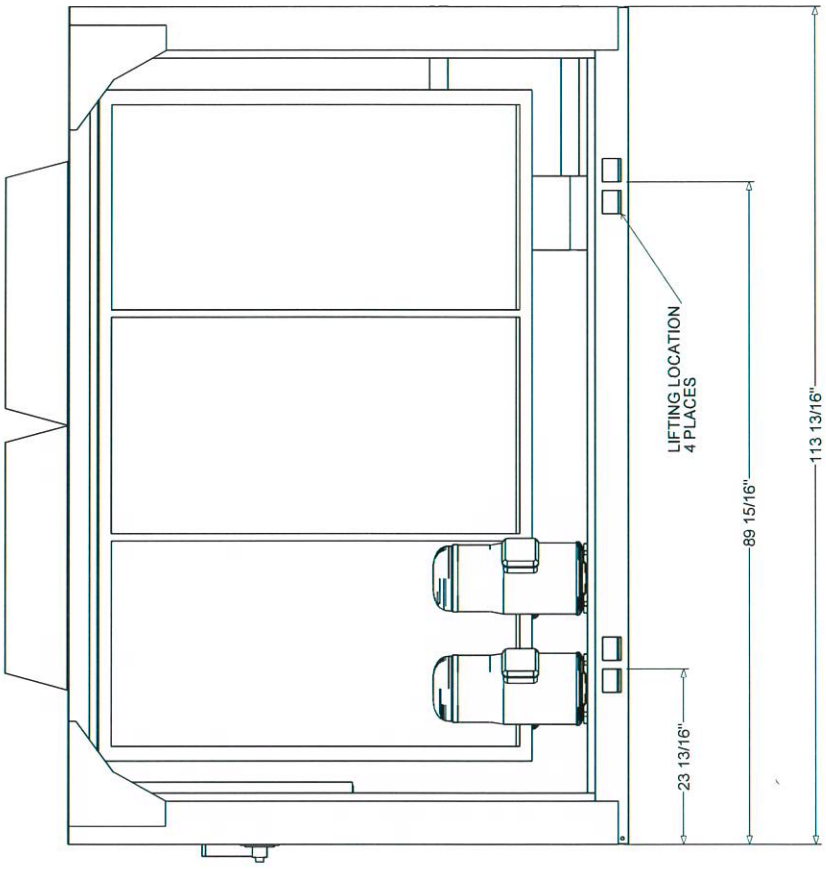

RIGHT SIDE VIEW

Unit Dimensions - Air-Cooled Scroll
Item: A1 Qty: 1 Tag(s): CGAM-1

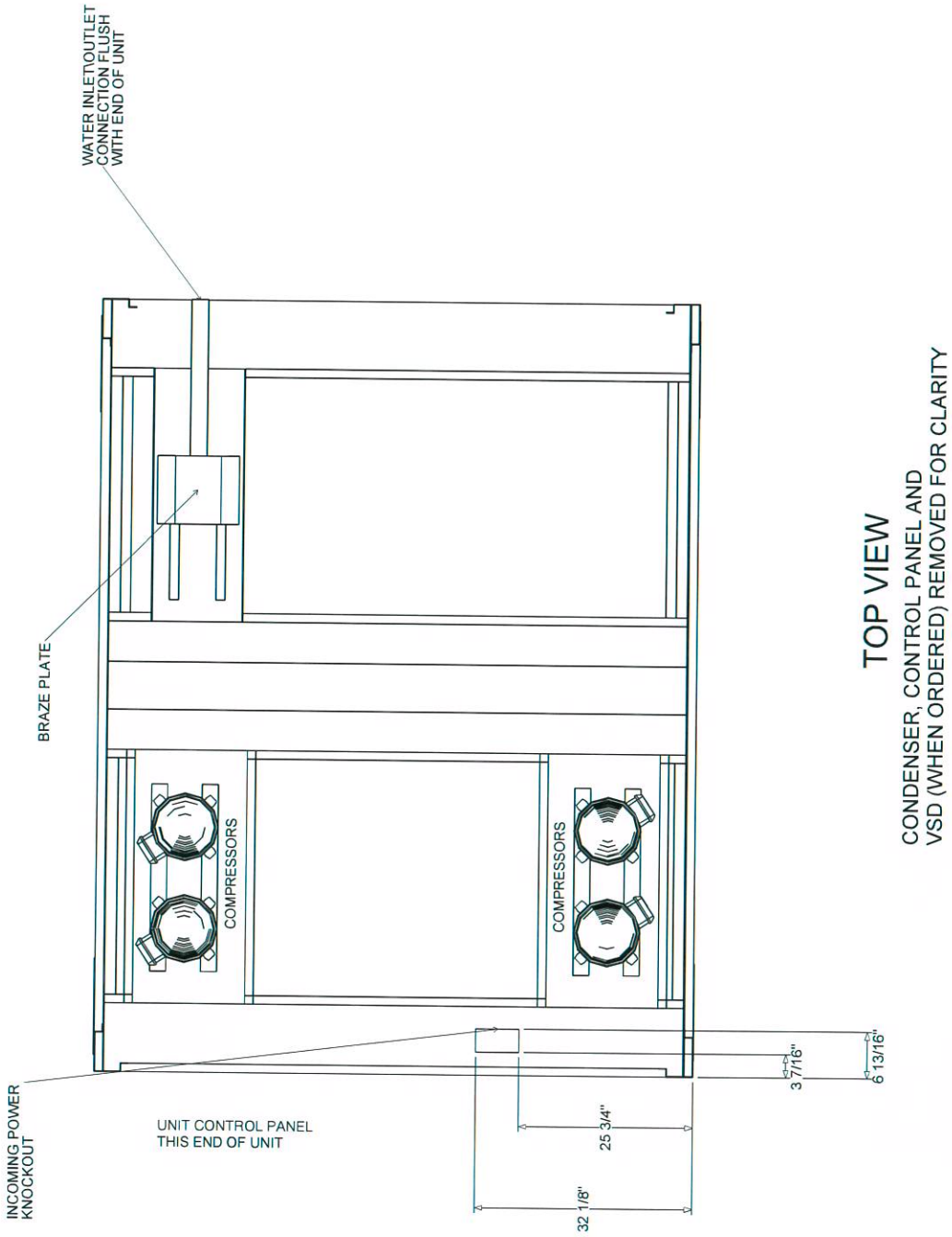

Unit Dimensions - Air-Cooled Scroll
Item: A1 Qty: 1 Tag(s): CGAM-1

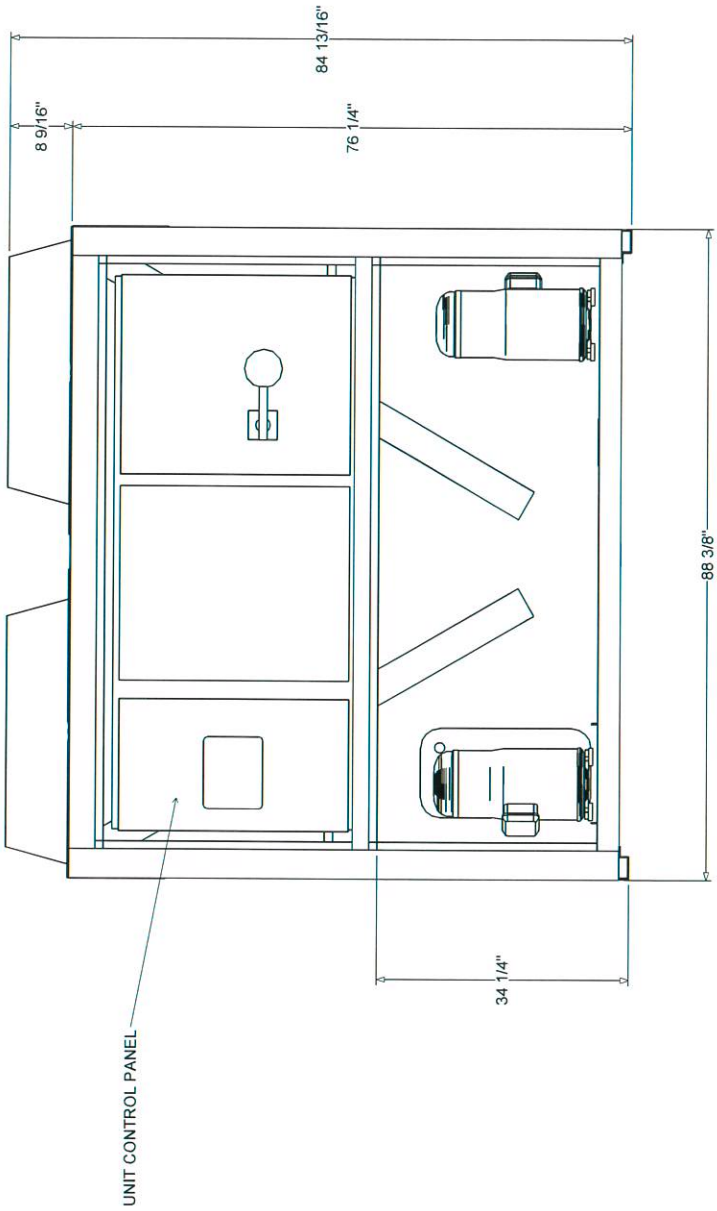

FRONT VIEW

Unit Dimensions - Air-Cooled Scroll
Item: A1 Qty: 1 Tag(s): CGAM-1

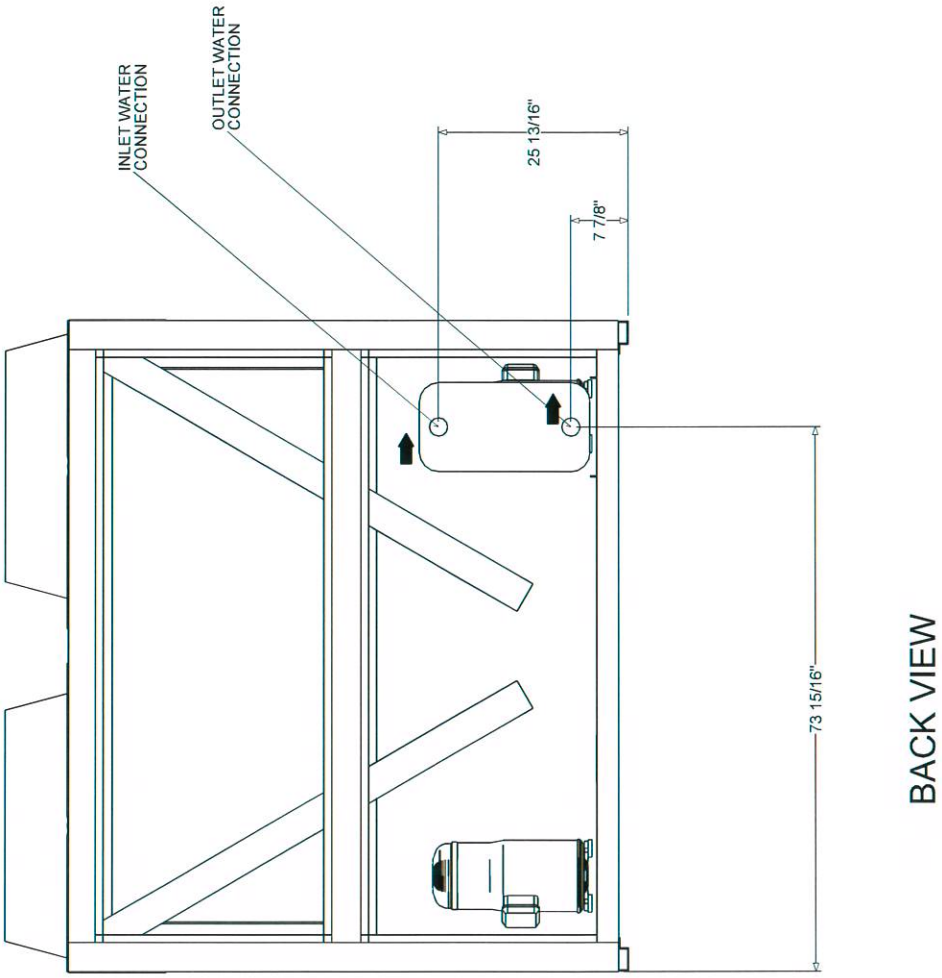

Unit Dimensions - Air-Cooled Scroll
Item: A1 Qty: 1 Tag(s): CGAM-1

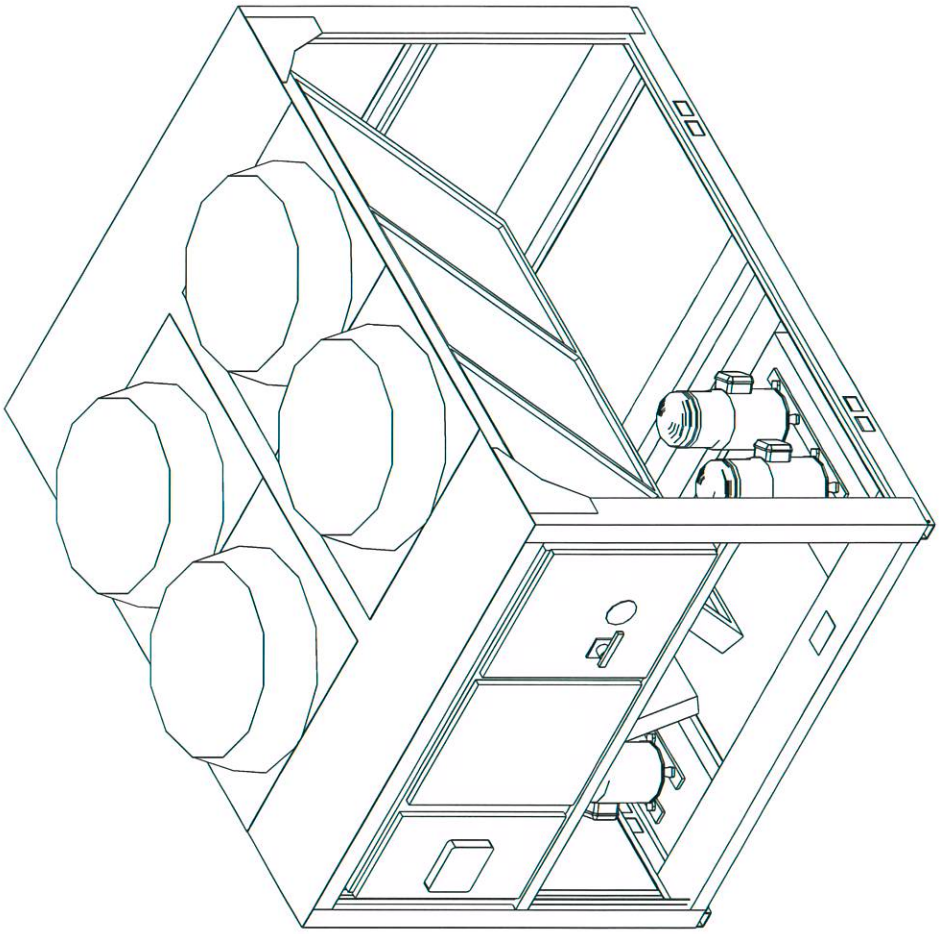

ISOMETRIC VIEW

Weight, Clearance & Rigging Diagram - Air-Cooled Scroll
Item: A1 Qty: 1 Tag(s): CGAM-1

UNIT CENTER OF GRAVITY

LIFTING WEIGHTS				
W1	W2	W3	W4	SHIPPING WEIGHT
1113.7 lb	1133.1 lb	660.0 lb	671.4 lb	3666.3 lb

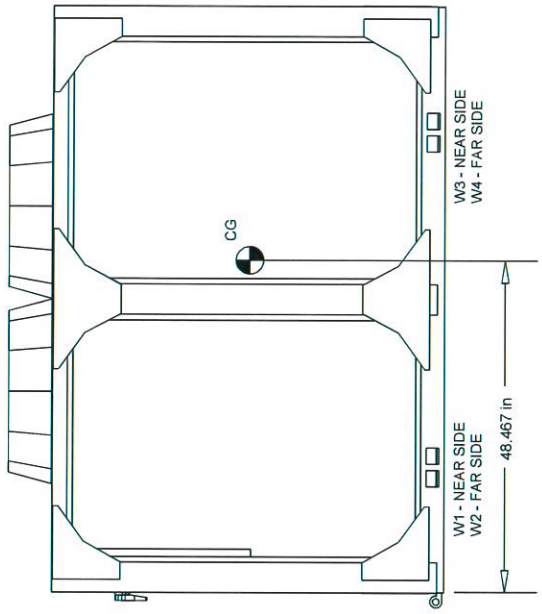

SIDE VIEW

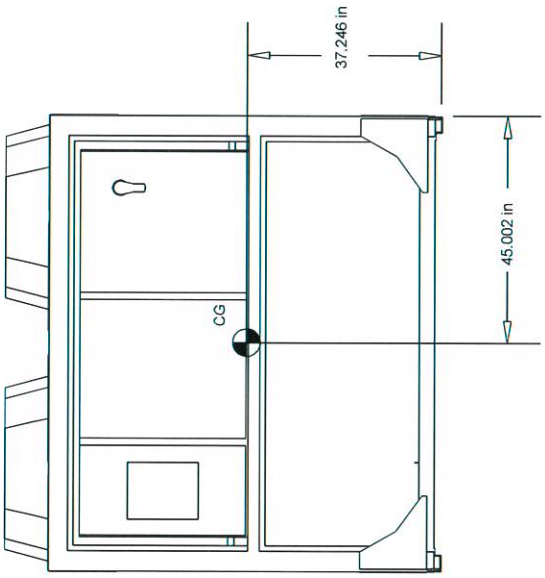

FRONT VIEW
CONTROL PANEL END

Weight, Clearance & Rigging Diagram - Air-Cooled Scroll
Item: A1 Qty: 1 Tag(s): CGAM-1

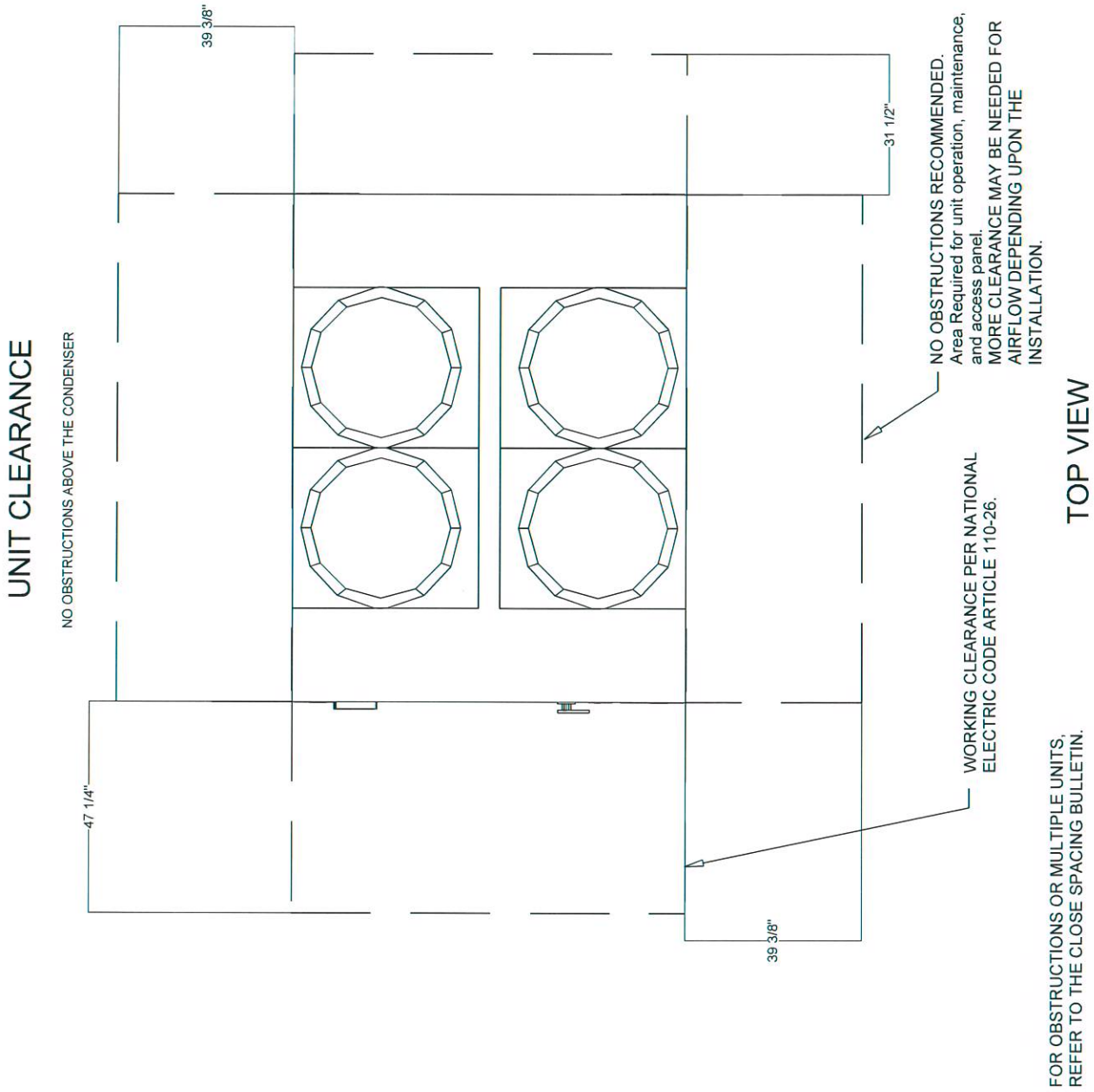

Weight, Clearance & Rigging Diagram - Air-Cooled Scroll
Item: A1 Qty: 1 Tag(s): CGAM-1

UNIT RIGGING

LIFTING A UNIT WITH EQUAL LENGTH STRAPS WILL NOT PRODUCE A LEVEL UNIT DURING THE LIFT BECAUSE THE CG WILL NOT BE AT THE MIDPOINT BETWEEN THE BASE LIFTING HOLES. THE FOLLOWING ADJUSTMENTS MUST BE MADE TO PRODUCE A LEVEL LIFT:

- SINGLE SPREADER BAR LIFTING METHOD
IF THE UNIT CG IS CLOSER TO THE CONTROL PANEL, THE STRAPS ON THE CONTROL PANEL SIDE OF THE SPREADER BAR MUST BE ADJUSTED TO BE SHORTER THAN THOSE ON THE OPPOSITE SIDE OF THE SPREADER BAR, ALLOWING THE SPREADER BAR TO MOVE TOWARD THE CONTROL PANEL AND OVER THE UNIT CG. SEVERAL ADJUSTMENTS OF THE STRAP LENGTH MAY BE REQUIRED TO PRODUCE A LEVEL UNIT DURING LIFT.

- H-TYPE SPREADER BAR LIFTING METHOD
IF THE STRAPS FROM THE H BAR TO THE UNIT BASE ARE THE SAME LENGTH, THE CRANE LIFTING POINT ON THE CENTER WEB OF THE H BAR MUST BE ADJUSTED TO PRODUCE A LEVEL UNIT LIFT.

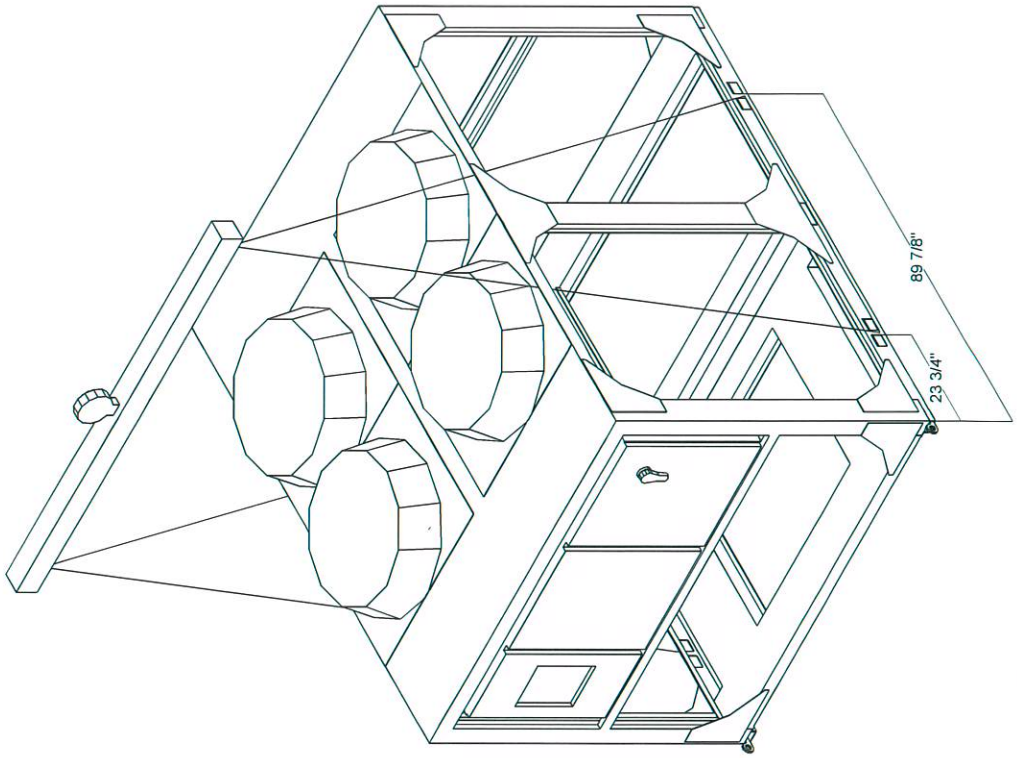

ISOMETRIC VIEW

⚠ WARNING

IMPROPER LIFTING AND MOVING!

USE SPREADER BAR AS SHOWN IN DIAGRAM. REFER TO INSTALLATION MANUAL OR NAMEPLATE FOR UNIT WEIGHT. REFER TO INSTALLATION INSTRUCTIONS LOCATED INSIDE CONTROL PANEL FOR FURTHER RIGGING INFORMATION.

OTHER LIFTING ARRANGEMENTS COULD RESULT IN DEATH, SERIOUS INJURY OR EQUIPMENT DAMAGE.

Proposers must acknowledge receipt of this Addendum No. 1 in the space provided below. This Addendum forms an integral part of the RFP documents and therefore must be executed and submitted with your proposal.

Issued By: City of Lake Worth
Finance Office
December 23, 2014

Signed By: Hirut Darge
Hirut Darge
Purchasing Agent

PROPOSER/Company

Name: Cedars Electro-Mechanical, Inc.

Signed By: Debra L Chalhoub Print Name: Debra L. Chalhoub

Title: president Date: January 7, 2015

EXHIBIT "F"

REFERENCES

List below or on an attached sheet similar references per RFP requirements. Provide the name, addresses and telephone numbers of organizations, governmental or private, for whom you now are, or have **within the past three (3) years** provided services. (THIS FORM MAY BE COPIED).

#1 REFERENCE

Name of Client: Palm Beach County

Address: 2633 Vista Parkway West Palm Beach, FL

Phone No.: (561) 719-8197 Fax: (561) 233-2052

Contact Person Name: Allen Padilla Title: project manager

Description of services: Central Energy Plant Chiller Upgrade- Replaced existing chilled water system with four 650 ton Trane chillers

#2 REFERENCE

Name of Client: Okeechobee County

Address: 1700 N.W. 9th Ave. Okeechobee, FL 34972

Phone No.: (863) 763-0805 Fax: ( ) email doden@co.okeechobee.fl.us

Contact Person Name: Donnie Oden Title: project manager

Description of services: Removed 6 AC Systems + Replaced with split systems.

#3 REFERENCE

Name of Client: Palm Beach County

Address: 2633 Vista Parkway West Palm Beach, FL

Phone No.: (561) 719-8197 Fax: (561) 656-7786

Contact Person Name: Allen Padilla Title: project manager

Description of services: Palm Beach County Convention Center- Replace cooling towers #3 and #4.

RICK SCOTT, GOVERNOR KEN LAWSON, SECRETARY

STATE OF FLORIDA
DEPARTMENT OF BUSINESS AND PROFESSIONAL REGULATION
CONSTRUCTION INDUSTRY LICENSING BOARD

LICENSE NUMBER	
CMC053774	

The MECHANICAL CONTRACTOR
Named below IS CERTIFIED
Under the provisions of Chapter 489 FS.
Expiration date: AUG 31, 2016

CHALHOUB, IBRAHIM H
CEDARS ELECTRO-MECHANICAL INC
1712 S DIXIE HWY
LAKE WORTH FL 33460-5854

ISSUED: 07/02/2014 DISPLAY AS REQUIRED BY LAW SEQ # L1407020001306

RICK SCOTT, GOVERNOR KEN LAWSON, SECRETARY

STATE OF FLORIDA
DEPARTMENT OF BUSINESS AND PROFESSIONAL REGULATION
CONSTRUCTION INDUSTRY LICENSING BOARD

LICENSE NUMBER	
CVC56755	

The SOLAR CONTRACTOR
Named below IS CERTIFIED
Under the provisions of Chapter 489 FS.
Expiration date: AUG 31, 2016

CHALHOUB, IBRAHIM H
CEDARS ELECTRO-MECHANICAL INC
1712 S DIXIE HWY
LAKE WORTH FL 33460

ISSUED: 07/02/2014 DISPLAY AS REQUIRED BY LAW SEQ # L1407020001369

RICK SCOTT, GOVERNOR KEN LAWSON, SECRETARY

STATE OF FLORIDA
DEPARTMENT OF BUSINESS AND PROFESSIONAL REGULATION
CONSTRUCTION INDUSTRY LICENSING BOARD

LICENSE NUMBER	
CGC058543	

The GENERAL CONTRACTOR
Named below IS CERTIFIED
Under the provisions of Chapter 489 FS.
Expiration date: AUG 31, 2016

CHALHOUB, IBRAHIM H
CEDARS ELECTRO MECHANICAL INC
1712 S DIXIE HWY
LAKE WORTH FL 33460-5854

ANNE M. GANNON
CONSTITUTIONAL TAX COLLECTOR
Serving Palm Beach County
Serving *you.*

P.O. Box 3353, West Palm Beach, FL 33402-3353
www.pbctax.com Tel: (561) 355-2264

LOCATED AT
1712 SOUTH DIXIE HWY
LAKE WORTH, FL 33460-0000

TYPE OF BUSINESS	OWNER	CERTIFICATION #	RECEIPT #/DATE PAID	AMT PAID	BILL #
23-0065 MECHANICAL CONTRACTOR	CHALHOUB IBRAHIM HANNA	CMC053774	B14.1392325 - 08/05/14	$27.50	B40106459

This document is valid only when receipted by the Tax Collector's Office.

STATE OF FLORIDA
PALM BEACH COUNTY
2014/2015 LOCAL BUSINESS TAX RECEIPT

CEDARS ELECTRO MECHANICAL INC
CEDARS ELECTRO MECHANICAL INC
1712 SOUTH DIXIE HWY
LAKE WORTH, FL 33460-5887

LBTR Number: 200101955
EXPIRES: SEPTEMBER 30, 2015

This receipt grants the privilege of engaging in or managing any business profession or occupation within its jurisdiction and MUST be conspicuously displayed at the place of business and in such a manner as to be open to the view of the public.

ANNE M. GANNON
CONSTITUTIONAL TAX COLLECTOR
Serving Palm Beach County
Serving *you.*

P.O. Box 3353, West Palm Beach, FL 33402-3353
www.pbctax.com Tel: (561) 355-2264

LOCATED AT
1712 SOUTH DIXIE HWY
LAKE WORTH, FL 33460-0000

TYPE OF BUSINESS	OWNER	CERTIFICATION #	RECEIPT #/DATE PAID	AMT PAID	BILL #
23-0051 GENERAL CONTRACTOR	CHALHOUB IBRAHIM HANNA	CGC058543	B14.1392317 - 08/05/14	$27.50	B40106458

This document is valid only when receipted by the Tax Collector's Office.

STATE OF FLORIDA
PALM BEACH COUNTY
2014/2015 LOCAL BUSINESS TAX RECEIPT

CEDARS ELECTRO MECHANICAL INC
CEDARS ELECTRO MECHANICAL INC
1712 SOUTH DIXIE HWY
LAKE WORTH, FL 33460-5887

LBTR Number: 200101956
EXPIRES: SEPTEMBER 30, 2015

This receipt grants the privilege of engaging in or managing any business profession or occupation within its jurisdiction and MUST be conspicuously displayed at the place of business and in such a manner as to be open to the view of the public.

ANNE M. GANNON
CONSTITUTIONAL TAX COLLECTOR
Serving Palm Beach County
Serving *you.*

P.O. Box 3353, West Palm Beach, FL 33402-3353
www.pbctax.com Tel: (561) 355-2264

LOCATED AT
1712 S DIXIE HWY
LAKE WORTH, FL 33460

TYPE OF BUSINESS	OWNER	CERTIFICATION #	RECEIPT #/DATE PAID	AMT PAID	BILL #
23-0087 SOLAR CONTRACTOR	CHALHOUB IBRAHIM	CVC56755	B14.1392326 - 08/05/14	$27.50	B40150327

This document is valid only when receipted by the Tax Collector's Office.

STATE OF FLORIDA
PALM BEACH COUNTY
2014/2015 LOCAL BUSINESS TAX RECEIPT

CEDARS ELECTRO MECHANICAL INC
CEDARS ELECTRO MECHANICAL INC
1712 S DIXIE HWY
LAKE WORTH, FL 33460-5887

LBTR Number: 200914664
EXPIRES: SEPTEMBER 30, 2015

This receipt grants the privilege of engaging in or managing any business profession or occupation within its jurisdiction and MUST be conspicuously displayed at the place of business and in such a manner as to be open to the view of the public.

City of Lake Worth
Business License Division
1900 2nd Avenue North
Lake Worth, Florida 33461

City of Lake Worth Business License 2014 - 2015

CEDARS ELECTRO-MECHANICAL, INC
1712 S DIXIE HWY
LAKE WORTH FL 33460

Dear Business Owner,

Your participation in the continued growth & vitality of the City of Lake Worth is appreciated. In accordance with Section 14-12, the document below must be posted in a conspicuous place on the premises of your business. If assistance is required, please contact the Department for Community Sustainability/Business License Division by telephone at (561) 586-1647 or visit the City of Lake Worth's website at www.lakeworth.org.

Thank you.

↓ DETACH THE DOCUMENT BELOW AND POST CONSPICUOUSLY AT YOUR PLACE OF BUSINESS ↓

City of Lake Worth Business License 2014 - 2015

NON TRANSFERABLE

BUSINESS NUMBER: 0005923
BUSINESS NAME: CEDARS ELECTRO-MECHANICAL, INC
BUSINESS ADDRESS: 1712 S DIXIE HWY, LAKE WORTH FL 33460-5854

LICENSE NUMBER	CLASSIFICATION	DESCRIPTION
15-00005866	30.01H	HARV CONTRACTOR 1-6 EMP (BTR) SF
15-00005867	30.03I	SPECIALTY CONTRACTOR 11-20 EMP (BTR) OFFICE ONLY
15-00016083	30.01A	GENERAL CONTRACTOR (BTR) MECHANICAL CONTRACTOR
15-00035202	UC	USE & OCCUPANCY COMMERCIAL/INDUSTRIAL MECHANICAL CONTRACTOR

EXPIRES
SEPTEMBER 30th
2015

JOHN CHALHOUB

2 Lakeside Palms Court
Lake Worth, FL 33460
561-818-4624-cellular
Email: johnc@cedarsinc.com

EXPERIENCE:

Cedars Electro-Mechanical, Inc.
1712 S. Dixie Hwy.
Lake Worth, FL 33460
561-588-4088

1/13-present—Superintendent for various governmental and school projects that include Big Cypress National Preserve, Western High School, Crystal Lakes Middle School, Oxbridge Academy, Solid Waste Authority and Jupiter Farms Radio Tower Equipment Shelter

Supervised field work, coordinated subcontractors, coordinated materials for delivery to each job, coordinated with owner and architect, prepared proposals, and ensured the work is completed by the plans and specifications. Responsible for bidding the mechanical division and assisting in the civil engineering division.

1/11-12/12 Part- time field work on construction projects assisting the project manager and superintendent.

EDUCATION:

Florida Atlantic University — Bachelor of Science in Mechanical Engineering
Boca Raton, FL — Dec 2012

ACTIVITIES:

2008 - Supervised construction (organizing materials, preparing stucco, applying and finishing of stucco) of houses for an indigent family for an organization called Project Mexico in Rosarita, Mexico.

2006- Assisted in the construction (organizing materials, preparing, applying and finishing of stucco) of houses for indigent families, and digging trenches and laying pipes for irrigation at the orphanage at Project Mexico.

COMPUTER PROGRAMS:

Solid works, Ansys, HVAC Solution, EES Eco audit, Lab View, Matlab
Word, Excel, PowerPoint

Resume of John J. Giacobba

5537 Croydon Ct.
Boca Raton, FL 33486
561-789-2984
johng@cedarsinc.com

Education: B.S.C.E. University of Wyoming-1964- Laramie, WY
Assoc. C.E. Worcester Junior College-1961- Worcester, WA

Experience:

1998-present: Cedars Electro-Mechanical, Inc. Estimator & project manager for federal, state, county, & various private jobs. Estimating, bidding, subcontract negotiation, change order processing and client interaction

1980-1977: JJC Contractors Inc. Owner, estimator and project manager. Specialized in public work for the federal government. Annual volume averaged $2,000,000. Similar duties with K&G Construction in Maryland from 1980-1987. Projects varied in size from $200,000 to $2,500,000. The scope of work ranged from building projects to the construction of a Jet Fuel Facility. Clients include US Army Corp of Engineers, Veterans Administration and Naval Facilities Engineering Command.

1978-1980: D.A.& L.Caruso Inc./District Associates Inc. (South Plainfield NJ) Project manager and engineer for utility contractor in the Washington DC, Virginia and Baltimore area. Bid preparation, subcontract management, construction engineering and project management. Total construction volume exceeded $18,000,000.

1970-1975: Employed by various building contractors in the NJ/ PA area. Estimating and subcontract management. Employed by Frank Briscoe Co. of Newark, NJ as a contract administrator preparing and submitting change order proposals on various projects throughout the New Jersey area.

1965-1969: USAF Civil Engineering Officer- Served as design, construction, and maintenance engineer in the civil engineering branch stateside and in Vietnam. Discharged in 1969 with the rank of captain.

DEBRA L. CHALHOUB
2 Lakeside Palms Ct.
Lake Worth, FL 33460
561-588-4088 Office
561-346-5321 Celluar
Email: debrac@cedarsinc.com

SUMMARY

President of Cedars Electro-Mechanical, Inc., a Florida State Registered Mechanical, General and Solar Contractor

EXPERIENCE

* Responsible for all financial and governmental reportings, contracts and change orders, qualifications, bids and job costing, vendor and customer interactions, taxes, workmen compensation, and necessary insurances, licenses and loans.

* Project Manager for 129 NW 10th Ave-Delray Beach, Florida and responsible for acquiring and supervising subcontractors for a complete restoration of a historic home down to new flooring, closets, cabinets, HVAC, plumbing and new patio and landscaping.

* Project Manager for 211 N. Federal Hwy-Lake Worth, Florida and responsible for gutting the top floor, designing three apartments, hiring and supervising subcontractors and employees of Cedars Electro-Mechanical, Inc. and remodeling the space including all finishes.

EMPLOYMENT:

4/93- present	Cedars Electro-Mechanical Inc. 1712 S. Dixie Hwy. Lake Worth, FL 33460
2/91 to 4/93	Diana Designs 25 S. "H" Street Lake Worth, Fl. 33460 407-582-3221

EDUCATION

Shippensburg University- Shippensburg, Pa. - B.A. in Social Welfare
Florida Atlantic University-Boca Raton, FL- B.S. in Accounting
State General Contractors Test- Passed and awaiting license

IBRAHIM CHALHOUB
1712 S. Dixie Highway
Lake Worth, FL 33460
561-588-4088-office
561-762-9178-cellular
Email: Ibrahim@cedarsinc.com

EXPERIENCE:

1990- 2014- Corporate Secretary and operations manager of Cedars Electro-Mechanical, Inc., a mechanical, general and solar contracting firm performing governmental, commercial, and industrial projects in Florida, Louisiana, Georgia, and Alabama since 1990. Clients include US Coast Guard, US Army, US Corp of Engineers, US Air Force, US Navy, Palm Beach County, Solid Waste Authority, City of West Palm Beach, and the Broward County School Board as well as various commercial vendors. Duties include overseeing design, construction, negotiations, execution, and bidding.

1987-1990- Customer Service and Project Manager for EMCO Engineering-Water and Waste Water Treatment Company-Offices in Massachusetts and the Middle East

1982-1987-Management and key supervisory experience of various projects that included a complete hospital/housing project, water & waste water treatment plants, and major governmental facilities in Saudi Arabia. Advanced HVAC and plumbing systems, steam generation, fire protection, water distribution networks, irrigation systems, swimming pools, power plant, incinerators, decorative fountains, medical gas collection systems, and underground fuel tanks were some of the areas of expertise.

EDUCATION:

FLORIDA ATLANTIC UNIVERSITY BOCA RATON, FL	Bachelor of Science in Mechanical Engineering 81
PALM BEACH JUNIOR COLLEGE LAKE WORTH, FL	AA in Engineering 79
LEBANESE UNIVERSITY BEIRUT, LEBANON	Mathematics Major

LICENSES:

Florida General Contractor	CGC058543
Florida Mechanical Contractor	CMC053774
Florida Solar Contractor	CVC56755

INTERESTS:

Design and construction of green buildings
Alternative Energy: Solar & Wind

Lake Worth
Chiller Replacement

ID		Task Mode	Task Name	Duration	Start	Finish
1						
2						
3			Mobilization	1 day	Wed 3/25/15	Wed 3/25/15
4			Secure Work Area	1 day	Wed 3/25/15	Wed 3/25/15
5			Remove, Replace Chiller	1 day	Fri 3/27/15	Fri 3/27/15
6			Reconnect Chiller Piping	2 days	Fri 3/27/15	Sat 3/28/15
7			Reconnect Chiller Electrical	2 days	Fri 3/27/15	Sat 3/28/15
8			Start up chiller	1 day	Sun 3/29/15	Mon 3/30/15
9			Piping Insulation	2 days	Sun 3/29/15	Tue 3/31/15
10			Final Clean-up	1 day	Tue 3/31/15	Tue 3/31/15

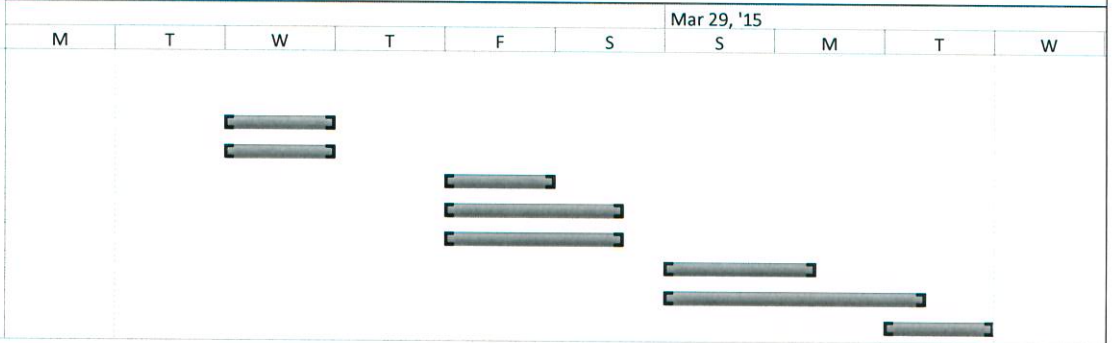

Project: Prel Proj Sched 07jan15
Date: Wed 1/7/15

Task		External Tasks		Manual Task		Finish-only	
Split		External Milestone		Duration-only		Deadline	
Milestone		Inactive Task		Manual Summary Rollup		Progress	
Summary		Inactive Milestone		Manual Summary			
Project Summary		Inactive Summary		Start-only			

EXHIBIT "B"

RFP 15-102

COST PROPOSAL

In accordance with the specifications and Scope of Work included with this bid, the following is the recommended lump sum bid pricing in order to evaluate the total bid as submitted with your proposal. These prices are used as a tool for the evaluation of the proposal(s).

ITEM #	DESCRIPTION	QTY	UNIT	UNIT PRICE	TOTAL
1	FULL REMOVAL & REPLACEMENT OF THE EXISTING CHILLER UNIT WITH ALL ASSOCIATED WORK AS DESCRIBED IN THIS PROPOSAL & ANY ADDENUM(S)	1	LS		59,850
				BASE PROPOSAL TOTAL	59,850

Name of Firm: Cedars Electro-Mechanical, Inc

Print Name: Debra Chalh. Title: president

Cedars
Electro-Mechanical, Inc.

To City of Lake Worth

Re: City Hall Chiller Replacement
RFP #15-102

Cedars Electro-Mechanical, Inc. has not been involved in any litigation or termination within the last five years.

Debra Chalhoub

Debra Chalhoub
President

1712 S. Dixie Highway • Lake Worth, FL 33460-5854 • 561-588-4088 • Fax 588-4087

CGC 058543 • CMC 053774

EXHIBIT "C"

PUBLIC SAFETY COMPLEX CHILLER REPLACEMENT

RFP # 15-102

REGISTRATION FORM

Proposers should complete and return this form to the Procurement Office prior **3:00 P.M. EST, Wednesday, December 10, 2014 in order to receive any addenda(s) issued for this RFP.**

It is the responsibility of the Proposer to ensure its receipt of all addenda.

Name of Company: Cedars Electro-Mechanical, Inc.

Contact Person: Debra Chalhoub Title: President

Street: 1712 S. Dixie Highway

City: Lake Worth State: FL Zip: 33460

Telephone (561) 588-4088 Fax(561) 588-4087

E-Mail Address: debrac@cedarsinc.com

Preferred Method of Receipt: ☐ Fax ☒ E-Mail

EXHIBIT "D"

PROPOSER INFORMATION PAGE

RFP # 15-102

Company Name: Cedars Electro-Mechanical, Inc

Authorized Signature: Debra Chalhoub (Signature) Debra Chalhoub (Print Name)

Title: president

Physical Address: 1712 S. Dixie Hwy. (Street)

Lake Worth (City) FL (State) 33460 (Zip Code)

Telephone: 561-588-4088 Fax: 561-588-4087

Email Address: debrac@cedarsinc.com

Web Site (if applicable):

Federal Identification Number: 65-0213904
This is a requirement of every Proposer.

EXHIBIT "E"

CONFIRMATION OF DRUG-FREE WORKPLACE

In accordance with Section 287.087, Florida Statutes, whenever two or more proposals are equal with respect to price, quality, and service which are received by any political subdivision for the procurement of commodities or contractual services, a proposal received from a business that certifies that it has implemented a drug-free workplace program shall be given preference in the award process. In order to have a drug-free workplace program, a business shall:

(1) Publish a statement notifying employees that the unlawful manufacture, distribution, dispensing, possession, or use of a controlled substance is prohibited in the workplace and specifying the actions that will be taken against employees for violations of such prohibition.

(2) Inform employees about the dangers of drug abuse in the workplace, the business's policy of maintaining a drug-free workplace, any available drug counseling, rehabilitation, and employee assistance programs, and the penalties that may be imposed upon employees for drug abuse violations.

(3) Give each employee engaged in providing the commodities or contractual services that are under proposal a copy of the statement specified in subsection (1).

(4) In the statement specified in subsection (1), notify the employees that, as a condition of working on the commodities or contractual services that are under proposal, the employee will abide by the terms of the statement and will notify the employer of any conviction of, or plea of guilty or nolo contendere to, any violation of chapter 893 or of any controlled substance law of the United States or any state, for a violation occurring in the workplace no later than 5 days after such conviction.

(5) Impose a sanction on, or require the satisfactory participation in a drug abuse assistance or rehabilitation program if such is available in the employee's community by, any employee who is so convicted.

(6) Make a good faith effort to continue to maintain a drug-free workplace through implementation of this section.

As the person authorized to sign this statement on behalf of Cedars Electro-Mech I certify that Cedars Electro- Mechanical complies fully with the above requirements.

Debra L Chalhoub — 1-7-2015

Authorized Representative's Signature — Date

Debra Chalhoub — president

Name: — Position:

AGREEMENT
(Public Safety Complex Chiller Replacement)

THIS AGREEMENT is made this _____day of _____, 2015 between the **City of Lake Worth**, Florida, a municipal corporation, hereinafter the "CITY", with its office located at 7 North Dixie Highway, Lake Worth, Florida 33460, and, **Cedars Electro-Mechanical, Inc.,** a corporation authorized to do business in the State of Florida, hereinafter the "CONTRACTOR", with its office located at 1712 S. Dixie Highway, Lake Worth, FL 33460.

RECITALS

WHEREAS, the CITY is a municipal corporation organized and existing pursuant to the Charter and the Constitution of the State of Florida;

WHEREAS, the CITY issued Request for Proposals #15-102 (hereinafter "RFP") for the replacement of the public safety complex chiller;

WHEREAS, CONTRACTOR submitted a response to replace the public safety complex chiller as described and set out in the RFP;

WHEREAS, the CITY desires to accept the CONTRACTOR's response in order for CONTRACTOR to render the goods and services to the CITY as provided herein;

WHEREAS, the CONTRACTOR further warrants that it is experienced and capable of performing the tasks hereunder in a professional and competent manner;

WHEREAS, the CITY finds awarding the RFP to the CONTRACTOR as described herein serves a valid public purpose.

NOW THEREFORE, the CITY hereby engages the services of the CONTRACTOR, and in consideration of the mutual promises herein contained, the sufficiency of which is hereby acknowledged by both parties, the parties agree as follows:

1. SCOPE OF WORK

1.1 The scope of work is the providing of all parts and labor for the replacement of the chiller unit for the public safety complex, as more specifically set forth in the RFP (the "Scope of Work"). CONTRACTOR shall provide all labor and materials to complete the scope of work as set forth by the CITY in the RFP, which shall also include the removal and disposal of the current chiller unit, at its own cost and expense. CONTRACTOR, upon the issuance of a notice to proceed, shall commence the work and shall, to the satisfaction of the CITY and in accordance with the RFP, complete all work within 120 calendar days of the issuance of the notice to proceed.

1.2 The CONTRACTOR represents to the CITY that the services and materials provided under this Agreement shall be in accordance with accepted and established trade practices and procedures recognized in the CONTRACTOR's trade in general and that the materials shall conform to the highest standards and in accordance with this Agreement.

1.3 The CONTRACTOR represents that it is licensed to do business in the State of Florida and holds and will maintain all applicable licenses required for the work to be completed under this Agreement. The CONTRACTOR further warrants its capability and experience to perform the work provided for herein in a professional and competent manner.

2. USE OF AGENTS OR ASSISTANTS

2.1 To the extent reasonably necessary to enable the CONTRACTOR to perform its work hereunder, the CONTRACTOR shall be authorized to engage the services of any agents or assistants which it may deem proper, and may further employ, engage, or retain the services of such other persons or corporations to aid or assist in the proper performance of its duties. All costs of the services of, or expenses incurred by, such agents or assistants shall be paid by the CONTRACTOR.

3. FEE AND NOTICE TO PROCEED

3.1 For services to be rendered under this Agreement, the CONTRACTOR shall be entitled to a fee as set forth in the RFP, which is $59,850.00.

3.2 Should the CITY require additional services or materials, not included in this Agreement, fees and payment for such work will be set forth in a separate Addendum, as authorized in accordance with the CITY's procurement code prior to any such additional goods being provided by the CONTRACTOR.

3.3 CONTRACTOR shall not commence work until a notice to proceed has been issued by the CITY. CONTRACTOR shall not exceed amounts expressed on the RFP response. Note that the City's Fiscal Year ends on September 30th of each calendar year. The City cannot authorize the purchase of goods or services beyond September 30th of each calendar year, prior to the annual budget being approved by the City Commission. Additionally, the City must have budgeted appropriate funds for the goods in any subsequent Fiscal Year.

4. MAXIMUM COSTS

4.1 The CONTRACTOR expressly acknowledges and agrees that the total cost to provide all goods and services is specified in the response to the RFP, in the amount of

$59,850.00, and no additional costs shall be authorized without prior written approval from CITY's governing body.

5. INVOICE

5.1 The CONTRACTOR shall submit an itemized invoice to the CITY for approval prior to receiving compensation. The CONTRACTOR shall be paid within thirty (30) days of receipt of an approved invoice for work. **The CITY shall withhold retainage in the percentage amounts as set forth in Florida Statute 218.735(8)(a-g).**

6. AUDIT BY CITY

6.1 The CONTRACTOR shall permit the CITY, or any authorized representatives of the CITY, at all reasonable times, access to and the right to examine all records, books, papers or documents related to the CONTRACTOR's performance under this Agreement including, but not limited to, expenses for sub-contractors, agents or assistants, direct and indirect charges for work performed and detailed documentation for all such work performed or to be performed under this Agreement.

7. COPIES OF DATA/DOCUMENTS

7.1 Copies or original documents prepared by the CONTRACTOR in relation to work associated with this Agreement shall be provided to the CITY. Data collected, stored, and/or provided shall be in a form acceptable to the CITY and agreed upon by the CITY.

8. OWNERSHIP

8.1 Each and every report, draft, work product, map, record, and other document reproduced, prepared, or caused to be prepared by the CONTRACTOR pursuant to or in connection with this Agreement shall be the exclusive property of the CITY.

9. WRITTEN AUTHORIZATION REQUIRED

9.1 The CONTRACTOR shall not make changes in the Scope of Work or perform any additional work or provide any additional material under this Agreement without first obtaining written authorization from the CITY for such additional work or materials. Additional labor or materials provided without written authorization shall be done at the CONTRACTOR's sole risk and without payment from the CITY.

10. DEFAULTS, TERMINATION OF AGREEMENT

10.1 If the CONTRACTOR fails to satisfactorily perform the work specified in this Agreement; or, is in material breach of a term or condition of this Agreement, the Public Services Director may give written notice to the CONTRACTOR specifying defaults to be remedied. Such notice shall set forth the basis for any dissatisfaction and suggest

corrective measures. If the CONTRACTOR does not remedy defaults within the allotted time or commence good faith steps to remedy the default to the reasonable satisfaction of the Public Services Director, the CITY may take such action to remedy the default and all expenses related thereto shall be borne by the CONTRACTOR including, without limitation, utilization of another contractor to provide for such work; and/or, the CITY may withhold any money due or which may become due to the CONTRACTOR for such expense and/or work related to the claimed default. Alternatively, or in addition to the foregoing, if after three (3) days the CONTRACTOR has not remedied defaults or commenced good faith steps to remedy defaults to the satisfaction of the Public Services Director, the CITY may elect to terminate this Agreement. No compensation shall be paid for de-mobilization, take-down, disengagement wind-down, lost profits or other costs incurred due to termination of this Agreement under this paragraph 10.1.

10.2 Notwithstanding paragraph 10.1, the CITY reserves the right and may elect to terminate this Agreement at any time, with or without cause. At such time, the CONTRACTOR would be compensated only for that work which has been satisfactorily completed to the date of termination. In the event material has been ordered or is in the process of being manufactured, the CITY must pay for all material ordered or manufactured. No compensation shall be paid for de-mobilization, take-down, disengagement wind-down, lost profits or other costs incurred due to termination of this Agreement under this paragraph 10.2.

11. INSURANCE

11.1. Prior to commencing any services the CONTRACTOR shall provide certificates evidencing insurance coverage as required by the RFP.

12. WAIVER OF BREACH

12.1 The waiver by either party of any breach of any provision of this Agreement shall not operate or be construed as a waiver of any subsequent breach of that same or any other provision.

13. INDEMNITY

13.1 The CONTRACTOR shall indemnify, defend and hold harmless, to the maximum extent permitted by law, the CITY and its officers, agents, employees and representatives, from and against any and all liability, suit, actions, proceedings, judgments, claims, losses, liens, damages, injuries (whether in contract or in tort, including personal injury, accidental death, patent infringement or property damage, and regardless, of whether the allegations are false, fraudulent or groundless), costs and expenses (including attorney's fees, litigation, arbitration, mediation, appeal expenses) to the extent arising out of or

alleged to have arisen out of the acts or neglect of its agents, employees, subcontractors or by anyone the CONTRACTOR directly or indirectly employed.

13.2 The CONTRACTOR's obligation to indemnify, defend and hold harmless shall remain in effect and shall be binding upon the CONTRACTOR whether such injury or damage shall accrue, or may be discovered, before or after termination of this Agreement.

13.3 The CONTRACTOR's failure to comply with this section's provisions shall constitute a material breach upon which the CITY may immediately terminate or suspend this Agreement.

14. ENTIRE AGREEMENT AND ORDER OF PRECEDENCE

14.1 This Agreement consists of the terms and conditions provided herein; the RFP (including all specifications, exhibits and addenda attached thereto or referenced therein); and, the CONTRACTOR's responsive bid. To the extent that there exists a conflict between this Agreement and the remaining documents, the terms, conditions, covenants, and/or provisions of this Agreement shall prevail with the RFP (including all specifications, exhibits and addenda attached thereto) next taking precedence. Wherever possible, the provisions of such documents shall be construed in such a manner as to avoid conflicts between provisions of the various documents.

14.2 This Agreement supersedes any and all other Agreements, either oral or in writing, between the parties hereto with respect to the subject matter hereof, and no other Agreement, statement, or promise relating to the subject matter of this Agreement which is not contained herein shall be valid or binding.

15. ASSIGNMENT

15.1 Nothing under this Agreement shall be construed to give any rights or benefits to any party other than the CITY and the CONTRACTOR. All duties and responsibilities under this Agreement shall be for the sole and exclusive benefit of the CITY and the CONTRACTOR and not for the benefit or any other party. The CONTRACTOR shall not assign any right or interest in this Agreement, and shall not delegate any duty owned, without the CITY's prior written consent. Any attempted assignment or delegation shall be void and totally ineffective for all purposes, and shall constitute a material breach upon which the CITY may immediately terminate or suspend this Agreement.

15.2 In the event the CITY consents to an assignment or delegation, the assignee, delegate, or its legal representative shall agree in writing to personally assume, perform, and be bound by this Agreement's covenants, conditions, obligations and provisions.

16. SUCCESSORS AND ASSIGNS

16.1 Subject to the provision regarding assignment, this Agreement shall be binding on the heirs, executors, administrators, successors, and assigns of the respective parties.

17. WAIVER OF TRIAL BY JURY

17.1 TO ENCOURAGE PROMPT AND EQUITABLE RESOLUTION OF ANY LITIGATION, EACH PARTY HEREBY WAIVES ITS RIGHTS TO A TRIAL BY JURY IN ANY LITIGATION RELATED TO THIS AGREEMENT.

18. GOVERNING LAW AND REMEDIES

18.1 The validity of this Agreement and of any of its terms or provisions, as well as the rights and duties of the parties hereunder, shall be governed by the laws of the State of Florida and venue shall be in Palm Beach County, Florida.

18.2 No remedy herein conferred upon any party is intended to be exclusive of any other remedy, and each and every such remedy shall be cumulative and shall be in addition to every other remedy given hereunder or now or hereafter existing at law or in equity or by statute or otherwise. No single or partial exercise by any party of any right, power, or remedy hereunder shall preclude any other or further exercise thereof.

19. TIME IS OF THE ESSENCE

19.1 Time is of the essence in the delivery of the goods as specified herein.

20. NOTICES

20.1 All notices hereunder must be in writing and, unless otherwise provided herein, shall be deemed validly given on the date when personally delivered to the address indicated below; or on the third (3rd) business day following deposit, postage prepaid, using certified mail, return receipt requested, in any U.S. postal mailbox or at any U.S. Post Office; or when sent via nationally recognized overnight courier to the address indicated below. Should the CITY or the CONTRACTOR have a change of address, the other party shall immediately be notified in writing of such change, provided, however, that each address for notice must include a street address and not merely a post office box. All notices, demands or requests from the CONTRACTOR to the CITY shall be given to the CITY address as follows:

Felipe Lofaso, Asst. Director of Public Services
City of Lake Worth
1749 3rd Avenue South
Lake Worth, Florida 33460

All notices, demands or requests from the CITY to the CONTRACTOR shall be given to the CONTRACTOR address as follows:

Cedars Electro-Mechanical, Inc.
1712 S. Dixie Highway
Lake Worth, FL 33460

21. SEVERABILITY

21.1 Should any part, term or provision of this Agreement or any document required herein to be executed be declared invalid, void or unenforceable, all remaining parts, terms and provisions hereof shall remain in full force and effect and shall in no way be invalidated, impaired or affected thereby.

22. DELAYS AND FORCES OF NATURE

22.1 The CONTRACTOR shall not be considered in default by reason of a delay in timely performance if such delay and failure arises out of causes reasonably beyond the control of the CONTRACTOR or its subcontractors and without their fault or negligence. Upon the CONTRACTOR's request, the CITY shall consider the facts and extent of any such delay and failure to timely perform the work for reason beyond the control of the CONTRACTOR and, if the CONTRACTOR'S delay and failure to timely perform was without it or its subcontractors' fault or negligence, as determined by the CITY in its sole discretion, the time of completion shall be extended for any reasonable time that the CITY, in its sole discretion, may decide; subject to the CITY'S rights to change, terminate, or stop any or all of the work at any time. If the CONTRACTOR is delayed at any time in the progress of the work by any act or neglect of the CITY or its employees, or by any other contractor employed by the CITY, or by changes ordered by the CITY, unavoidable casualties, or any causes beyond the CONTRACTOR'S control, or by delay authorized by the CITY pending negotiation or by any cause which the CITY, in its sole discretion, shall decide justifies the delay, then the time of completion shall be extended for any reasonable time the CITY, in its sole discretion, may decide. No extension of time shall be made for any delay occurring more than five (5) days before a claim therefore is made in writing to the CITY. In the case of continuing cause of delay, only one (1) claim is necessary. The CONTRACTOR's sole remedy for a delay in completion of the work for any reason will be an extension of time to complete the work and CONTRACTOR specifically waives any right to seek any monetary damages or losses for a delay in completion of the work, including, but not limited to, waiving any right to seek monetary amounts for lost profits, additional overhead, salaries, lost productivity, efficiency losses, or any other alleged monetary losses which may be allegedly suffered by CONTRACTOR due to a delay in completion of the work.

22.2 Neither party shall be considered in default in the performance of its obligations hereunder or any of them, if such obligations were prevented or delayed by any cause,

existing or future beyond the reasonable control of such party which include but are not limited to acts of God, labor disputes or civil unrest.

23. COUNTERPARTS

23.1 This Agreement may be executed in counterparts, each of which shall be an original, but all of which shall constitute one and the same document. Each of the parties shall sign a sufficient number of counterparts, so that each party will receive a fully executed original of this Agreement.

24. LIMITATIONS OF LIABILITY

24.1 Under no circumstances shall either party be liable to the other for any consequential, incidental, special, punitive, or any other form of indirect or non-compensatory damages.

25. PUBLIC ENTITY CRIMES

25.1 CONTRACTOR acknowledges and agrees that a person or affiliate who has been placed on the convicted vendor list following a conviction for a public entity crime may not submit a bid, proposal, or reply on a contract to provide any goods or services to a public entity; may not submit a bid, proposal, or reply on a contract with a public entity for the construction or repair of a public building or public work; may not submit bids, proposals, or replies on leases of real property to a public entity; may not be awarded or perform work as a contractor, supplier or sub-contractor under a contract with any public entity; and may not transact business with any public entity in excess of the threshold amount provided in Section 287.017, Florida Statues, for CATEGORY TWO for a period of 36 months following the date of being placed on the convicted vendor list. CONTRACTOR will advise the CITY immediately if it becomes aware of any violation of this statute.

26. PREPARATION

26.1 This Agreement shall not be construed more strongly against either party regardless of who was more responsible for its preparation.

27. PALM BEACH COUNTY INSPECTOR GENERAL

27.1 In accordance with Palm Beach County ordinance number 2011-009, the CONTRACTOR acknowledges that this Agreement may be subject to investigation and/or audit by the Palm Beach County Inspector General. The CONTRACTOR has reviewed Palm Beach County ordinance number 2011-009 and is aware of its rights and/or obligations under such ordinance.

28. ENFORCEMENT COSTS

28.1 All parties shall be responsible for their own attorneys' fees, court costs and expenses if any legal action or other proceeding is brought for any dispute, disagreement, or issue of construction or interpretation arising hereunder whether relating to the Contract's execution, validity, the obligations provided therein, or performance of this Contract, or because of an alleged breach, default or misrepresentation in connection with any provisions of this Contract.

29. PUBLIC RECORDS

CONTRACTOR shall comply with Florida's Public Records Laws, and specifically agrees to:

(a) Keep and maintain public records that ordinarily and necessarily would be required by the CITY in order to perform the service.

(b) Provide the public with access to public records on the same terms and conditions that the CITY would provide the records and at a cost that does not exceed the cost provided in this Chapter 119, Florida Statutes, or as otherwise provided by law.

(c) Ensure that public records that are exempt or confidential and exempt from public records disclosure requirements are not disclosed except as authorized by law.

(d) Meet all requirements for retaining public records and transfer, at no cost, to the CITY all public records in possession of the CONTRACTOR upon termination of the Agreement and destroy any duplicate public records that are exempt or confidential and exempt from public records disclosure requirements. All records stored electronically must be provided to the City in a format that is compatible with the information technology systems of the City.

30. COPYRIGHTS AND/OR PATENT RIGHTS

30.1 CONTRACTOR warrants that there has been no violation of copyrights and/or patent rights in the manufacturing, producing of selling the goods, shipped or ordered, as a result of this proposal and the CONTRACTOR agrees to hold the City harmless from any and all liability, loss, or expense occasioned by any such violation.

31. COMPLIANCE WITH OCCUPATIONAL SAFETY AND HEALTH

31.1 CONTRACTOR certifies that all services, material, equipment, etc., provided in this bid meets all OSHA requirements. CONTRACTOR further certifies that, if the services, material, equipment, etc., provided, is subsequently found to be deficient in any OSHA requirements in effect on date of delivery or performance, all costs necessary to bring the services, material, equipment, etc. into compliance with the aforementioned requirements shall be borne by the CONTRACTOR.

32. FEDERAL AND STATE TAX

32.1 The City of Lake Worth is exempt from Federal Tax and State Tax for Tangible Personal Property. The Procurement Official will sign an exemption certificate submitted by the successful Proposer. Vendors or contractors doing business with the City of Lake Worth shall not be exempted from paying sales tax to their suppliers for materials to fulfill contractual obligations with the City, nor shall any Vendor/Contractor be authorized to use the City's Tax Exemption Number in securing such materials.

33. PROTECTION OF PROPERTY

33.1 The CONTRACTOR shall at all times guard against damage or loss to the property of the CITY or of other vendors or contractors and shall be held responsible for replacing or repairing any such loss or damage. The CITY may withhold payment or make such deductions as deemed necessary to insure reimbursement or replacement for loss or damage to property through negligence of the successful CONTRACTOR or its agents. The CONTRACTOR shall be responsible to safeguard all of their property such as tools and equipment while on site. The CITY will not be held responsible for any loss of CONTRACTOR property due to theft or vandalism.

34. DAMAGE TO PERSONS OR PROPERTY

34.1 The responsibility for all damage to person or property arising out of or on account of work done under this Contract shall rest upon the CONTRACTOR, and he/she shall save the CITY and political unit thereof harmless from all claims made on account of such damages.

35. WARRANTY

35.1 CONTRACTOR shall provide the warranty as set forth in the RFP.

REMAINDER OF THIS PAGE INTENTIONALLY LEFT BLANK
SIGNATURE PAGE FOLLOWS

IN WITNESS WHEREOF the parties hereto have made and executed this Agreement on the day and year first above written.

CITY OF LAKE WORTH, FLORIDA

By: _____
Pam Triolo, Mayor

ATTEST:

_____
Pamela J. Lopez, City Clerk

Approved as to form and legal sufficiency:

CJA FR
_____
Glen J. Torcivia, City Attorney

CONTRACTOR: **CEDARS ELECTRO-MECHANICAL, INC.**

By: Debra L Chalhoub

[Corporate Seal]

Print Name: Debra L. Chalhoub

Title: president

STATE OF Florida)
COUNTY OF Palm Beach)

The foregoing instrument was acknowledged before me this 20th day of Jan, 20 15 by Debra Chalhoub, as President (title), of Cedars Electro-Mechanical, Inc., a corporation authorized to do business in the State of Florida, and who is personally known to me; or who has produced the following N.A as identification.

JOHN J. GIACOBBA
MY COMMISSION # FF 163211
EXPIRES: December 12, 2018
Bonded Thru Notary Public Underwriters

Notary Public

Print Name: _____
My commission expires: _____

CITY OF LAKE WORTH

7 North Dixie Highway · Lake Worth, Florida 33460 · Phone: 561-586-1600· Fax: 561-586-1750

AGENDA DATE: February 17, 2015, Regular Meeting **DEPARTMENT:** City Commission

---

EXECUTIVE BRIEF

TITLE:
Ratify a board member to the City Recreation Advisory Board

SUMMARY:
This item is to ratify the appointment of Joseph Coicou to the City Recreation Advisory Board to fill an unexpired term ending on July 31, 2016.

BACKGROUND AND JUSTIFICATION:
On February 5, 2013, the Commission adopted an ordinance amending the board member appointment process to allow for the selection of board members by individual elected officials. In accordance with the ordinance, the board appointments would be effective upon ratification by the Commission as a whole.

The Recreation Advisory Board is a seven member board; however, due to the recent resignations of several board members, there remains two active members. With the ratification of Mr. Coicou, this Board still lacks a quorum and cannot take action on issues during a public meeting.

MOTION:
I move to ratify Vice Mayor Scott Maxwell's appointment of Joseph Coicou to the City Recreation Advisory Board to fill an unexpired term ending on July 31, 2016.

ATTACHMENT(S):
Fiscal Impact Analysis – not applicable
Board Membership Application

APPLICANT'S NAME: Joseph Coicou
(Print name)

VOLUNTEER ADVISORY BOARD APPLICATION

THIS APPLICATION IS VALID FOR ONLY ONE (1) YEAR FROM THE DATE ENTERED ON PAGE 5.

Thank you for your interest in serving the City of Lake Worth. The City Commission recognizes that volunteering is important, and your contribution is what makes Lake Worth a great community. Completion of this application is necessary so that the members of the City Commission can thoroughly review each application as part of their consideration for your appointment.

If applying for more than one Board/Committee, please number in order of preference. If you have previously submitted an application, it will be removed from our files unless you mark the board(s) previously applied for on this application. Please choose no more than three Boards/Committees for which you wish to apply. When selecting, indicate your first, second, and third preference. ***You may not serve on two of the following boards/committees at one time: Construction Board of Adjustments and Appeals, Community Redevelopment Agency, Historic Resources Preservation, or Planning & Zoning Boards.***

___ Board of Trustees Employees' Retirement System *
___ Board of Trustees Police Retirement System *
___ Board of Trustees Firefighters' Pension Trust Fund *
___ Board of Trustees Firefighters' Pension Trust Fund – Division II *
X City Recreation Advisory Board
___ City Tree Board
___ Community Redevelopment Agency *
___ Construction Board of Adjustments and Appeals **
___ Electric Utility Advisory Board
___ Finance Advisory Board
___ Historic Resources Preservation Board **
___ Library Board
___ Planning & Zoning Board * **
___ Sister City Board

* Requires that appointee fill out an annual financial disclosure form to be filed with the Supervisor of Elections Office

** Certain skill-set disciplines required

ALL BOARD/COMMITTEES ARE SUBJECT TO THE SUNSHINE LAW

1. **PERSONAL**

Name: Mr./Mrs./Ms. *(circle one)* Joseph Coicou
(print)

Residence: 19 South C St

City: Lake Worth State: Fl ZIP Code: 33460

Proof of residency attached: yes

Mailing Address: (if different from residence)

City: NA State: NA ZIP Code: NA

Home Phone: (____) _____ Business Phone: (____) _____

Cell Phone: (561) 3201675 Email Address: JosephCoicouUSA@gmail.com

Are you a citizen of the United States? YES

Are you a registered Palm Beach County voter? YES

Are you a registered Lake Worth voter? YES

How long have you been a resident of Lake Worth? 26

List all properties owned and/or business interests in Lake Worth? _____
NA

What is your occupation? Supervisor, Mental Health

Employer? SCMHC, Inc.

Business Address: (CRA board only) NA

Are you currently serving on any City advisory Board? YES

If so, which board? Sister City Board

Have you ever served on a City of Lake Worth board? YES

If so, when and which board(s)? since July 2013

Do you serve on any boards in Florida, or are you an elected or appointed state, county, or municipal office holder, or Palm Beach County employee? No

If yes, please name the board, position, etc. NA

2. **EDUCATION**
High School: Lake Worth High Date of Graduation: 2001

College: FAU Degree: BA in Psycology Date of Graduation: 2006

Resume attached? yes _____ no on file

3. **WORK EXPERIENCE**

Supervisor, Mental Health 2013-present

Mobile Crisis Team - 2006-2011

Mental Health Tech - 2004-2006

4. **INTEREST/ACTIVITIES**

Sports & Recreation

Planning and Organizing

Community Awareness

5. **COMMUNITY INVOLVEMENT**

Knights of Columbus Lake Worth Council #3393

-Bought USA Flags to give away for the Veteran's Day Parade

6. **Why do you desire to serve on this board (first preference)**

I want to be more involved in my city and use my ideas to serve the community. I have some ideas to have more people to come outside of thier homes and enjoy the recreation resources of the city.

6. **Why do you desire to serve on this board (second preference)**

NA

6. **Why do you desire to serve on this board (third preference)**

NA

I understand the responsibilities associated with being a board/committee member, and I have adequate time to serve if appointed.

I have read Ordinance No. 2010-29 and Article XIII (Palm Beach County) Code of Ethics attached hereto, and understand the policy on the City of Lake Worth's Code of Ethics. Within 30 days after appointment, I understand that I am required to participate in Ethics Training and submit an Acknowledgement of Receipt form to the City Clerk's Office in order to continue to serve on my appointed board.

PLEASE INITIAL JC

Josep Coicou Digitally signed by Josep Coicou DN: cn=Josep Coicou, o, ou, email=w_coicou@hotmail.com, c=US Date: 2015.01.21 10:09:27 -05'00'

Signature

01/21/2015

Date

THIS APPLICATION IS VALID FOR ONLY ONE (1) YEAR FROM THE DATE SIGNED ABOVE.

NOTE: Information regarding the duties and responsibilities of any board/committee can be found by visiting our website at www.lakeworth.org then select Residents/Volunteer and select the Volunteer Advisory Board application. If you need additional information, please contact the Volunteer Coordinator at sdonaldson@lakeworth.org or by calling 561-586-1730.

EMAIL APPLICATION TO: sdonaldson@lakeworth.org (preferred method)

or

FAX APPLICATION TO: Volunteer Coordinator (561) 586-1750

or

RETURN APPLICATION TO: Volunteer Coordinator
Lake Worth City Hall
7 North Dixie Highway
Lake Worth, FL 33460

SUNSHINE LAW: The primary purpose of government in the Sunshine Law is to assure public access to the decision making processes of public boards and committees. The Sunshine Law extends to discussions and deliberations as well as to formal actions taken by boards and committees.

Statement for	Account number	Bill close date
JOSEPH COICOU	[redacted]	Dec 27, 2014

T · ·Mobile·

Balance

Previous balance	[redacted]
Payments received	[redacted]
Balance forward	[redacted]
Current charges	[redacted]
Total amount due by 01/20/15	[redacted]

Save valuable time each month by enrolling in EasyPay automatic payment. Set up is easy through your My T-Mobile account. Sign up at t-mobile.com/easypay.

JOSEPH COICOU
19 S C ST
LAKE WORTH FL 33460-3650

Current charges

Account and lines	Amount	Change from last month
Account	[redacted]	[redacted]
[redacted]	[redacted]	[redacted]
[redacted]	[redacted]	[redacted]
[redacted]	[redacted]	[redacted]
[redacted]	[redacted]	[redacted]
Total	[redacted]	

Bill highlights

Follow numbers throughout bill.

1. [redacted]
2. [redacted]
3. [redacted]

Visit my.t-mobile.com to pay your bill online, manage your account, get product support, and shop for the latest devices and accessories.

Questions? For more information visit my.t-mobile.com.

Please detach this portion and return with your payment.Please make sure address shows through window.

T · ·Mobile·

Statement for: JOSEPH COICOU
Account number: [redacted]

Pay online: t-mobile.com/pay
Pay by phone: *PAY (*729)

Total amount due by 01/20/15

Amount enclosed

Scan to pay [redacted]

T-MOBILE
PO BOX 790047
ST. LOUIS MO 63179-0047

Sign up for EasyPay - Check box and complete reverse side.

If you changed your address - Check box and record new address on the reverse side

CITY OF LAKE WORTH

7 North Dixie Highway · Lake Worth, Florida 33460 · Phone: 561-586-1600· Fax: 561-586-1750

AGENDA DATE: February 17, 2015, Regular Meeting **DEPARTMENT:** Water Utilities

---

EXECUTIVE BRIEF

TITLE:
Contract with All Webbs Enterprises, Inc. for the reconstruction of Potable Surficial Aquifer Well 12 and Task Order 11 with Mock, Roos and Associates, Inc. for associated construction phase services

SUMMARY:
The Contract and Task Order authorizes the construction phase services and reconstruction of this well, located on Lake Osborne Drive west of I-95 and south of Lake Worth Avenue, to restore its designed water capacity. The Task Order's services will be in conjunction with JLA Geosciences, Inc. as hydrogeologic subconsultant.

BACKGROUND AND JUSTIFICATION:
Surficial Aquifer Well 12 was constructed in 2003, gradually reduced production from 800 gallons per minute (GPM) to 200 GPM and was taken out of service due to low production. Mock Roos & Associates and JLA Geosciences, Inc. were retained to provide engineering and hydrogeologic services to redesign the well and restore its designed water capacity by redrilling the well deeper.

The city then solicited bids from well contractors for the Well 12 reconstruction, under Bid IFB-15-101. Four bids were received and the lowest responsive and responsible bid for the sum of $291,665.00 was from All Webbs Enterprises, Inc. Mock Roos & Associates are recommending award of the Bid to All Webbs, Inc. The engineer and geologic consultant have proposed a Task Order 11 under the current Mock Roos & Associates, Inc. agreement for general engineering services to provide construction phase consulting services for a price of $39,300. These consulting services are more extensive for well drilling than normal construction projects.

MOTION:
I move to approve/disapprove a Contract with All Webbs Enterprises, Inc for the reconstruction of potable Surficial Aquifer Well No. 12 for the lowest responsive and responsible bid price of $291,665.00, and approve/disapprove Task Order 11 with Mock, Roos and Associates, Inc. for construction phase services of $39,300.

Attachments
1) Fiscal Analysis
2) All Webb Enterprises, Inc. bid
3) Bid tabulation
4) Mock Roos recommendation and proposal
5) All Webb Enterprises, Inc. Agreement

FISCAL IMPACT ANALYSIS

A.Five Year Summary of Fiscal Impact

Fiscal Years	2015	2016	2017	2018	2019
Capital Expenditures	$330,965.	0	0	0	0
Operating Expenditures	0	0	0	0	0
External Revenues	0	0	0	0	0
Program Income	0	0	0	0	0
In-Kind Match	0	0	0	0	0
Net Fiscal Impact	$330,965.	$0	$0	$0	$0

No. of Additional Full-Time Employees	0	0	0	0	0

B.Recommended Source of Funds/Summary of Fiscal Impact

The funds have been identified in the FY2014 Water Treatment Operating budget from account 402-7022-533.63-00.

Utilities/Water Production							
Account Number	Account Description	Project #	FY 2015 Budget	Amended Budget	Current Balance	Agenda Item Expenditures	Remaining Balance
402-7022-533.63-00	Improvement of Wells	WT # 1404	$380,000	380,000	$374,420	-$330,965	$43,455

C.Fiscal Review:

Larry Johnson – Director
Clyde Johnson - Finance

BID FORM MUST BE SUBMITTED IN DUPLICATE

BIDDER: All Wells Enterprises, Inc.

PROJECT: Potable Well No. 12 Reconstruction
for City of Lake Worth, FL
Lake Worth Solicitation No. IFB-15-101

DATE: 12/18/14
(Bid Submitted on)

00300
BID FORM

THIS BID IS SUBMITTED TO:

1. The undersigned BIDDER proposes and agrees, if this Bid is accepted, to enter into an Agreement with OWNER in the form included in the Contract Documents to perform and furnish all Work as specified or indicated in the Contract Documents for the Contract Price and within the Contract Time indicated in this Bid and in accordance with the other terms and conditions of the Contract Documents.

2. BIDDER accepts all of the terms and conditions of the Advertisement or Invitation to Bid and Instructions to Bidders, including without limitation those dealing with the disposition of Bid security. This Bid will remain subject to acceptance for 120 days after the day of Bid opening. BIDDER will sign and submit the Agreement with the Bonds and other documents required by the Bidding Requirements within 15 days after the date of OWNER's Notice of Award.

3. In submitting this Bid, BIDDER represents, as more fully set forth in the Agreement, that:

(a) BIDDER has examined copies of all the Bidding Documents and of the following Addenda (receipt of all which is hereby acknowledged):

Date Number

(b) BIDDER has familiarized itself with the nature and extent of the Contract Documents, Work, site, locality, and all local conditions and Laws and Regulations that in any manner may affect cost, progress, performance or furnishing of the Work.

(c) BIDDER has studied carefully all reports and drawings of subsurface conditions and drawings of physical conditions which are identified in the Division 1: General Requirements as provided in paragraph 4.2 of the General Conditions, and accepts the determination set forth in Division 1: General Conditions of the extent of the technical data contained in such reports and drawings upon which BIDDER is entitled to rely.

(d) BIDDER has obtained and carefully studied (or assumes responsibility for obtaining and carefully studying) all such examinations, investigations, explorations, tests and studies (in addition to or to supplement those referred to in (c) above) which pertain to the subsurface or physical conditions at the site or otherwise may affect the cost, progress, performance or furnishing of the Work as BIDDER considers necessary for the performance or furnishing of the Work at the Contract Price, within the Contract Time and in accordance with the other terms and conditions of the Contract Documents, including specifically the provisions of paragraph 4.2 of the General Conditions; and no additional examinations, investigations, explorations, tests, reports or similar information or data are or will be required by BIDDER for such purposes.

(e) BIDDER has reviewed and checked all information and data shown or indicated on the Contract Documents with respect to existing Underground Facilities at or contiguous to the site and assumes responsibility for the accurate location of said Underground Facilities. No additional examinations, investigations, explorations, tests, reports or similar information or data in respect of said Underground Facilities are or will be required by BIDDER in order to perform and furnish the Work at the Contract Price, within the Contract Time and in accordance with the other terms and conditions of the Contract Documents, including specifically the provisions of paragraph 4.3 of the General Conditions.

(f) BIDDER has correlated the results of all such observations, examinations, investigations, explorations, tests, reports and studies with the terms and conditions of the Contract Documents.

(g) BIDDER has given ENGINEER written notice of all conflicts, errors or discrepancies that it has discovered in the Contract Documents and the written resolution thereof by ENGINEER is acceptable to BIDDER.

(h) This Bid is genuine and not made in the interest of or on behalf of any undisclosed person, firm or corporation and is not submitted in conformity with any agreement or rules of any group, association, organization or corporation; BIDDER has not directly or indirectly induced or solicited any other Bidder to submit a false or sham Bid; BIDDER has not solicited or induced any person, firm or corporation to refrain from bidding; and BIDDER has not sought by collusion to obtain for itself any advantage over any other Bidder or over OWNER.

4. BIDDER agrees to perform all the Work described in Contract Documents, subject to adjustments as provided therein, for the Prices BIDDER provides on the Unit Price Schedule (Page 00300– thru 00300–):

5. BIDDER declares it understands that the unit quantities shown on the Bid Form Unit Price Schedule are approximate only and not guaranteed and are subject to either increase or decrease; and that should the quantities of any of the items of Work be increased, the BIDDER agrees to do the additional Work at the unit prices set out herein, and should the quantities be decreased, BIDDER also understands that final payment shall be made on actual quantities completed at the unit prices, and shall make no claims for anticipated profits for any decrease in the quantities.

6. The BIDDER further declares it understands the OWNER may elect to construct only a portion of the Work covered by these Documents and BIDDER agrees to perform that portion of the Work for which BIDDER is awarded a Contract at the unit prices quoted herein.

7. BIDDER agrees that the Work:

will be substantially complete within 120 calendar days after the date when the Contract Time commences to run as provided in paragraph 2.3 of the General Conditions, and completed and ready for final payment within 150 calendar days after the date when the Contract Time commences to run.

BIDDER accepts the provisions of the Agreement as to liquidated damages in the event of failure to complete the Work on time.

8. The following documents are attached to and made a condition of this Bid:

(a) Required Bid Security in the form of Bid Bond (attached).

(b) Unit Price Schedule on Page(s) 00300-5.

(c) Trench Safety Affidavit on Page(s) 00300-6.

(d) Schedule of Subcontractors (Page(s) 00300-7).

(e) Schedule of Suppliers, Equipment and Materials (Page(s) 00300-8).

(f) Sworn Statements Under Section 287.133(3)(a), Florida Statutes, on Public Entity Crimes on Page(s) 00300-9 and 00300-10.

(g) Certification of Drug Free Workplace Program on Page 00300-11.

9. Communications concerning this Bid shall be telephoned or addressed to:

The phone number and address of BIDDER indicated below.

10. The terms used in this Bid which are defined in the General Conditions of the Construction Contract included as part of the Contract Documents have the meanings assigned to them in the General Conditions.

11. BIDDER's Florida Contractor's License No. CGC035886.

12. BIDDER covenants that it is qualified to do business in the State of Florida and has attached evidence of BIDDER's qualification to do business in the State of Florida, or if not attached, BIDDER covenants to obtain such evidence within five days of request by OWNER to provide evidence.

If BIDDER is:

An Individual

By _____ (SEAL)
(Individual's Name)

_____
(Signature)

doing business as _____

Business address: _____

_____

Phone No. : _____

A Partnership

By _____ (SEAL)
(Firm Name)

_____
(General Partner) (Signature)

Business address: _____

_____

Phone No. : _____

A Corporation

By All Webbs Enterprises, Inc. (SEAL)
(Corporation Name)

Florida
(State of Incorporation)

By David Webb Jr.
(Name of Person Authorized to Sign)

Vice President
(Title)

[signature]
(Signature)

(Corporate Seal)

Attest _____
(Secretary)

_____
(Signature)

Business address: _____

_____

Phone No. : _____

UNIT PRICE SCHEDULE

Item No.	Item Description	Quantity	Unit	Unit Price	Total Amount
	Schedule A - General Requirements				
A-1	Bonds and Insurance	1	LS		$ 10,000.00
A-2.	Mobilization/Demobilization/General Conditions	1	LS		$ 10,000.00
A-3.	Permit Fees	1	LS		$ 2,000.00
A-4.	Video Taping	1	LS		1,000.00
A-5.	Prepare and Furnish Record Drawings	1	LS		$ 5,000.00
A-6.	General Allowance	1	LS		$ 20,000
	Total Schedule A				$ 48,000.00
	Schedule B - Well Reconstruction				
B-1.	Remove wellhead, column pipe, and well pump	1	LS		$ 12,000.00
B-2.	Remove existing riser casing and well screen	1	LS		$ 8,000.00
B-3.	Clean out borehole of existing well screen (total depth approximately 150 feet) to a nominal 19-inch diameter	70	FT	$ 150.00	$ 10,500.00
B-4.	Drill nominal 8-inch diameter pilot hole from base of existing well (total depth approximately 150 feet) to 250 feet	100	FT	$ 100.00	$ 10,000.00
B-5.	Geophysical Logging (Complete)	1	LS		$ 5,000.00
B-6.	Ream 8-inch diameter pilot hole to nominal 19-inch diameter borehole	100	FT	$ 100.00	$ 10,000.00
B-7.	Furnish and install 12-inch diameter stainless steel well screen from 200 feet to 250 feet	50	FT	$ 300.00	$ 15,000.00
B-8.	Furnish and install 12-inch diameter SDR17 PVC riser casing to 200 feet	200	FT	$ 15.00	$ 3,000.00
B-9.	Furnish and install gravel pack	300	CF	$ 20.00	$ 6,000.00
B-10.	Airlift Development	20	HR	$ 200.00	$ 4,000.00
B-11.	Jetting with simultaneous Airlift Development	80	HR	$ 200.00	$ 16,000.00
B-12.	Pump Development	40	HR	$ 200.00	$ 8,000.00
B-13.	Conduct Step Rate Test	8	HR	$ 200.00	$ 1,600.00
B-14.	Conduct Pre- and Post-Construction Video Logging	2	EA	$ 2,500.00	$ 5,000.00
B-15.	Furnish and install 6" Certa-Loc column pipe and appurtenances	100	FT	$ 50.00	$ 5,000.00
B-16.	Furnish and Install Well Pump	1	LS		$ 35,000.00
B-17.	Wellhead piping modifications	1	LS		$ 20,000.00
B-18.	Disinfection and Water Quality Sampling	1	LS		$ 5,000.00
B-19.	Painting and miscellaneous	1	LS		$ 4,000.00
B-20.	Extra work by drilling crew & drilling equipment	8	HR	$ 200.00	$ 1,600.00
B-21.	Extra work by drilling crew	8	HR	$ 150.00	$ 1,200.00
B-22.	Standby time with rig and drilling crew on-site	8	HR	$ 200.00	$ 1,600.00
B-23.	Standby time with rig on-site and crew off-site	8	HR	$ 150.00	$ 1,200.00
B-24	Formation Water Disposal System	1	LS		$ 10,000.00
B-25.	Fence and Site Restoration	1	LS		$ 10,800.00
	Total Schedule B				$ 209,500.00

UNIT PRICE SCHEDULE

Item No.	Item Description	Quantity	Unit	Unit Price	Total Amount
	Schedule C - Electrical and Instrumentation				
C-1.	Flowmeter	1	LS		$ 5,940.00
C-2.	Instrumentation	1	LS		$ 22,600.00
C-3.	Misc. electrical wire, conduit, and boxes	1	LS		$ 5,625.00
	Total Schedule C				$ 34,165.00
	Total Bid - Schedules A through C				$ 291,665.00

Total Bid (in words):

Two hundred ninety one thousand six hundred sixty five dollars

PROJECT NO: B4015.00

TRENCH SAFETY AFFIDAVIT

(FAILURE TO COMPLETE THIS FORM MAY RESULT IN THE BID BEING DECLARED NON-RESPONSIVE)

All Webbs Enterprises, Inc. (NAME OF CONTRACTOR) hereby provides written assurance that compliance with applicable Trench Safety Standards identified in the Occupational Safety & Health Administration's Excavation Safety Standards, (OSHA) 29 C.F.R.S. 1926.650 Subpart P will be adhered to during trench excavation in accordance with Florida Statutes 553.60 through 553.64 inclusive (1990), "Trench Safety Act".

The undersigned acknowledges that included in the various items of the proposal and in the Total Bid Price are costs for complying with the Florida "Trench Safety Act" as summarized below: (Attach additional sheets as necessary)

Schedule Item	Trench Safety Measure (Slope, Trench Shield, etc.	Cost
B17	Slope	$ 1.00
		$
		$
		$
		$
		$
	Total	$

(Signature) 12/15/14 (date)

STATE OF Florida

COUNTY OF Palm Beach

Subscribed and Sworn to (or affirmed) before me on 12/15/14 (date) by David Webb, Jr (name). He/she is personally known to me or has presented _____ (type of identification) as identification.

Vivian L. Murphy — Notary Public Signature and Seal

Vivian L. Murphy — Print Notary Name and Commission No.

VIVIAN L. MURPHY
Notary Public - State of Florida
My Comm. Expires Apr 26, 2018
Commission # FF 079914
Bonded Through National Notary Assn.

SCHEDULE OF SUBCONTRACTORS

List Proposed Subcontractors	Category of Work
Stuart Fence	Fence
Energy Efficient	Electrical

SCHEDULE OF EQUIPMENT AND MATERIALS

Description	Manufacturer	Model
See attached Equipment List		

All Webb's Enterprises, Inc.
Equipment

The following is a list of equipment owned by All Webb's Enterprises, Inc. Not all equipment will be utilized. All equipment is in excellent working order.

8,000 SQUARE FOOT REPAIR FACILITY LOCATED IN JUPITER, FLORIDA WITH ONSITE DIESEL MECHANIC

2004 SOILMEC MR 7000 RIG WITH CAT 3408 AND ALL ACCESSORIES

2004 SOILMEC HTD TOPHEAD DRIVE (BROCHURE ATTACHED UNDER SEPARATE COVER)
1981 CHALLENGER 360 DRILL RIG WITH MUD SYSTEMS; 3408 CAT 485 HP TURBO, ALLISON 5 SPEED AUTOMATIC TRANSMISSION, 18" HYDROMATIC, WESTINGHOUSE ELECTRIC WELDER, FOSTER CAT HEADS WITH MAKEUP AND BREAKOUT TONGS "C" AND "B", BEAN TRIPLEX WASH DOWN PUMP, HOWARD TURNER 18" TABLE SLIPS, 97' SINGLE PIECE MAST WITH STATIC HOOK LOAD (SHL) 200,000 POUNDS, 10.5 SUB STRUCTURE V-DOOR WITH 60' CAT WALKS AND DEAD MAN, PIPE RACKS, HALIBURTON WIRE LINE UNIT, HYDRAULIC SAND LINE, WEIGHT INDICATORS, 7/8" WIRE ROPE, RIG LIGHTS, TRANSFORMER SUB BASE, RAMPS, CRIBBING AND JACKS

1981 CHALLENGER 320 DRILL RIG WITH MUD SYSTEMS; 3408, 485 HP TURBO CAT, 5-SPEED ALLISON AUTOMATIC TRANSMISSION, 18" HYDROMATIC, 84' SINGLE PIECE MAST WITH STATIC HOOK LOAD (SHL) OF 150,000 POUNDS AND RACKING BOARD, SANDLINE, WEIGHT INDICATORS, TONGS, 18" HOWARD TURNER TABLE SLIPS, ELEVATORS, BUSHINGS, SUBS, BITS, TOOLS, DOG HOUSE, FUEL TANKS, 2-MISSION 75 TON BLOCKS, 7/8" CABLE, GEOGRAPH, BEAR AUTO DRILLER, WIRE LINE UNIT FLOW LINES, BOP, HEADERS

1994 SCHRAMM ROTADRILL T300M WITH PORTABLE MUD SYSTEM; 210 FORD F800 1460 TURBO CHARGED DIESEL WITH 13 SPEED TRANSMISSION, CHELSEA 912 PTO, TOP HEAD ROTATION, RAPID FEED PULLUP AND PULLDOWN, 7500 BARE DRUM PULLOVER JIB BOOM, 10,000 BARE DRUM PULLOVER FIXED PULLEYS, MISSION MAGNUM 3X4X13 CENTRIFUGAL PUMP(300 GPM @ 200PSI), LeROI 250 ROTARY SCREW TYPE AIR COMPRESSOR (250 CFM @ 150 PSI, 10 PIPE LAZY SUSAN)

LOGGING TRUCK WITH 1998 CENTURY GEOPHYSICAL COMPULOG III DOWNHOLE DIGITAL LOGGING SYSTEM, ALL LOGGING TOOLS, STRIPPERS, EXTRA CABLE, CABLES, CENTRALIZERS MOUNTED IN 1981 FORD PANEL VAN WITH 5000 KW HONDA GENERATOR AND ELECTRIC DRAWDOWNS AND ALL RELATED EQUIPMENT

2003 LAVAL R-2000 DUAL CAM WITH 360° ROTATION, INSTACAM VIDEO PRINTER, VIDEO TITLER AND DVD RECORDER, HYDRAULIC WINCH WITH 4,000 FT CABLE

1981 COOPER RIG WITH SPICER 5 SPEED TRANSMISSION, SINGLE DRUM DRAW WORKS ASSEMBLY WITH WITCHITA CLUTCH, 55' MAST WITH 35,000 LB HOOK LOAD, RAMSEY H-700 WINCH

1978 INTERNATIONAL CEMENT PUMP TRUCK WITH BS PAC MAHER HIGH PRESSURE TRIPLEX PUMP, 2-15 BARREL RIBBON AUGER MIXING AND BLENDING TANKS, 1-150 BAG CEMENT POT, ALL CONNECTIONS AND HOSES

2000 BESSER APPCO CEMENT FILTER VENT

1998 GMC MANITEX BOOM TRUCK C7H064, 275HP 56,000 GVW, 36" BULKHEAD,22' STEEL FLATBED, 77' BOOM, 3 SEC PUMP, 70 GALLON HYD TANK, 9/16" WIRE ROPE DIA, 5 TON WEIGHTED HOOK, HYCAS OVERLOAD WARNING, 15T 1SHV, F/2-3 PART LINE, 29' FIXED JIB, PTO MUNCIE, AIR BRAKE SYSTEM, 6.8 CAT DIESEL 275 HP ENGINE, DUAL BATTERIES, 10 SPEED RT7608LL FULLER TRANS, 18K EATON FRONT AXLE, 40K REAR AXLE, AM/FM, STEREO RADIO, AIR SUSPENSION HIGH BACK DRIVER SEAT.

1992 FORD F-450 WITH BOOM

1986 FORD F-450 WITH CRANE

1970 INTERNATIONAL BOOM TRUCK

1995 FORD F-350 FLAT BED

1983 FORD FLATBED

1980 BRIGADERE ROAD TRACTOR

1990 FORD F-450 WITH WELDER

1987 ISUZU SUPPORT TRUCK WITH WELDERS

1989 FORD RANGER PICKUP TRUCK

1993 CHEVY PICK UP TRUCK

1970 FORD PICKUP

1997 FORD F-150 PICK UP TRUCK

1975 MACK TRUCK WITH CRANE

1972 MACK SEMI WITH ROLLING TAIL BOARD AND 64 TON TULSA WINCH

1974 INTERNATIONAL TRANS STAR 4200 TRACTOR WITH 4,000 GALLON WATER TANK, HOSES AND PUMP

1968 MACK SEMI TRUCK

1989 FREIGHTLINER 80,000 LB TRACTOR

91 HOBBS 42' TRAILER WITH HYDRAULICALLY RAISED DOG HOUSE, GEOGRAPH BEAR AUTO DRILLER, LOCKERS, TOOL BOXES, KNOWLEDGE BOX, TOOL RACKS, STAIRS, 1200 GALLON FUEL TANK, 2-DRUM 90 NUT OIL TANK, 2 DRUM HYDRAULIC OIL TANK, 2 DRUM 40 WT OIL TANK

1996 CHALLENGER 50 TON LOW BOY

1976 GROVE 15 TON ROUGH TERRAIN CRANE

1991 LIEBHERR 2 1/2 YARD FRONT END LOADER

10 SEMI TRAILERS (VARIOUS)

LINCOLN PIPE LINE SPECIAL WELDER, LEADED WITH ALL NECESSITIES

MILLER TRAIL BLAZER WELDER WITH LEADS AND ALL NECESSITIES

3 TANK MUD SYSTEM WITH SHALE SHAKER, DESANDER, TWIN CENTRIFUGAL PUMPS, MIXING TANK, CHEMICAL TANK

3 TANK MUD SYSTEM WITH ELECTRIC MOTOR CONTROL BREAKERS & WIRING, DESANDERS DUEL SHALE SHAKER, DESANDERS, AGITATORS HOPPER SYSTEM AND CONNECTORS

1 CATERPILLAR 416-4 WHEEL DRIVE BACKHOE

1 CATERPILLAR 430-D WHEEL DRIVE BACKHOE

STINGER 63', 18,000 BOOM MOUNTED ON MACK TRACTOR WITH OUT RIGGERS WOODEN OVER STEEL 16' B&D WITH LIFTING BAILS, TOOLS, CHAINS, SLINGS AND TIE DOWNS

5-PACKERS, 2" TO 26" WITH FITTINGS, 1-5000' SPOOL 1/4" S.S. INFLATION LINE, 1-3000' SPOOL 1/4" S.S. INFLATION LINE, INFLATION MANIFOLD AND EXPANSION SLEEVES

BULK UNIT SEMI TRAILER 500 BAG CAPACITY WITH JOY PNEUMATIC AIR COMPRESSOR AND DISCHARGE MANIFOLD

ELLIS WILLIAMS 7 1/4 X 15 MUD PUMP POWERED BY 6V 92 SILVERSTREAK DETROIT, AIR CONNECTIONS HOPPER AND SUCTION LINES

EMSCO D-300 7.5 X 14 MUD PUMP POWERED BY TWIN 4-71 DETROITS SUCTION AND DISCHARGE HOSES

375 SW GENERATOR POWERED BY B12 CUMMINGS WITH CONTROL BOXES AND WIRING MOUNT ON BROWN SEMI TRAILER

INGERSOL RAND 300/200 AIR COMPRESSOR WITH HOSES

INGERSOL RAND 400/200 AIR COMPRESSOR

3-TANK MUD SYSTEM

ELLIS WILLIAMS MUD PUMP 14-400

21,000 GALLON FRAC TANKS

7,500 GALLON STEEL TANKER

FITTINGS, VALVES, RUBBERS, GASKETS, BOP RINGS, CLUTCHES AIR EQUIPMENT, ETC. ALL HANDLING EQUIPMENT, BITS, SUBS, COLLARS AND DRILL PIPE, CASINGS, TOOLS AND HOSES

3-8" DRILL COLLARS 6 5/8 API ; 6-6 1/2" DRILL COLLARS 4 1/2 H-90; 4-4 1/2" DRILL COLLARS 3 1/2 IF; 16" REAMING BARREL WITH 8" COLLAR; 18" REAMING BARREL WITH 8" COLLAR; 24" REAMING BARREL WITH 8" COLLAR; LIFTING NUBBS; 4 1/2, 3 1/2, AND 2 7/8 ELEVATORS; 2300' 3 1/2 IF DRILL PIPE; 2300' 2 7/8 PAC DRILL PIPE; 7-3 1/8" DRILL COLLAR WITH PAC CONNECTIONS; 2500' 1 1/2" HYDRILL TUBING; 6", 8", 12" STEEL & FIBERGLASS CASINGS; EXTRA "C" TONGS; 2 SETS TORCHES; 6 5/8" OCTAGON KELLY BAR WITH 6 5/8" API CONNECTIONS; 3.5" ID HOWARD TURNER 100 TON SWIVEL; 20" ROTATING HEAD WITH FLOWLINE; 6" KELLY BAR WITH ROLLER BUSHING; 2.5" SQUARE KELLY BAR WITH ROLLER BUSHING; 3.5" SQUARE KELLY BAR WITH BUSHING; 4 1/4" SQUARE KELLY BAR WITH BUSHING; 3-9" DRILL COLLARS 7 5/8" API; 8-8" DRILL COLLARS . 6 5/8" API; 1-13" DRILL COLLARS 6 5/8" API; 6-6 1/2" DRILL COLLARS 4 1/2" FULL HOLE; ALL CROSSOVER SUBS; 2300' OF 4 1/2" XH DRILL PIPE; ELECTRICAL CONTROLS; ROTATING WELL HEAD; 5-8" DRILL COLLARS; 4-6" DRILL COLLARS, ETC.

SWORN STATEMENT UNDER SECTION 287.133(3)(a), FLORIDA STATUTES, ON PUBLIC ENTITY CRIMES

THIS FORM MUST BE SIGNED IN THE PRESENCE OF A NOTARY PUBLIC OR OTHER OFFICER AUTHORIZED TO ADMINISTER OATHS.

1. This sworn statement is submitted to City of Lake Worth, Florida
[print name of the public entity]
by David Webb Jr., Vice President
[print individual's name and title]
for All Webbs Enterprises, Inc.
[print name of entity submitting sworn statement]
whose business address is 309 Commerce Way
Jupiter, FL 33477
and (if applicable) its Federal Employer Identification Number (FEIN) is 59-2415764
(If the entity has no FEIN, include the Social Security Number of the individual signing this sworn statement: _____.)

2. I understand that a "public entity crime" as defined in Paragraph 287.133(1)(g), Florida Statutes, means a violation of any state or federal law by a person with respect to and directly related to the transaction of business with any public entity or with an agency or political subdivision of any other state or of the United States, including, but not limited to, any bid or contract for goods or services to be provided to any public entity or an agency or political subdivision of any other state or of the United States and involving antitrust, fraud, theft, bribery, collusion, racketeering, conspiracy, or material misrepresentation.

3. I understand that "convicted" or "conviction" as defined in Paragraph 287.133(1)(b), Florida Statutes, means a finding of guilt or a conviction of a public entity crime, with or without an adjudication of guilt, in any federal or state trial court of record relating to charges brought by indictment or information after July 1, 1989, as a result of jury verdict, nonjury trial, or entry of a plea of guilty or nolo contendere.

4. I understand that an "affiliate" as defined in Paragraph 287.133(1)(a), Florida Statutes, means:

   1. A predecessor or successor of a person convicted of a public entity crime; or
   2. An entity under the control of any natural person who is active in the management of the entity and who has been convicted of a public entity crime. The term "affiliate" includes those officers, directors, executives, partners, shareholders, employees, members, and agents who are active in the management of an affiliate. The ownership by one person of shares constituting a controlling interest in another person, or a pooling of equipment or income among persons when not for fair market value under an arm's length agreement, shall be a prima facie case that one person controls another person. A person who knowingly enters into a joint venture with a person who has been convicted of a public entity crime in Florida during the preceding 36 months shall be considered an affiliate.

5. I understand that a "person" as defined in Paragraph 287.133(1)(c), Florida Statutes, means any natural person or entity organized under the laws of any state or of the United States with the legal power to enter into a binding contract and which bids or applies to bid on contracts for the provision of goods or services let by a public entity, or which otherwise transacts or applies to transact business with a public entity. The term "person" includes those officers, directors, executives, partners, shareholders, employees, members, and agents who are active in management of an entity.

6. Based on information and belief, the statement which I have marked below is true in relation to the entity submitting this sworn statement. [Please indicate which statement applies.]

✓ Neither the entity submitting this sworn statement, nor any officers, directors, executives, partners, shareholders, employees, members, or agents who are active in management of the entity, nor any affiliate of the entity has been charged with and convicted of a public entity crime subsequent to July 1, 1989.

_____ The entity submitting this sworn statement, or one or more of the officers, directors, executives, partners, shareholders, employees, members, or agents who are active in management of the entity, or an affiliate of the entity has been charged with and convicted of a public entity crime subsequent to July 1, 1989.

_____ The entity submitting this sworn statement, or one or more of its officers, directors, executives, partners, shareholders, employees, members, or agents who are active in the management of the entity, or an affiliate of the entity has been charged with and convicted of a public entity crime subsequent to July 1, 1989. However, there has been a subsequent proceeding before a Hearing Officer of the State of Florida, Division of Administrative Hearings and the Final Order entered by the Hearing Officer determined that it was not in the public interest to place the entity submitting this sworn statement on the convicted vendor list. [attach a copy of the final order]

I UNDERSTAND THAT THE SUBMISSION OF THIS FORM TO THE CONTRACTING OFFICER FOR THE PUBLIC ENTITY IDENTIFIED IN PARAGRAPH 1 (ONE) ABOVE IS FOR THAT PUBLIC ENTITY ONLY AND, THAT THIS FORM IS VALID THROUGH DECEMBER 31 OF THE CALENDAR YEAR IN WHICH IT IS FILED. I ALSO UNDERSTAND THAT I AM REQUIRED TO INFORM THE PUBLIC ENTITY PRIOR TO ENTERING INTO A CONTRACT IN EXCESS OF THE THRESHOLD AMOUNT PROVIDED IN SECTION 287.017, FLORIDA STATUTES FOR CATEGORY TWO OF ANY CHANGE IN THE INFORMATION CONTAINED IN THIS FORM:

[signature]

12/15/14
[date]

STATE OF FL

COUNTY OF Palm Beach

Subscribed and Sworn to (or affirmed) before me on 12/15/14 [date] by David Webb Jr. [name]. He/she is personally known to me or has presented _____ [type of identification] as identification.

[Notary's Signature and Seal]

Vivian L. Murphy
Print Notary Name and Commission No.

Form PUR 7068 (Rev. 04/10/91)
M/R 03/06/92

VIVIAN L. MURPHY
Notary Public - State of Florida
My Comm. Expires Apr 26, 2018
Commission # FF 079914
Bonded Through National Notary Assn.

CERTIFICATION OF DRUG FREE WORKPLACE PROGRAM

I certify the firm of All Webbs Enterprises, Inc. maintains a drug-free workplace program, and that the following conditions are met:

1. We publish a statement notifying employees that the unlawful manufacturer, distribution, dispensing, possession, or use of a controlled substance is prohibited in the workplace and specifying that actions will be taken against employees for violations of such prohibitions.

2. We inform employees about the dangers of drug abuse in the workplace, the company's policy of maintaining a drug-free workplace, any available drug counseling, rehabilitation, and employee assistance programs, and the penalties that may be imposed upon employees for drug abuse violations.

3. We give each employee engaged in providing the commodities or contractual services that are under bid a copy of the statement specified in subsection one (1).

4. In the statement specified subsection one (1) we notify the employee that; a condition of working in the commodities or contractual services that are under bid, the employee will abide by the terms of the statement and will notify the employer of any conviction of, or plea of guilty nolo contendere to any violation of Chapter 893 or of any controlled substance law of the United States or any state, for a violation occurring in the workplace no later than five (5) days after such conviction.

5. We impose a sanction on, or require the satisfactory participation in a drug abuse assistance or rehabilitation program if such is available in the employee's community, by any employee who is convicted.

6. We make a good faith effort to continue to maintain a drug-free workplace through implementation of this section.

As the person authorized to sign the statement, I certify that this firm complies fully with the above requirements.

Contractor's Signature

BIDDERS'S QUALIFICATION QUESTIONAIRE

(Include in Bid Envelope)

THE UNDERSGINED GUARANTEES THE TRUTH AND ACCURANCY OF ALL STATEMENTS AND ANSWERS HEREIN CONTAINED:

A. Any information judged by OWNER OR ENGINEER to be false is grounds for rejection of Bid and Cost Proposal. (Use additional sheets as required to provide the required information.)

B. The individual who holds the Well Drilling License shall be active in the management and ownership of the firm awarded the work and be available to provide their expertise for the project on an ongoing-basis. Provide the name of this individual for the complete duration of this project.

David Webb Sr., License # 2046

1a. State the numbers of years your organization has been doing business in Florida.

In business since 1978 (36 years). Incorporated as All Webb's Enterprises, Inc. since 1983 (31 years).

1b. State the numbers of years your organization has been doing business as a Licensed Well Driller in Florida. 36 years total, 31 years as AWE

2a. We normally perform 90 % of the work with our own forces.
List trades below: AWE will subcontract:

Electrical — Fencing

Instrumentation & Controls — Pumps (Vendor)

3. Have you ever failed to complete work awarded to you? If so, state where when and why

No

4. BIDDER shall have constructed at least ten Surficial Aquifer supply wells within the past five years.

Project Name: See attached "Bidder's References"

Contract Amount: _____

Owner: _____ Phone No: _____

Consultant /Engineer _____ Phone No. _____

Owner Contact: _____ Phone No. _____

Type of Well (details): _____

Total Depth: _____

Date Completed: _____

Contract Schedule (days): _____

Actual Completion Schedule: _____

5. BIDDER shall demonstrate the ability to complete projects on time within the contract completion dates. List ALL within the last three years (started, underway, or completed):

Project: See attached "Bidder's References"

Contract Schedule (days) _____

Actual Completion Schedule (days) _____

6. List ALL projects within the past five years (started, underway, or completed) in which liquidated damages (LD) were incurred, either directly or indirectly:

Project: None

LD Amount: _____

LD Unit Price: _____

7. BIDDER shall demonstrate the proficiency in the performance of the following activities. Please provide specific experience with Surficial Aquifer supply wells over the past five years (started, underway and completed). Include the names and experience of subcontractors as applicable.

Well Cementing: In-house } Performed by AWE

Geophysical Logging: In-house } See attached

Surface and Piping Facilities: In-house } "Bidder's References"

8. BIDDER shall specifically name proposed superintendents and drillers to be utilized on this project and identify years of experience in well drilling and quantity of wells

completed by the proposed superintendents and drillers within the previous five years. It must be demonstrated that the experience is with the current bidder.

Name: See attached Item 8 (separate sheet)

Position:

Years of Experience with BIDDER:

Type of Work Responsible For:

License:

9. BIDDER shall identify below the information regarding last similar project the rig was utilized on:

Project: See attached Item 9 (separate sheet)

Owner: Phone No:

Completion Date:

10. BIDDER shall provide information related to the job safety and safety rating of the corporation: See attached form EMR = 0.78

11. Please attach copies of your most recent audited financial statement.

To be provided if contemplating award.

12.

(a) Please state your bonding capacity per project. $10 Million

(b) Please state your total bonding capacity. $15 Million

(c) Please provide name, address and contact person of your bonding company.

John Harris
Johnson and Company
801 N. Orange Avenue, Suite 510.
Orlando, FL 32801 Phone: (407) 843-1120

13. State the true, exact, correct and complete name of the partnership, corporation or trade name under which you do business. (If corporation, state the name of the president and secretary. If a partnership, state the name of all partners. If a trade name, state the name of the individuals who do business under the trade name).

All Webbs Enterprises, Inc.
David Webb Sr. - President, Deborah Webb - Secretary

(a) The business is a Florida Corporation

(b) The address of the principal place of business is: 309 Commerce Way Jupiter FL 33458

(c) The name of the corporate officers, or partners, or individuals doing business under a trade name are as follows:

David Webb Sr. President, David Webb Jr. Vice President
Deborah Webb - Secretary

If a Corporation, attach a copy of the most recent good standing certificate issued by the Secretary of State of Florida.

Date 12/17/14

Bidder: All Webbs Enterprises, Inc.

By: [signature]

Title: Vice President

Mailing Address: 309 Commerce Way
Jupiter, FL 33458

END OF BIDDER'S QUALIFICATION QUESTIONNAIRE

BIDDER REFERENCES

ALL WEBBS

Key
IW - Injection Well
MW - Monitoring Well
PW - Floridan Production Well
ASR - Aquifer Storage & Recovery
IND - Industrial Well
M&R - Maintenance and Rehabilitation

References provided below are for projects awarded to and implemented by All Webbs Enterprises, Inc.

PROJECT ID NO.	CLIENT /ADDRESS/CONTACT	CONSULTANT	PROJECT TITLE AND DESCRIPTION (SEE KEY ABOVE)	APPROXIMATE VALUE	% COMPLETE AS OF 5/26/2014	START DATE	END DATE
1	Palm Beach County 8100 Forest Hill Boulevard West Palm Beach, FL 33413 Joseph Tanacredi, P.E. Ph: (561) 493-6088 Fax: (561) 493-6085	James Andersen JLA Geosciences, Inc. Jupiter, Florida 33458 Ph: (561) 746-0228 Fax: (561) 746-0119 Email: jandersen@jlageosciences.com	Water Treatment Plant No. 11 Wells 9 & 10 Maintenance and Rehabilitation of 7 Wells Installation and Testing of 2 Production Wells **M&R, PW**	2,576,190.00	40%	Mar-14	Ongoing
2	City of Wellington 1100 Wellington Trace Wellington, FL 33414 Ms. Karla Berroteran Utilities Supervisor Ph: (561) 753-2465 Fax: (561) 904-5936 Email: kberroteran@wellingtonfl.gov	N/A	Well Inspections, Rehabilitation, and Drop Pipe Modifications on Well R1, R2, R3 and R4. Including Video logging and brushing, as necessary. **M&R**	$81,884.00	80%	Jun-13	Ongoing
3	City of Lake Worth City Hall, 2nd Floor 7 North Dixie Highway Lake Worth, FL 33460 (561) 586-1674	Mock, Roos & Associates, Inc. Engineers-Surveyors-Planners 5720 Corporate Way West Palm Beach, FL	Rehabilitation of Well 9R. Includedwell head and pump removal, inspection, video-logging, brushing acidization pump reinstallation and wellhead replacement. **M&R**	$169,304.00	90%	Feb-14	Ongoing
4	The City of Coral Springs 9551 West Sample Road Coral Springs, FL 33065 Ph: Fax:	Eckler Engineering	Rehabilitation of Wells #4 and #11. Included wellhead and pump removal, inspection, video-logging, brushing, acidization, pump reinstallation and wellhead replacement. **M&R**	$133,300.00	90%	Feb-14	Ongoing

PROJECT ID NO.	CLIENT /ADDRESS/CONTACT	CONSULTANT	PROJECT TITLE AND DESCRIPTION (SEE KEY ABOVE)	APPROXIMATE VALUE	% COMPLETE AS OF 5/26/2014	START DATE	END DATE
5	Fellsmere Joint Venture Fellsmere FL, 32948 Florida Organic Aquaculture, In 930 West Indiantown Road, #2 Jupiter, FL 33458	Jim McGrath L.S. Sims & Associates 1530 US Hwy 1 Rockledge, FL 32955 Ph: (321) 504-4046 Fax: (321) 504-4035 Email: jmcgrath@simsenv.com	Industrial Supply Well System Construction and Testing Permit Application Deviation Surveys and Geophysical Logs Fluid Handling, Straddle Packer Tests, Mechanical Integrity Testing FRP ^' to 1,948 feet, Open hole to 2,300 feet **IND**	$550,000.00	100%	Jul-13	May-14
6	City of Cocoa Beach Cocoa Beach, FL 32931	Brad T. Blais Quentin L. Hampton Associates, Inc. Port Orange, FL 32127 Ph: (386) 761-6810 Email: bblais@glha.com	Reclaimed Water ASR and Test Wells PW- 36" casing to 185' ASR-1: 18" casing to 1,230' , Open 1,230' - 1,320' SZMW -1: 6" casing to 1,235', Open 1,235' - 1,312' SMW-1: 14" casing to 800', Open 800' - 950' Geophysical logs Step-Drawdown Testing **ASR**	$2,482,842.90	100%	Jul-12	Sep-13
7	Sarasota County 1660 Ringling Boulevard Sarasota County, FL 34236	Jack Gibson Ph: (941) 650-2606 Email: jgibson@scgov.net	Venice Gardens Deep Injection Well 1350 Jacaranda Blvd. Venice Gardens, FL 34293 Construction of 24" Class 1 Industrial Test Injection Well approximately 2,000' deep. **IW**	$3,500,000.00	100%	Apr-10	Apr-13
8	Tropicana Products, Inc. Fort Pierce Facility 6500 Glades Cut-Off Road Fort Pierce, FL 34981 Scott Davis Email: Scott.Davis@tropicana.com Ph: (772) 465-2030	Jim McGrath L.S. Sims & Associates, Inc. 1530 US Highway 1 Rockledge, FL 32955 Ph: (321) 549-9405 Fax: (321) 504-4035 Email: jmcgrath@simsenv.com	Tropicana Injection Well Rehabilitation Back-flush, acid injection-kill well, remove wellhead, install high-pressure acid injection header with BOP. Inject acid and flush. Solids disposal. **IW-M&R**	$172,926.00	100%	Oct-13	Nov-13
9	North Regional WWTP Broward County 2401 West Copans Road Pompano Beach, FL 33069	Michael Wengrenovich Hazen and Sawyer Boca Raton, FL 33431 Ph: (954) 687-2949 Fax: (954) 987-8535	Broward County UIC Class I-2012 North Regional WWTP Monitoring Well Construct Floridan Aquifer MW and abandon MW. Dual-Zone Monitoring Well: 1,200 feet/1,600 feet **MW**	$1,300,000.00	100%	Jan-12	Sep-12
10	John's Island Water Management, Inc. 1 Turtle Beach Road Vero Beach, FL 32963 (772) 231-3957	James Andersen JLA Geosciences, Inc. Jupiter, Florida 33458 Ph: (561) 746-0228 Fax: (561) 746-0119 Email: jandersen@jlageosciences.com	Acidization - 7,0000 gallons F&I 30" casing to 150', drill 12" pilot hole to 620', log hole, ream 28" hole to 600', caliper logging, install 24" casing to 600', drill pilot hole to 2,200', geophysical logging, ream hole to 23" to 900', step rate test, video logging. **PW**	$535,046.00	100%	Mar-11	Aug-12

PROJECT ID NO.	CLIENT /ADDRESS/CONTACT	CONSULTANT	PROJECT TITLE AND DESCRIPTION (SEE KEY ABOVE)	APPROXIMATE VALUE	% COMPLETE AS OF 5/26/2014	START DATE	END DATE
11	Glades Utility Authority Belle Glade, FL 33430	James Andersen JLA Geosciences, Inc. Jupiter, Florida 33458 Ph: (561) 746-0228 Fax: (561) 746-0119 Email: jandersen@jlageosciences.co	Glades Utility Authority Production Well PBC LRWTP New Well PW-8, WA49 Lake Region WTP PBC 39700 Hooker Highway Belle Glade, FL 33430 **PW**	$500,000.00	100%	Jan-12	May-12
12	The City of Coral Springs 9551 West Sample Road Coral Springs, FL 33065		Constructing 3 24" replacement surficial aquifer production wells including, drilling, setting 24" PVC casing, cementing, geophysical logging, and well **PW**	$306,000.00	100%	Mar-10	Aug-10
13	Town of Jupiter 210 Military Trail Jupiter, FL 33458 Brad Wagner Ph: (561) 746-5134		New construction of site work, electrical and instrumentation for two surficial aquifer wells. This includes pumps, piping, electrical, and mechanical. Connecting control wiring which communicates with Data Flow Systems. **PW**	$589,000.00	100%	Jan-10	Jul-10
14	Miami Dade Water and Sewer Department 3575 South Lejune Road Miami, FL 33146 Bill Pitt, P.E. Ph: (786) 552-8171		Drill, construct and test one dual zone MW and four pad MW. MW to 1,900 ft. using various steel casings strings and a final 8" casing string of Certa-lok well casing. Includes mud and reverse air drilling, artesian flow, furnishing & installing wellhead and appurtenances . **MW**	$1,714,639.00	100%	Jun-09	Dec-09
15	Seacoast Utility Authority 4200 Hood Road Palm Beach Gardens, FL 33410 Bruce Gregg (561) 627-2900	JLA Geosciences, Inc. 1931 Commerce Lane, Suite 3 Jupiter , FL 33458 Jim Andersen (561) 746-0228	Drill, construct and test one floridan aquifer production well to 1,650 feet using 17.4" Certa-Lok. Grouting and geophysical logging **PW**	$700,000.00	100%	Jan-09	Jun-09
16	Miami Dade Water and Sewer Department 3575 South Lejune Road Miami, FL 33146 Bill Pitt, P.E. Ph: (786) 552-8171		Mechanical Integrity Testing of Deep Injection Wells and Associated Services. Clean and perform mechanical integrity testing of 21 Iws. Video and clean 20 Floridan Aquifer MWs **M&R**	$2,887,002.00	100%	Jul-08	May-09
17	Okeechobee Landfill, Inc. 10800 NE 12th Avenue Okeechobee, FL 34972 Tony Bishop, District Manager Ph: (863) 357-0824 Fax: (863) 357-0772	Jim McGrath L.S. Sims & Associates, Inc. 1530 US Highway 1 Rockledge, FL 32955 Ph: (321) 549-9405 Fax: (321) 504-4035 Email: jmcgrath@simsenv.com	IW1 Rehabilitation and Improvements Back-flush, chlorination, annular pressure re-rating and installation of density meter. **IW-M&R**	$131,100.00	100%	Oct-13	Oct-13

PROJECT ID NO.	CLIENT /ADDRESS/CONTACT	CONSULTANT	PROJECT TITLE AND DESCRIPTION (SEE KEY ABOVE)	APPROXIMATE VALUE	% COMPLETE AS OF 5/26/2014	START DATE	END DATE
18	Okeechobee Landfill, Inc. 10800 NE 12th Avenue Okeechobee, FL 34972 Tony Bishop, District Manager Seth Nunes, Account Manager Email: tbishop2@wm.com Email: snunes1@wm.com Ph: (863) 357-0824 Fax: (863) 357-0772	Jim McGrath L.S. Sims & Associates, Inc. 1530 US Highway 1 Rockledge, FL 32955 Ph: (321) 549-9405 Fax: (321) 504-4035 Email: jmcgrath@simsenv.com	OLI-2010 Drill, construct and test one injection well and monitoring well using various casing strings with surface facilities. Well Completion: Injection Well Cased to 2,700 feet/Open hole to 3,500 feet. Dual-Zone Monitoring Well: 1,200 feet/1,600 Feet **IW-MW**	$5,125,000.00	100%	Dec-07	Oct-08
19	Seacoast Utility Authority 4200 Hood Road Palm Beach Gardens, FL 33410 Bruce Gregg Ph: (561) 627-2900	JLA Geosciences, Inc. 1931 Commerce Lane, Suite 3 Jupiter , FL 33458 Jim Andersen (561) 746-0228	Drill nominal 36" borehole, furnish and install 30" steel casing, and drill 12" pilot hole. Well acidization - 7,000 gallons. **PW** **M&R**	$810,978.00	100%	Jul-06	Aug-07

Attachment

BIDDER'S QUALIFICATION QUESTIONNAIRE

Item 8. Specific Superintendents and Drillers

	Name	Years of Experience (With AWE)	# of Wells Drilled (With AWE)
Superintendents:	David Webb Sr.	36	Over 100
	David Webb Jr.	11	Over 50
Drillers:	Ken Pondler	6	12 Wells
	Samuel Mitchell	4	8 Wells
	David Robbers	3	6 Wells

Item 9. Information regarding the last similar project on which the drilling rig was utilized.

The Schramm TXD Hydraulic Top Drive drilling rig was used on the City of Cocoa Beach Project (See Project #6 in "Bidder References" for details)

The Challenger 360 Kelly Rotary drilling rig is currently being used on the Palm Beach County Water Utilities project (See Project #1 in "Bidder References" for details).

Schramm T300 Top drive Lake Worth 9R. (2014)

State of Florida
Department of State

I certify from the records of this office that ALL WEBBS ENTERPRISES, INC. is a corporation organized under the laws of the State of Florida, filed on August 11, 1983.

The document number of this corporation is G53896.

I further certify that said corporation has paid all fees due this office through December 31, 2014, that its most recent annual report/uniform business report was filed on February 28, 2014, and its status is active.

I further certify that said corporation has not filed Articles of Dissolution.

Given under my hand and the Great Seal of the State of Florida at Tallahassee, the Capital, this the Twenty-eighth day of February, 2014

Ken Detzner

Secretary of State

Authentication ID: CC0799882791

To authenticate this certificate,visit the following site,enter this ID, and then follow the instructions displayed.

https://efile.sunbiz.org/certauthver.html

Workers' Compensation Experience Rating Worksheet

Effective Date: **1/1/2015**
Risk ID:
State: **FL**

1	2	3	4	5	6	7	8	9	10	11
CODE	ELR	D - RATIO	PAYROLL	EXPECTED LOSSES	EXP. PRIM. LOSSES	CLAIMDATA # ID	IJ	OF	ACT. INC. LOSSES	ACT. PRIM. LOSSES
*****Florida										
Policy Period: 1/1/2011 to 1/1/2012					Policy #:					
5183	1.99	0.34	303,825	6,046	2,056					
5606	0.63	0.30	116,515	734	220					
6204	4.96	0.30	92,593	4,593	1,378					
7380	2.38	0.37	30,031	715	264					
8227	2.22	0.28	235,327	5,224	1,463					
8742	0.18	0.34	171,685	309	105					
8810	0.10	0.40	104,971	105	42					
Policy Period Totals			1,054,947	17,726	5,528					
Policy Period: 1/1/2012 to 1/1/2013					Policy #:					
3365	5.02	0.34	8,491	426	145					
5183	1.99	0.34	319,357	6,355	2,161					
5606	0.63	0.30	10,820	68	20					
6204	4.96	0.30	92,649	4,595	1,379					
7380	2.38	0.37	17,701	421	156					
8227	2.22	0.28	165,197	3,667	1,027					
8742	0.18	0.34	148,788	268	91					
8810	0.10	0.40	152,593	153	61					
Policy Period Totals			915,596	15,954	5,040					
Policy Period: 1/1/2013 to 1/1/2014					Policy #:					
3365	5.02	0.34	15,459	776	264	Sm. loss		F	2,826	2,826
5183	1.99	0.34	231,620	4,609	1,567					
5606	0.63	0.30	66,589	420	126					
6204	4.96	0.30	112,919	5,601	1,680					
6217	2.47	0.30	944	23	7					
7380	2.38	0.37	3,336	79	29					
8227	2.22	0.28	162,538	3,608	1,010					
8742	0.18	0.34	157,577	284	96					
8810	0.10	0.40	124,346	124	50					
Policy Period Totals			875,329	15,525	4,830				2,826	2,826

Proprietary and Confidential. ModMaster software provides for an ESTIMATE of an experience modification factor. Your official experience modification factor is issued solely by the applicable workers' compensation rating bureau. © 2014 Zywave, Inc. All Rights Reserved.

Mod Analysis for ALLWEBB

0.10		(D) - (E)			(H) - (I)			
"W" VALUE		33,804	49,203	15,399	0	24,900	2,826	2,826
		EXPECTED EXCESS	TOTAL EXPECTED	TOTAL EXP. PRIM.	ACTUAL EXCESS	"B" VALUE	TOTAL ACTUAL	TOTAL ACT. PRIM.
A	B	C	D	E	F	G	H	I

Limited loss.
s Subrogation or other special loss.

16
ARAP
1.00
if applicable

Experience Modification Calculation	11	12	13	14	15
	PRIMARY LOSSES	STABILIZING VALUE	RATABLE EXCESS	ADJUSTED TOTALS	EXP MOD
ACTUAL	(I)	(C) X (1 - A) + (G)	(A) X (F)		(J) / (K)
	2,826	55,324	0	58,150	0.78
EXPECTED	(E)	(C) X (1 - A) + (G)	(A) X (C)		
	15,399	55,324	3,380	74,103	

* Rating reflects a decrease of 70 percent medical-only primary and excess loss dollars where ERA is applied, reflected only in totals (F), (H), and (I).

The ARAP surcharge shown is for those states in the rating that have approved the ARAP program. It was calculated based on the general interstate formula and maximum, however, the maximum surcharge may vary by state.

This mod has been adjusted in accordance with experience rating plan rules. The unadjusted mod is: 0.7847. The FL ARAP may apply and may differ from the general interstate ARAP due to FL limitations on expected losses. The FL ARAP is: 1.00

Proprietary and Confidential. ModMaster software provides for an ESTIMATE of an experience modification factor. Your official experience modification factor is issued solely by the applicable workers' compensation rating bureau. © 2014 Zywave, Inc. All Rights Reserved.

BIDDER REFERENCES

ALL WEBBS

Key
IW - Injection Well
MW - Monitoring Well
PW - Floridan Production Well
ASR - Aquifer Storage & Recovery
IND - Industrial Well
M&R - Maintenance and Rehabilitation

References provided below are for projects awarded to and implemented by All Webbs Enterprises, Inc.

PROJECT ID NO.	CLIENT /ADDRESS/CONTACT	CONSULTANT	PROJECT TITLE AND DESCRIPTION (SEE KEY ABOVE)	APPROXIMATE VALUE	% COMPLETE AS OF 5/26/2014	START DATE	END DATE
1	Palm Beach County 8100 Forest Hill Boulevard West Palm Beach, FL 33413 Joseph Tanacredi, P.E. Ph: (561) 493-6088 Fax: (561) 493-6085	James Andersen JLA Geosciences, Inc. Jupiter, Florida 33458 Ph: (561) 746-0228 Fax: (561) 746-0119 Email: jandersen@jlageosciences.com	Water Treatment Plant No. 11 Wells 9 & 10 Maintenance and Rehabilitation of 7 Wells Installation and Testing of 2 Production Wells **M&R, PW**	2,576,190.00	40%	Mar-14	Ongoing
2	City of Wellington 1100 Wellington Trace Wellington, FL 33414 Ms. Karla Berroteran Utilities Supervisor Ph: (561) 753-2465 Fax: (561) 904-5936 Email: kberroteran@wellingtonfl.gov	N/A	Well Inspections, Rehabilitation, and Drop Pipe Modifications on Well R1, R2, R3 and R4. Including Video logging and brushing, as necessary. **M&R**	$81,884.00	80%	Jun-13	Ongoing
3	City of Lake Worth City Hall, 2nd Floor 7 North Dixie Highway Lake Worth, FL 33460 (561) 586-1674	Mock, Roos & Associates, Inc. Engineers-Surveyors-Planners 5720 Corporate Way West Palm Beach, FL	Rehabilitation of Well 9R. Includedwell head and pump removal, inspection, video-logging, brushing acidization pump reinstallation and wellhead replacement. **M&R**	$169,304.00	90%	Feb-14	Ongoing
4	The City of Coral Springs 9551 West Sample Road Coral Springs, FL 33065 Ph: Fax:	Eckler Engineering	Rehabilitation of Wells #4 and #11. Included wellhead and pump removal, inspection, video-logging, brushing, acidization, pump reinstallation and wellhead replacement. **M&R**	$133,300.00	90%	Feb-14	Ongoing

THE AMERICAN INSTITUTE OF ARCHITECTS

AIA Document A310

Bid Bond

KNOW ALL MEN BY THESE PRESENTS, that we All Webbs Enterprises, Inc.
(Here insert full name and address or legal title of Contractor)
309 Commerce Way, Jupiter, Florida 33458
as Principal, hereinafter called the Principal, and Berkley Insurance Company
(Here insert full name and address or legal title of Surety)
412 Mount Kemble Ave., Suite 310N, Morristown, New Jersey 07960
a corporation duly organized under the laws of the State of Delaware
as Surety, hereinafter called the Surety, are held and firmly bound unto City of Lake Worth
(Here insert full name and address or legal title of Owner)
Procurement Office, City Hall, Lake Worth, Florida
as Obligee, hereinafter called the Obligee, in the sum of Five Per Cent of Bid Amount
Dollars ($ 5% of Bid),
for the payment of which sum well and truly to be made, the said Principal and the said Surety, bind ourselves, our heirs, executors, administrators, successors and assigns, jointly and severally, firmly by these presents.

WHEREAS, the Principal has submitted a bid for
(Here insert full name, address and description of project)

Potable Well No. 12 Reconstruction, IFB# 15-101

NOW, THEREFORE, if the Obligee shall accept the bid of the Principal and the Principal shall enter into a Contract with the Obligee in accordance with the terms of such bid, and give such bond or bonds as may be specified in the bidding or Contract Documents with good and sufficient surety for the faithful performance of such Contract and for the prompt payment of labor and material furnished in the prosecution thereof, or in the event of the failure of the Principal to enter such Contract and give such bond or bonds, if the Principal shall pay to the Obligee the difference not to exceed the penalty hereof between the amount specified in said bid and such larger amount for which the Obligee may in good faith contract with another party to perform the Work covered by said bid, then this obligation shall be null and void, otherwise to remain in full force and effect.

Signed and sealed this 18th day of December 19xx 2014.

Kla. Thomson
(Witness)

All Webbs Enterprises, Inc.
(Principal) (Seal)
(Title)

Joan H. Belvout
(Witness)

Berkley Insurance Company
(Surety) (Seal)
(Title)
Joseph D. Johnson, Jr., Attorney-in-Fact
Florida Resident Agent

No. BI-10099a

POWER OF ATTORNEY
BERKLEY INSURANCE COMPANY
WILMINGTON, DELAWARE

NOTICE: The warning found elsewhere in this Power of Attorney affects the validity thereof. Please review carefully.

KNOW ALL MEN BY THESE PRESENTS, that BERKLEY INSURANCE COMPANY (the "Company"), a corporation duly organized and existing under the laws of the State of Delaware, having its principal office in Greenwich, CT, has made, constituted and appointed, and does by these presents make, constitute and appoint: ***Joseph D. Johnson, Jr.; Brett A. Ragland; Francis T. O'Reardon; Joseph D. Johnson, III; JoAnn H. Bebout; Diedre A. Sullivan or John Scott Harris of Joseph D. Johnson & Company of Orlando, FL*** its true and lawful Attorney-in-Fact, to sign its name as surety only as delineated below and to execute, seal, acknowledge and deliver any and all bonds and undertakings, with the exception of Financial Guaranty Insurance, providing that no single obligation shall exceed **Fifty Million and 00/100 U.S. Dollars (U.S.$50,000,000.00),** to the same extent as if such bonds had been duly executed and acknowledged by the regularly elected officers of the Company at its principal office in their own proper persons.

This Power of Attorney shall be construed and enforced in accordance with, and governed by, the laws of the State of Delaware, without giving effect to the principles of conflicts of laws thereof. This Power of Attorney is granted pursuant to the following resolutions which were duly and validly adopted at a meeting of the Board of Directors of the Company held on January 25, 2010:

RESOLVED, that, with respect to the Surety business written by Berkley Surety Group, the Chairman of the Board, Chief Executive Officer, President or any Vice President of the Company, in conjunction with the Secretary or any Assistant Secretary are hereby authorized to execute powers of attorney authorizing and qualifying the attorney-in-fact named therein to execute bonds, undertakings, recognizances, or other suretyship obligations on behalf of the Company, and to affix the corporate seal of the Company to powers of attorney executed pursuant hereto; and said officers may remove any such attorney-in-fact and revoke any power of attorney previously granted; and further

RESOLVED, that such power of attorney limits the acts of those named therein to the bonds, undertakings, recognizances, or other suretyship obligations specifically named therein, and they have no authority to bind the Company except in the manner and to the extent therein stated; and further

RESOLVED, that such power of attorney revokes all previous powers issued on behalf of the attorney-in-fact named; and further

RESOLVED, that the signature of any authorized officer and the seal of the Company may be affixed by facsimile to any power of attorney or certification thereof authorizing the execution and delivery of any bond, undertaking, recognizance, or other suretyship obligation of the Company; and such signature and seal when so used shall have the same force and effect as though manually affixed. The Company may continue to use for the purposes herein stated the facsimile signature of any person or persons who shall have been such officer or officers of the Company, notwithstanding the fact that they may have ceased to be such at the time when such instruments shall be issued.

IN WITNESS WHEREOF, the Company has caused these presents to be signed and attested by its appropriate officers and its corporate seal hereunto affixed this 14 day of January, 2014.

Attest: Berkley Insurance Company

(Seal) By _____ By _____

Ira S. Lederman
Senior Vice President & Secretary

Jeffrey M. Hafter
Senior Vice President

WARNING: THIS POWER INVALID IF NOT PRINTED ON BLUE "BERKLEY" SECURITY PAPER.

STATE OF CONNECTICUT)
) ss:
COUNTY OF FAIRFIELD)

Sworn to before me, a Notary Public in the State of Connecticut, this 14 day of January, 2014, by Ira S. Lederman and Jeffrey M. Hafter who are sworn to me to be the Senior Vice President and Secretary, and the Senior Vice President, respectively, of Berkley Insurance Company.

Notary Public, State of Connecticut

KATHLEEN COREY
NOTARY PUBLIC
CONNECTICUT
MY COMMISSION EXPIRES OCTOBER 31, 2017

CERTIFICATE

I, the undersigned, Assistant Secretary of BERKLEY INSURANCE COMPANY, DO HEREBY CERTIFY that the foregoing is a true, correct and complete copy of the original Power of Attorney; that said Power of Attorney has not been revoked or rescinded and that the authority of the Attorney-in-Fact set forth therein, who executed the bond or undertaking to which this Power of Attorney is attached, is in full force and effect as of this date.

Given under my hand and seal of the Company, this 18th day of December, 2014.

(Seal)

Andrew M. Tuma

WARNING – Any unauthorized reproduction or alteration of this document is prohibited. This power of attorney is void unless seals are readable and the certification seal at the bottom is embossed. The background imprint, warning and confirmation (on reverse) must be in blue ink.

Bid Tab: Potable Well No. 12 Reconstruction
for City of Lake Worth

Bid Date: 12/18/14

Item No.	Item Description	Quantity	Unit	All Webbs Enterprises Unit	All Webbs Enterprises Price	All Webbs Enterprises Total Amount	Southeast Drilling Services Unit	Southeast Drilling Services Price	Southeast Drilling Services Total Amount	Florida Design Drilling Corp. Unit	Florida Design Drilling Corp. Price	Florida Design Drilling Corp. Total Amount	A.C. Schultes of Florida, Inc. Unit	A.C. Schultes of Florida, Inc. Price	A.C. Schultes of Florida, Inc. Total Amount
	Schedule A - General Requirements														
A-1	Bonds and Insurance	1	LS			$10,000.00			$8,000.00			$20,000.00			$6,000.00
A-2.	Mobilization/Demobilization/General Conditions	1	LS			10,000.00			20,000.00			15,000.00			40,200.00
A-3.	Permit Fees	1	LS			2,000.00			9,000.00			1,000.00			12,000.00
A-4.	Video Taping	1	LS			1,000.00			2,000.00			1,474.00			5,000.00
A-5.	Prepare and Furnish Record Drawings	1	LS			5,000.00			1,500.00			3,000.00			10,000.00
A-6.	General Allowance	1	LS			20,000.00			20,000.00			20,000.00			20,000.00
	Total Schedule A					**$48,000.00**			**$60,500.00**			**$60,474.00**			**$93,200.00**
	Schedule B - Well Reconstruction														
B-1.	Remove wellhead, column pipe, and well pump	1	LS			$12,000.00			$4,000.00			$42,000.00			$22,000.00
B-2.	Remove existing riser casing and well screen	1	LS			8,000.00			25,000.00			10,000.00			49,100.00
B-3.	Clean out borehole of existing well screen (total depth approx 150 ft) to a nominal 19-in diameter	70	FT		$150.00	10,500.00		$150.00	10,500.00		$150.00	10,500.00		$150.00	10,500.00
B-4.	Drill nominal 8" diameter pilot hole from base of existing well (total depth approx 150 ft) to 250 ft	100	FT		100.00	10,000.00		120.00	12,000.00		150.00	15,000.00		125.00	12,500.00
B-5.	Geophysical Logging (Complete)	1	LS			5,000.00			4,000.00			5,000.00			3,000.00
B-6.	Ream 8-inch diameter pilot hole to nominal 19-inch diameter borehole	100	FT		100.00	10,000.00		120.00	12,000.00		150.00	15,000.00		150.00	15,000.00
B-7.	Furnish and install 12-inch diameter stainless steel well screen from 200 feet to 250 feet	50	FT		300.00	15,000.00		220.00	11,000.00		150.00	7,500.00		300.00	15,000.00
B-8.	Furnish and install 12-inch diameter SDR17 PVC riser casing to 200 feet	200	FT		15.00	3,000.00		65.00	13,000.00		150.00	30,000.00		50.00	10,000.00
B-9.	Furnish and install gravel pack	300	CF		20.00	6,000.00		20.00	6,000.00		25.00	7,500.00		50.00	15,000.00
B-10.	Airlift Development	20	HR		200.00	4,000.00		250.00	5,000.00		150.00	3,000.00		150.00	3,000.00
B-11.	Jetting with simultaneous Airlift Development	80	HR		200.00	16,000.00		250.00	20,000.00		150.00	12,000.00		150.00	12,000.00
B-12.	Pump Development	40	HR		200.00	8,000.00		250.00	10,000.00		150.00	6,000.00		150.00	6,000.00
B-13.	Conduct Step Rate Test	8	HR		200.00	1,600.00		400.00	3,200.00		150.00	1,200.00		150.00	1,200.00
B-14.	Conduct Pre- and Post-Construction Video Logging	2	EA		2,500.00	5,000.00		1,500.00	3,000.00		5,000.00	10,000.00		1,800.00	3,600.00
B-15.	Furnish and install 6" Certa-Loc column pipe and appurtenances	100	FT		50.00	5,000.00		50.00	5,000.00		60.00	6,000.00		25.00	2,500.00
B-16.	Furnish and Install Well Pump	1	LS			35,000.00			35,000.00			30,000.00			38,000.00

Bid Tab: Potable Well No. 12 Reconstruction
for City of Lake Worth

Bid Date: 12/18/14

				All Webbs Enterprises			Southeast Drilling Services			Florida Design Drilling Corp.			A.C. Schultes of Florida, Inc.		
Item No.	**Item Description**	**Quantity**	**Unit**	**Unit**	**Price**	**Total Amount**	**Unit**	**Price**	**Total Amount**	**Unit**	**Price**	**Total Amount**	**Unit**	**Price**	**Total Amount**
B-17.	Wellhead piping modifications	1	LS			20,000.00			20,000.00			15,000.00			11,500.00
B-18.	Disinfection and Water Quality Sampling	1	LS			5,000.00			5,000.00			3,000.00			6,500.00
B-19.	Painting and miscellaneous	1	LS			4,000.00			2,500.00			2,000.00			5,000.00
B-20.	Extra work by drilling crew & drilling equipment	8	HR		200.00	1,600.00		250.00	2,000.00		10.00	80.00		150.00	1,200.00
B-21.	Extra work by drilling crew	8	HR		150.00	1,200.00		250.00	2,000.00		10.00	80.00		100.00	800.00
B-22.	Standby time with rig and drilling crew on-site	8	HR		200.00	1,600.00		250.00	2,000.00		10.00	80.00		80.00	640.00
B-23.	Standby time with rig on-site and crew off-site	8	HR		150.00	1,200.00		250.00	2,000.00		10.00	80.00		50.00	400.00
B-24	Formation Water Disposal System	1	LS			10,000.00			2,500.00			10,000.00			8,000.00
B-25.	Fence and Site Restoration	1	LS			10,800.00			8,500.00			10,000.00			11,420.00
	Total Schedule B					**$209,500.00**			**$225,200.00**			**$251,020.00**			**$263,860.00**
	Schedule C - Electrical and Instrumentation														
C-1.	Flowmeter	1	LS			$5,940.00			$5,000.00			$7,000.00			$5,400.00
C-2.	Instrumentation	1	LS			22,600.00			20,000.00			6,000.00			4,600.00
C-3.	Misc. electrical wire, conduit, and boxes	1	LS			5,625.00			6,500.00			25,000.00			35,600.00
	Total Schedule C					**$34,165.00**			**$31,500.00**			**$38,000.00**			**$45,600.00**
	Total Bid - Schedules A through C					**$291,665.00**			**$317,200.00**			**$349,494.00**			**$402,660.00**

MOCK • ROOS
ENGINEERS • SURVEYORS • PLANNERS

January 8, 2015
Revised February 6, 2015

Mr. Larry Johnson, P.E.
Lake Worth Utilities
301 College Street
Lake Worth, FL 33460

Ref. No.: B4015.00
Subject: Lake Worth – Potable Well No. 12 Reconstruction

Dear Larry:

On December 18, 2014 bids were received for the construction work on this project. The bids ranged from $291,665.00 to $402,660.00. Enclosed is a bid tabulation summary for your use in reviewing and comparing the bids. The low bid was received from All Webb Enterprises, Inc. in the amount of $291,665.00. The low bid was below the Engineer's Opinion of Probable Construction Cost.

All Webb Enterprises, Inc. has completed a number of past well drilling projects for the City where Mock•Roos was the Engineer. These past projects were completed in a successful manner and the Contractor was a reasonable organization to work with. Based on this past project performance, we did not check additional references. We have discussed the bid with the Contractor and the Contractor has indicated that his bid is complete and he can complete the project for the bid amount. Based on the above discussion, we recommend award of this Contractor to All Webb Enterprises, Inc.

Our Recommendation of Award is based on a review of the project and the contractor from an engineering perspective and based on past project performance. We recommend that you seek advice of legal counsel relative to other issues regarding the legalities of award of this contract.

We recommend that you establish the following budgets for anticipated expenses under this Project.

Construction Contract		$291,665.00
Construction Phase Services:		
Engineering Services Mock•Roos	$19,755.00	
Hydrogeologic Services	$16,045.00	
Electrical Subconsultant	$3,500.00	
Total Construction Phase Services		$39,300.00
Total Construction Phase Budget		$330,955.00

I:\lwu_\lwu_w12r\b4015.00\bid recommendation-jljh.docx

Mock, Roos & Associates, Inc.
5720 Corporate Way, West Palm Beach, Florida 33407-2066, (561) 683-3113, fax 478-7248

In addition to the bid tabulation, enclosed is a copy of the All Webb Enterprises, Inc. bid submittal. If you have any questions or comments regarding the recommendations or the project, please contact me at 683-3113, extension 258.

I would be happy to meet with you to discuss the bids and the project further.

Sincerely,

MOCK, ROOS & ASSOCIATES, INC.

John R. Leemon, P.E.
Senior Project Manager

JRL:jeh
Enclosure
Copies: Hirut Darge
Tim Sloan

PROJECT MANUAL

Potable Well No. 12 Reconstruction
for City of Lake Worth, FL
Lake Worth Solicitation No. IFB-15-101

October 2014

Prepared by:

Mock, Roos & Associates, Inc.
Engineers-Surveyors-Planners
5720 Corporate Way
West Palm Beach, Florida

Engineer's Project
No. B 4015.00

PROJECT: Potable Well No. 12 Reconstruction
for City of Lake Worth, FL
Lake Worth Solicitation No. IFB-15-101

TABLE OF CONTENTS

		NO. OF PAGES
DIVISION 0 - BIDDING AND CONTRACT REQUIREMENTS		
00020	INVITATION TO BID	1
00100	INSTRUCTIONS TO BIDDERS	6
00300	BID FORM	12
00310	BIDDERS QUALIFICATION QUESTIONNAIRE	4
00500	AGREEMENT	5
00501	OPINION OF ATTORNEY	1
00610	CONSTRUCTION PERFORMANCE BOND	2
00620	CONSTRUCTION PAYMENT BOND	2
00630	NOTICE OF COMPLIANCE WITH CHAPTER 556, FLORIDA STATUTES	1
00670	CONTRACTOR'S AFFIDAVIT TO OWNER	1
00680	APPLICATION FOR PAYMENT	1
00681	SCHEDULE OF VALUES AND WORK COMPLETED	1
00700	GENERAL CONDITIONS	33
00800	SUPPLEMENTARY CONDITIONS	10
00820	SPECIAL CONDITIONS	3
00840	LISTING OF DUTIES, RESPONSIBILITIES AND LIMITATIONS OF AUTHORITY OF RESIDENT PROJECT REPRESENTATIVE	4
00860	LIST OF DRAWINGS	1
00900	ADDENDA (ADDED THIS LOCATION IN PROJECT MANUAL - IF ANY)	
SPECIFICATIONS TABLE OF CONTENTS		1
DIVISION 1 - GENERAL REQUIREMENTS		5
TECHNICAL SECTIONS OF SPECIFICATIONS		77
APPENDICES		
APPENDIX A – FIGURE 1 – POTABLE WELL NO. 12 DEEPENING		1

PROJECT: Potable Well No. 12 Reconstruction
for City of Lake Worth, FL
Lake Worth Solicitation No. IFB-15-101

Date: November 13, 2014

00020
INVITATION TO BID

Sealed bids, in duplicate, will be received by City of Lake Worth Procurement Office, City Hall, 2nd Floor, 7 North Dixie Highway, Lake Worth, Florida 33460 for the subject Project until 2:00 p.m. local time, December 18, 2014, then opened publicly at that time.

The OWNER for the Project is City of Lake Worth, Florida.

The Contract Documents will be open to inspection at Mock, Roos & Associates, Inc., 5720 Corporate Way, West Palm Beach, Florida 33407. The project includes drilling the well to deeper depth and reconstruction of the well.

Contract Documents may be purchased from Mock, Roos & Associates, Inc. at the following prices, which are non-refundable:

Drawings:	$ 9.43	plus $0.57	sales tax	=	$10.00
Project Manual:	$23.58	plus $1.42	sales tax	=	$25.00
Complete Set (Drawings and Project Manual):			$35.00		

Packaging & Mailing Charges/Set: $ 15.00 (when delivered by UPS)

This Contract is a unit price contract.

Bids must be accompanied by a Bid Security in the form of a certified or bank check made payable to the Owner, or a Bid Bond. The amount of the security shall not be less than five (5) percent of the Bidder's total price indicated in Bid Form.

No Bid may be withdrawn for a period of 120 days after the scheduled closing date for the receipt of bids except as otherwise provided in Article 13 of the Instructions to Bidders.

The successful Bidder, who is awarded the Contract, shall be required to furnish a 100% Construction Performance Bond and a 100% Construction Payment Bond.

The OWNER reserves the right to reject any or all Bids, to waive informalities, and to re-advertise.

/s/ Larry Johnson, Water Utilities Director

Publish: Palm Beach Post - November 16, 2014

00100
INSTRUCTIONS TO BIDDERS

1. DEFINED TERMS.

Terms used in these Instructions to Bidders which are defined in the Standard General Conditions of the Construction Contract (EDCJC No. 1910-8, 1983 Edition) have the meanings assigned to them in the General Conditions. The term "Bidder" means one who submits a Bid directly to Owner, as distinct from a sub-bidder, who submits a bid to a Bidder. The term "Successful Bidder" means the lowest, qualified, responsible and responsive Bidder to whom Owner (on the basis of Owner's evaluation as hereinafter provided) makes an award. The term "Bidding Documents" includes the Advertisement or Invitation to Bid, Instructions to Bidders, the Bid Form, and the proposed Contract Documents (including all Addenda issued prior to receipt of Bids).

2. COPIES OF BIDDING DOCUMENTS.

2.1. Complete sets of the Bidding Documents in the number and for the cost, if any, stated in the Advertisement or Invitation to Bid may be obtained from Engineer (unless another issuing office is designated in the Advertisement or Invitation to Bid).

2.2. Complete sets of Bidding Documents must be used in preparing Bids; neither Owner nor Engineer assume any responsibility for errors or misinterpretations resulting from the use of incomplete sets of Bidding Documents.

2.3. Owner and Engineer in making copies of Bidding Documents available on the above terms do so only for the purpose of obtaining Bids on the Work and do not confer a license or grant for any other use.

3. QUALIFICATIONS OF BIDDERS.

To demonstrate qualifications to perform the Work, each Bidder must be prepared to submit within five days of Owner's request, written evidence such as financial data, previous experience, present commitments and other such data as may be reasonably specifically requested by Owner or otherwise required in Contract Documents. Each Bid must contain evidence of Bidder's qualification to do business in the state where the Project is located or covenant to obtain such qualification prior to award of the contract.

4. EXAMINATION OF CONTRACT DOCUMENTS AND SITE.

4.1. It is the responsibility of each Bidder before submitting a Bid, to (a) examine the Contract Documents thoroughly, (b) visit the site to become familiar with local conditions that may affect cost, progress, performance or furnishing of the Work, (c) consider federal, state and local Laws and Regulations that may affect cost, progress, performance or furnishing of the Work, (d) study and carefully correlate Bidder's observations with the Contract Documents, and (e) notify Engineer of all conflicts, errors or discrepancies in the Contract Documents.

4.2. Reference is made to Division 1: General Requirements of the Specifications for the identification of:

4.2.1. those reports of explorations and tests of subsurface conditions at the site which have been utilized by Engineer in preparation of the Contract Documents.

4.2.2. those drawings of physical conditions in or relating to existing surface and subsurface conditions (except Underground Facilities) which are at or contiguous to the site which have been utilized by Engineer in preparation of the Contract Documents.

4.2.3. Copies of such reports and drawings (referred to above), if not attached to the Specifications or added on the Drawings, will be made available by Owner to any Bidder on request. Those reports and drawings are not a part of the Contract Documents. Bidder may not rely upon the accuracy of the non-technical data, interpretations or opinions contained in those reports and drawings. Bidder may

not rely on the completeness of those reports and drawings for the purposes of bidding or construction. Bidder may rely on any technical data contained in those reports and drawings specifically referenced in Division 1: General Requirements as technical data that can be relied on.

4.3. Information and data reflected in the Contract Documents with respect to Underground Facilities at or contiguous to the site is based upon information and data furnished to Owner and Engineer by owners of such Underground Facilities or others, and Owner does not assume responsibility for the accuracy or completeness thereof unless it is expressly provided otherwise in the Supplementary Conditions.

4.4. Provisions concerning responsibilities for the adequacy of data furnished to prospective Bidders on subsurface conditions, Underground Facilities and other physical conditions, and possible changes in Contract Documents due to differing conditions appear in Paragraphs 4.2 and 4.3 of the General Conditions.

4.5. Before submitting a Bid, each Bidder will, at Bidder's own expense, be responsible to make or obtain such examinations, investigations, explorations, tests and studies and obtain any additional information and data which pertain to the physical conditions (surface, subsurface and Underground Facilities) at or contiguous to the site or otherwise which may affect cost, progress, performance or furnishing of the Work and which Bidder deems necessary to determine its Bid for performing and furnishing the Work in accordance with the time, price and other terms and conditions of the Contract Documents.

4.6. On request in advance, Owner will provide each Bidder access to the site to conduct such explorations and tests as each Bidder deems necessary for submission of a Bid. Bidder shall fill all holes, clean up and restore the site to its former condition upon completion of such explorations.

4.7. The lands upon which the Work is to be performed, rights-of-way and easements for access thereto and other lands designated for use by Contractor in performing the Work are identified in the Contract Documents. All additional lands and access thereto required for temporary construction facilities or storage of materials and equipment are to be provided by Contractor. Easements for permanent structures or permanent changes in existing structures are to be obtained and paid for by Owner unless otherwise provided in the Contract Documents.

4.8. The submission of a Bid will constitute an incontrovertible representation by Bidder that Bidder has complied with every requirement of this Article 4, that without exception the Bid is premised upon performing and furnishing the Work required by the Contract Documents and such means, methods, techniques, sequences or procedures of construction as may be indicated in or required by the Contract Documents, and that the Contract Documents are sufficient in scope and detail to indicate and convey understanding of all terms and conditions for performance and furnishing of the Work.

5. INTERPRETATIONS AND ADDENDA.

5.1. All questions about the meaning or intent of the Contract Documents are to be directed to Engineer (unless another issuing office is designated in the Advertisement or Invitation to Bid). Interpretations or clarifications considered necessary by Engineer in response to such questions will be issued by Addenda mailed or delivered to all parties recorded by issuing office as having received the Bidding Documents. Questions received less than five days prior to the date for opening of Bids may not be answered. Only questions answered by formal written Addenda will be binding. Oral and other interpretations or clarifications will be without legal effect.

5.2. Addenda may also be issued to modify the Bidding Documents as deemed advisable by Owner or Engineer.

6. BID SECURITY.

6.1. Each Bid must be accompanied by Bid security made payable to Owner in an amount of five percent of the Bidder's maximum Bid price and in the form of a certified or bank check or a Bid Bond issued by a surety meeting the requirements of Paragraph 5.1 of the General Conditions.

6.2. The Bid security of the Successful Bidder will be retained until such Bidder has executed the Agreement and furnished the required contract security, whereupon the Bid security will be returned. If the Successful Bidder fails to execute and deliver the Agreement and furnish the required contract security within fifteen days after the Notice of Award, Owner may annul the Notice of Award and the Bid security of the Bidder will be forfeited. The Bid security of other Bidders whom Owner believes to have a reasonable chance of receiving the award may be retained by Owner until the earlier of the seventh day after the Effective Date of the Agreement or the ___120th___ day after the Bid opening, whereupon Bid security furnished by such Bidders will be returned. Bid security with Bids which are not competitive will be returned within seven days after the Bid opening.

7. CONTRACT TIME.

The numbers of days within which, or the dates by which, the Work is to be substantially completed and also completed and ready for final payment (the Contract Time) are set forth in the Bid Form and the Agreement. If Contract Times are left blank in the Bid Form, the time for Substantial Completion and final completion are to be set forth by Bidder in the Bid and will be included in the Agreement. The times will be taken into consideration by Owner during the evaluation of Bids, and it will be necessary for the Successful Bidder to satisfy Owner of Bidder's ability to achieve Substantial Completion and final completion within the times designated in the Bid.

8. LIQUIDATED DAMAGES.

Provisions for liquidated damages, if any, are set forth in the Agreement.

9. SUBSTITUTE OR "OR-EQUAL" ITEMS.

The contract, if awarded, will be on the basis of materials and equipment described in the Drawings or specified in the Specifications without consideration of possible substitute or "or-equal" items. Whenever it is indicated in the Drawings or specified in the Specifications that a substitute or "or-equal" item of material or equipment may be furnished or used by Contractor if acceptable to Engineer, application for such acceptance will not be considered by Engineer until after the Effective Date of the Agreement. The procedure for submission of any such application by Contractor and consideration by Engineer is set forth in Paragraphs 6.7.1, 6.7.2 and 6.7.3 of the General Conditions and may be supplemented in Division 1: General Requirements.

10. SUBCONTRACTORS, SUPPLIERS AND OTHERS.

10.1. If the Bid Form or Specifications require (or if Owner requests after Bids are received) the identity of certain Subcontractors, Suppliers and other persons and organizations (including those who are to furnish the principal items of material and equipment) to be submitted to Owner in advance of the specified date prior to the Effective Date of the Agreement, the apparent Successful Bidder, and any other Bidder so requested, shall within seven days after the Bid opening (or seven days after request by Owner) submit to Owner a list of all such Subcontractors, Suppliers and other persons and organizations proposed for those portions of the Work for which such identification is required. Such list shall be accompanied by an experience statement with pertinent information regarding similar projects and other evidence of qualification for each such Subcontractor, Supplier, person or organization if requested by Owner. Subcontractors shall be required to meet Contractor's liability insurance requirements as established by the General and Supplementary Conditions or be listed as an additional insured on the apparent successful Bidder's policy. If Owner or Engineer after due investigation has reasonable objection to any proposed Subcontractor, Supplier, other person or organization, either may before the Notice of Award is given request the apparent Successful Bidder to submit an acceptable substitute without an increase in Bid price. If apparent Successful Bidder declines to make any such substitution, Owner may award the contract to the next lowest Bidder that proposes to use acceptable Subcontractors, Suppliers and other

persons and organizations. The declining to make requested substitutions will not constitute grounds for sacrificing the Bid security of any Bidder. Any Subcontractor, Supplier, other person or organization listed and to whom Owner or Engineer does not make written objection prior to the giving of the Notice of Award will be deemed acceptable to Owner and Engineer subject to revocation of such acceptance after the Effective Date of the Agreement as provided in Paragraph 6.8.2 of the General Conditions.

10.2. No Contractor shall be required to employ any Subcontractor, Supplier, other person or organization against whom Contractor has reasonable objection.

11. BID FORM.

11.1. The Bid Form is included with the Bidding Documents; additional copies may be obtained from Engineer (or the issuing office).

11.2. All blanks on the Bid Form must be completed in ink or by typewriter.

11.3. Bids by corporations must be executed in the corporate name by the president or a vice-president (or other corporate officer accompanied by evidence of authority to sign) and the corporate seal must be affixed and attested by the secretary or an assistant secretary. The corporate address and state of incorporation must be shown below the signature.

11.4. Bids by partnerships must be executed in the partnership name and signed by a general partner, whose title must appear under the signature and the official address of the partnership must be shown below the signature.

11.5. All names must be typed or printed below the signature.

11.6. The Bid shall contain an acknowledgement of receipt of all Addenda (the numbers of which must be filled in on the Bid Form). All Addenda are a part of the Bid documents and each Bidder will be bound by such Addenda, whether or not received by the Bidder. It is the responsibility of each Bidder to verify that he or she has received all Addenda issued before Bids are opened.

11.7. The address and telephone number for communications regarding the Bid must be shown.

12. SUBMISSION OF BIDS.

Bids shall be submitted at the time and place indicated in the Advertisement or Invitation to Bid and shall be enclosed in an opaque sealed envelope, marked with the Project title (and, if applicable, the designated portion of the Project for which the Bid is submitted) and name and address of the Bidder and accompanied by the Bid security and other required documents. If the Bid is sent through the mail or other delivery system the sealed envelope shall be enclosed in a separate envelope with the notation "BID ENCLOSED FOR (insert project name) TO BE OPENED (insert date and time as indicated in the Invitation to Bid or subsequent addenda) " on the face of it.

13. MODIFICATION AND WITHDRAWAL OF BIDS.

13.1. Bids may be modified or withdrawn by an appropriate document duly executed (in the manner that a Bid must be executed) and delivered to the place where Bids are to be submitted at any time prior to the opening of Bids.

13.2. If, within twenty-four hours after Bids are opened, any Bidder files a duly signed, written notice with Owner and promptly thereafter demonstrates to the reasonable satisfaction of Owner that there was a material and substantial mistake in the preparation of its Bid, that Bidder may withdraw its Bid and the Bid security will be returned. Thereafter, that Bidder will be disqualified from further bidding on the Work to be provided under the Contract Documents.

14. OPENING OF BIDS.

Bids will be opened (publicly or privately) as indicated in the Invitation to Bid.

14.1. When Bids are opened publicly they will be read aloud, and the amounts of the base Bids and major alternates (if any) will be made available after the opening of Bids. If applicable, the bid will be opened in accordance with sec. 255.0518, Florida Statutes.

14.2. When Bids are opened privately, an abstract of the same information (will or will not) be made available to Bidders within seven days after the date of Bid opening.

15. BIDS TO REMAIN SUBJECT TO ACCEPTANCE.

All bids will remain subject to acceptance for 120 days after the day of the Bid opening, but Owner may, in its sole discretion, release any Bid and return the Bid security prior to that date.

16. AWARD OF CONTRACT.

16.1. Owner reserves the right to reject any and all Bids, to waive any and all informalities not involving price, time or changes in the Work and to negotiate contract terms with the Successful Bidder, and the right to disregard all nonconforming, nonresponsive, unbalanced or conditional Bids. Also, Owner reserves the right to reject the Bid of any Bidder if Owner believes that it would not be in the best interest of the Project to make and award to the Bidder, whether because the Bid is not responsive or the Bidder is unqualified or of doubtful financial ability or fails to meet any other pertinent standard or criteria established by Owner. Discrepancies in the multiplication of units of Work and unit prices will be resolved in favor of the unit prices. Discrepancies between the indicated sum of any column of figures and the correct sum thereof will be resolved in favor of the correct sum.

16.2. In evaluating Bids, Owner will consider the qualifications of the Bidders, whether or not the Bids comply with the prescribed requirements, and such alternates, unit prices and other data, as may be requested in the Bid Form or prior to the Notice of Award.

16.3. Owner may consider the qualifications and experience of Subcontractors, Suppliers and other persons and organizations proposed for those portions of the Work as to which the identity of Subcontractors, Suppliers, and other persons and organizations must be submitted as provided in the Supplementary Conditions (or as requested by Owner after the Bids are received). Owner also may consider the operating costs, maintenance requirements, performance data and guarantees of major items of materials and equipment proposed for incorporation in the Work when such data is required to be submitted prior to the Notice of Award.

16.4. Owner may conduct such investigations as Owner deems necessary to assist in the evaluation of any Bid and to establish the responsibility, qualifications and financial ability of Bidders, proposed Subcontractors, Suppliers, and other persons and organizations to perform and furnish the Work in accordance with the Contract Documents to Owner's satisfaction within the prescribed time.

16.5. If the contract is to be awarded, it will be awarded to the lowest Bidder whose evaluation by Owner indicates to Owner that the award will be in the best interests of the Project and subject to the Owners Local Preference Policy. No. bidder shall be accepted from, nor will any Contract be awarded to any Bidder who is in arrears to the Owner upon any debt or Contract or who is a defaulter as surety or otherwise upon any obligation to the Owner or who has failed to perform faithfully any previous Contract with the Owner or other party as determined by the Owner.

16.6. If the contract is to be awarded, Owner will give the Successful Bidder a Notice of Award within 120 days after the day of the Bid opening.

16.7. When Bidder is permitted to designate the Contract Time, Bid prices will be compared after adjusting for differences in the time designated in the Bid for Substantial Completion.

17. CONTRACT SECURITY.

Paragraph 5.1 of the General Conditions and the Supplementary Conditions set forth Owner's requirements as to performance and payment Bonds. When the Successful Bidder delivers the executed Agreement to Owner, it must be accompanied by the required performance and payment Bonds.

18. SIGNING OF AGREEMENT.

When Owner gives a Notice of Award to the Successful Bidder, it will be accompanied by the required number of unsigned counterparts of the Agreement with all other written Contract Documents attached. Within ____15__ days thereafter Contractor shall sign and deliver the required number of counterparts of the Agreement and attached documents to Owner with the required Bonds. In the event the successful Bidder fails to execute the Contract and return same to the Owner within the stipulated fifteen (15) days, the Owner may disqualify the Bid, and said Bidder shall not be permitted to contest to the contrary and does waive such right upon submitting a Bid.

19. DISQUALIFICATION OF BIDDER

19.1 Bidder may be disqualified and its Bid rejected for any of the following:

a) Bidder does not meet the Competency of Bidder and Reference requirements set forth herein.
b) Reason to believe that collusion exists among or between Bidders
c) Unbalanced Bid; that is, Bid in which the prices bid for some items are out of all proportion to those Bids of others.
d) Bidder's uncompleted workload, which in the judgment of the Owner, may cause detrimental impact or impair the prompt completion of this Contract.
e) Lack of responsibility on the part of Bidder, (for example, no Bidder would be considered responsible who had failed to carry out any Contract in which the Owner had been directly or indirectly concerned), or to which Bidder failed to perform on other projects.
f) A determination by Owner of the Contractor's lack of experience or lack of competency as may be revealed by qualification statements, financial statements, experience records, references, or other questionnaires.
g) Substantial evidence of bad character or dishonesty.
h) Bidder is involved in any current litigation with Owner.
i) Bidder has defaulted on any contract or is in arrears on any contract.

20. LICENSES, PERMITS, AND CERTIFICATION

20.1 When applicable, vendor must hold a Certificate of Competency issued by the State of Florida or the Palm Beach County Construction Industry Licensing.

20.2 An Occupational License obtained from the Owner shall be required of any person maintaining a permanent business location or branch office within the City of Lake Worth.

20.3 A copy of any licenses and permits shall be submitted with the Bid and must be in the name of the vendor shown on the Bid submittal.

21. PREPARATION EXPENSE

21.1 Neither the Owner nor its representatives will be liable for any expenses incurred in connection with the preparation, presentation or submittal of any Bid.

22. NON-COLLUSION

22.1 Bidder certifies that this Bid is made without prior understanding, agreement, or connection with any individual, firm, partnership, corporation or other entity submitting a Bid for the same materials, services, supplies, or equipment and is in all respects fair and without collusion or fraud. No premiums, rebates, or gratuities are permitted with, prior to, or after any delivery of material or

provisions of services. Any violation of this provision may result in Contract cancellation, return of materials or discontinuation of services, and the possible removal of Bidder from the vendor Bid list(s).

23. CODE OF ETHICS

23.1 If any Bidder violates or is a party to a violation of the Code of Ethics of the Owner, Palm Beach County, and/or of the State of Florida with respect to this Bid, such Bidder may be disqualified from performing the work described in this Bid or from furnishing the goods or services for which this Bid is submitted and may be further disqualified from bidding on any future Bids for work or for goods or services for the Owner.

24. CONFLICT OF INTEREST

24.1 The award is subject to any and all applicable conflict of interest provisions found in the policies or Code of Ordinances of the City, the Palm Beach County Code of Ethics, and found in the Florida Statutes. All Bidders must complete the Conflict of Interest Form attached hereto.

25. DRUG FREE WORKPLACE PROGRAMS

25.1 Preference may be given to businesses with Drug-Free Work Place Programs. Whenever two or more Bids which are equal with respect to price, quality, and service are received by the Owner for the procurement of commodities or contractual services, a Bid received from a business that completes the attached DFW form certifying that it is a DFW may be given preference in the award process.

26. LEGAL REQUIREMENTS

26.1 Federal, State, County and Owner laws, ordinances, rules, codes, guidelines, directives and regulations that in any manner affect the items covered herein apply. Lack of knowledge by the Bidder shall in no way be a cause for relief from responsibility.

27. COMPLIANCE WITH OCCUPATIONAL SAFETY AND HEALTH ACT

27.1 The Bidder certifies that all equipment and materials contained in this Bid shall meet all O.S.H.A. requirements. Bidder further certifies that, if it is the successful Bidder and the equipment and/or materials delivered are subsequently found to be deficient in any O.S.H.A. requirements in effect on the date of delivery, all costs necessary to bring the equipment and/or materials into compliance with the aforementioned requirements shall be borne by the Bidder.

28. NON-APPROPRIATIONS

28.1 The obligations of the Owner to make a Bid award and sign an agreement under the terms of this "Invitation to Bid" are contingent upon funds lawfully appropriated for this purpose. Should funds not be appropriated for this purpose, the Owner, at its sole discretion, shall have the right to reject all Bids.

29. FLORIDA PUBLIC RECORDS ACT AND CONTRACT CONTENT OWNERSHIP

29.1 All material submitted regarding this Bid becomes the property of the Owner. Pursuant to sec. 119.07(1), Fla. Stat., sealed Bids received by the Owner pursuant to a competitive solicitation are subject to disclosure when the Owner provides notice of an intended decision or until thirty (30) after opening of the Bids, whichever is earlier. If the Owner rejects all bids submitted in response to a competitive solicitation and the Owner concurrently provides notice of its intent to reissue the competitive solicitation, the rejected bids remain exempt from sec. 119.07(1), Fla. Stat., until such time as the Owner provides notice of an intended decision concerning the reissued competitive solicitation or until the Owner withdraws the reissued competitive solicitation. A Bid is not exempt from disclosure for longer than 12 months after the initial notice rejecting all Bids made by the Owner. Bidder should take special note of this as it relates to any proprietary information that might

be included in their offer. Any resulting contract may be reviewed by any person after the contract has been executed by the Owner. The Owner has the right to use any or all information/material submitted in response to this bid and/or any resulting contract from the same. Disqualification of a Bidder does not eliminate this right.

29.2 Contractor shall comply with Florida's Public Records Laws, and, if applicable, specifically agrees to:

a) Keep and maintain public records that ordinarily and necessarily would be required by the Owner in order to perform the service.
b) Provide the public with access to public records on the same terms and conditions that the Owner would provide the records and at a cost that does not exceed the cost provided in Chapter 119, Florida Statutes, or as otherwise provided by law.
c) Ensure that public records that are exempt or confidential and exempt from public records disclosure requirements are not disclosed except as authorized by law.
d) Meet all requirements for retaining public records and transfer, at no cost, to the Owner all public records in possession of the Contractor upon termination of the Contract Documents and destroy any duplicate public records that are exempt or confidential and exempt from public records disclosure requirements. All records stored electronically must be provided to the Owner in a format that is compatible with the information technology systems of the Owner.

END OF SECTION

BID FORM MUST BE SUBMITTED IN DUPLICATE

BIDDER: A.O. Wells Enterprises, Inc.

PROJECT: Potable Well No. 12 Reconstruction
for City of Lake Worth, FL
Lake Worth Solicitation No. IFB-15-101

DATE: 12/18/14
(Bid Submitted on)

00300
BID FORM

THIS BID IS SUBMITTED TO:

1. The undersigned BIDDER proposes and agrees, if this Bid is accepted, to enter into an Agreement with OWNER in the form included in the Contract Documents to perform and furnish all Work as specified or indicated in the Contract Documents for the Contract Price and within the Contract Time indicated in this Bid and in accordance with the other terms and conditions of the Contract Documents.

2. BIDDER accepts all of the terms and conditions of the Advertisement or Invitation to Bid and Instructions to Bidders, including without limitation those dealing with the disposition of Bid security. This Bid will remain subject to acceptance for 120 days after the day of Bid opening. BIDDER will sign and submit the Agreement with the Bonds and other documents required by the Bidding Requirements within 15 days after the date of OWNER's Notice of Award.

3. In submitting this Bid, BIDDER represents, as more fully set forth in the Agreement, that:

(a) BIDDER has examined copies of all the Bidding Documents and of the following Addenda (receipt of all which is hereby acknowledged):

Date Number

(b) BIDDER has familiarized itself with the nature and extent of the Contract Documents, Work, site, locality, and all local conditions and Laws and Regulations that in any manner may affect cost, progress, performance or furnishing of the Work.

(c) BIDDER has studied carefully all reports and drawings of subsurface conditions and drawings of physical conditions which are identified in the Division 1: General Requirements as provided in paragraph 4.2 of the General Conditions, and accepts the determination set forth in Division 1: General Conditions of the extent of the technical data contained in such reports and drawings upon which BIDDER is entitled to rely.

(d) BIDDER has obtained and carefully studied (or assumes responsibility for obtaining and carefully studying) all such examinations, investigations, explorations, tests and studies (in addition to or to supplement those referred to in (c) above) which pertain to the subsurface or physical conditions at the site or otherwise may affect the cost, progress, performance or furnishing of the Work as BIDDER considers necessary for the performance or furnishing of the Work at the Contract Price, within the Contract Time and in accordance with the other terms and conditions of the Contract Documents, including specifically the provisions of paragraph 4.2 of the General Conditions; and no additional examinations, investigations, explorations, tests, reports or similar information or data are or will be required by BIDDER for such purposes.

(e) BIDDER has reviewed and checked all information and data shown or indicated on the Contract Documents with respect to existing Underground Facilities at or contiguous to the site and assumes responsibility for the accurate location of said Underground Facilities. No additional examinations, investigations, explorations, tests, reports or similar information or data in respect of said Underground Facilities are or will be required by BIDDER in order to perform and furnish the Work at the Contract Price, within the Contract Time and in accordance with the other terms and conditions of the Contract Documents, including specifically the provisions of paragraph 4.3 of the General Conditions.

(f) BIDDER has correlated the results of all such observations, examinations, investigations, explorations, tests, reports and studies with the terms and conditions of the Contract Documents.

(g) BIDDER has given ENGINEER written notice of all conflicts, errors or discrepancies that it has discovered in the Contract Documents and the written resolution thereof by ENGINEER is acceptable to BIDDER.

(h) This Bid is genuine and not made in the interest of or on behalf of any undisclosed person, firm or corporation and is not submitted in conformity with any agreement or rules of any group, association, organization or corporation; BIDDER has not directly or indirectly induced or solicited any other Bidder to submit a false or sham Bid; BIDDER has not solicited or induced any person, firm or corporation to refrain from bidding; and BIDDER has not sought by collusion to obtain for itself any advantage over any other Bidder or over OWNER.

4. BIDDER agrees to perform all the Work described in Contract Documents, subject to adjustments as provided therein, for the Prices BIDDER provides on the Unit Price Schedule (Page 00300– thru 00300–):

5. BIDDER declares it understands that the unit quantities shown on the Bid Form Unit Price Schedule are approximate only and not guaranteed and are subject to either increase or decrease; and that should the quantities of any of the items of Work be increased, the BIDDER agrees to do the additional Work at the unit prices set out herein, and should the quantities be decreased, BIDDER also understands that final payment shall be made on actual quantities completed at the unit prices, and shall make no claims for anticipated profits for any decrease in the quantities.

6. The BIDDER further declares it understands the OWNER may elect to construct only a portion of the Work covered by these Documents and BIDDER agrees to perform that portion of the Work for which BIDDER is awarded a Contract at the unit prices quoted herein.

7. BIDDER agrees that the Work:

will be substantially complete within 120 calendar days after the date when the Contract Time commences to run as provided in paragraph 2.3 of the General Conditions, and completed and ready for final payment within 150 calendar days after the date when the Contract Time commences to run.

BIDDER accepts the provisions of the Agreement as to liquidated damages in the event of failure to complete the Work on time.

8. The following documents are attached to and made a condition of this Bid:

(a) Required Bid Security in the form of Bid Bond (attached).

(b) Unit Price Schedule on Page(s) 00300-5.

(c) Trench Safety Affidavit on Page(s) 00300-6.

(d) Schedule of Subcontractors (Page(s) 00300-7).

(e) Schedule of Suppliers, Equipment and Materials (Page(s) 00300-8).

(f) Sworn Statements Under Section 287.133(3)(a), Florida Statutes, on Public Entity Crimes on Page(s) 00300-9 and 00300-10.

(g) Certification of Drug Free Workplace Program on Page 00300-11.

9. Communications concerning this Bid shall be telephoned or addressed to:

The phone number and address of BIDDER indicated below.

10. The terms used in this Bid which are defined in the General Conditions of the Construction Contract included as part of the Contract Documents have the meanings assigned to them in the General Conditions.

11. BIDDER's Florida Contractor's License No. CGC035886.

12. BIDDER covenants that it is qualified to do business in the State of Florida and has attached evidence of BIDDER's qualification to do business in the State of Florida, or if not attached, BIDDER covenants to obtain such evidence within five days of request by OWNER to provide evidence.

If BIDDER is:

An Individual

By _____ (SEAL)
(Individual's Name)

_____
(Signature)

doing business as _____

Business address: _____

_____

Phone No. : _____

A Partnership

By _____ (SEAL)
(Firm Name)

_____
(General Partner) (Signature)

Business address: _____

_____

Phone No. : _____

A Corporation

By All Webbs Enterprises, Inc. (SEAL)
(Corporation Name)

Florida
(State of Incorporation)

By David Webb Jr.
(Name of Person Authorized to Sign)

Vice President
(Title)

(Signature)

(Corporate Seal)

Attest _____
(Secretary)

_____
(Signature)

Business address: _____

_____

Phone No. : _____

UNIT PRICE SCHEDULE

Item No.	Item Description	Quantity	Unit	Unit Price	Total Amount
	Schedule A - General Requirements				
A-1	Bonds and Insurance	1	LS		$ 10,000.00
A-2.	Mobilization/Demobilization/General Conditions	1	LS		$ 10,000.00
A-3.	Permit Fees	1	LS		$ 2,000.00
A-4.	Video Taping	1	LS		1,000.00
A-5.	Prepare and Furnish Record Drawings	1	LS		$ 5,000.00
A-6.	General Allowance	1	LS		$ 20,000
	Total Schedule A				$ 48,000.00
	Schedule B - Well Reconstruction				
B-1.	Remove wellhead, column pipe, and well pump	1	LS		$ 12,000.00
B-2.	Remove existing riser casing and well screen	1	LS		$ 8,000.00
B-3.	Clean out borehole of existing well screen (total depth approximately 150 feet) to a nominal 19-inch diameter	70	FT	$ 150.00	$ 10,500.00
B-4.	Drill nominal 8-inch diameter pilot hole from base of existing well (total depth approximately 150 feet) to 250 feet	100	FT	$ 100.00	$ 10,000.00
B-5.	Geophysical Logging (Complete)	1	LS		$ 5,000.00
B-6.	Ream 8-inch diameter pilot hole to nominal 19-inch diameter borehole	100	FT	$ 100.00	$ 10,000.00
B-7.	Furnish and install 12-inch diameter stainless steel well screen from 200 feet to 250 feet	50	FT	$ 300.00	$ 15,000.00
B-8.	Furnish and install 12-inch diameter SDR17 PVC riser casing to 200 feet	200	FT	$ 15.00	$ 3,000.00
B-9.	Furnish and install gravel pack	300	CF	$ 20.00	$ 6,000.00
B-10.	Airlift Development	20	HR	$ 200.00	$ 4,000.00
B-11.	Jetting with simultaneous Airlift Development	80	HR	$ 200.00	$ 16,000.00
B-12.	Pump Development	40	HR	$ 200.00	$ 8,000.00
B-13.	Conduct Step Rate Test	8	HR	$ 200.00	$ 1,600.00
B-14.	Conduct Pre- and Post-Construction Video Logging	2	EA	$ 2,500.00	$ 5,000.00
B-15.	Furnish and install 6" Certa-Loc column pipe and appurtenances	100	FT	$ 50.00	$ 5,000.00
B-16.	Furnish and Install Well Pump	1	LS		$ 35,000.00
B-17.	Wellhead piping modifications	1	LS		$ 20,000.00
B-18.	Disinfection and Water Quality Sampling	1	LS		$ 5,000.00
B-19.	Painting and miscellaneous	1	LS		$ 4,000.00
B-20.	Extra work by drilling crew & drilling equipment	8	HR	$ 200.00	$ 1,600.00
B-21.	Extra work by drilling crew	8	HR	$ 150.00	$ 1,200.00
B-22.	Standby time with rig and drilling crew on-site	8	HR	$ 200.00	$ 1,600.00
B-23.	Standby time with rig on-site and crew off-site	8	HR	$ 150.00	$ 1,200.00
B-24	Formation Water Disposal System	1	LS		$ 16,000.00
B-25.	Fence and Site Restoration	1	LS		$ 10,800.00
	Total Schedule B				$ 209,500.00

UNIT PRICE SCHEDULE

Item No.	Item Description	Quantity	Unit	Unit Price	Total Amount
	Schedule C - Electrical and Instrumentation				
C-1.	Flowmeter	1	LS		$ 5,940.00
C-2.	Instrumentation	1	LS		$ 22,600.00
C-3.	Misc. electrical wire, conduit, and boxes	1	LS		$ 5,625.00
	Total Schedule C				$ 34,165.00
	Total Bid - Schedules A through C				$ 291,665.00

Total Bid (in words):

Two hundred ninety one thousand six hundred sixty five dollars

PROJECT NO: B4015.00

TRENCH SAFETY AFFIDAVIT

(FAILURE TO COMPLETE THIS FORM MAY RESULT IN THE BID BEING DECLARED NON-RESPONSIVE)

All Webbs Enterprises, Inc. (NAME OF CONTRACTOR) hereby provides written assurance that compliance with applicable Trench Safety Standards identified in the Occupational Safety & Health Administration's Excavation Safety Standards, (OSHA) 29 C.F.R.S. 1926.650 Subpart P will be adhered to during trench excavation in accordance with Florida Statutes 553.60 through 553.64 inclusive (1990), "Trench Safety Act".

The undersigned acknowledges that included in the various items of the proposal and in the Total Bid Price are costs for complying with the Florida "Trench Safety Act" as summarized below: (Attach additional sheets as necessary)

Schedule Item	Trench Safety Measure (Slope, Trench Shield, etc.	Cost
B12	Slope	$ 1.00
		$
		$
		$
		$
		$
	Total	$
		$

(Signature) 12/15/14 (date)

STATE OF Florida

COUNTY OF Palm Beach

Subscribed and Sworn to (or affirmed) before me on 12/15/14 (date) by David Webb, Jr (name). He/she is personally known to me or has presented _____ (type of identification) as identification.

Vivian L. Murphy — Notary Public Signature and Seal

Vivian L. Murphy — Print Notary Name and Commission No.

VIVIAN L. MURPHY
Notary Public - State of Florida
My Comm. Expires Apr 26, 2018
Commission # FF 079914
Bonded Through National Notary Assn.

SCHEDULE OF SUBCONTRACTORS

List Proposed Subcontractors	Category of Work
Stuart Fence	Fence
Energy Efficient	Electrical

SCHEDULE OF EQUIPMENT AND MATERIALS

Description	Manufacturer	Model
See attached Equipment List		

All Webb's Enterprises, Inc.
Equipment

The following is a list of equipment owned by All Webb's Enterprises, Inc. Not all equipment will be utilized. All equipment is in excellent working order.

8,000 SQUARE FOOT REPAIR FACILITY LOCATED IN JUPITER, FLORIDA WITH ONSITE DIESEL MECHANIC

2004 SOILMEC MR 7000 RIG WITH CAT 3408 AND ALL ACCESSORIES

2004 SOILMEC HTD TOPHEAD DRIVE (BROCHURE ATTACHED UNDER SEPARATE COVER)
1981 CHALLENGER 360 DRILL RIG WITH MUD SYSTEMS; 3408 CAT 485 HP TURBO, ALLISON 5 SPEED AUTOMATIC TRANSMISSION, 18" HYDROMATIC, WESTINGHOUSE ELECTRIC WELDER, FOSTER CAT HEADS WITH MAKEUP AND BREAKOUT TONGS "C" AND "B", BEAN TRIPLEX WASH DOWN PUMP, HOWARD TURNER 18" TABLE SLIPS, 97' SINGLE PIECE MAST WITH STATIC HOOK LOAD (SHL) 200,000 POUNDS, 10.5 SUB STRUCTURE V-DOOR WITH 60' CAT WALKS AND DEAD MAN, PIPE RACKS, HALIBURTON WIRE LINE UNIT, HYDRAULIC SAND LINE, WEIGHT INDICATORS, 7/8" WIRE ROPE, RIG LIGHTS, TRANSFORMER SUB BASE, RAMPS, CRIBBING AND JACKS

1981 CHALLENGER 320 DRILL RIG WITH MUD SYSTEMS; 3408, 485 HP TURBO CAT, 5-SPEED ALLISON AUTOMATIC TRANSMISSION, 18" HYDROMATIC, 84' SINGLE PIECE MAST WITH STATIC HOOK LOAD (SHL) OF 150,000 POUNDS AND RACKING BOARD, SANDLINE, WEIGHT INDICATORS, TONGS, 18" HOWARD TURNER TABLE SLIPS, ELEVATORS, BUSHINGS, SUBS, BITS, TOOLS, DOG HOUSE, FUEL TANKS, 2-MISSION 75 TON BLOCKS, 7/8" CABLE, GEOGRAPH, BEAR AUTO DRILLER, WIRE LINE UNIT FLOW LINES, BOP, HEADERS

1994 SCHRAMM ROTADRILL T300M WITH PORTABLE MUD SYSTEM; 210 FORD F800 1460 TURBO CHARGED DIESEL WITH 13 SPEED TRANSMISSION, CHELSEA 912 PTO, TOP HEAD ROTATION, RAPID FEED PULLUP AND PULLDOWN, 7500 BARE DRUM PULLOVER JIB BOOM, 10,000 BARE DRUM PULLOVER FIXED PULLEYS, MISSION MAGNUM 3X4X13 CENTRIFUGAL PUMP(300 GPM @ 200PSI), LeROI 250 ROTARY SCREW TYPE AIR COMPRESSOR (250 CFM @ 150 PSI, 10 PIPE LAZY SUSAN)

LOGGING TRUCK WITH 1998 CENTURY GEOPHYSICAL COMPULOG III DOWNHOLE DIGITAL LOGGING SYSTEM, ALL LOGGING TOOLS, STRIPPERS, EXTRA CABLE, CABLES, CENTRALIZERS MOUNTED IN 1981 FORD PANEL VAN WITH 5000 KW HONDA GENERATOR AND ELECTRIC DRAWDOWNS AND ALL RELATED EQUIPMENT

2003 LAVAL R-2000 DUAL CAM WITH 360° ROTATION, INSTACAM VIDEO PRINTER, VIDEO TITLER AND DVD RECORDER, HYDRAULIC WINCH WITH 4,000 FT CABLE

1981 COOPER RIG WITH SPICER 5 SPEED TRANSMISSION, SINGLE DRUM DRAW WORKS ASSEMBLY WITH WITCHITA CLUTCH, 55' MAST WITH 35,000 LB HOOK LOAD, RAMSEY H-700 WINCH

1978 INTERNATIONAL CEMENT PUMP TRUCK WITH BS PAC MAHER HIGH PRESSURE TRIPLEX PUMP, 2-15 BARREL RIBBON AUGER MIXING AND BLENDING TANKS, 1-150 BAG CEMENT POT, ALL CONNECTIONS AND HOSES

2000 BESSER APPCO CEMENT FILTER VENT

1998 GMC MANITEX BOOM TRUCK C7H064, 275HP 56,000 GVW, 36" BULKHEAD,22' STEEL FLATBED, 77' BOOM, 3 SEC PUMP, 70 GALLON HYD TANK, 9/16" WIRE ROPE DIA, 5 TON WEIGHTED HOOK, HYCAS OVERLOAD WARNING, 15T ISHV, F/2-3 PART LINE, 29' FIXED JIB, PTO MUNCIE, AIR BRAKE SYSTEM, 6.8 CAT DIESEL 275 HP ENGINE, DUAL BATTERIES, 10 SPEED RT7608LL FULLER TRANS, 18K EATON FRONT AXLE, 40K REAR AXLE, AM/FM, STEREO RADIO, AIR SUSPENSION HIGH BACK DRIVER SEAT.

1992 FORD F-450 WITH BOOM

1986 FORD F-450 WITH CRANE

1970 INTERNATIONAL BOOM TRUCK

1995 FORD F-350 FLAT BED

1983 FORD FLATBED

1980 BRIGADERE ROAD TRACTOR

1990 FORD F-450 WITH WELDER

1987 ISUZU SUPPORT TRUCK WITH WELDERS

1989 FORD RANGER PICKUP TRUCK

1993 CHEVY PICK UP TRUCK

1970 FORD PICKUP

1997 FORD F-150 PICK UP TRUCK

1975 MACK TRUCK WITH CRANE

1972 MACK SEMI WITH ROLLING TAIL BOARD AND 64 TON TULSA WINCH

1974 INTERNATIONAL TRANS STAR 4200 TRACTOR WITH 4,000 GALLON WATER TANK, HOSES AND PUMP

1968 MACK SEMI TRUCK

1989 FREIGHTLINER 80,000 LB TRACTOR

91 HOBBS 42' TRAILER WITH HYDRAULICALLY RAISED DOG HOUSE, GEOGRAPH BEAR AUTO DRILLER, LOCKERS, TOOL BOXES, KNOWLEDGE BOX, TOOL RACKS, STAIRS, 1200 GALLON FUEL TANK, 2-DRUM 90 NUT OIL TANK, 2 DRUM HYDRAULIC OIL TANK, 2 DRUM 40 WT OIL TANK

1996 CHALLENGER 50 TON LOW BOY

1976 GROVE 15 TON ROUGH TERRAIN CRANE

1991 LIEBHERR 2 1/2 YARD FRONT END LOADER

10 SEMI TRAILERS (VARIOUS)

LINCOLN PIPE LINE SPECIAL WELDER, LEADED WITH ALL NECESSITIES

MILLER TRAIL BLAZER WELDER WITH LEADS AND ALL NECESSITIES

3 TANK MUD SYSTEM WITH SHALE SHAKER, DESANDER, TWIN CENTRIFUGAL PUMPS, MIXING TANK, CHEMICAL TANK

3 TANK MUD SYSTEM WITH ELECTRIC MOTOR CONTROL BREAKERS & WIRING, DESANDERS DUEL SHALE SHAKER, DESANDERS, AGITATORS HOPPER SYSTEM AND CONNECTORS

1 CATERPILLAR 416-4 WHEEL DRIVE BACKHOE

1 CATERPILLAR 430-D WHEEL DRIVE BACKHOE

STINGER 63', 18,000 BOOM MOUNTED ON MACK TRACTOR WITH OUT RIGGERS WOODEN OVER STEEL 16' B&D WITH LIFTING BAILS, TOOLS, CHAINS, SLINGS AND TIE DOWNS

5-PACKERS, 2" TO 26" WITH FITTINGS, 1-5000' SPOOL 1/4" S.S. INFLATION LINE, 1-3000' SPOOL 1/4" S.S. INFLATION LINE, INFLATION MANIFOLD AND EXPANSION SLEEVES

BULK UNIT SEMI TRAILER 500 BAG CAPACITY WITH JOY PNEUMATIC AIR COMPRESSOR AND DISCHARGE MANIFOLD

ELLIS WILLIAMS 7 1/4 X 15 MUD PUMP POWERED BY 6V 92 SILVERSTREAK DETROIT, AIR CONNECTIONS HOPPER AND SUCTION LINES

EMSCO D-300 7.5 X 14 MUD PUMP POWERED BY TWIN 4-71 DETROITS SUCTION AND DISCHARGE HOSES

375 SW GENERATOR POWERED BY B12 CUMMINGS WITH CONTROL BOXES AND WIRING MOUNT ON BROWN SEMI TRAILER

INGERSOL RAND 300/200 AIR COMPRESSOR WITH HOSES

INGERSOL RAND 400/200 AIR COMPRESSOR

3-TANK MUD SYSTEM

ELLIS WILLIAMS MUD PUMP 14-400

21,000 GALLON FRAC TANKS

7,500 GALLON STEEL TANKER

FITTINGS, VALVES, RUBBERS, GASKETS, BOP RINGS, CLUTCHES AIR EQUIPMENT, ETC. ALL HANDLING EQUIPMENT, BITS, SUBS, COLLARS AND DRILL PIPE, CASINGS, TOOLS AND HOSES

3-8" DRILL COLLARS 6 5/8 API ; 6-6 1/2" DRILL COLLARS 4 1/2 H-90; 4-4 1/2" DRILL COLLARS 3 1/2 IF; 16" REAMING BARREL WITH 8" COLLAR; 18" REAMING BARREL WITH 8" COLLAR; 24" REAMING BARREL WITH 8" COLLAR; LIFTING NUBBS; 4 1/2, 3 1/2, AND 2 7/8 ELEVATORS; 2300' 3 1/2 IF DRILL PIPE; 2300' 2 7/8 PAC DRILL PIPE; 7-3 1/8" DRILL COLLAR WITH PAC CONNECTIONS; 2500' 1 1/2" HYDRILL TUBING; 6", 8", 12" STEEL & FIBERGLASS CASINGS; EXTRA "C" TONGS; 2 SETS TORCHES; 6 5/8" OCTAGON KELLY BAR WITH 6 5/8" API CONNECTIONS; 3.5" ID HOWARD TURNER 100 TON SWIVEL; 20" ROTATING HEAD WITH FLOWLINE; 6" KELLY BAR WITH ROLLER BUSHING; 2.5" SQUARE KELLY BAR WITH ROLLER BUSHING; 3.5" SQUARE KELLY BAR WITH BUSHING; 4 1/4" SQUARE KELLY BAR WITH BUSHING; 3-9" DRILL COLLARS 7 5/8" API; 8-8" DRILL COLLARS . 6 5/8" API; 1-13" DRILL COLLARS 6 5/8" API; 6-6 1/2" DRILL COLLARS 4 1/2" FULL HOLE; ALL CROSSOVER SUBS; 2300' OF 4 1/2" XH DRILL PIPE; ELECTRICAL CONTROLS; ROTATING WELL HEAD; 5-8" DRILL COLLARS; 4-6" DRILL COLLARS, ETC.

SWORN STATEMENT UNDER SECTION 287.133(3)(a), FLORIDA STATUTES, ON PUBLIC ENTITY CRIMES

THIS FORM MUST BE SIGNED IN THE PRESENCE OF A NOTARY PUBLIC OR OTHER OFFICER AUTHORIZED TO ADMINISTER OATHS.

1. This sworn statement is submitted to City of Lake Worth, Florida
[print name of the public entity]
by David Webb Jr., Vice President
[print individual's name and title]
for All Webbs Enterprises, Inc.
[print name of entity submitting sworn statement]
whose business address is 309 Commerce Way
Jupiter, FL 33477
and (if applicable) its Federal Employer Identification Number (FEIN) is 59-2418764
(If the entity has no FEIN, include the Social Security Number of the individual signing this sworn statement: _____.)

2. I understand that a "public entity crime" as defined in Paragraph 287.133(1)(g), Florida Statutes, means a violation of any state or federal law by a person with respect to and directly related to the transaction of business with any public entity or with an agency or political subdivision of any other state or of the United States, including, but not limited to, any bid or contract for goods or services to be provided to any public entity or an agency or political subdivision of any other state or of the United States and involving antitrust, fraud, theft, bribery, collusion, racketeering, conspiracy, or material misrepresentation.

3. I understand that "convicted" or "conviction" as defined in Paragraph 287.133(1)(b), Florida Statutes, means a finding of guilt or a conviction of a public entity crime, with or without an adjudication of guilt, in any federal or state trial court of record relating to charges brought by indictment or information after July 1, 1989, as a result of jury verdict, nonjury trial, or entry of a plea of guilty or nolo contendere.

4. I understand that an "affiliate" as defined in Paragraph 287.133(1)(a), Florida Statutes, means:

   1. A predecessor or successor of a person convicted of a public entity crime; or
   2. An entity under the control of any natural person who is active in the management of the entity and who has been convicted of a public entity crime. The term "affiliate" includes those officers, directors, executives, partners, shareholders, employees, members, and agents who are active in the management of an affiliate. The ownership by one person of shares constituting a controlling interest in another person, or a pooling of equipment or income among persons when not for fair market value under an arm's length agreement, shall be a prima facie case that one person controls another person. A person who knowingly enters into a joint venture with a person who has been convicted of a public entity crime in Florida during the preceding 36 months shall be considered an affiliate.

5. I understand that a "person" as defined in Paragraph 287.133(1)(c), Florida Statutes, means any natural person or entity organized under the laws of any state or of the United States with the legal power to enter into a binding contract and which bids or applies to bid on contracts for the provision of goods or services let by a public entity, or which otherwise transacts or applies to transact business with a public entity. The term "person" includes those officers, directors, executives, partners, shareholders, employees, members, and agents who are active in management of an entity.

6. Based on information and belief, the statement which I have marked below is true in relation to the entity submitting this sworn statement. [Please indicate which statement applies.]

✓ Neither the entity submitting this sworn statement, nor any officers, directors, executives, partners, shareholders, employees, members, or agents who are active in management of the entity, nor any affiliate of the entity has been charged with and convicted of a public entity crime subsequent to July 1, 1989.

_____ The entity submitting this sworn statement, or one or more of the officers, directors, executives, partners, shareholders, employees, members, or agents who are active in management of the entity, or an affiliate of the entity has been charged with and convicted of a public entity crime subsequent to July 1, 1989.

_____ The entity submitting this sworn statement, or one or more of its officers, directors, executives, partners, shareholders, employees, members, or agents who are active in the management of the entity, or an affiliate of the entity has been charged with and convicted of a public entity crime subsequent to July 1, 1989. However, there has been a subsequent proceeding before a Hearing Officer of the State of Florida, Division of Administrative Hearings and the Final Order entered by the Hearing Officer determined that it was not in the public interest to place the entity submitting this sworn statement on the convicted vendor list. [attach a copy of the final order]

I UNDERSTAND THAT THE SUBMISSION OF THIS FORM TO THE CONTRACTING OFFICER FOR THE PUBLIC ENTITY IDENTIFIED IN PARAGRAPH 1 (ONE) ABOVE IS FOR THAT PUBLIC ENTITY ONLY AND, THAT THIS FORM IS VALID THROUGH DECEMBER 31 OF THE CALENDAR YEAR IN WHICH IT IS FILED. I ALSO UNDERSTAND THAT I AM REQUIRED TO INFORM THE PUBLIC ENTITY PRIOR TO ENTERING INTO A CONTRACT IN EXCESS OF THE THRESHOLD AMOUNT PROVIDED IN SECTION 287.017, FLORIDA STATUTES FOR CATEGORY TWO OF ANY CHANGE IN THE INFORMATION CONTAINED IN THIS FORM:

David W
[signature]

12/15/14
[date]

STATE OF FL

COUNTY OF Palm Beach

Subscribed and Sworn to (or affirmed) before me on 12/15/14 [date] by David Webb Jr. [name]. He/she is personally known to me or has presented _____ [type of identification] as identification.

Vivian L. Murphy
[Notary's Signature and Seal]

Vivian L. Murphy
Print Notary Name and Commission No.

Form PUR 7068 (Rev. 04/10/91)
M/R 03/06/92

VIVIAN L. MURPHY
Notary Public - State of Florida
My Comm. Expires Apr 26, 2018
Commission # FF 079914
Bonded Through National Notary Assn.

CERTIFICATION OF DRUG FREE WORKPLACE PROGRAM

I certify the firm of All Webbs Enterprises, Inc. maintains a drug-free workplace program, and that the following conditions are met:

1. We publish a statement notifying employees that the unlawful manufacturer, distribution, dispensing, possession, or use of a controlled substance is prohibited in the workplace and specifying that actions will be taken against employees for violations of such prohibitions.

2. We inform employees about the dangers of drug abuse in the workplace, the company's policy of maintaining a drug-free workplace, any available drug counseling, rehabilitation, and employee assistance programs, and the penalties that may be imposed upon employees for drug abuse violations.

3. We give each employee engaged in providing the commodities or contractual services that are under bid a copy of the statement specified in subsection one (1).

4. In the statement specified subsection one (1) we notify the employee that; a condition of working in the commodities or contractual services that are under bid, the employee will abide by the terms of the statement and will notify the employer of any conviction of, or plea of guilty nolo contendere to any violation of Chapter 893 or of any controlled substance law of the United States or any state, for a violation occurring in the workplace no later than five (5) days after such conviction.

5. We impose a sanction on, or require the satisfactory participation in a drug abuse assistance or rehabilitation program if such is available in the employee's community, by any employee who is convicted.

6. We make a good faith effort to continue to maintain a drug-free workplace through implementation of this section.

As the person authorized to sign the statement, I certify that this firm complies fully with the above requirements.

Contractor's Signature

00500
AGREEMENT

THIS AGREEMENT is dated and will be effective on the _____ day of _____ in the year 20__, by and between the City of Lake Worth (hereinafter called OWNER) and _____ All Webbs Enterprises, Inc. _____ (hereinafter called CONTRACTOR).

OWNER and CONTRACTOR, in consideration of the mutual covenants hereinafter set forth, agree as follows:

ARTICLE 1. WORK.

CONTRACTOR shall complete all Work as specified or indicated in the Contract Documents. The Work is generally described as follows:

Reconstruction of Surficial Aquifer Well No. 12.

ARTICLE 2. ENGINEER

The Project has been designed by Mock, Roos & Associates, Inc., 5720 Corporate Way, West Palm Beach, FL 33407,who is hereinafter called ENGINEER and who is to act as OWNER's representative, assume all duties and responsibilities and have the rights and authority assigned to ENGINEER in the Contract Documents in connection with completion of the Work in accordance with the Contract Documents.

ARTICLE 3. CONTRACT TIME.

3.1. The Work will be substantially completed within 120 days from the date when the Contract Time commences to run as provided in paragraph 2.3 of the General Conditions and shall be finally complete and ready for final payment in accordance with paragraph 14.13 of the General Conditions within150 days from the date when the Contract Time commences to run.

3.2 All time limits for Milestones, if any, Substantial Completion and completion and readiness for final payment as stated in the Contract Documents are of the essence of the Contract.

3.3. **LIQUIDATED DAMAGES. OWNER and CONTRACTOR recognize that time is of the essence of this Agreement and that OWNER will suffer financial loss if the Work is not completed within the times specified in paragraph 3.1 above, plus any extensions thereof allowed in accordance with Article 12 of the General Conditions. They also recognize the delays, expense and difficulties involved in proving in a legal or arbitration proceeding the actual loss suffered by OWNER if the Work is not completed on time. Accordingly, instead of requiring any such proof, OWNER and CONTRACTOR agree that as liquidated damages for delay (but not as a penalty) CONTRACTOR shall pay OWNER Five Hundred and 00/100 dollars ($ 500.00) for each day that expires after the time specified in paragraph 3.1 for Substantial Completion until the Work is substantially complete. After Substantial Completion if CONTRACTOR shall neglect, refuse or fail to complete the remaining Work within the Contract Time or any proper extension thereof granted by OWNER, CONTRACTOR shall pay OWNER Five Hundred and 00/100 dollars ($500.00) for each day that expires after the time specified in paragraph 3.1 for completion and readiness for final payment.**

ARTICLE 4. CONTRACT PRICE.

OWNER shall pay CONTRACTOR for completion of the Work in accordance with the Contract Documents, subject to adjustment as provided therein, in current funds as follows:

4.1 An amount equal to the sum of the established unit price for each separately identified item on the Unit Price Schedule times the estimated quantity of that item:

TOTAL OF ALL UNIT PRICES Two Hundred Ninety One Thousand Six Hundred Sixty Five and 00/100 ($ 291,665.00)
(use words) (figures)

which is based on the unit price(s) in the Bid Form Unit Price Schedule for Unit Bid Items numbered A-1 to C-3.

ARTICLE 5. PAYMENT PROCEDURES.

CONTRACTOR shall submit Applications for Payment in accordance with Article 14 of the General Conditions. Applications for Payment will be processed by ENGINEER as provided in the General Conditions.

5.1. PROGRESS PAYMENTS. OWNER shall make progress payments on account of the Contract Price on the basis of CONTRACTOR's Applications for Payment as recommended by ENGINEER, on or about the 10th day of each month during construction as provided below. All progress payments will be on the basis of the progress of the Work measured by the schedule of values established in paragraph 2.9 of the General Conditions (and in the case of Unit Price Work based on the number of units completed) or, in the event there is no schedule of values, as provided in Division 1: General Requirements.

5.1.1 Prior to Substantial Completion, progress payments will be made in an amount equal to the percentage indicated below, but, in each case, less the aggregate of payments previously made and less such amounts as ENGINEER shall determine, or OWNER may withhold, in accordance with paragraph 14.7 of the General Conditions, less liquidated damages, if any.

90% of Work completed.
90% of materials and equipment not incorporated in the Work (but delivered, suitably stored and accompanied by documentation satisfactory to OWNER as provided in paragraph 14.2 of the General Conditions).
95% of the work complete after the Contractor has completed over 50% of the Work.

5.1.2 Upon Substantial Completion, in an amount sufficient to increase total payments to CONTRACTOR to 98% of the Contract Price, less such amounts as ENGINEER shall determine, or OWNER may withhold, in accordance with paragraph 14.7 of the General Conditions, less liquidated damages, if any.

5.2. FINAL PAYMENT. Upon final completion and acceptance of the Work in accordance with paragraph 14.13 of the General Conditions, and settlement of all claims, including liquidated damages, if any, OWNER shall pay the remainder of the Contract Price as recommended by ENGINEER as provided in said paragraph 14.13.

ARTICLE 6. (This Article left blank intentionally)

ARTICLE 7. CONTRACTOR'S REPRESENTATIONS.

In order to include OWNER to enter into this Agreement CONTRACTOR makes the following representations:

7.1. CONTRACTOR has familiarized itself with the nature and extent of the Contract Documents, Work, site locality, and all local conditions and Laws and Regulations that in any manner may affect cost, progress, performance or furnishing of the Work.

7.2. CONTRACTOR has studied carefully all reports of explorations and tests of subsurface conditions and drawings of physical conditions which are identified in the Division 1: General Requirements as provided in paragraph 4.2 of the General Conditions, and accepts the determination set forth in Division 1: General Requirements of the extent of the technical data contained in such reports and drawings upon which CONTRACTOR is entitled to rely, if any.

7.3. CONTRACTOR has obtained and carefully studied (or assumes responsibility for obtaining and carefully studying) all such examinations, investigations, explorations, tests, reports and studies, if any, (in addition to or to supplement those referred to in paragraph 7.2 above) which pertain to the subsurface of physical conditions at or contiguous to the site or otherwise may affect the cost, progress, performance or furnishing of the Work as CONTRACTOR considers necessary for the performance or furnishing of the Work at the Contract Price, within the Contract Time and in accordance with the other terms and conditions of the Contract Documents, including specifically the provisions of paragraph 4.2 of the General Conditions; and no additional examinations, investigations, explorations, tests, reports, studies or similar information or data are or will be required by CONTRACTOR for such purposes.

7.4. CONTRACTOR has reviewed and checked all information and data shown or indicated on the Contract Documents, if any, with respect to existing Underground Facilities at or contiguous to the site and assumes responsibility for the accurate location of said Underground Facilities. No additional examinations, investigations, explorations, tests, reports, studies or similar information or data in respect of said Underground Facilities are or will be required by CONTRACTOR in order to perform and furnish the Work at the Contract Price, within the Contract Time and in accordance with the other terms and conditions of the Contract Documents, including specifically the provisions of paragraph 4.3 of the General Conditions.

7.5. CONTRACTOR has correlated the results of all such observations, examinations, investigations, explorations, tests, reports and studies with the terms and conditions of the Contract Documents.

7.6. CONTRACTOR has given ENGINEER written notice of all conflicts, errors or discrepancies that he has discovered in the Contract Documents and the written resolution thereof by ENGINEER is acceptable to CONTRACTOR.

7.7 CONTRACTOR acknowledges that the Contract Documents are generally sufficient to indicate and convey an adequate understanding of all terms and conditions for performance and furnishing of the Work.

ARTICLE 8. CONTRACT DOCUMENTS.

The Contract Documents which comprise the entire Agreement between OWNER and CONTRACTOR concerning the Work consist of the following:

8.1. This Agreement consisting of 7 pages.

8.2. Exhibits to this Agreement identified as: Contractor's Corporate Resolution; Contractor's Certificate of Insurance; _____ inclusive.

8.3. Performance Bond and Payment Bond consisting of 4 pages (plus Power of Attorney Forms as applicable).

8.4. Notice of Award and Notice to Proceed.

8.5. General Conditions consisting of 33 pages.

8.6. Supplementary Conditions consisting of 7 pages.

8.7. Bid documents as listed in the table of contents of the Project Manual.

8.8. Specifications consisting of _82_ pages.

8.9. Drawings not attached hereto but are listed in Section 00860 List of Drawings.

8.10. Addenda numbers 1_ to 2_, inclusive.

8.11. CONTRACTOR's Bid consisting of 16___ pages.

8.12. Documentation submitted by CONTRACTOR prior to Notice of Award.

8.13. The following which may be delivered or issued after the Effective Date of the Agreement and are not attached hereto: All Written Amendments and other documents amending, modifying, or supplementing the Contract Documents pursuant to paragraphs 3.4 and 3.5 of the General Conditions.

8.14. The documents listed under Article 8 above are attached to this Agreement (except as expressly noted otherwise above).

8.15. Notice of Compliance with Chapter 556, Florida Statutes, consisting of 1 page.

8.16. Any other document attached hereto or incorporated herein.

There are no Contract Documents other than those listed above in this Article 8. The Contract Documents may only be amended, modified or supplemented as provided in paragraphs 3.4 and 3.5 of the General Conditions.

ARTICLE 9. MISCELLANEOUS.

9.1. Terms used in this Agreement which are defined in Article 1 of the General Conditions will have the meanings indicated in the General Conditions.

9.2. No assignment by a party hereto of any rights under or interests in the Contract Documents will be binding on another party hereto without the written consent of the party sought to be bound; and specifically but without limitation moneys that may become due and moneys that are due may not be assigned without such consent (except to the extend that the effect of this restriction may be limited by law), and unless specifically stated to the contrary in any written consent to an assignment, no assignment will release or discharge the assignor from any duty or responsibility under the Contract Documents.

9.3. OWNER and CONTRACTOR each binds itself, its partners, successors, assigns and legal representatives to the other party hereto, its partners, successors, assigns and legal representatives in respect of all covenants, agreements and obligations contained in the Contract Documents.

9.4. Any provision or part of the Contract Documents held to be void or unenforceable under any Law or Regulation shall be stricken, and all remaining provisions shall continue to be valid and binding upon OWNER and CONTRACTOR, who agree that the Contract Documents shall be reformed to replaced such stricken provision or part thereof with a valid and enforceable provisions that comes as close as possible to expressing the intention of the stricken provision.

9.5 A person or affiliate who has been placed on the convicted vendor list following a conviction for a public entity crime may not submit a Bid on a Contract to provide any goods or services to a public entity, may not submit a Bid on a Contract with a public entity for the construction or repair of a public building or public work, may not be awarded or perform Work as a Contractor, Supplier, Subcontractor, or Consultant under a Contract with any public entity, and may not transact business with any public entity in excess of the threshold amount provided in Section 287.017, Florida Statutes, for Category Two for a period of 36 months from the date of being placed on the convicted vendor list.

9.6 In accordance with Palm Beach County ordinance number 2011-009, the Contract Documents may be subject to investigation and/or audit by the Palm Beach County Inspector General. Contractor should review such ordinance in order to be aware of its rights and/or obligations under such ordinance and as applicable.

9.7 Failure of either party to enforce or exercise any right(s) under the Contract Documents shall not be deemed a waiver of either party's right to enforce said right(s) at any time thereafter.

9.8 TO ENCOURAGE PROMPT AND EQUITABLE RESOLUTION OF ANY LITIGATION, EACH PARTY HEREBY WAIVES ITS RIGHTS TO A TRIAL BY JURY IN ANY LITIGATION RELATED TO THE CONTRACT DOCUMENTS.

9.9 The Contractor is, and shall be, in the performance of all Work under the Contract Documents, an Independent Contractor, and not an employee, agent, or servant of the Owner. All persons engaged in any of the Work performed pursuant to the Contract Documents shall at all times and in all places be subject to the Contractor's sole direction, supervision and control.

9.10 The Contractor shall maintain adequate records to justify all charges, expenses, and costs incurred in estimating and performing the Work for at least five (5) years after final payment is

made. The Owner shall have access to such books, records, and documents as required for the purpose of inspection or audit during normal business hours at the Contractor's place of business. Under no circumstances will Contractor be required to disclose any confidential or proprietary information regarding its products and service costs.

9.11 The Contract Documents shall not be construed more strongly against either party regardless of who was more responsible for its preparation.

9.12 Contractor shall comply with Florida's Public Records Laws, and specifically agrees to:

a) Keep and maintain public records that ordinarily and necessarily would be required by the Owner in order to perform the service.

b) Provide the public with access to public records on the same terms and conditions that the Owner would provide the records and at a cost that does not exceed the cost provided in Chapter 119, Florida Statutes, or as otherwise provided by law.

c) Ensure that public records that are exempt or confidential and exempt from public records disclosure requirements are not disclosed except as authorized by law.

d) Meet all requirements for retaining public records and transfer, at no cost, to the Owner all public records in possession of the Contractor upon termination of the Contract Documents and destroy any duplicate public records that are exempt or confidential and exempt from public records disclosure requirements. All records stored electronically must be provided to the Owner in a format that is compatible with the information technology systems of the Owner.

ARTICLE 10. INDEMNIFICATION.

10.1. Contractor shall indemnify and hold harmless Owner and Engineer and their respective officers, and employees for liabilities, damages, losses, and costs, including but not limited to, reasonable attorney's fees, to the extent caused by the negligence, recklessness, or intentional wrongful misconduct of the Contractor and persons employed or utilized by the Contractor in the performance of the construction contract.

10.2. It is the specific intent of the parties hereto that the foregoing indemnification complies with section 725.06, Florida Statutes. It is further the specific intent and agreement of the parties that all of the Contract Documents on this Project are hereby amended to include the foregoing indemnification and the "Specific Consideration" therefore.

10.3 Nothing in the Contract Documents shall be construed or interpreted as consent by the OWNER to be sued, nor as a waiver of sovereign immunity beyond the waiver or limits provided in section 768.28, Florida Statutes.

REMAINDER OF THIS PAGE INTENTIONALLY LEFT BLANK
SIGNATURE PAGE FOLLOWS

IN WITNESS WHEREOF, OWNER AND CONTRACTOR have signed this Agreement in four parts. Two counterparts have been delivered to OWNER, and one counterpart each to CONTRACTOR and ENGINEER. All portions of the Contract Documents have been signed or identified by OWNER and CONTRACTOR or by ENGINEER on their behalf.

CITY OF LAKE WORTH, FLORIDA

By: _____
Pam Triolo, Mayor

ATTEST

_____
Pamela J. Lopez, City Clerk

Approved as to form and legal sufficiency:

_____ FOR
Glen J. Torcivia, City Attorney

CONTRACTOR: All Works Enterprises Inc

By: _____

Print Name: David Works Jr

Title: Vice President

[Corporate Seal]

STATE OF FL)
COUNTY OF Palm Bch)

The foregoing instrument was acknowledged before me this 8 day of Jan, 2015 by David W. Works Jr, as Vice-Pres of All Works Enterprises, Inc., a Florida corporation, and who is personally known to me or who has produced the following _____ as identification.

Notary Public:

Vivian L. Murphy

VIVIAN L. MURPHY
Notary Public - State of Florida
My Comm. Expires Apr 26, 2018
Commission # FF 079914
Bonded Through National Notary Assn.

PROJECT: Potable Well No. 12 Reconstruction
for City of Lake Worth, FL
Lake Worth Solicitation No. IFB-15-101

00501
OPINION OF ATTORNEY

This is to certify that I have examined the attached Contract Documents, that after such examination I am of the opinion that the execution of the Agreement, the Performance Bond and Payment Bond are in due and proper form.

C D [illegible] PA
Attorney for Owner

This the 11th day of Feb, 2015.

INSURANCE/SURETY BONDS
JOHNSON
& COMPANY

December 30, 2014

The City of Lake Worth, Florida
c/o Mock, Roos & Associates, Inc.
5720 Corporate Way
West Palm Beach, Florida 33407

Re: Authority to Date Bonds and Powers of Attorney
Principal: All Webbs Enterprises, Inc.
Project: Ref. No. B4015.00, Lake Worth – Potable Well No. 12 Reconstruction, Lake Worth, Florida
Bond # 0189788

To Whom It May Concern:

Please be advised that as Surety on the above referenced bond, we hereby authorize the The City of Lake Worth, Florida to date the Agreement, Bonds, and Powers of Attorney for the captioned project after the award of the Contract.

Yours very truly,

Berkley Insurance Company

Joseph D. Johnson, Jr.
Attorney-in-Fact
Florida Resident Agent

JDJjr/jhb

P.O. Drawer 672 • Orlando, FL 32802-0672 • 801 N. Orange Avenue, Suite 510 • Orlando, FL 32801-5202 (407) 843-1120
(800) 331-3379 • FAX (407) 843-5772

00610

Construction Performance Bond

Bond # 0189788

Any singular reference to Contractor, Surety, Owner or other party shall be considered plural where applicable.

CONTRACTOR (Name and Address):

All Webbs Enterprises, Inc.
309 Commerce Way
Jupiter, Florida 33458
(561)746-2079

SURETY (Name and Principal Place of Business):

Berkley Insurance Company
412 Mount Kemble Avenue, Suite 310N
Morristown, New Jersey 07960
(800) 331-3379

OWNER (Name and Address):

The City of Lake Worth, Florida
7 North Dixie Highway
Lake Worth, Florida 33460
(561)586-1710

CONSTRUCTION CONTRACT
Date:
Amount: **$291,665.00 Two Hundred Ninety-One Thousand, Six Hundred Sixty-Five and No/100**
Description (Name and Location): **Ref. No. B4015.00, Lake Worth - Potable Well No. 12 Reconstruction, Lake Worth, Florida**

BOND
Date (Not earlier than Construction Contract Date):
Amount: **$291,665.00 Two Hundred Ninety-One Thousand, Six Hundred Sixty-Five and No/100**
Modifications to this Bond Form:

See Below

CONTRACTOR AS PRINCIPAL
Company: **All Webbs Enterprises, Inc.** (Corp. Seal)
Signature: _____
Name and Title: Dwight Webb Jr (VP)

SURETY
Company: **Berkley Insurance Company** (Corp. Seal)
Signature: _____
Name and Title: **Joseph D. Johnson, Jr.**
Attorney-in-Fact
Florida Resident Agent

CONTRACTOR AS PRINCIPAL
Company: (Corp. Seal)
Signature: _____
Name and Title:

SURETY
Company: (Corp. Seal)
Signature: _____
Name and Title:

EJCDC No. 1910-28A (1984 Edition)
Prepared through the joint efforts of The Surety Association of America, Engineers' Joint Contract Documents Committee, The Associated General Contractors of America, and the American Institute of Architects.

1. The Contractor and the Surety, jointly and severally, bind themselves, their heirs, executors, administrators, successors and assigns to the Owner for the performance of the Construction Contract, which is incorporated herein by reference.

2. If the Contractor performs the Construction Contract, the Surety and the Contractor shall have no obligation under this Bond, except to participate in conferences as provided in Subparagraph 3.1.

3. If there is no Owner Default, the Surety's obligation under this Bond shall arise after:

3.1. The Owner has notified the Contractor and the Surety at its address described in Paragraph 10 below, that the Owner is considering declaring a Contractor Default and has requested and attempted to arrange a conference with the Contractor and the Surety to be held not later than fifteen days after receipt of such notice to discuss methods of performing the Construction Contract. If the Owner, the Contractor and the Surety agree, the Contractor shall be allowed a reasonable time to perform the Construction Contract, but such an agreement shall not waive the Owner's right, if any, subsequently to declare a Contractor Default; and

3.2. The Owner has declared a Contractor Default and formally terminated the Contractor's right to complete the contract. Such Contractor Default shall not be declared earlier than twenty days after the Contractor and the Surety have received notice as provided in Subparagraph 3.1; and

3.3. The Owner has agreed to pay the Balance of the Contract Price to the Surety in accordance with the terms of the Construction Contract or to a contractor selected to perform the Construction Contract in accordance with the terms of the contract with the Owner.

4. When the Owner has satisfied the conditions of Paragraph 3, the Surety shall promptly and at the Surety's expense take one of the following actions:

4.1. Arrange for the Contractor, with consent of the Owner, to perform and complete the Construction Contract; or

4.2. Undertake to perform and complete the Construction Contract itself, through its agents or through independent contractors; or

4.3. Obtain bids or negotiated proposals from qualified contractors acceptable to the Owner for a contract for performance and completion of the Construction Contract, arrange for a contract to be prepared for execution by the Owner and the contractor selected with the Owner's concurrence, to be secured with performance and payment bonds executed by a qualified surety equivalent to the bonds issued on the Construction Contract, and pay to the Owner the amount of damages as described in Paragraph 6 in excess of the Balance of the Contract Price incurred by the Owner resulting from the Contractor's default; or

4.4. Waive its right to perform and complete, arrange for completion, or obtain a new contractor and with reasonable promptness under the circumstances:

1. After investigation, determine the amount for which it may be liable to the Owner and, as soon as practicable after the amount is determined, tender payment therefor to the Owner; or
2. Deny liability in whole or in part and notify the Owner citing reasons therefor.

5. If the Surety does not proceed as provided in Paragraph 4 with reasonable promptness, the Surety shall be deemed to be in default on this Bond fifteen days after receipt of an additional written notice from the Owner to the Surety demanding that the Surety perform its obligations under this Bond, and the Owner shall be entitled to enforce any remedy available to the Owner. If the Surety proceeds as provided in Subparagraph 4.4, and the Owner refuses the payment tendered or the Surety has denied liability, in whole or in part, without further notice the Owner shall be entitled to enforce any remedy available to the Owner.

6. After the Owner has terminated the Contractor's right to complete the Construction Contract, and if the Surety elects to act under Subparagraph 4.1, 4.2, or 4.3 above, then the responsibilities of the Surety to the Owner shall not be greater than those of the Contractor under the Construction Contract, and the responsibilities of the Owner to the Surety shall not be greater than those of the Owner under the Construction Contract. To the limit of the amount of this Bond, but subject to commitment by the Owner of the Balance of the Contract Price to mitigation of costs and damages on the Construction Contract, the Surety is obligated without duplication for:

6.1. The responsibilities of the Contractor for correction of defective work and completion of the Construction Contract;

6.2. Additional legal including appellate proceedings design professional and delay costs and expenses resulting from the Contractor's default, and *

6.3. Liquidated damages, or if no liquidated damages are specified in the Construction Contract, actual damages caused by delayed performance or non-performance of the Contractor.

7. The Surety shall not be liable to the Owner or others for obligations of the Contractor that are unrelated to the Construction Contract, and the Balance of the Contract Price shall not be reduced or set off on account of any such unrelated obligations. No right of action shall accrue on this Bond to any person or entity other than the Owner or its heirs, executors, administrators, or successors.

8. The Surety hereby waives notice of any change, including changes of time, to the Construction Contract or to related subcontracts, purchase orders and other obligations.

9. Any proceeding, legal or equitable, under this Bond may be instituted in any court of competent jurisdiction in the location in which the work or part of the work is located and shall be instituted within two years after Contractor Default or within two years after the Contractor ceased working or within two years after the Surety refuses or fails to perform its obligations under this Bond, whichever occurs first. If the provisions of this Paragraph are void or prohibited by law, the minimum period of limitation available to sureties as a defense in the jurisdiction of the suit shall be applicable.

10. Notice to the Surety, the Owner or the Contractor shall be mailed or delivered to the address shown on the signature page.

11. When this Bond has been furnished to comply with a statutory or other legal requirement in the location where the construction was to be performed, any provision in this Bond conflicting with said statutory or legal requirement shall be deemed deleted herefrom and provisions conforming to such statutory or other legal requirement shall be deemed incorporated herein. The intent is that this Bond shall be construed as a statutory bond and not as a common law bond.

12. Definitions.

12.1. Balance of the Contract Price: The total amount payable by the Owner to the Contractor under the Construction Contract after all proper adjustments have been made, including allowance to the Contractor of any amounts received or to be received by the Owner in settlement of insurance or other claims for damages to which the Contractor is entitled, reduced by all valid and proper payments made to or on behalf of the Contractor under the Construction Contract.

12.2. Construction Contract: The agreement between the Owner and the Contractor identified on the signature page, including all Contract Documents and changes thereto.

12.3. Contractor Default: Failure of the Contractor, which has neither been remedied nor waived, to perform or otherwise to comply with the terms of the Construction Contract.

12.4. Owner Default: Failure of the Owner, which has neither been remedied nor waived, to pay the Contractor as required by the Construction Contract or to perform and complete or comply with the other terms thereof.

* resulting from the actions or failure to act of the Surety under Paragraph 4; and

This Bond is executed pursuant to Florida Statutes Section 255.05 or Section 713.23, whichever is applicable, and is subject to the notice and time limitation provisions.

(FOR INFORMATION ONLY—Name, Address and Telephone)

AGENT or BROKER:
Johnson & Company
801 N. Orange Ave., Suite 510
Orlando, Florida 32801
(407) 843-1120

OWNER'S REPRESENTATIVE (~~Architect~~ Engineer ~~or other~~):
Mock, Roos & Associates, Inc.
5720 Corporate Way
West Palm Beach, FL 33407

No. BI-10099a

POWER OF ATTORNEY
BERKLEY INSURANCE COMPANY
WILMINGTON, DELAWARE

NOTICE: The warning found elsewhere in this Power of Attorney affects the validity thereof. Please review carefully.

KNOW ALL MEN BY THESE PRESENTS, that BERKLEY INSURANCE COMPANY (the "Company"), a corporation duly organized and existing under the laws of the State of Delaware, having its principal office in Greenwich, CT, has made, constituted and appointed, and does by these presents make, constitute and appoint: ***Joseph D. Johnson, Jr.; Brett A. Ragland; Francis T. O'Reardon; Joseph D. Johnson, III; JoAnn H. Bebout; Diedre A. Sullivan or John Scott Harris of Joseph D. Johnson & Company of Orlando, FL*** its true and lawful Attorney-in-Fact, to sign its name as surety only as delineated below and to execute, seal, acknowledge and deliver any and all bonds and undertakings, with the exception of Financial Guaranty Insurance, providing that no single obligation shall exceed **Fifty Million and 00/100 U.S. Dollars (U.S.$50,000,000.00),** to the same extent as if such bonds had been duly executed and acknowledged by the regularly elected officers of the Company at its principal office in their own proper persons.

This Power of Attorney shall be construed and enforced in accordance with, and governed by, the laws of the State of Delaware, without giving effect to the principles of conflicts of laws thereof. This Power of Attorney is granted pursuant to the following resolutions which were duly and validly adopted at a meeting of the Board of Directors of the Company held on January 25, 2010:

RESOLVED, that, with respect to the Surety business written by Berkley Surety Group, the Chairman of the Board, Chief Executive Officer, President or any Vice President of the Company, in conjunction with the Secretary or any Assistant Secretary are hereby authorized to execute powers of attorney authorizing and qualifying the attorney-in-fact named therein to execute bonds, undertakings, recognizances, or other suretyship obligations on behalf of the Company, and to affix the corporate seal of the Company to powers of attorney executed pursuant hereto; and said officers may remove any such attorney-in-fact and revoke any power of attorney previously granted; and further

RESOLVED, that such power of attorney limits the acts of those named therein to the bonds, undertakings, recognizances, or other suretyship obligations specifically named therein, and they have no authority to bind the Company except in the manner and to the extent therein stated; and further

RESOLVED, that such power of attorney revokes all previous powers issued on behalf of the attorney-in-fact named; and further

RESOLVED, that the signature of any authorized officer and the seal of the Company may be affixed by facsimile to any power of attorney or certification thereof authorizing the execution and delivery of any bond, undertaking, recognizance, or other suretyship obligation of the Company; and such signature and seal when so used shall have the same force and effect as though manually affixed. The Company may continue to use for the purposes herein stated the facsimile signature of any person or persons who shall have been such officer or officers of the Company, notwithstanding the fact that they may have ceased to be such at the time when such instruments shall be issued.

IN WITNESS WHEREOF, the Company has caused these presents to be signed and attested by its appropriate officers and its corporate seal hereunto affixed this 14 day of January, 2014.

Attest:

(Seal) By _____
Ira S. Lederman
Senior Vice President & Secretary

Berkley Insurance Company

By _____
Jeffrey M. Hafter
Senior Vice President

WARNING: THIS POWER INVALID IF NOT PRINTED ON BLUE "BERKLEY" SECURITY PAPER.

STATE OF CONNECTICUT)
) ss:
COUNTY OF FAIRFIELD)

Sworn to before me, a Notary Public in the State of Connecticut, this 14 day of January, 2014, by Ira S. Lederman and Jeffrey M. Hafter who are sworn to me to be the Senior Vice President and Secretary, and the Senior Vice President, respectively, of Berkley Insurance Company.

_____
Notary Public, State of Connecticut

KATHLEEN COREY
NOTARY PUBLIC
CONNECTICUT
MY COMMISSION EXPIRES OCTOBER 31, 2017

CERTIFICATE

I, the undersigned, Assistant Secretary of BERKLEY INSURANCE COMPANY, DO HEREBY CERTIFY that the foregoing is a true, correct and complete copy of the original Power of Attorney; that said Power of Attorney has not been revoked or rescinded and that the authority of the Attorney-in-Fact set forth therein, who executed the bond or undertaking to which this Power of Attorney is attached, is in full force and effect as of this date.

Given under my hand and seal of the Company, this _____ day of _____, _____.

(Seal)

_____
Andrew M. Tuma

the certification seal at the bottom is embossed. The background imprint, warning and confirmation (on reverse) must be in blue ink.

Instructions for Inquiries and Notices Under the Bond Attached to This Power

Berkley Surety Group is the affiliated underwriting manager for the surety business of: Acadia Insurance Company, Berkley Insurance Company, Berkley Regional Insurance Company, Carolina Casualty Insurance Company, Union Standard Insurance Company, Continental Western Insurance Company, and Union Insurance Company.

To verify the authenticity of the bond, please call (866) 768-3534 or email BSGInquiry@berkleysurety.com

---

Any written notices, inquiries, claims or demands to the surety on the bond to which this Rider is attached should be directed to:

Berkley Surety Group
412 Mount Kemble Avenue
Suite 310N
Morristown, NJ 07960
Attention: Surety Claims Department

Or

email BSGClaim@berkleysurety.com

Please include with all notices the bond number and the name of the principal on the bond. Where a claim is being asserted, please set forth generally the basis of the claim. In the case of a payment or performance bond, please identify the project to which the bond pertains.

00620

Construction Payment Bond

Bond # 0189788

Any singular reference to Contractor, Surety, Owner or other party shall be considered plural where applicable.

CONTRACTOR (Name and Address):

All Webbs Enterprises, Inc.
309 Commerce Way
Jupiter, Florida 33458
(561) 746-2079

SURETY (Name and Principal Place of Business):

Berkley Insurance Company
412 Mount Kemble Avenue, Suite 310 N
Morristown, New Jersey 07960
(800) 331-3379

OWNER (Name and Address):

The City of Lake Worth, Florida
7 North Dixie Highway
Lake Worth, Florida 33460
(561) 586-1710

CONSTRUCTION CONTRACT
Date:
Amount: $291,665.00 Two Hundred Ninety-One Thousand, Six Hundred Sixty-Five Dollars and No/100
Description (Name and Location): Ref. No. B4015.00, Lake Worth - Potable Well No. 12 Reconstruction, Lake Worth, Florida

BOND
Date (Not earlier than Construction Contract Date):
Amount: $291,665.00 Two Hundred Ninety-One Thousand, Six Hundred Sixty-Five Dollars and No/100
Modifications to this Bond Form:

See Below

CONTRACTOR AS PRINCIPAL
Company: All Webbs Enterprises, Inc. (Corp. Seal)
Signature: _____
Name and Title: David Webb Jr (VP)

SURETY
Company: Berkley Insurance Company (Corp. Seal)
Signature: _____
Name and Title: Joseph D. Johnson, Jr.
Attorney-in-Fact
Florida Resident Agent

CONTRACTOR AS PRINCIPAL
Company: (Corp. Seal)
Signature: _____
Name and Title:

SURETY
Company: (Corp. Seal)
Signature: _____
Name and Title:

(CDC No. 1910-28B (1984 Edition)
Prepared through the joint efforts of the Surety Association of America, Engineers' Joint Contract Documents Committee, The Associated General Contractors of America, American Institute of Architects, American Subcontractors Association, and the Associated Specialty Contractors.

1. The Contractor and the Surety, jointly and severally, bind themselves, their heirs, executors, administrators, successors and assigns to the Owner to pay for labor, materials and equipment furnished for use in the performance of the Construction Contract, which is incorporated herein by reference.

2. With respect to the Owner, this obligation shall be null and void if the Contractor:

2.1. Promptly makes payment, directly or indirectly, for all sums due Claimants, and

2.2. Defends, indemnifies and holds harmless the Owner from all claims, demands, liens or suits by any person or entity who furnished labor, materials or equipment for use in the performance of the Construction Contract, provided the Owner has promptly notified the Contractor and the Surety (at the address described in Paragraph 12) of any claims, demands, liens or suits and tendered defense of such claims, demands, liens or suits to the Contractor and the Surety, and provided there is no Owner Default.

3. With respect to Claimants, this obligation shall be null and void if the Contractor promptly makes payment, directly or indirectly, for all sums due.

4. The Surety shall have no obligation to Claimants under this Bond until:

4.1. Claimants who are employed by or have a direct contract with the Contractor have given notice to the Surety (at the address described in Paragraph 12) and sent a copy, or notice thereof, to the Owner, stating that a claim is being made under this Bond and, with substantial accuracy, the amount of the claim. (see Note 1)

4.2. Claimants who do not have a direct contract with the Contractor:

1. Have furnished written notice to the Contractor and sent a copy, or notice thereof, to the Owner, within 90 days after having last performed labor or last furnished materials or equipment included in the claim stating, with substantial accuracy, the amount of the claim and the name of the party to whom the materials were furnished or supplied or for whom the labor was done or performed; and

2. Have either received a rejection in whole or in part from the Contractor, or not received within 30 days of furnishing the above notice any communication from the Contractor by which the Contractor has indicated the claim will be paid directly or indirectly; and

3. Not having been paid within the above 30 days, have sent a written notice to the Surety (at the address described in Paragraph 12) and sent a copy, or notice thereof, to the Owner, stating that a claim is being made under this Bond and enclosing a copy of the previous written notice furnished to the Contractor.

5. If a notice required by Paragraph 4 is given by the Owner to the Contractor or to the Surety, that is sufficient compliance.

6. When the Claimant has satisfied the conditions of Paragraph 4, the Surety shall promptly and at the Surety's expense take the following actions:

6.1. Send an answer to the Claimant, with a copy to the Owner, within 45 days after receipt of the claim, stating the amounts that are undisputed and the basis for challenging any amounts that are disputed.

6.2. Pay or arrange for payment of any undisputed amounts.

7. The Surety's total obligation shall not exceed the amount of this Bond, and the amount of this Bond shall be credited for any payments made in good faith by the Surety.

8. Amounts owed by the Owner to the Contractor under the Construction Contract shall be used for the performance of the Construction Contract and to satisfy claims, if any, under any Construction Performance Bon By the Contractor furnishing and the Owner accepting this Bond, they agree that all funds earned by the Contractor in the performance of the Construction Contract are dedicated to satisfy obligations of the Co tractor and the Surety under this Bond, subject to the Owner's priori to use the funds for the completion of the work.

9. The Surety shall not be liable to the Owner, Claimants or others for obligations of the Contractor that are unrelated to the Construction Co tract. The Owner shall not be liable for payment of any costs or expens of any Claimant under this Bond, and shall have under this Bond n obligations to make payments to, give notices on behalf of, or otherwise have obligations to Claimants under this Bond.

10. The Surety hereby waives notice of any change, including changes time, to the Construction Contract or to related subcontracts, purcha orders and other obligations.

11. No suit or action shall be commenced by a Claimant under this Bon other than in a court of competent jurisdiction in the location in which t work or part of the work is located or after the expiration of 2 yea from the date (1) on which the Claimant gave the notice required by Subparagraph 4.1 or Clause 4.2 (iii), or (2) on which the last labor or service was performed by anyone or the last materials or equipment we furnished by anyone under the Construction Contract, whichever of (or (2) first occurs. If the provisions of this Paragraph are void or prohibite by law, the minimum period of limitation available to sureties as a defense in the jurisdiction of the suit shall be applicable.

12. Notice to the Surety, the Owner or the Contractor shall be mailed delivered to the address shown on the signature page. Actual receipt notice by Surety, the Owner or the Contractor, however accomplished, shall be sufficient compliance as of the date received at the address shown on the signature page.

13. When this Bond has been furnished to comply with a statutory other legal requirement in the location where the construction was to be performed, any provision in this Bond conflicting with said statutory or legal requirement shall be deemed deleted herefrom and provisions co forming to such statutory or other legal requirement shall be deem incorporated herein. The intent is, that this Bond shall be construed as a statutory bond and not as a common law bond.

14. Upon request by any person or entity appearing to be a potenti beneficiary of this Bond, the Contractor shall promptly furnish a copy this Bond or shall permit a copy to be made.

15. DEFINITIONS

15.1. Claimant: An individual or entity having a direct contract wi the Contractor or with a subcontractor of the Contractor furnish labor, materials or equipment for use in the performance of the Contract. The intent of this Bond shall be to include without limitation in the terms "labor, materials or equipment" that part of water, gas, power, light, heat, oil, gasoline, telephone servi or rental equipment used in the Construction Contract, archite tural and engineering services required for performance of the work of the Contractor and the Contractor's subcontractors, and all other items for which a mechanic's lien may be asserted the jurisdiction where the labor, materials or equipment we furnished.

15.2. Construction Contract: The agreement between the Owner and the Contractor identified on the signature page, including all Contract Documents and changes thereto.

15.3. Owner Default: Failure of the Owner, which has neither be remedied nor waived, to pay the Contractor as required by the Construction Contract or to perform and complete or comply with the other terms thereof.

Note 1: As an additional requirement any claimant, except a laborer, who is not in privity with the Contractor ~~and who has not received payment for his labor, materials or supplies~~ shall, within forty-five days after beginning to furnish labor, materials or supplies, furnish the Contractor with a Notice that he intends to look to the Bond for protection.

This Bond is executed pursuant to Florida Statutes Section 255.05 or Section 713.23, whichever is applicable, and is subject to the notice and time limitation provisions.

(FOR INFORMATION ONLY—Name, Address and Telephone)

AGENT or BROKER:	OWNER'S REPRESENTATIVE (Architect, Engineer or other party):
Johnson & Company	Mock, Roos & Associates, Inc.
801 N. Orange Avenue, Suite 510	5720 Corporate Way
Orlando, Florida 32801	West Palm Beach, FL 33407
(407) 843-1120	

No. BI-10099a

POWER OF ATTORNEY
BERKLEY INSURANCE COMPANY
WILMINGTON, DELAWARE

NOTICE: The warning found elsewhere in this Power of Attorney affects the validity thereof. Please review carefully.

KNOW ALL MEN BY THESE PRESENTS, that BERKLEY INSURANCE COMPANY (the "Company"), a corporation duly organized and existing under the laws of the State of Delaware, having its principal office in Greenwich, CT, has made, constituted and appointed, and does by these presents make, constitute and appoint: ***Joseph D. Johnson, Jr.; Brett A. Ragland; Francis T. O'Reardon; Joseph D. Johnson, III; JoAnn H. Bebout; Diedre A. Sullivan or John Scott Harris of Joseph D. Johnson & Company of Orlando, FL*** its true and lawful Attorney-in-Fact, to sign its name as surety only as delineated below and to execute, seal, acknowledge and deliver any and all bonds and undertakings, with the exception of Financial Guaranty Insurance, providing that no single obligation shall exceed **Fifty Million and 00/100 U.S. Dollars (U.S.$50,000,000.00),** to the same extent as if such bonds had been duly executed and acknowledged by the regularly elected officers of the Company at its principal office in their own proper persons.

This Power of Attorney shall be construed and enforced in accordance with, and governed by, the laws of the State of Delaware, without giving effect to the principles of conflicts of laws thereof. This Power of Attorney is granted pursuant to the following resolutions which were duly and validly adopted at a meeting of the Board of Directors of the Company held on January 25, 2010:

RESOLVED, that, with respect to the Surety business written by Berkley Surety Group, the Chairman of the Board, Chief Executive Officer, President or any Vice President of the Company, in conjunction with the Secretary or any Assistant Secretary are hereby authorized to execute powers of attorney authorizing and qualifying the attorney-in-fact named therein to execute bonds, undertakings, recognizances, or other suretyship obligations on behalf of the Company, and to affix the corporate seal of the Company to powers of attorney executed pursuant hereto; and said officers may remove any such attorney-in-fact and revoke any power of attorney previously granted; and further

RESOLVED, that such power of attorney limits the acts of those named therein to the bonds, undertakings, recognizances, or other suretyship obligations specifically named therein, and they have no authority to bind the Company except in the manner and to the extent therein stated; and further

RESOLVED, that such power of attorney revokes all previous powers issued on behalf of the attorney-in-fact named; and further

RESOLVED, that the signature of any authorized officer and the seal of the Company may be affixed by facsimile to any power of attorney or certification thereof authorizing the execution and delivery of any bond, undertaking, recognizance, or other suretyship obligation of the Company; and such signature and seal when so used shall have the same force and effect as though manually affixed. The Company may continue to use for the purposes herein stated the facsimile signature of any person or persons who shall have been such officer or officers of the Company, notwithstanding the fact that they may have ceased to be such at the time when such instruments shall be issued.

IN WITNESS WHEREOF, the Company has caused these presents to be signed and attested by its appropriate officers and its corporate seal hereunto affixed this 14 day of January, 2014.

Attest: Berkley Insurance Company

(Seal) By _____ By _____
Ira S. Lederman — Senior Vice President & Secretary
Jeffrey M. Hafter — Senior Vice President

WARNING: THIS POWER INVALID IF NOT PRINTED ON BLUE "BERKLEY" SECURITY PAPER.

STATE OF CONNECTICUT)
) ss:
COUNTY OF FAIRFIELD)

Sworn to before me, a Notary Public in the State of Connecticut, this 14 day of January, 2014, by Ira S. Lederman and Jeffrey M. Hafter who are sworn to me to be the Senior Vice President and Secretary, and the Senior Vice President, respectively, of Berkley Insurance Company.

Notary Public, State of Connecticut

KATHLEEN COREY
NOTARY PUBLIC
CONNECTICUT
MY COMMISSION EXPIRES OCTOBER 31, 2017

CERTIFICATE

I, the undersigned, Assistant Secretary of BERKLEY INSURANCE COMPANY, DO HEREBY CERTIFY that the foregoing is a true, correct and complete copy of the original Power of Attorney; that said Power of Attorney has not been revoked or rescinded and that the authority of the Attorney-in-Fact set forth therein, who executed the bond or undertaking to which this Power of Attorney is attached, is in full force and effect as of this date.

Given under my hand and seal of the Company, this _____ day of _____, _____.

(Seal)

_____
Andrew M. Tuma

the certification seal at the bottom is embossed. The background imprint, warning and confirmation (on reverse) must be in blue ink.

Instructions for Inquiries and Notices Under the Bond Attached to This Power

Berkley Surety Group is the affiliated underwriting manager for the surety business of: Acadia Insurance Company, Berkley Insurance Company, Berkley Regional Insurance Company, Carolina Casualty Insurance Company, Union Standard Insurance Company, Continental Western Insurance Company, and Union Insurance Company.

To verify the authenticity of the bond, please call (866) 768-3534 or email BSGInquiry@berkleysurety.com

---

Any written notices, inquiries, claims or demands to the surety on the bond to which this Rider is attached should be directed to:

Berkley Surety Group
412 Mount Kemble Avenue
Suite 310N
Morristown, NJ 07960
Attention: Surety Claims Department

Or

email BSGClaim@berkleysurety.com

Please include with all notices the bond number and the name of the principal on the bond. Where a claim is being asserted, please set forth generally the basis of the claim. In the case of a payment or performance bond, please identify the project to which the bond pertains.

PROJECT: Potable Well No. 12 Reconstruction
for City of Lake Worth, FL
Lake Worth Solicitation No. IFB-15-101

SECTION 00630
NOTICE OF COMPLIANCE WITH CHAPTER 556, FLORIDA STATUTES

The undersigned Contractor does hereby confirm to the Owner and Engineer that the Contractor has reviewed the provisions of Chapter 556, Florida Statutes, and has provided to "Sunshine State One-Call of Florida, Inc." the information required under F.S. 556.105 before the commencement of any excavation or demolition required for the Work.

Executed this _____ day of _____, 20____.

All Webb's Enterprises
(name of Contractor)

(signature)

David Webb Jr
(print name)

Vice President
(title)

END OF SECTION

00670

CONTRACTOR'S AFFIDAVIT TO OWNER

STATE OF FLORIDA
COUNTY OF _____

Before me, the undersigned authority, authorized to administer oaths and take acknowledgements, personally appeared _____, who, being by me first duly sworn, on oath depose(s) and say(s):

(1) He/she is/They are a (Corporation, Partnership or Individual) of _____(State), doing business as _____(Company Name), hereinafter called "Contractor".

(2) Contractor heretofore entered into a Contract with _____ hereinafter called "Owner" to do Work (furnish material, labor and services) for the construction of _____, located at _____County, Florida. ".

(3) Contractor has fully completed construction in accordance with the terms of the Contract, and all lienors have been paid in full, except:

NAME OF LIENOR	AMOUNT DUE AND UNPAID
	$

(4) All Workmen's Compensation claims have been settled and no liability claims are pending, in connection with, arising out of or resulting from the Contract.

(5) Receipt by the Contractor of the final payment, under the aforementioned Contract, shall constitute a full release and discharge by the Contractor to the Owner of any and all claims of the Contractor against the Owner, arising out of, connected with, or resulting from performance of the obligations of the Contractor pursuant to the Contract Documents.

(6) The term "lienor" as used in this affidavit means any person having a lien or a prospective lien, under the Mechanics Lien Law of Florida, on the land and property of the Owner referred to in paragraph (2) of this affidavit..

(7) This affidavit is given pursuant to the provisions of Florida Statutes Section 713.06 or Section 255.05, whichever is applicable.
Signed and sealed in the presence of:

_____ (ENTITY)

_____ (SEAL)

_____

By:_____

Subscribed and Sworn to (or affirmed) before me on _____(date) by _____ _____(name). He/she is personally known to me or has presented _____(type of identification) as identification.

_____ Notary Public Signature and Seal

_____ Print Notary Name and Commission No.

00680

APPLICATION FOR PAYMENT NO. _____

Project ____ Potable Well No. 12 Reconstruction for City of Lake Worth

Application is made for payment, as hereinafter shown, in connection with this Agreement:

Total Work to Date - see attached schedule	$ _____
Total Material Suitably Stored - see attached schedule	$ _____
Gross Amount Due	$ _____
Less _____ % Retainage	$ _____
Amount Due to Date	$ _____
Less Previous Applications	$ _____
Amount Due This Application	$ _____

Original Contract Price	$ _____
Net Change Orders	$ _____
Current Contract Price	$ _____
Value of Work Remaining to be Done	$ _____

Contractor's Certification:

The undersigned Contractor certifies that (1) all previous progress payments received from Owner on account of Work done under the Agreement referred to above have been applied to discharge in full all obligations of Contractor incurred in connection with Work covered by prior Applications for Payment numbered 1 through _____, inclusive; and (2) title to all materials and equipment incorporated in said Work or otherwise listed in or covered by this Application for Payment will pass to Owner at time of payment free and clear of all liens, claims, security interests and encumbrances (except such as covered by Bond acceptable to Owner).

Dated _____, 20____

_____
Contractor and Mailing Address

By _____
(Name and Title)

State of)
County of)ss

Subscribed and Sworn to (or affirmed) before me on _____ *(date)*
personally appeared _____ *(name)*.
He/she is personally known to me or has presented _____
_____ *(type of identification)* as identification. Who being so duly sworn, did depose and say that he/she is _____ of the Contractor above mentioned; that he/she executed the above Application for Payment and statement on behalf of said Contractor; and that all of the statements contained therein are true, correct and complete.

_____
Notary Public Signature and Seal

_____
Print Notary Name and Commission No.

Payment of the above AMOUNT DUE THIS APPLICATION is recommended.

MOCK, ROOS & ASSOCIATES, INC.

Date: _____

By: _____
(Name)

(Title)

00681

SCHEDULE OF VALUES AND WORK COMPLETED

PROJECT TITLE_____

_____

CONTRACTOR _____

FOR PERIOD ENDING _____

TO ACCOMPANY APPLICATION NO. _____

ITEM	CONTRACTOR'S Schedule of Values			Work Completed	
	Unit Price	Quantity	Amount	Quantity	Amount
	$		$		$
NOTE: CONTRACTOR SHALL PREPARE APPROPRIATE SCHEDULE WITH ALL CONTRACT ITEMS					
SHOWN FOR ATTACHMENT TO EACH APPLICATION FOR PAYMENT.					
			Total (Original Contract)		$ _____
C.O. No. 1					
C.O. No. 1 NOTE: CHANGE ORDER(S) SHALL BE ITEMIZED AS APPLICABLE.					

TOTAL WORK TO DATE $_____

MATERIALS SUITABLY STORED

NOTE: CONTRACTOR TO ITEMIZE AND ATTACH APPROPRIATE INVOICES

TOTAL MATERIAL SUITABLY STORED $_____

Accompanying Documentation (Contractor to itemize):

This document has important legal consequences: consultation with an attorney is encouraged with respect to its completion or modification.

05/02/86
GC-1

00700

STANDARD

GENERAL CONDITIONS

OF THE

CONSTRUCTION CONTRACT

Prepared by

Engineers' Joint Contract Documents Committee

and

Issued and Published Jointly By

PROFESSIONAL ENGINEERS IN PRIVATE PRACTICE
A practice division of the
NATIONAL SOCIETY OF PROFESSIONAL ENGINEERS

AMERICAN CONSULTING ENGINEERS COUNCIL

AMERICAN SOCIETY OF CIVIL ENGINEERS

CONSTRUCTION SPECIFICATIONS INSTITUTE

This document has been approved and endorsed by

The Associated General Contractors of America

These General Conditions have been prepared for use with the Owner-Contractor Agreements (No. 1910-8-A-1 or 1910-8-A-2, 1983 editions). Their provisions are interrelated and a change in one may necessitate a change in the others. Comments concerning their usage are contained in the Commentary on Agreements for Engineering Services and Contract Documents, No. 1910-9, 1981 edition. For guidance in the preparation of Supplementary Conditions, see Guide to the Preparation of Supplementary Conditions (No. 1910-17, 1983 edition). When bidding is involved, the Standard Form of Instructions to Bidders (No. 1910-12, 1983 edition) may be used.

No. 1910-8 (1983 Edition)
Reprinted 8/85

©1983 National Society of Professional Engineers
2029 K Street, N.W., Washington, D.C. 20006

American Consulting Engineers Council
1015 15th Street, N.W., Washington, D.C. 20005

American Society of Civil Engineers
345 East 47th Street, New York, NY 10017

Construction Specifications Institute
601 Madison St., Alexandria, VA 22314

TABLE OF CONTENTS OF GENERAL CONDITIONS

Article Number	*Title*	*Page*
1	DEFINITIONS	7
2	PRELIMINARY MATTERS	8
3	CONTRACT DOCUMENTS: INTENT, AMENDING AND REUSE	9
4	AVAILABILITY OF LANDS; PHYSICAL CONDITIONS; REFERENCE POINTS	10
5	BONDS AND INSURANCE	11
6	CONTRACTOR'S RESPONSIBILITIES	14
7	OTHER WORK	18
8	OWNER'S RESPONSIBILITIES	19
9	ENGINEER'S STATUS DURING CONSTRUCTION	19
10	CHANGES IN THE WORK	21
11	CHANGE OF CONTRACT PRICE	21
12	CHANGE OF CONTRACT TIME	24
13	WARRANTY AND GUARANTEE; TESTS AND INSPECTIONS; CORRECTION, REMOVAL OR ACCEPTANCE OF DEFECTIVE WORK	24
14	PAYMENTS TO CONTRACTOR AND COMPLETION	26
15	SUSPENSION OF WORK AND TERMINATION	29
16	ARBITRATION	31
17	MISCELLANEOUS	32

INDEX TO GENERAL CONDITIONS

Article or Paragraph Number

Acceptance of Insurance 5.13
Access to the Work 13.2
Addenda—definition of (see definition of Specifications) 1
Agreement—definition of 1
All Risk Insurance 5.6
Amendment, Written 1, 3.1.1
Application for Payment—definition of 1
Application for Payment, Final 14.12
Application for Progress Payment 14.2
Application for Progress Payment—review of 14.4-14.7
Arbitration 16
Authorized Variation in Work 9.5
Availability of Lands 4.1
Award, Notice of—defined 1

Before Starting Construction 2.5-2.7
Bid—definition of 1
Bonds and Insurance—in general 5
Bonds—definition of 1
Bonds, Delivery of 2.1, 5.1
Bonds, Performance and Other 5.1-5.2

Cash Allowances 11.8
Change Order—definition of 1
Change Orders—to be executed 10.4
Changes in the Work 10
Claims, Waiver of—on Final Payment 14.16
Clarifications and Interpretations 9.4
Cleaning 6.17
Completion 14
Completion, Substantial 14.8-14.9
Conference, Preconstruction 2.8
Conflict, Error, Discrepancy—Contractor to Report 2.5, 3.3
Construction Machinery, Equipment, etc. 6.4
Continuing Work 6.29
Contract Documents—amending and supplementing 3.4-3.5
Contract Documents—definition of 1
Contract Documents—Intent 3.1-3.3
Contract Documents—Reuse of 3.6
Contract Price, Change of 11
Contract Price—definition 1
Contract Time, Change of 12
Contract Time, Commencement of 2.3
Contract Time—definition of 1
Contractor—definition of 1
Contractor May Stop Work or Terminate 15.5
Contractor's Continuing Obligation 14.15
Contractor's Duty to Report Discrepancy in Documents 2.5, 3.2
Contractor's Fee—Cost Plus ... 11.4.5.6, 11.5.1, 11.6-11.7
Contractor's Liability Insurance 5.3
Contractor's Responsibilities—in general 6
Contractor's Warranty of Title 14.3
Contractors—other 7
Contractual Liability Insurance 5.4
Coordinating Contractor—definition of 7.4
Coordination 7.4
Copies of Documents 2.2
Correction or Removal of Defective Work 13.11
Correction Period, One Year 13.12
Correction, Removal or Acceptance of Defective Work—in general 13.11-13.14
Cost—net decrease 11.6.2
Cost of Work 11.4-11.5
Costs, Supplemental 11.4.5

Day—definition of 1
Defective—definition of 1
Defective Work, Acceptance of 13.13
Defective Work, Correction or Removal of 13.11
Defective Work—in general 13, 14.7, 14.11
Defective Work, Rejecting 9.6
Definitions 1
Delivery of Bonds 2.1
Determination for Unit Prices 9.10
Disputes, Decisions by Engineer 9.11-9.12
Documents, Copies of 2.2
Documents, Record 6.19
Documents, Reuse 3.6
Drawings—definition of 1

Easements 4.1
Effective date of Agreement—definition of 1
Emergencies 6.22
Engineer—definition of 1
Engineer's Decisions 9.10-9.12
Engineer's—Notice Work is Acceptable 14.13
Engineer's Recommendation of Payment 14.4, 14.13
Engineer's Responsibilities, Limitations on 6.6, 9.11, 9.13-9.16
Engineer's Status During Construction—in general 9
Equipment, Labor, Materials and 6.3-6.6
Equivalent Materials and Equipment 6.7
Explorations of physical conditions 4.2

Fee, Contractor's—Costs Plus 11.6
Field Order—definition of 1
Field Order—issued by Engineer 3.5.1, 9.5
Final Application for Payment 14.12
Final Inspection 14.11
Final Payment and Acceptance 14.13
Final Payment, Recommendation of 14.13-14.14

General Provisions 17.3-17.4
General Requirements—definition of 1
General Requirements—principal references to 2.6, 4.4, 6.4, 6.6-6.7, 6.23

Giving Notice 17.1
Guarantee of Work—by Contractor 13.1

Indemnification 6.30-6.32, 7.5
Inspection, Final 14.11
Inspection, Tests and 13.3
Insurance, Bonds and—in general 5
Insurance, Certificates of 2.7, 5
Insurance—completed operations 5.3
Insurance, Contractor's Liability 5.3
Insurance, Contractual Liability 5.4
Insurance, Owner's Liability 5.5
Insurance, Property 5.6-5.13
Insurance—Waiver of Rights 5.11
Intent of Contract Documents 3.3, 9.14
Interpretations and Clarifications 9.4
Investigations of physical conditions 4.2

Labor, Materials and Equipment 6.3-6.5
Laws and Regulations—definition of 1
Laws and Regulations—general 6.14
Liability Insurance—Contractor's 5.3
Liability Insurance—Owner's 5.5
Liens—definitions of 14.2
Limitations on Engineer's
Responsibilities 6.6, 9.11, 9.13-9.16

Materials and equipment—furnished by Contractor 6.3
Materials and equipment—not
incorporated in Work 14.2
Materials or equipment—equivalent 6.7
Miscellaneous Provisions 17
Multi-prime contracts 7

Notice, Giving of 17.1
Notice of Acceptability of Project 14.13
Notice of Award—definition of 1
Notice to Proceed—definition of 1
Notice to Proceed—giving of 2.3

"Or-Equal" Items 6.7
Other contractors 7
Other work 7
Overtime Work—prohibition of 6.3
Owner—definition of 1
Owner May Correct *Defective* Work 13.14
Owner May Stop Work 13.10
Owner May Suspend Work, Terminate 15.1-15.4
Owner's Duty to Execute Change Orders 11.8
Owner's Liability Insurance 5.5
Owner's Representative—Engineer to serve as 9.1
Owner's Responsibilities—in general 8
Owner's Separate Representative at site 9.3

Partial Utilization 14.10
Partial Utilization—definition of 1
Partial Utilization—Property Insurance 5.15
Patent Fees and Royalties 6.12
Payments, Recommendation of 14.4-14.7, 14.13
Payments to Contractor—in general 14
Payments to Contractor—when due 14.4, 14.13
Payments to Contractor—withholding 14.7
Performance and other Bonds 5.1-5.2
Permits 6.13
Physical Conditions 4.2
Physical Conditions—Engineer's review 4.2.4
Physical Conditions—existing structures 4.2.2
Physical Conditions—explorations and reports 4.2.1
Physical Conditions—possible document change 4.2.5
Physical Conditions—price and time adjustments 4.2.5
Physical Conditions—report of differing 4.2.3
Physical Conditions—Underground Facilities 4.3
Preconstruction Conference 2.8
Preliminary Matters 2
Premises, Use of 6.16-6.18
Price, Change of Contract 11
Price-Contract—definition of 1
Progress Payment, Applications for 14.2
Progress Payment—retainage 14.2
Progress schedule 2.6, 2.9, 6.6, 6.29, 15.2.6
Project—definition of 1
Project Representation—provision for 9.3
Project Representative, Resident—definition of 1
Project, Starting the 2.4
Property Insurance 5.6-5.13
Property Insurance—Partial Utilization 5.15
Property Insurance—Receipt and Application
of Proceeds 5.12-5.13
Protection, Safety and 6.20-6.21
Punch list 14.11

Recommendation of Payment 14.4, 14.13
Record Documents 6.19
Reference Points 4.4
Regulations, Laws and 6.14
Rejecting *Defective* Work 9.6
Related Work at Site 7.1-7.3
Remedies Not Exclusive 17.4
Removal or Correction of *Defective* Work 13.11
Resident Project Representative—definition of 1
Resident Project Representative—provision for 9.3
Responsibilities, Contractor's—in general 6
Responsibilities, Engineer's—in general 9
Responsibilities, Owner's—in general 8
Retainage 14.2
Reuse of Documents 3.5
Rights of Way 4.1
Royalties, Patent Fees and 6.12

Safety and Protection 6.20-6.21
Samples 6.23-6.28
Schedule of progress 2.6, 2.8-2.9, 6.6, 6.29, 15.2.6
Schedule of Shop Drawing
submissions 2.6, 2.8-2.9, 6.23, 14.1
Schedule of values 2.6, 2.8-2.9, 14.1
Schedules, Finalizing 2.9
Shop Drawings and Samples 6.23-6.28
Shop Drawings—definition of 1
Shop Drawings, use to approve
substitutions 6.7.3

Site, Visits to—by Engineer 9.2
Specifications—definition of 1
Starting Construction, Before 2.5-2.8
Starting the Project 2.4
Stopping Work—by Contractor 15.5
Stopping Work—by Owner 13.10
Subcontractor—definition of 1
Subcontractors—in general 6.8-6.11
Subcontracts—required provisions 5.11.1, 6.11
11.4.3
Substantial Completion—certification of 14.8
Substantial Completion—definition of 1
Substitute or "Or-Equal" Items 6.7
Subsurface Conditions 4.2-4.3
Supplemental costs 11.4.5
Supplementary Conditions—definition of 1
Supplementary Conditions—principal
references to .. 2.2, 4.2, 5.1, 5.3, 5.6-5.8, 6.3, 6.13, 6.23,
7.4, 9.3
Supplementing Contract Documents 3.4-3.5
Supplier—definition of 1
Supplier—principal references to ... 3.6, 6.5, 6.7-6.9, 6.20,
6.24, 9.13, 9.16, 11.8, 13.4, 14.12
Surety—consent to payment 14.12, 14.14
Surety—Engineer has no duty to 9.13
Surety—notice to 10.1, 10.5, 15.2
Surety—qualification of 5.1-5.2
Suspending Work, by Owner 15.1
Suspension of Work and Termination—in general 15
Superintendent—Contractor's 6.2
Supervision and Superintendence 6.1-6.2

Taxes—Payment by Contractor 6.15
Termination—by Contractor 15.5
Termination—by Owner 15.2-15.4
Termination, Suspension of Work and—in general 15
Tests and Inspections 13.3-13.7
Time, Change of Contract 12
Time, Computation of 17.2
Time, Contract—definition of 1

Uncovering Work 13.8-13.9
Underground Facilities—definition of 1
Underground Facilities—not shown or indicated 4.3.2
Underground Facilities—protection of 4.3, 6.20
Underground Facilities—shown or indicated 4.3.1
Unit Price Work—definition of 1
Unit Price Work—general 11.9, 14.1, 14.5
Unit Prices 11.3.1
Unit Prices, Determinations for 9.10
Use of Premises 6.16-6.18
Utility owners 6.13, 6.20, 7.2-7.3

Values, Schedule of 2.6, 2.9, 14.1
Variations in Work—Authorized 6.25, 6.27, 9.5
Visits to Site—by Engineer 9.2

Waiver of Claims—on Final Payment 14.16
Waiver of Rights by insured parties 5.10, 6.11
Warranty and Guarantee—by Contractor 13.1
Warranty of Title, Contractor's 14.3
Work, Access to 13.2
Work—by others 7
Work Continuing During Disputes 6.29
Work, Cost of 11.4-11.5
Work—definition of 1
Work Directive Change—definition of 1
Work Directive Change—principal
references to 3.4.3, 10.1-10.2
Work, Neglected by Contractor 13.14
Work, Stopping by Contractor 15.5
Work, Stopping by Owner 15.1-15.4
Written Amendment—definition of 1
Written Amendment—principal
references to 3.4.1, 10.1, 11.2, 12.1

GENERAL CONDITIONS

ARTICLE 1—DEFINITIONS

Wherever used in these General Conditions or in the other Contract Documents the following terms have the meanings indicated which are applicable to both the singular and plural thereof:

Addenda—Written or graphic instruments issued prior to the opening of Bids which clarify, correct or change the bidding documents or the Contract Documents.

Agreement—The written agreement between OWNER and CONTRACTOR covering the Work to be performed; other Contract Documents are attached to the Agreement and made a part thereof as provided therein.

Application for Payment—The form accepted by ENGINEER which is to be used by CONTRACTOR in requesting progress or final payments and which is to include such supporting documentation as is required by the Contract Documents.

Bid—The offer or proposal of the bidder submitted on the prescribed form setting forth the prices for the Work to be performed.

* BIDDER-(see ¶SC-1 of Supplementary Conditions)

Bonds—Bid, performance and payment bonds and other instruments of security.

Change Order—A document recommended by ENGINEER, which is signed by CONTRACTOR and OWNER and authorizes an addition, deletion or revision in the Work, or an adjustment in the Contract Price or the Contract Time, issued on or after the Effective Date of the Agreement.

Contract Documents—The Agreement, Addenda (which pertain to the Contract Documents), CONTRACTOR's Bid (including documentation accompanying the Bid and any post-Bid documentation submitted prior to the Notice of Award) when attached as an exhibit to the Agreement, the Bonds, these General Conditions, the Supplementary Conditions, the Specifications and the Drawings as the same are more specifically identified in the Agreement, together with all amendments, modifications and supplements issued pursuant to paragraphs 3.4 and 3.5 on or after the Effective Date of the Agreement.

Contract Price—The moneys payable by OWNER to CONTRACTOR under the Contract Documents as stated in the Agreement (subject to the provisions of paragraph 11.9.1 in the case of Unit Price Work).

Contract Time—The number of days (computed as provided in paragraph 17.2) or the date stated in the Agreement for the completion of the Work.

CONTRACTOR—The person, firm or corporation with whom OWNER has entered into the Agreement.

defective—An adjective which when modifying the word Work refers to Work that is unsatisfactory, faulty or deficient, or does not conform to the Contract Documents, or does not meet the requirements of any inspection, reference standard, test or approval referred to in the Contract Documents, or has been damaged prior to ENGINEER's recommendation of final payment (unless responsibility for the protection thereof has been assumed by OWNER at Substantial Completion in accordance with paragraph 14.8 or 14.10).

Drawings—The drawings which show the character and scope of the Work to be performed and which have been prepared or approved by ENGINEER and are referred to in the Contract Documents.

Effective Date of the Agreement—The date indicated in the Agreement on which it becomes effective, but if no such date is indicated it means the date on which the Agreement is signed and delivered by the last of the two parties to sign and deliver.

ENGINEER—The person, firm or corporation named as such in the Agreement.

Field Order—A written order issued by ENGINEER which orders minor changes in the Work in accordance with paragraph 9.5 but which does not involve a change in the Contract Price or the Contract Time.

General Requirements—Sections of Division 1 of the Specifications.

Laws and Regulations; Laws or Regulations—Laws, rules, regulations, ordinances, codes and/or orders.

Notice of Award—The written notice by OWNER to the apparent successful bidder stating that upon compliance by the apparent successful bidder with the conditions precedent enumerated therein, within the time specified, OWNER will sign and deliver the Agreement.

Notice to Proceed—A written notice given by OWNER to CONTRACTOR (with a copy to ENGINEER) fixing the date on which the Contract Time will commence to run and on which CONTRACTOR shall start to perform CONTRACTOR'S obligations under the Contract Documents.

OWNER—The public body or authority, corporation, association, firm or person with whom CONTRACTOR has entered into the Agreement and for whom the Work is to be provided.

Partial Utilization—Placing a portion of the Work in service for the purpose for which it is intended (or a related purpose) before reaching Substantial Completion for all the Work.

Project—The total construction of which the Work to be provided under the Contract Documents may be the whole, or a part as indicated elsewhere in the Contract Documents.

Resident Project Representative—The authorized representative of ENGINEER who is assigned to the site or any part thereof. (see ¶SC-1 of Supplementary Conditions) *

Shop Drawings—All drawings, diagrams, illustrations, schedules and other data which are specifically prepared by or for CONTRACTOR to illustrate some portion of the Work and all illustrations, brochures, standard schedules, performance charts, instructions, diagrams and other information prepared by a Supplier and submitted by CONTRACTOR to illustrate material or equipment for some portion of the Work.

Specifications—Those portions of the Contract Documents consisting of written technical descriptions of materials, equipment, construction systems, standards and workmanship as applied to the Work and certain administrative details applicable thereto.

Subcontractor—An individual, firm or corporation having a direct contract with CONTRACTOR or with any other Subcontractor for the performance of a part of the Work at the site.

Substantial Completion—The Work (or a specified part thereof) has progressed to the point where, in the opinion of ENGINEER as evidenced by ENGINEER's definitive certificate of Substantial Completion, it is sufficiently complete, in accordance with the Contract Documents, so that the Work (or specified part) can be utilized for the purposes for which it is intended; or if there be no such certificate issued, when final payment is due in accordance with paragraph 14.13. The terms "substantially complete" and "substantially completed" as applied to any Work refer to Substantial Completion thereof.

Supplementary Conditions—The part of the Contract Documents which amends or supplements these General Conditions.

Supplier—A manufacturer, fabricator, supplier, distributor, materialman or vendor.

Underground Facilities—All pipelines, conduits, ducts, cables, wires, manholes, vaults, tanks, tunnels or other such facilities or attachments, and any encasements containing such facilities which have been installed underground to furnish any of the following services or materials: electricity, gases, steam, liquid petroleum products, telephone or other communications, cable television, sewage and drainage removal, traffic or other control systems or water.

Unit Price Work—Work to be paid for on the basis of unit prices.

Work—The entire completed construction or the various separately identifiable parts thereof required to be furnished under the Contract Documents. Work is the result of performing services, furnishing labor and furnishing and incorporating materials and equipment into the construction, all as required by the Contract Documents.

Work Directive Change—A written directive to CONTRACTOR, issued on or after the Effective Date of the Agreement and signed by OWNER and recommended by ENGINEER, ordering an addition, deletion or revision in the Work, or responding to differing or unforeseen physical conditions under which the Work is to be performed as provided in paragraph 4.2 or 4.3 or to emergencies under paragraph 6.22. A Work Directive Change may not change the Contract Price or the Contract Time, but is evidence that the parties expect that the change directed or documented by a Work Directive Change will be incorporated in a subsequently issued Change Order following negotiations by the parties as to its effect, if any, on the Contract Price or Contract Time as provided in paragraph 10.2.

Written Amendment—A written amendment of the Contract Documents, signed by OWNER and CONTRACTOR on or after the Effective Date of the Agreement and normally dealing with the nonengineering or nontechnical rather than strictly Work-related aspects of the Contract Documents.

ARTICLE 2—PRELIMINARY MATTERS

Delivery of Bonds:

2.1. When CONTRACTOR delivers the executed Agreements to OWNER, CONTRACTOR shall also deliver to OWNER such Bonds as CONTRACTOR may be required to furnish in accordance with paragraph 5.1.

Copies of Documents:

2.2. OWNER shall furnish to CONTRACTOR up to ten copies (unless otherwise specified in the Supplementary Conditions) of the Contract Documents as are reasonably necessary for the execution of the Work. Additional copies will be furnished, upon request, at the cost of reproduction.

Commencement of Contract Time; Notice to Proceed:

2.3. The Contract Time will commence to run on the thirtieth day after the Effective Date of the Agreement, or, if a Notice to Proceed is given, on the day indicated in the Notice to Proceed. A Notice to Proceed may be given at any time within thirty days after the Effective Date of the Agreement. ~~In no event will the Contract Time commence to run later than the seventy-fifth day after the day of Bid opening or the thirtieth day after the Effective Date of the Agreement, whichever date is earlier.~~ (See ¶SC-2.3 of Supplementary Conditions) *

Starting the Project:

2.4. CONTRACTOR shall start to perform the Work on the date when the Contract Time commences to run, but no Work shall be done at the site prior to the date on which the Contract Time commences to run.

Before Starting Construction:

2.5. Before undertaking each part of the Work, CONTRACTOR shall carefully study and compare the Contract Documents and check and verify pertinent figures shown

thereon and all applicable field measurements. CONTRACTOR shall promptly report in writing to ENGINEER any conflict, error or discrepancy which CONTRACTOR may discover and shall obtain a written interpretation or clarification from ENGINEER before proceeding with any Work affected thereby; however, CONTRACTOR shall not be liable to OWNER or ENGINEER for failure to report any conflict, error or discrepancy in the Contract Documents, unless CONTRACTOR had actual knowledge thereof or should reasonably have known thereof.

2.6. Within ten days after the Effective Date of the Agreement (unless otherwise specified in the General Requirements), CONTRACTOR shall submit to ENGINEER for review:

2.6.1. an estimated progress schedule indicating the starting and completion dates of the various stages of the Work;

2.6.2. a preliminary schedule of Shop Drawing submissions; and

2.6.3. a preliminary schedule of values for all of the Work which will include quantities and prices of items aggregating the Contract Price and will subdivide the Work into component parts in sufficient detail to serve as the basis for progress payments during construction. Such prices will include an appropriate amount of overhead and profit applicable to each item of Work which will be confirmed in writing by CONTRACTOR at the time of submission.

2.7. ~~Before any Work at the site is started, CONTRACTOR shall deliver to OWNER, with a copy to ENGINEER, certificates (and other evidence of insurance requested by OWNER) which CONTRACTOR is required to purchase and maintain in accordance with paragraphs 5.3 and 5.4, and OWNER shall deliver to CONTRACTOR certificates (and other evidence of insurance requested by CONTRACTOR) which OWNER is required to purchase and maintain in accordance with paragraphs 5.6 and 5.7.~~ (See ¶Sc-2.7 of
* the Supplementary Conditions)

Preconstruction Conference:

2.8. Within twenty days after the Effective Date of the Agreement, but before CONTRACTOR starts the Work at the site, a conference attended by CONTRACTOR, ENGINEER and others as appropriate will be held to discuss the schedules referred to in paragraph 2.6, to discuss procedures for handling Shop Drawings and other submittals and for processing Applications for Payment, and to establish a working understanding among the parties as to the Work.

Finalizing Schedules:

2.9. At least ten days before submission of the first Application for Payment a conference attended by CONTRACTOR, ENGINEER and others as appropriate will be held to finalize the schedules submitted in accordance with paragraph 2.6. The finalized progress schedule will be acceptable to ENGINEER as providing an orderly progression of the Work to completion within the Contract Time, but such acceptance will neither impose on ENGINEER responsibility for the progress or scheduling of the Work nor relieve CONTRACTOR from full responsibility therefor. The finalized schedule of Shop Drawing submissions will be acceptable to ENGINEER as providing a workable arrangement for processing the submissions. The finalized schedule of values will be acceptable to ENGINEER as to form and substance.

ARTICLE 3—CONTRACT DOCUMENTS: INTENT, AMENDING, REUSE

Intent:

3.1. The Contract Documents comprise the entire agreement between OWNER and CONTRACTOR concerning the Work. The Contract Documents are complementary; what is called for by one is as binding as if called for by all. The Contract Documents will be construed in accordance with the law of the place of the Project.

3.2. It is the intent of the Contract Documents to describe a functionally complete Project (or part thereof) to be constructed in accordance with the Contract Documents. Any Work, materials or equipment that may reasonably be inferred from the Contract Documents as being required to produce the intended result will be supplied whether or not specifically called for. When words which have a well-known technical or trade meaning are used to describe Work, materials or equipment such words shall be interpreted in accordance with that meaning. Reference to standard specifications, manuals or codes of any technical society, organization or association, or to the Laws or Regulations of any governmental authority, whether such reference be specific or by implication, shall mean the latest standard specification, manual, code or Laws or Regulations in effect at the time of opening of Bids (or, on the Effective Date of the Agreement if there were no Bids), except as may be otherwise specifically stated. However, no provision of any referenced standard specification, manual or code (whether or not specifically incorporated by reference in the Contract Documents) shall be effective to change the duties and responsibilities of OWNER, CONTRACTOR or ENGINEER, or any of their consultants, agents or employees from those set forth in the Contract Documents, nor shall it be effective to assign to ENGINEER, or any of ENGINEER's consultants, agents or employees, any duty or authority to supervise or direct the furnishing or performance of the Work or any duty or authority to undertake responsibility contrary to the provisions of paragraph 9.15 or 9.16. Clarifications and interpretations of the Contract Documents shall be issued by ENGINEER as provided in paragraph 9.4.

3.3. If, during the performance of the Work, CONTRACTOR finds a conflict, error or discrepancy in the Contract Documents, CONTRACTOR shall so report to ENGINEER in writing at once and before proceeding with the Work affected thereby shall obtain a written interpretation or clarification

from ENGINEER; however, CONTRACTOR shall not be liable to OWNER or ENGINEER for failure to report any conflict, error or discrepancy in the Contract Documents unless CONTRACTOR had actual knowledge thereof or should reasonably have known thereof.

Amending and Supplementing Contract Documents:

3.4. The Contract Documents may be amended to provide for additions, deletions and revisions in the Work or to modify the terms and conditions thereof in one or more of the following ways:

3.4.1. a formal Written Amendment,

3.4.2. a Change Order (pursuant to paragraph 10.4), or

3.4.3. a Work Directive Change (pursuant to paragraph 10.1).

As indicated in paragraphs 11.2 and 12.1, Contract Price and Contract Time may only be changed by a Change Order or a Written Amendment.

3.5. In addition, the requirements of the Contract Documents may be supplemented, and minor variations and deviations in the Work may be authorized, in one or more of the following ways:

3.5.1. a Field Order (pursuant to paragraph 9.5),

3.5.2. ENGINEER's approval of a Shop Drawing or sample (pursuant to paragraphs 6.26 and 6.27), or

3.5.3. ENGINEER's written interpretation or clarification (pursuant to paragraph 9.4).

Reuse of Documents:

3.6. Neither CONTRACTOR nor any Subcontractor or Supplier or other person or organization performing or furnishing any of the Work under a direct or indirect contract with OWNER shall have or acquire any title to or ownership rights in any of the Drawings, Specifications or other documents (or copies of any thereof) prepared by or bearing the seal of ENGINEER; and they shall not reuse any of them on extensions of the Project or any other project without written consent of OWNER and ENGINEER and specific written verification or adaptation by ENGINEER.

ARTICLE 4—AVAILABILITY OF LANDS; PHYSICAL CONDITIONS; REFERENCE POINTS

Availability of Lands:

4.1. OWNER shall furnish, as indicated in the Contract Documents, the lands upon which the Work is to be performed, rights-of-way and easements for access thereto, and such other lands which are designated for the use of CONTRACTOR. Easements for permanent structures or permanent changes in existing facilities will be obtained and pai for by OWNER, unless otherwise provided in the Contract Documents. If CONTRACTOR believes that any delay in OWNER's furnishing these lands, rights-of-way or easements entitles CONTRACTOR to an extension of the Contract Time, CONTRACTOR may make a claim therefor as provided in Article 12. CONTRACTOR shall provide for all additional lands and access thereto that may be required for temporary construction facilities or storage of materials and equipment.

Physical Conditions: (see ¶SC 4.2.1 of the Supplementary Conditions)

4.2.1. *Explorations and Reports:* ~~Reference is made to the Supplementary Conditions for identification of those reports of explorations and tests of subsurface conditions at the site that have been utilized by ENGINEER in preparation of the Contract Documents. CONTRACTOR may rely upon the accuracy of the technical data contained in such reports, but not upon nontechnical data, interpretations or opinions contained therein or for the completeness thereof for CONTRACTOR's purposes. Except as indicated in the immediately preceding sentence and in paragraph 4.2.6, CONTRACTOR shall have full responsibility with respect to subsurface conditions at the site.~~

4.2.2. *Existing Structures:* ~~Reference is made to the Supplementary Conditions for identification of those drawings of physical conditions in or relating to existing surface and subsurface structures (except Underground Facilities referred to in paragraph 4.3) which are at or contiguous to the site that have been utilized by ENGINEER in preparation of the Contract Documents. CONTRACTOR may rely upon the accuracy of the technical data contained in such drawings, but not for the completeness thereof for CONTRACTOR's purposes. Except as indicated in the immediately preceding sentence and in paragraph 4.2.6, CONTRACTOR shall have full responsibility with respect to physical conditions in or relating to such structures.~~

4.2.3. *Report of Differing Conditions:* If CONTRACTOR believes that:

4.2.3.1. any technical data on which CONTRACTOR is entitled to rely as provided in paragraphs 4.2.1 and 4.2.2 is inaccurate, or

4.2.3.2. any physical condition uncovered or revealed at the site differs materially from that indicated, reflected or referred to in the Contract Documents,

CONTRACTOR shall, promptly after becoming aware thereof and before performing any Work in connection therewith (except in an emergency as permitted by paragraph 6.22), notify OWNER and ENGINEER in writing about the inaccuracy or difference.

4.2.4. *ENGINEER's Review:* ENGINEER will promptly review the pertinent conditions, determine the necessity of obtaining additional explorations or tests with respect thereto and advise OWNER in writing (with a copy to CONTRACTOR) of ENGINEER's findings and conclusions.

4.2.5. *Possible Document Change:* If ENGINEER concludes that there is a material error in the Contract Documents or that because of newly discovered conditions a change in the Contract Documents is required, a Work Directive Change or a Change Order will be issued as provided in Article 10 to reflect and document the consequences of the inaccuracy or difference.

4.2.6. *Possible Price and Time Adjustments:* In each such case, an increase or decrease in the Contract Price or an extension or shortening of the Contract Time, or any combination thereof, will be allowable to the extent that they are attributable to any such inaccuracy or difference. If OWNER and CONTRACTOR are unable to agree as to the amount or length thereof, a claim may be made therefor as provided in Articles 11 and 12.

Physical Conditions—Underground Facilities:

4.3.1. *Shown or Indicated:* The information and data shown or indicated in the Contract Documents with respect to existing Underground Facilities at or contiguous to the site is based on information and data furnished to OWNER or ENGINEER by the owners of such Underground Facilities or by others. Unless it is otherwise expressly provided in the Supplementary Conditions:

4.3.1.1. OWNER and ENGINEER shall not be responsible for the accuracy or completeness of any such information or data; and,

4.3.1.2. CONTRACTOR shall have full responsibility for reviewing and checking all such information and data, for locating all Underground Facilities shown or indicated in the Contract Documents, for coordination of the Work with the owners of such Underground Facilities during construction, for the safety and protection thereof as provided in paragraph 6.20 and repairing any damage thereto resulting from the Work, the cost of all of which will be considered as having been included in the Contract Price.

4.3.2. *Not Shown or Indicated.* If an Underground Facility is uncovered or revealed at or contiguous to the site which was not shown or indicated in the Contract Documents and which CONTRACTOR could not reasonably have been expected to be aware of, CONTRACTOR shall, promptly after becoming aware thereof and before performing any Work affected thereby (except in an emergency as permitted by paragraph 6.22), identify the owner of such Underground Facility and give written notice thereof to that owner and to OWNER and ENGINEER. ENGINEER will promptly review the Underground Facility to determine the extent to which the Contract Documents should be modified to reflect and document the consequences of the existence of the Underground Facility, and the Contract Documents will be amended or supplemented to the extent necessary. During such time, CONTRACTOR shall be responsible for the safety and protection of such Underground Facility as provided in paragraph 6.20. CONTRACTOR shall be allowed an increase in the Contract Price or an extension of the Contract Time, or both, to the extent that they are attributable to the existence of any Underground Facility that was not shown or indicated in the Contract Documents and which CONTRACTOR could not reasonably have been expected to be aware of. If the parties are unable to agree as to the amount or length thereof, CONTRACTOR may make a claim therefor as provided in Articles 11 and 12.

Reference Points:

4.4. OWNER shall provide engineering surveys to establish reference points for construction which in ENGINEER's judgment are necessary to enable CONTRACTOR to proceed with the Work. CONTRACTOR shall be responsible for laying out the Work (unless otherwise specified in the General Requirements), shall protect and preserve the established reference points and shall make no changes or relocations without the prior written approval of OWNER. CONTRACTOR shall report to ENGINEER whenever any reference point is lost or destroyed or requires relocation because of necessary changes in grades or locations, and shall be responsible for the accurate replacement or relocation of such reference points by professionally qualified personnel.

ARTICLE 5—BONDS AND INSURANCE

Performance and Other Bonds:

5.1. CONTRACTOR shall furnish performance and payment Bonds, each in an amount at least equal to the Contract Price as security for the faithful performance and payment of all CONTRACTOR's obligations under the Contract Documents. These Bonds shall remain in effect at least until one year after the date when final payment becomes due, except as otherwise provided by Law or Regulation or by the Contract Documents. CONTRACTOR shall also furnish such other Bonds as are required by the Supplementary Conditions. All Bonds shall be in the forms prescribed by Law or Regulation or by the Contract Documents and be executed by such sureties as are named in the current list of "Companies Holding Certificates of Authority as Acceptable Sureties on Federal Bonds and as Acceptable Reinsuring Companies" as published in Circular 570 (amended) by the Audit Staff Bureau of Accounts, U.S. Treasury Department. All Bonds signed by an agent must be accompanied by a certified copy of the authority to act. **(See SC-5.1 of the Supplementary Conditions)**

5.2. If the surety on any Bond furnished by CONTRACTOR is declared a bankrupt or becomes insolvent or its right to do business is terminated in any state where any part of

the Project is located or it ceases to meet the requirements of paragraph 5.1, CONTRACTOR shall within five days thereafter substitute another Bond and Surety, both of which must be acceptable to OWNER.

* ***Contractor's Liability Insurance:*** (See ¶SC-5.3 of the Supplementary Conditions)

5.3. CONTRACTOR shall purchase and maintain such comprehensive general liability and other insurance as is appropriate for the Work being performed and furnished and as will provide protection from claims set forth below which may arise out of or result from CONTRACTOR's performance and furnishing of the Work and CONTRACTOR's other obligations under the Contract Documents, whether it is to be performed or furnished by CONTRACTOR, by any Subcontractor, by anyone directly or indirectly employed by any of them to perform or furnish any of the Work, or by anyone for whose acts any of them may be liable:

5.3.1. Claims under workers' or workmen's compensation, disability benefits and other similar employee benefit acts;

5.3.2. Claims for damages because of bodily injury, occupational sickness or disease, or death of CONTRACTOR's employees;

5.3.3. Claims for damages because of bodily injury, sickness or disease, or death of any person other than CONTRACTOR's employees;

5.3.4. Claims for damages insured by personal injury liability coverage which are sustained (a) by any person as a result of an offense directly or indirectly related to the employment of such person by CONTRACTOR, or (b) by any other person for any other reason;

5.3.5. Claims for damages, other than to the Work itself, because of injury to or destruction of tangible property wherever located, including loss of use resulting therefrom;

5.3.6. Claims arising out of operation of Laws or Regulations for damages because of bodily injury or death of any person or for damage to property; and

5.3.7. Claims for damages because of bodily injury or death of any person or property damage arising out of the ownership, maintenance or use of any motor vehicle.

The insurance required by this paragraph 5.3 shall include the specific coverages and be written for not less than the limits of liability and coverages provided in the Supplementary Conditions, or required by law, whichever is greater. The comprehensive general liability insurance shall include completed operations insurance. All of the policies of insurance so required to be purchased and maintained (or the certificates or other evidence thereof) shall contain a provision or endorsement that the coverage afforded will not be cancelled, materially changed or renewal refused until at least thirty days' prior written notice has been given to OWNER and ENGINEER by certified mail. All such insurance shall remain in effect until final payment and at all times thereafter when CONTRACTOR may be correcting, removing or replacing *defective* Work in accordance with paragraph 13.12. In addition, CONTRACTOR shall maintain such completed operations insurance for at least two years after final payment and furnish OWNER with evidence of continuation of such insurance at final payment and one year thereafter.

Contractual Liability Insurance: (See ¶SC-5.4 of the Supplementary Conditions) *

5.4. The comprehensive general liability insurance required by paragraph 5.3 will include contractual liability insurance applicable to CONTRACTOR's obligations under paragraphs 6.30 and 6.31.

Owner's Liability Insurance: (See ¶SC-5.5 of the Supplementary Conditions) *

~~5.5. OWNER shall be responsible for purchasing and maintaining OWNER's own liability insurance and, at OWNER's option, may purchase and maintain such insurance as will protect OWNER against claims which may arise from operations under the Contract Documents.~~

Property Insurance: (See ¶SC-5.6 thru 5.10 of the Supplementary Conditions) *

5.6. ~~Unless otherwise provided in the Supplementary Conditions, OWNER shall purchase and maintain property insurance upon the Work at the site to the full insurable value thereof (subject to such deductible amounts as may be provided in the Supplementary Conditions or required by Laws and Regulations). This insurance shall include the interests of OWNER, CONTRACTOR, Subcontractors, ENGINEER and ENGINEER's consultants in the Work, all of whom shall be listed as insureds or additional insured parties, shall insure against the perils of fire and extended coverage and shall include "all risk" insurance for physical loss and damage including theft, vandalism and malicious mischief, collapse and water damage, and such other perils as may be provided in the Supplementary Conditions, and shall include damages, losses and expenses arising out of or resulting from any insured loss or incurred in the repair or replacement of any insured property (including but not limited to fees and charges of engineers, architects, attorneys and other professionals). If not covered under the "all risk" insurance or otherwise provided in the Supplementary Conditions, CONTRACTOR shall purchase and maintain similar property insurance on portions of the Work stored on and off the site or in transit when such portions of the Work are to be included in an Application for Payment.~~

5.7. ~~OWNER shall purchase and maintain such boiler and machinery insurance or additional property insurance as may be required by the Supplementary Conditions or Laws and Regulations which will include the interests of OWNER, CONTRACTOR, Subcontractors, ENGINEER AND ENGINEER's consultants in the Work, all of whom shall be listed as insured or additional insured parties.~~

5.8. ~~All the policies of insurance (or the certificates or other evidence thereof) required to be purchased and maintained by OWNER in accordance with paragraphs 5.6 and 5.7 will contain a provision or endorsement that the coverage afforded will not be cancelled or materially changed or renewal refused until at least thirty days' prior written notice has been given to CONTRACTOR by certified mail and will contain waiver provisions in accordance with paragraph 5.11.2.~~

5.9. ~~OWNER shall not be responsible for purchasing and maintaining any property insurance to protect the interests of CONTRACTOR, Subcontractors or others in the Work to the extent of any deductible amounts that are provided in the Supplementary Conditions. The risk of loss within the deductible amount, will be borne by CONTRACTOR, Subcontractor or others suffering any such loss and if any of them wishes property insurance coverage within the limits of such amounts, each may purchase and maintain it at the purchaser's own expense.~~

5.10. ~~If CONTRACTOR requests in writing that other special insurance be included in the property insurance policy, OWNER shall, if possible, include such insurance, and the cost thereof will be charged to CONTRACTOR by appropriate Change Order or Written Amendment. Prior to commencement of the Work at the site, OWNER shall in writing advise CONTRACTOR whether or not such other insurance has been procured by OWNER.~~

Waiver of Rights:

5.11.1. OWNER and CONTRACTOR waive all rights against each other for all losses and damages caused by any of the perils covered by the policies of insurance provided in response to paragraphs 5.6 and 5.7 and any other property insurance applicable to the Work, and also waive all such rights against the Subcontractors, ENGINEER, ENGINEER's consultants and all other parties named as insureds in such policies for losses and damages so caused. As required by paragraph 6.11, each subcontract between CONTRACTOR and a Subcontractor will contain similar waiver provisions by the Subcontractor in favor of OWNER, CONTRACTOR, ENGINEER, ENGINEER's consultants and all other parties named as insureds. None of the above waivers shall extend to the rights that any of the insured parties may have to the proceeds of insurance held by OWNER as trustee or otherwise payable under any policy so issued.

5.11.2. OWNER and CONTRACTOR intend that any policies provided in response to paragraphs 5.6 and 5.7 shall protect all of the parties insured and provide primary coverage for all losses and damages caused by the perils covered thereby. Accordingly, all such policies shall contain provisions to the effect that in the event of payment of any loss or damage the insurer will have no rights of recovery against any of the parties named as insureds or additional insureds, and if the insurers require separate waiver forms to be signed by ENGINEER or ENGINEER's consultant OWNER will obtain the same, and if such waiver forms are required of any Subcontractor, CONTRACTOR will obtain the same.

Receipt and Application of Proceeds:

5.12. Any insured loss under the policies of insurance required by paragraphs 5.6 and 5.7 will be adjusted with OWNER and made payable to OWNER as trustee for the insureds, as their interests may appear, subject to the requirements of any applicable mortgage clause and of paragraph 5.13. OWNER shall deposit in a separate account any money so received, and shall distribute it in accordance with such agreement as the parties in interest may reach. If no other special agreement is reached the damaged Work shall be repaired or replaced, the moneys so received applied on account thereof and the Work and the cost thereof covered by an appropriate Change Order or Written Amendment.

5.13. OWNER as trustee shall have power to adjust and settle any loss with the insurers unless one of the parties in interest shall object in writing within fifteen days after the occurrence of loss to OWNER's exercise of this power. If such objection be made, OWNER as trustee shall make settlement with the insurers in accordance with such agreement as the parties in interest may reach. If required in writing by any party in interest, OWNER as trustee shall, upon the occurrence of an insured loss, give bond for the proper performance of such duties.

Acceptance of Insurance: (See ¶SC-5.14 of the Supplementary Conditions) *

5.14. ~~If OWNER has any objection to the coverage afforded by or other provisions of the insurance required to be purchased and maintained by CONTRACTOR in accordance with paragraphs 5.3 and 5.4 on the basis of its not complying with the Contract Documents, OWNER shall notify CONTRACTOR in writing thereof within ten days of the date of delivery of such certificates to OWNER in accordance with paragraph 2.7. If CONTRACTOR has any objection to the coverage afforded by or other provisions of the policies of insurance required to be purchased and maintained by OWNER in accordance with paragraphs 5.6 and 5.7 on the basis of their not complying with the Contract Documents, CONTRACTOR shall notify OWNER in writing thereof within ten days of the date of delivery of such certificates to CONTRACTOR in accordance with paragraph 2.7. OWNER and CONTRACTOR shall each provide to the other such additional information in respect of insurance provided by each as the other may reasonably request. Failure by OWNER or CONTRACTOR to give any such notice of objection within the time provided shall constitute acceptance of such insurance purchased by the other as complying with the Contract Documents.~~

Partial Utilization—Property Insurance:

5.15. If OWNER finds it necessary to occupy or use a portion or portions of the Work prior to Substantial Completion of all the Work, such use or occupancy may be accomplished in accordance with paragraph 14.10; provided that no

such use or occupancy shall commence before the insurers providing the property insurance have acknowledged notice thereof and in writing effected the changes in coverage necessitated thereby. The insurers providing the property insurance shall consent by endorsement on the policy or policies, but the property insurance shall not be cancelled or lapse on account of any such partial use or occupancy.

ARTICLE 6—CONTRACTOR'S RESPONSIBILITIES

Supervision and Superintendence:

6.1. CONTRACTOR shall supervise and direct the Work competently and efficiently, devoting such attention thereto and applying such skills and expertise as may be necessary to perform the Work in accordance with the Contract Documents. CONTRACTOR shall be solely responsible for the means, methods, techniques, sequences and procedures of construction, but CONTRACTOR shall not be responsible for the negligence of others in the design or selection of a specific means, method, technique, sequence or procedure of construction which is indicated in and required by the Contract Documents. CONTRACTOR shall be responsible to see that the finished Work complies accurately with the Contract Documents.

6.2. CONTRACTOR shall keep on the Work at all times during its progress a competent resident superintendent, who shall not be replaced without written notice to OWNER and ENGINEER except under extraordinary circumstances. The superintendent will be CONTRACTOR's representative at the site and shall have authority to act on behalf of CONTRACTOR. All communications given to the superintendent shall be as binding as if given to CONTRACTOR.

Labor, Materials and Equipment:

6.3. CONTRACTOR shall provide competent, suitably qualified personnel to survey and lay out the Work and perform construction as required by the Contract Documents. CONTRACTOR shall at all times maintain good discipline and order at the site. Except in connection with the safety or protection of persons or the Work or property at the site or adjacent thereto, and except as otherwise indicated in the Contract Documents, all Work at the site shall be performed during regular working hours, and CONTRACTOR will not permit overtime work or the performance of Work on Saturday, Sunday or any legal holiday without OWNER's written consent given after prior written notice to ENGINEER.

6.4. Unless otherwise specified in the General Requirements, CONTRACTOR shall furnish and assume full responsibility for all materials, equipment, labor, transportation, construction equipment and machinery, tools, appliances, fuel, power, light, heat, telephone, water, sanitary facilities, temporary facilities and all other facilities and incidentals necessary for the furnishing, performance, testing, start-up and completion of the Work.

6.5. All materials and equipment shall be of good quality and new, except as otherwise provided in the Contract Documents. If required by ENGINEER, CONTRACTOR shall furnish satisfactory evidence (including reports of required tests) as to the kind and quality of materials and equipment. All materials and equipment shall be applied, installed, connected, erected, used, cleaned and conditioned in accordance with the instructions of the applicable Supplier except as otherwise provided in the Contract Documents; but no provision of any such instructions will be effective to assign to ENGINEER, or any of ENGINEER's consultants, agents or employees, any duty or authority to supervise or direct the furnishing or performance of the Work or any duty or authority to undertake responsibility contrary to the provisions of paragraph 9.15 or 9.16.

Adjusting Progress Schedule:

6.6. CONTRACTOR shall submit to ENGINEER for acceptance (to the extent indicated in paragraph 2.9) adjustments in the progress schedule to reflect the impact thereon of new developments; these will conform generally to the progress schedule then in effect and additionally will comply with any provisions of the General Requirements applicable thereto.

Substitutes or "Or-Equal" Items:

6.7.1. Whenever materials or equipment are specified or described in the Contract Documents by using the name of a proprietary item or the name of a particular Supplier the naming of the item is intended to establish the type, function and quality required. Unless the name is followed by words indicating that no substitution is permitted, materials or equipment of other Suppliers may be accepted by ENGINEER if sufficient information is submitted by CONTRACTOR to allow ENGINEER to determine that the material or equipment proposed is equivalent or equal to that named. The procedure for review by ENGINEER will include the following as supplemented in the General Requirements. Requests for review of substitute items of material and equipment will not be accepted by ENGINEER from anyone other than CONTRACTOR. If CONTRACTOR wishes to furnish or use a substitute item of material or equipment, CONTRACTOR shall make written application to ENGINEER for acceptance thereof, certifying that the proposed substitute will perform adequately the functions and achieve the results called for by the general design, be similar and of equal substance to that specified and be suited to the same use as that specified. The application will state that the evaluation and acceptance of the proposed substitute will not prejudice CONTRACTOR's achievement of Substantial Completion on time, whether or not acceptance of the substitute for use in the Work will require a change in any of the Contract Documents (or in the provisions of any other direct contract with OWNER for work on the Project) to adapt the design to the proposed substitute and whether or not incorporation or use of the substitute in connection with the Work is subject to payment of any license fee or

royalty. All variations of the proposed substitute from that specified will be identified in the application and available maintenance, repair and replacement service will be indicated. The application will also contain an itemized estimate of all costs that will result directly or indirectly from acceptance of such substitute, including costs of redesign and claims of other contractors affected by the resulting change, all of which shall be considered by ENGINEER in evaluating the proposed substitute. ENGINEER may require CONTRACTOR to furnish at CONTRACTOR's expense additional data about the proposed substitute.

6.7.2. If a specific means, method, technique, sequence or procedure of construction is indicated in or required by the Contract Documents, CONTRACTOR may furnish or utilize a substitute means, method, sequence, technique or procedure of construction acceptable to ENGINEER, if CONTRACTOR submits sufficient information to allow ENGINEER to determine that the substitute proposed is equivalent to that indicated or required by the Contract Documents. The procedure for review by ENGINEER will be similar to that provided in paragraph 6.7.1 as applied by ENGINEER and as may be supplemented in the General Requirements.

6.7.3. ENGINEER will be allowed a reasonable time within which to evaluate each proposed substitute. ENGINEER will be the sole judge of acceptability, and no substitute will be ordered, installed or utilized without ENGINEER's prior written acceptance which will be evidenced by either a Change Order or an approved Shop Drawing. OWNER may require CONTRACTOR to furnish at CONTRACTOR's expense a special performance guarantee or other surety with respect to any substitute. ENGINEER will record time required by ENGINEER and ENGINEER's consultants in evaluating substitutions proposed by CONTRACTOR and in making changes in the Contract Documents occasioned thereby. Whether or not ENGINEER accepts a proposed substitute, CONTRACTOR shall reimburse OWNER for the charges of ENGINEER and ENGINEER's consultants for evaluating each proposed substitute.

Concerning Subcontractors, Suppliers and Others:

6.8.1. CONTRACTOR shall not employ any Subcontractor, Supplier or other person or organization (including those acceptable to OWNER and ENGINEER as indicated in paragraph 6.8.2), whether initially or as a substitute, against whom OWNER or ENGINEER may have reasonable objection. CONTRACTOR shall not be required to employ any Subcontractor, Supplier or other person or organization to furnish or perform any of the Work against whom CONTRACTOR has reasonable objection.

6.8.2. If the Supplementary Conditions require the identity of certain Subcontractors, Suppliers or other persons or organizations (including those who are to furnish the principal items of materials and equipment) to be submitted to OWNER in advance of the specified date prior to the Effective Date of the Agreement for acceptance by OWNER and ENGINEER and if CONTRACTOR has submitted a list thereof in accordance with the Supplementary Conditions, OWNER's or ENGINEER's acceptance (either in writing or by failing to make written objection thereto by the date indicated for acceptance or objection in the bidding documents or the Contract Documents) of any such Subcontractor, Supplier or other person or organization so identified may be revoked on the basis of reasonable objection after due investigation, in which case CONTRACTOR shall submit an acceptable substitute, the Contract Price will be increased by the difference in the cost occasioned by such substitution and an appropriate Change Order will be issued or Written Amendment signed. No acceptance by OWNER or ENGINEER of any such Subcontractor, Supplier or other person or organization shall constitute a waiver of any right of OWNER or ENGINEER to reject *defective* Work.

6.8.3. (See ¶SC-6.8.3 of the Supplementary Conditions) *

6.9. CONTRACTOR shall be fully responsible to OWNER and ENGINEER for all acts and omissions of the Subcontractors, Suppliers and other persons and organizations performing or furnishing any of the Work under a direct or indirect contract with CONTRACTOR just as CONTRACTOR is responsible for CONTRACTOR's own acts and omissions. Nothing in the Contract Documents shall create any contractual relationship between OWNER or ENGINEER and any such Subcontractor, Supplier or other person or organization, nor shall it create any obligation on the part of OWNER or ENGINEER to pay or to see to the payment of any moneys due any such Subcontractor, Supplier or other person or organization except as may otherwise be required by Laws and Regulations. (See ¶SC-6.9 of the Supplementary Conditions) *

6.10. The divisions and sections of the Specifications and the identifications of any Drawings shall not control CONTRACTOR in dividing the Work among Subcontractors or Suppliers or delineating the Work to be performed by any specific trade.

6.11. All Work performed for CONTRACTOR by a Subcontractor will be pursuant to an appropriate agreement between CONTRACTOR and the Subcontractor which specifically binds the Subcontractor to the applicable terms and conditions of the Contract Documents for the benefit of OWNER and ENGINEER and contains waiver provisions as required by paragraph 5.11. CONTRACTOR shall pay each Subcontractor a just share of any insurance moneys received by CONTRACTOR on account of losses under policies issued pursuant to paragraphs 5.6 and 5.7.

Patent Fees and Royalties:

6.12. CONTRACTOR shall pay all license fees and royalties and assume all costs incident to the use in the performance of the Work or the incorporation in the Work of any invention, design, process, product or device which is the subject of patent rights or copyrights held by others. If a particular invention, design, process, product or device is specified in the Contract Documents for use in the performance of the Work and if to the actual knowledge of OWNER

or ENGINEER its use is subject to patent rights or copyrights calling for the payment of any license fee or royalty to others, the existence of such rights shall be disclosed by OWNER in the Contract Documents. CONTRACTOR shall indemnify and hold harmless OWNER and ENGINEER and anyone directly or indirectly employed by either of them from and against all claims, damages, losses and expenses (including attorneys' fees and court and arbitration costs) arising out of any infringement of patent rights or copyrights incident to the use in the performance of the Work or resulting from the incorporation in the Work of any invention, design, process, product or device not specified in the Contract Documents, and shall defend all such claims in connection with any alleged infringement of such rights.

Permits:

6.13. Unless otherwise provided in the Supplementary Conditions, CONTRACTOR shall obtain and pay for all construction permits and licenses. OWNER shall assist CONTRACTOR, when necessary, in obtaining such permits and licenses. CONTRACTOR shall pay all governmental charges and inspection fees necessary for the prosecution of the Work, which are applicable at the time of opening of Bids, or if there are no Bids on the Effective Date of the Agreement. CONTRACTOR shall pay all charges of utility owners for connections to the Work, and OWNER shall pay all charges of such utility owners for capital costs related thereto such as
* plant investment fees. (See ¶6.13 of the Supplementary Conditions)

Laws and Regulations:

6.14.1. CONTRACTOR shall give all notices and comply with all Laws and Regulations applicable to furnishing and performance of the Work. Except where otherwise expressly required by applicable Laws and Regulations, neither OWNER nor ENGINEER shall be responsible for monitoring CONTRACTOR's compliance with any Laws or Regulations.

6.14.2. If CONTRACTOR observes that the Specifications or Drawings are at variance with any Laws or Regulations, CONTRACTOR shall give ENGINEER prompt written notice thereof, and any necessary changes will be authorized by one of the methods indicated in paragraph 3.4. If CONTRACTOR performs any Work knowing or having reason to know that it is contrary to such Laws or Regulations, and without such notice to ENGINEER, CONTRACTOR shall bear all costs arising therefrom; however, it shall not be CONTRACTOR's primary responsibility to make certain that the Specifications and Drawings are in accordance with such Laws and Regulations.

Taxes:

6.15. CONTRACTOR shall pay all sales, consumer, use and other similar taxes required to be paid by CONTRACTOR in accordance with the Laws and Regulations of the place of the Project which are applicable during the performance of the Work.

Use of Premises:

6.16. CONTRACTOR shall confine construction equipment, the storage of materials and equipment and the operations of workers to the Project site and land and areas identified in and permitted by the Contract Documents and other land and areas permitted by Laws and Regulations, rights-of-way, permits and easements, and shall not unreasonably encumber the premises with construction equipment or other materials or equipment. CONTRACTOR shall assume full responsibility for any damage to any such land or area, or to the owner or occupant thereof or of any land or areas contiguous thereto, resulting from the performance of the Work. Should any claim be made against OWNER or ENGINEER by any such owner or occupant because of the performance of the Work, CONTRACTOR shall promptly attempt to settle with such other party by agreement or otherwise resolve the claim by arbitration or at law. CONTRACTOR shall, to the fullest extent permitted by Laws and Regulations, indemnify and hold OWNER and ENGINEER harmless from and against all claims, damages, losses and expenses (including, but not limited to, fees of engineers, architects, attorneys and other professionals and court and arbitration costs) arising directly, indirectly or consequentially out of any action, legal or equitable, brought by any such other party against OWNER or ENGINEER to the extent based on a claim arising out of CONTRACTOR's performance of the Work.

6.17. During the progress of the Work, CONTRACTOR shall keep the premises free from accumulations of waste materials, rubbish and other debris resulting from the Work. At the completion of the Work CONTRACTOR shall remove all waste materials, rubbish and debris from and about the premises as well as all tools, appliances, construction equipment and machinery, and surplus materials, and shall leave the site clean and ready for occupancy by OWNER. CONTRACTOR shall restore to original condition all property not designated for alteration by the Contract Documents.

6.18. CONTRACTOR shall not load nor permit any part of any structure to be loaded in any manner that will endanger the structure, nor shall CONTRACTOR subject any part of the Work or adjacent property to stresses or pressures that will endanger it.

Record Documents:

6.19. CONTRACTOR shall maintain in a safe place at the site one record copy of all Drawings, Specifications, Addenda, Written Amendments, Change Orders, Work Directive Changes, Field Orders and written interpretations and clarifications (issued pursuant to paragraph 9.4) in good order and annotated to show all changes made during construction. These record documents together with all approved samples and a counterpart of all approved Shop Drawings will be available to ENGINEER for reference. Upon com-

pletion of the Work, these record documents, samples and Shop Drawings will be delivered to ENGINEER for OWNER.

Safety and Protection:

6.20. CONTRACTOR shall be responsible for initiating, maintaining and supervising all safety precautions and programs in connection with the Work. CONTRACTOR shall take all necessary precautions for the safety of, and shall provide the necessary protection to prevent damage, injury or loss to:

6.20.1. all employees on the Work and other persons and organizations who may be affected thereby;

6.20.2. all the Work and materials and equipment to be incorporated therein, whether in storage on or off the site; and

6.20.3. other property at the site or adjacent thereto, including trees, shrubs, lawns, walks, pavements, roadways, structures, utilities and Underground Facilities not designated for removal, relocation or replacement in the course of construction.

CONTRACTOR shall comply with all applicable Laws and Regulations of any public body having jurisdiction for the safety of persons or property or to protect them from damage, injury or loss; and shall erect and maintain all necessary safeguards for such safety and protection. CONTRACTOR shall notify owners of adjacent property and of Underground Facilities and utility owners when prosecution of the Work may affect them, and shall cooperate with them in the protection, removal, relocation and replacement of their property. All damage, injury or loss to any property referred to in paragraph 6.20.2 or 6.20.3 caused, directly or indirectly, in whole or in part, by CONTRACTOR, any Subcontractor, Supplier or any other person or organization directly or indirectly employed by any of them to perform or furnish any of the Work or anyone for whose acts any of them may be liable, shall be remedied by CONTRACTOR (except damage or loss attributable to the fault of Drawings or Specifications or to the acts or omissions of OWNER or ENGINEER or anyone employed by either of them or anyone for whose acts either of them may be liable, and not attributable, directly or indirectly, in whole or in part, to the fault or negligence of CONTRACTOR). CONTRACTOR's duties and responsibilities for the safety and protection of the Work shall continue until such time as all the Work is completed and ENGINEER has issued a notice to OWNER and CONTRACTOR in accordance with paragraph 14.13 that the Work is acceptable (except as otherwise expressly provided in connection with Substantial Completion).

6.21. CONTRACTOR shall designate a responsible representative at the site whose duty shall be the prevention of accidents. This person shall be CONTRACTOR's superintendent unless otherwise designated in writing by CONTRACTOR to OWNER.

Emergencies:

6.22. In emergencies affecting the safety or protection of persons or the Work or property at the site or adjacent thereto, CONTRACTOR, without special instruction or authorization from ENGINEER or OWNER, is obligated to act to prevent threatened damage, injury or loss. CONTRACTOR shall give ENGINEER prompt written notice if CONTRACTOR believes that any significant changes in the Work or variations from the Contract Documents have been caused thereby. If ENGINEER determines that a change in the Contract Documents is required because of the action taken in response to an emergency, a Work Directive Change or Change Order will be issued to document the consequences of the changes or variations.

Shop Drawings and Samples:

6.23. After checking and verifying all field measurements and after complying with applicable procedures specified in the General Requirements, CONTRACTOR shall submit to ENGINEER for review and approval in accordance with the accepted schedule of Shop Drawing submissions (see paragraph 2.9), or for other appropriate action if so indicated in the Supplementary Conditions, five copies (unless otherwise specified in the General Requirements) of all Shop Drawings, which will bear a stamp or specific written indication that CONTRACTOR has satisfied CONTRACTOR's responsibilities under the Contract Documents with respect to the review of the submission. All submissions will be identified as ENGINEER may require. The data shown on the Shop Drawings will be complete with respect to quantities, dimensions, specified performance and design criteria, materials and similar data to enable ENGINEER to review the information as required.

6.24. CONTRACTOR shall also submit to ENGINEER for review and approval with such promptness as to cause no delay in Work, all samples required by the Contract Documents. All samples will have been checked by and accompanied by a specific written indication that CONTRACTOR has satisfied CONTRACTOR's responsibilities under the Contract Documents with respect to the review of the submission and will be identified clearly as to material, Supplier, pertinent data such as catalog numbers and the use for which intended.

6.25.1. Before submission of each Shop Drawing or sample CONTRACTOR shall have determined and verified all quantities, dimensions, specified performance criteria, installation requirements, materials, catalog numbers and similar data with respect thereto and reviewed or coordinated each Shop Drawing or sample with other Shop Drawings and samples and with the requirements of the Work and the Contract Documents.

6.25.2. At the time of each submission, CONTRACTOR shall give ENGINEER specific written notice of each variation that the Shop Drawings or samples may have from the requirements of the Contract Documents, and, in addition, shall cause a specific notation to be made on

each Shop Drawing submitted to ENGINEER for review and approval of each such variation.

6.26. ENGINEER will review and approve with reasonable promptness Shop Drawings and samples, but ENGINEER's review and approval will be only for conformance with the design concept of the Project and for compliance with the information given in the Contract Documents and shall not extend to means, methods, techniques, sequences or procedures of construction (except where a specific means, method, technique, sequence or procedure of construction is indicated in or required by the Contract Documents) or to safety precautions or programs incident thereto. The review and approval of a separate item as such will not indicate approval of the assembly in which the item functions. CONTRACTOR shall make corrections required by ENGINEER, and shall return the required number of corrected copies of Shop Drawings and submit as required new samples for review and approval. CONTRACTOR shall direct specific attention in writing to revisions other than the corrections called for by ENGINEER on previous submittals.

6.27. ENGINEER's review and approval of Shop Drawings or samples shall not relieve CONTRACTOR from responsibility for any variation from the requirements of the Contract Documents unless CONTRACTOR has in writing called ENGINEER's attention to each such variation at the time of submission as required by paragraph 6.25.2 and ENGINEER has given written approval of each such variation by a specific written notation thereof incorporated in or accompanying the Shop Drawing or sample approval; nor will any approval by ENGINEER relieve CONTRACTOR from responsibility for errors or omissions in the Shop Drawings or from responsibility for having complied with the provisions of paragraph 6.25.1.

6.28. Where a Shop Drawing or sample is required by the Specifications, any related Work performed prior to ENGINEER's review and approval of the pertinent submission will be the sole expense and responsibility of CONTRACTOR.

Continuing the Work:

6.29. CONTRACTOR shall carry on the Work and adhere to the progress schedule during all disputes or disagreements with OWNER. No Work shall be delayed or postponed pending resolution of any disputes or disagreements, except as permitted by paragraph 15.5 or as CONTRACTOR and OWNER may otherwise agree in writing.

Indemnification: See Paragraph SC-6.30 of the Supplementary Conditions

6.30. ~~To the fullest extent permitted by Laws and Regulations CONTRACTOR shall indemnify and hold harmless OWNER and ENGINEER and their consultants, agents and employees from and against all claims, damages, losses and expenses, direct, indirect or consequential (including but not limited to fees and charges of engineers, architects, attorneys and other professionals and court and arbitration costs) arising out of or resulting from the performance of the Work, provided that any such claim, damage, loss or expense (a) is attributable to bodily injury, sickness, disease or death, or to injury to or destruction of tangible property (other than the Work itself) including the loss of use resulting therefrom and (b) is caused in whole or in part by any negligent act or omission of CONTRACTOR, any Subcontractor, any person or organization directly or indirectly employed by any of them to perform or furnish any of the Work or anyone for whose acts any of them may be liable, regardless of whether or not it is caused in part by a party indemnified hereunder or arises by or is imposed by Law and Regulations regardless of the negligence of any such party.~~

See Paragraph SC-6.31 of the Supplementary Conditions

6.31. ~~In any and all claims against OWNER or ENGINEER or any of their consultants, agents or employees by any employee of CONTRACTOR, any Subcontractor, any person or organization directly or indirectly employed by any of them to perform or furnish any of the Work or anyone for whose acts any of them may be liable, the indemnification obligation under paragraph 6.30 shall not be limited in any way by any limitation on the amount or type of damages, compensation or benefits payable by or for CONTRACTOR or any such Subcontractor or other person or organization under workers' or workmen's compensation acts, disability benefit acts or other employee benefit acts.~~

6.32. The obligations of CONTRACTOR under paragraph 6.30 shall not extend to the liability of ENGINEER, ENGINEER's consultants, agents or employees arising out of the preparation or approval of maps, drawings, opinions, reports, surveys, Change Orders, designs or specifications.

ARTICLE 7—OTHER WORK

Related Work at Site:

7.1. OWNER may perform other work related to the Project at the site by OWNER's own forces, have other work performed by utility owners or let other direct contracts therefor which shall contain General Conditions similar to these. If the fact that such other work is to be performed was not noted in the Contract Documents, written notice thereof will be given to CONTRACTOR prior to starting any such other work; and, if CONTRACTOR believes that such performance will involve additional expense to CONTRACTOR or requires additional time and the parties are unable to agree as to the extent thereof, CONTRACTOR may make a claim therefor as provided in Articles 11 and 12.

7.2. CONTRACTOR shall afford each utility owner and other contractor who is a party to such a direct contract (or OWNER, if OWNER is performing the additional work with OWNER's employees) proper and safe access to the site and a reasonable opportunity for the introduction and storage of materials and equipment and the execution of such work, and shall properly connect and coordinate the Work with theirs. CONTRACTOR shall do all cutting, fitting and patching of the Work that may be required to make its several parts come together properly and integrate with such other work. CON-

TRACTOR shall not endanger any work of others by cutting, excavating or otherwise altering their work and will only cut or alter their work with the written consent of ENGINEER and the others whose work will be affected. The duties and responsibilities of CONTRACTOR under this paragraph are for the benefit of such utility owners and other contractors to the extent that there are comparable provisions for the benefit of CONTRACTOR in said direct contracts between OWNER and such utility owners and other contractors.

7.3. If any part of CONTRACTOR's Work depends for proper execution or results upon the work of any such other contractor or utility owner (or OWNER), CONTRACTOR shall inspect and promptly report to ENGINEER in writing any delays, defects or deficiencies in such work that render it unavailable or unsuitable for such proper execution and results. CONTRACTOR's failure so to report will constitute an acceptance of the other work as fit and proper for integration with CONTRACTOR's Work except for latent or non-apparent defects and deficiencies in the other work.

Coordination:

7.4. If OWNER contracts with others for the performance of other work on the Project at the site, the person or organization who will have authority and responsibility for coordination of the activities among the various prime contractors will be identified in the Supplementary Conditions, and the specific matters to be covered by such authority and responsibility will be itemized, and the extent of such authority and responsibilities will be provided, in the Supplementary Conditions. Unless otherwise provided in the Supplementary Conditions, neither OWNER nor ENGINEER shall have any authority or responsibility in respect of such coordination.

ARTICLE 8—OWNER'S RESPONSIBILITIES

8.1. OWNER shall issue all communications to CONTRACTOR through ENGINEER.

8.2. In case of termination of the employment of ENGINEER, OWNER shall appoint an engineer against whom CONTRACTOR makes no reasonable objection, whose status under the Contract Documents shall be that of the former ENGINEER. Any dispute in connection with such appointment shall be subject to arbitration.

8.3. OWNER shall furnish the data required of OWNER under the Contract Documents promptly and shall make payments to CONTRACTOR promptly after they are due as provided in paragraphs 14.4 and 14.13.

8.4. OWNER's duties in respect of providing lands and easements and providing engineering surveys to establish reference points are set forth in paragraphs 4.1 and 4.4. Paragraph 4.2 refers to OWNER's identifying and making available to CONTRACTOR copies of reports of explorations and tests of subsurface conditions at the site and in existing structures which have been utilized by ENGINEER in preparing the Drawings and Specifications.

8.5. OWNER's responsibilities in respect of purchasing and maintaining liability and property insurance are set forth in paragraphs 5.5 through 5.8.

8.6. OWNER is obligated to execute Change Orders as indicated in paragraph 10.4.

8.7. OWNER's responsibility in respect of certain inspections, tests and approvals is set forth in paragraph 13.4.

8.8. In connection with OWNER's right to stop Work or suspend Work, see paragraphs 13.10 and 15.1. Paragraph 15.2 deals with OWNER's right to terminate services of CONTRACTOR under certain circumstances.

ARTICLE 9—ENGINEER'S STATUS DURING CONSTRUCTION

Owner's Representative:

9.1. ENGINEER will be OWNER's representative during the construction period. The duties and responsibilities and the limitations of authority of ENGINEER as OWNER's representative during construction are set forth in the Contract Documents and shall not be extended without written consent of OWNER and ENGINEER.

Visits to Site:

9.2. ENGINEER will make visits to the site at intervals appropriate to the various stages of construction to observe the progress and quality of the executed Work and to determine, in general, if the Work is proceeding in accordance with the Contract Documents. ENGINEER will not be required to make exhaustive or continuous on-site inspections to check the quality or quantity of the Work. ENGINEER's efforts will be directed toward providing for OWNER a greater degree of confidence that the completed Work will conform to the Contract Documents. On the basis of such visits and on-site observations as an experienced and qualified design professional, ENGINEER will keep OWNER informed of the progress of the Work and will endeavor to guard OWNER against defects and deficiencies in the Work.

Project Representation:

9.3. If OWNER and ENGINEER agree, ENGINEER will furnish a Resident Project Representative to assist ENGINEER in observing the performance of the Work. The duties, responsibilities and limitations of authority of any such Resident Project Representative and assistants will be as provided in the Supplementary Conditions. If OWNER designates another agent to represent OWNER at the site who is not ENGINEER's agent or employee, the duties, responsibilities and limitations of authority of such other person will be as provided in the Supplementary Conditions.

9.3.1. (See ¶SC-9.3.1 of the Supplementary Conditions) *

Clarifications and Interpretations:

9.4. ENGINEER will issue with reasonable promptness such written clarifications or interpretations of the requirements of the Contract Documents (in the form of Drawings or otherwise) as ENGINEER may determine necessary, which shall be consistent with or reasonably inferable from the overall intent of the Contract Documents. If CONTRACTOR believes that a written clarification or interpretation justifies an increase in the Contract Price or an extension of the Contract Time and the parties are unable to agree to the amount or extent thereof, CONTRACTOR may make a claim therefor as provided in Article 11 or Article 12.

Authorized Variations in Work:

9.5. ENGINEER may authorize minor variations in the Work from the requirements of the Contract Documents which do not involve an adjustment in the Contract Price or the Contract Time and are consistent with the overall intent of the Contract Documents. These may be accomplished by a Field Order and will be binding on OWNER, and also on CONTRACTOR who shall perform the Work involved promptly. If CONTRACTOR believes that a Field Order justifies an increase in the Contract Price or an extension of the Contract Time and the parties are unable to agree as to the amount or extent thereof, CONTRACTOR may make a claim therefor as provided in Article 11 or 12.

Rejecting Defective Work:

9.6. ENGINEER will have authority to disapprove or reject Work which ENGINEER believes to be *defective*, and will also have authority to require special inspection or testing of the Work as provided in paragraph 13.9, whether or not the Work is fabricated, installed or completed. **(See SC-9.6 of the Supplementary Conditions)**

Shop Drawings, Change Orders and Payments:

9.7. In connection with ENGINEER's responsibility for Shop Drawings and samples, see paragraphs 6.23 through 6.29 inclusive.

9.8. In connection with ENGINEER's responsibilities as to Change Orders, see Articles 10, 11 and 12.

9.9. In connection with ENGINEER's responsibilities in respect of Applications for Payment, etc., see Article 14.

Determinations for Unit Prices:

9.10. ENGINEER will determine the actual quantities and classifications of Unit Price Work performed by CONTRACTOR. ENGINEER will review with CONTRACTOR ENGINEER's preliminary determinations on such matters before rendering a written decision thereon (by recommendation of an Application for Payment or otherwise). ENGINEER's written decisions thereon will be final and binding upon OWNER and CONTRACTOR, unless, within ten days after the date of any such decision, either OWNER or CONTRACTOR delivers to the other party to the Agreement and to ENGINEER written notice of intention to appeal from such a decision.

Decisions on Disputes:

9.11. ENGINEER will be the initial interpreter of the requirements of the Contract Documents and judge of the acceptability of the Work thereunder. Claims, disputes and other matters relating to the acceptability of the Work or the interpretation of the requirements of the Contract Documents pertaining to the performance and furnishing of the Work and claims under Articles 11 and 12 in respect of changes in the Contract Price or Contract Time will be referred initially to ENGINEER in writing with a request for a formal decision in accordance with this paragraph, which ENGINEER will render in writing within a reasonable time. Written notice of each such claim, dispute and other matter will be delivered by the claimant to ENGINEER and the other party to the Agreement promptly (but in no event later than thirty days) after the occurrence of the event giving rise thereto, and written supporting data will be submitted to ENGINEER and the other party within sixty days after such occurrence unless ENGINEER allows an additional period of time to ascertain more accurate data in support of the claim.

9.12. When functioning as interpreter and judge under paragraphs 9.10 and 9.11, ENGINEER will not show partiality to OWNER or CONTRACTOR and will not be liable in connection with any interpretation or decision rendered in good faith in such capacity. The rendering of a decision by ENGINEER pursuant to paragraphs 9.10 and 9.11 with respect to any such claim, dispute or other matter (except any which have been waived by the making or acceptance of final payment as provided in paragraph 14.16) will be a condition precedent to any exercise by OWNER or CONTRACTOR of such rights or remedies as either may otherwise have under the Contract Documents or by Laws or Regulations in respect of any such claim, dispute or other matter.

Limitations on ENGINEER's Responsibilities:

9.13. Neither ENGINEER's authority to act under this Article 9 or elsewhere in the Contract Documents nor any decision made by ENGINEER in good faith either to exercise or not exercise such authority shall give rise to any duty or responsibility of ENGINEER to CONTRACTOR, any Subcontractor, any Supplier, or any other person or organization performing any of the Work, or to any surety for any of them.

9.14. Whenever in the Contract Documents the terms "as ordered", "as directed", "as required", "as allowed", "as approved" or terms of like effect or import are used, or the adjectives "reasonable", "suitable", "acceptable", "proper" or "satisfactory" or adjectives of like effect or import are used to describe a requirement, direction, review or judgment of ENGINEER as to the Work, it is intended that such requirement, direction, review or judgment will be solely to evaluate the Work for compliance with the Contract Documents (unless there is a specific statement indicating otherwise). The use of any such term or adjective shall not be

effective to assign to ENGINEER any duty or authority to supervise or direct the furnishing or performance of the Work or any duty or authority to undertake responsibility contrary to the provisions of paragraph 9.15 or 9.16.

9.15. ENGINEER will not be responsible for CONTRACTOR's means, methods, techniques, sequences or procedures of construction, or the safety precautions and programs incident thereto, and ENGINEER will not be responsible for CONTRACTOR's failure to perform or furnish the Work in accordance with the Contract Documents.

9.16. ENGINEER will not be responsible for the acts or omissions of CONTRACTOR or of any Subcontractor, any Supplier, or of any other person or organization performing or furnishing any of the Work.

ARTICLE 10—CHANGES IN THE WORK

10.1. Without invalidating the Agreement and without notice to any surety, OWNER may, at any time or from time to time, order additions, deletions or revisions in the Work; these will be authorized by a Written Amendment, a Change Order, or a Work Directive Change. Upon receipt of any such document, CONTRACTOR shall promptly proceed with the Work involved which will be performed under the applicable conditions of the Contract Documents (except as otherwise specifically provided).

10.2. If OWNER and CONTRACTOR are unable to agree as to the extent, if any, of an increase or decrease in the Contract Price or an extension or shortening of the Contract Time that should be allowed as a result of a Work Directive Change, a claim may be made therefor as provided in Article 11 or Article 12.

10.3. CONTRACTOR shall not be entitled to an increase in the Contract Price or an extension of the Contract Time with respect to any Work performed that is not required by the Contract Documents as amended, modified and supplemented as provided in paragraphs 3.4 and 3.5, except in the case of an emergency as provided in paragraph 6.22 and except in the case of uncovering Work as provided in paragraph 13.9.

10.4. OWNER and CONTRACTOR shall execute appropriate Change Orders (or Written Amendments) covering:

10.4.1. changes in the Work which are ordered by OWNER pursuant to paragraph 10.1, are required because of acceptance of *defective* Work under paragraph 13.13 or correcting *defective* Work under paragraph 13.14, or are agreed to by the parties;

10.4.2. changes in the Contract Price or Contract Time which are agreed to by the parties; and

10.4.3. changes in the Contract Price or Contract Time which embody the substance of any written decision rendered by ENGINEER pursuant to paragraph 9.11;

provided that, in lieu of executing any such Change Order, an appeal may be taken from any such decision in accordance with the provisions of the Contract Documents and applicable Laws and Regulations, but during any such appeal, CONTRACTOR shall carry on the Work and adhere to the progress schedule as provided in paragraph 6.29.

10.5. If notice of any change affecting the general scope of the Work or the provisions of the Contract Documents (including, but not limited to, Contract Price or Contract Time) is required by the provisions of any Bond to be given to a surety, the giving of any such notice will be CONTRACTOR's responsibility, and the amount of each applicable Bond will be adjusted accordingly.

ARTICLE 11—CHANGE OF CONTRACT PRICE

11.1. The Contract Price constitutes the total compensation (subject to authorized adjustments) payable to CONTRACTOR for performing the Work. All duties, responsibilities and obligations assigned to or undertaken by CONTRACTOR shall be at his expense without change in the Contract Price.

11.2. The Contract Price may only be changed by a Change Order or by a Written Amendment. Any claim for an increase or decrease in the Contract Price shall be based on written notice delivered by the party making the claim to the other party and to ENGINEER promptly (but in no event later than thirty days) after the occurrence of the event giving rise to the claim and stating the general nature of the claim. Notice of the amount of the claim with supporting data shall be delivered within sixty days after such occurrence (unless ENGINEER allows an additional period of time to ascertain more accurate data in support of the claim) and shall be accompanied by claimant's written statement that the amount claimed covers all known amounts (direct, indirect and consequential) to which the claimant is entitled as a result of the occurrence of said event. All claims for adjustment in the Contract Price shall be determined by ENGINEER in accordance with paragraph 9.11 if OWNER and CONTRACTOR cannot otherwise agree on the amount involved. No claim for an adjustment in the Contract Price will be valid if not submitted in accordance with this paragraph 11.2.

11.3. The value of any Work covered by a Change Order or of any claim for an increase or decrease in the Contract Price shall be determined in one of the following ways:

11.3.1. Where the Work involved is covered by unit prices contained in the Contract Documents, by application of unit prices to the quantities of the items involved (subject to the provisions of paragraphs 11.9.1. through 11.9.3, inclusive).

11.3.2. By mutual acceptance of a lump sum (which may include an allowance for overhead and profit not necessarily in accordance with paragraph 11.6.2.1).

11.3.3. On the basis of the Cost of the Work (determined as provided in paragraphs 11.4 and 11.5) plus a CONTRACTOR's Fee for overhead and profit (determined as provided in paragraphs 11.6 and 11.7).

Cost of the Work:

11.4. The term Cost of the Work means the sum of all costs necessarily incurred and paid by CONTRACTOR in the proper performance of the Work. Except as otherwise may be agreed to in writing by OWNER, such costs shall be in amounts no higher than those prevailing in the locality of the Project, shall include only the following items and shall not include any of the costs itemized in paragraph 11.5:

11.4.1. Payroll costs for employees in the direct employ of CONTRACTOR in the performance of the Work under schedules of job classifications agreed upon by OWNER and CONTRACTOR. Payroll costs for employees not employed full time on the Work shall be apportioned on the basis of their time spent on the Work. Payroll costs shall include, but not be limited to, salaries and wages plus the cost of fringe benefits which shall include social security contributions, unemployment, excise and payroll taxes, workers' or workmen's compensation, health and retirement benefits, bonuses, sick leave, vacation and holiday pay applicable thereto. Such employees shall include superintendents and foremen at the site. The expenses of performing Work after regular working hours, on Saturday, Sunday or legal holidays, shall be included in the above to the extent authorized by OWNER.

11.4.2. Cost of all materials and equipment furnished and incorporated in the Work, including costs of transportation and storage thereof, and Suppliers' field services required in connection therewith. All cash discounts shall accrue to CONTRACTOR unless OWNER deposits funds with CONTRACTOR with which to make payments, in which case the cash discounts shall accrue to OWNER. All trade discounts, rebates and refunds and all returns from sale of surplus materials and equipment shall accrue to OWNER, and CONTRACTOR shall make provisions so that they may be obtained.

11.4.3. Payments made by CONTRACTOR to the Subcontractors for Work performed by Subcontractors. If required by OWNER, CONTRACTOR shall obtain competitive bids from Subcontractors acceptable to CONTRACTOR and shall deliver such bids to OWNER who will then determine, with the advice of ENGINEER, which bids will be accepted. If a subcontract provides that the Subcontractor is to be paid on the basis of Cost of the Work Plus a Fee, the Subcontractor's Cost of the Work shall be determined in the same manner as CONTRACTOR's Cost of the Work. All subcontracts shall be subject to the other provisions of the Contract Documents insofar as applicable.

11.4.4. Costs of special consultants (including but not limited to engineers, architects, testing laboratories, surveyors, attorneys and accountants) employed for services specifically related to the Work.

11.4.5. Supplemental costs including the following:

11.4.5.1. The proportion of necessary transportation, travel and subsistence expenses of CONTRACTOR's employees incurred in discharge of duties connected with the Work.

11.4.5.2. Cost, including transportation and maintenance, of all materials, supplies, equipment, machinery, appliances, office and temporary facilities at the site and hand tools not owned by the workers, which are consumed in the performance of the Work, and cost less market value of such items used but not consumed which remain the property of CONTRACTOR.

11.4.5.3. Rentals of all construction equipment and machinery and the parts thereof whether rented from CONTRACTOR or others in accordance with rental agreements approved by OWNER with the advice of ENGINEER, and the costs of transportation, loading, unloading, installation, dismantling and removal thereof—all in accordance with terms of said rental agreements. The rental of any such equipment, machinery or parts shall cease when the use thereof is no longer necessary for the Work.

11.4.5.4. Sales, consumer, use or similar taxes related to the Work, and for which CONTRACTOR is liable, imposed by Laws and Regulations.

11.4.5.5. Deposits lost for causes other than negligence of CONTRACTOR, any Subcontractor or anyone directly or indirectly employed by any of them or for whose acts any of them may be liable, and royalty payments and fees for permits and licenses.

11.4.5.6. Losses and damages (and related expenses), not compensated by insurance or otherwise, to the Work or otherwise sustained by CONTRACTOR in connection with the performance and furnishing of the Work (except losses and damages within the deductible amounts of property insurance established by OWNER in accordance with paragraph 5.9), provided they have resulted from causes other than the negligence of CONTRACTOR, any Subcontractor, or anyone directly or indirectly employed by any of them or for whose acts any of them may be liable. Such losses shall include settlements made with the written consent and approval of OWNER. No such losses, damages and expenses shall be included in the Cost of the Work for the purpose of determining CONTRACTOR's Fee. If, however, any such loss or damage

requires reconstruction and CONTRACTOR is placed in charge thereof, CONTRACTOR shall be paid for services a fee proportionate to that stated in paragraph 11.6.2.

11.4.5.7. The cost of utilities, fuel and sanitary facilities at the site.

11.4.5.8. Minor expenses such as telegrams, long distance telephone calls, telephone service at the site, expressage and similar petty cash items in connection with the Work.

11.4.5.9. Cost of premiums for additional Bonds and insurance required because of changes in the Work and premiums for property insurance coverage within the limits of the deductible amounts established by OWNER in accordance with paragraph 5.9.

11.5. The term Cost of the Work shall not include any of the following:

11.5.1. Payroll costs and other compensation of CONTRACTOR's officers, executives, principals (of partnership and sole proprietorships), general managers, engineers, architects, estimators, attorneys, auditors, accountants, purchasing and contracting agents, expeditors, timekeepers, clerks and other personnel employed by CONTRACTOR whether at the site or in CONTRACTOR's principal or a branch office for general administration of the Work and not specifically included in the agreed upon schedule of job classifications referred to in paragraph 11.4.1 or specifically covered by paragraph 11.4.4—all of which are to be considered administrative costs covered by the CONTRACTOR's Fee.

11.5.2. Expenses of CONTRACTOR's principal and branch offices other than CONTRACTOR's office at the site.

11.5.3. Any part of CONTRACTOR's capital expenses, including interest on CONTRACTOR'S capital employed for the Work and charges against CONTRACTOR for delinquent payments.

11.5.4. Cost of premiums for all Bonds and for all insurance whether or not CONTRACTOR is required by the Contract Documents to purchase and maintain the same (except for the cost of premiums covered by subparagraph 11.4.5.9 above).

11.5.5. Costs due to the negligence of CONTRACTOR, any Subcontractor, or anyone directly or indirectly employed by any of them or for whose acts any of them may be liable, including but not limited to, the correction of *defective* Work, disposal of materials or equipment wrongly supplied and making good any damage to property.

11.5.6. Other overhead or general expense costs of any kind and the costs of any item not specifically and expressly included in paragraph 11.4.

CONTRACTOR's Fee:

11.6. The CONTRACTOR's Fee allowed to CONTRACTOR for overhead and profit shall be determined as follows:

11.6.1. a mutually acceptable fixed fee; or if none can be agreed upon,

11.6.2. a fee based on the following percentages of the various portions of the Cost of the Work:

11.6.2.1. for costs incurred under paragraphs 11.4.1 and 11.4.2, the CONTRACTOR's Fee shall be fifteen percent;

11.6.2.2. for costs incurred under paragraph 11.4.3, the CONTRACTOR's Fee shall be five percent; and if a subcontract is on the basis of Cost of the Work Plus a Fee, the maximum allowable to CONTRACTOR on account of overhead and profit of all Subcontractors shall be fifteen percent;

11.6.2.3. no fee shall be payable on the basis of costs itemized under paragraphs 11.4.4, 11.4.5 and 11.5;

11.6.2.4. the amount of credit to be allowed by CONTRACTOR to OWNER for any such change which results in a net decrease in cost will be the amount of the actual net decrease plus a deduction in CONTRACTOR's Fee by an amount equal to ten percent of the net decrease; and

11.6.2.5. when both additions and credits are involved in any one change, the adjustment in CONTRACTOR's Fee shall be computed on the basis of the net change in accordance with paragraphs 11.6.2.1 through 11.6.2.4, inclusive.

11.7. Whenever the cost of any Work is to be determined pursuant to paragraph 11.4 or 11.5, CONTRACTOR will submit in form acceptable to ENGINEER an itemized cost breakdown together with supporting data.

Cash Allowances:

11.8. It is understood that CONTRACTOR has included in the Contract Price all allowances so named in the Contract Documents and shall cause the Work so covered to be done by such Subcontractors or Suppliers and for such sums within the limit of the allowances as may be acceptable to ENGINEER. CONTRACTOR agrees that:

11.8.1. The allowances include the cost to CONTRACTOR (less any applicable trade discounts) of materials and equipment required by the allowances to be delivered at the site, and all applicable taxes; and

11.8.2. CONTRACTOR's costs for unloading and handling on the site, labor, installation costs, overhead, profit and other expenses contemplated for the allowances have been included in the Contract Price and not in the

allowances. No demand for additional payment on account of any thereof will be valid.

Prior to final payment, an appropriate Change Order will be issued as recommended by ENGINEER to reflect actual amounts due CONTRACTOR on account of Work covered by allowances, and the Contract Price shall be correspondingly adjusted.

Unit Price Work:

11.9.1. Where the Contract Documents provide that all or part of the Work is to be Unit Price Work, initially the Contract Price will be deemed to include for all Unit Price Work an amount equal to the sum of the established unit prices for each separately identified item of Unit Price Work times the estimated quantity of each item as indicated in the Agreement. The estimated quantities of items of Unit Price Work are not guaranteed and are solely for the purpose of comparison of Bids and determining an initial Contract Price. Determinations of the actual quantities and classifications of Unit Price Work performed by CONTRACTOR will be made by ENGINEER in accordance with Paragraph 9.10.

11.9.2. Each unit price will be deemed to include an amount considered by CONTRACTOR to be adequate to cover CONTRACTOR's overhead and profit for each separately identified item.

11.9.3. ~~Where the quantity of any item of Unit Price Work performed by CONTRACTOR differs materially and significantly from the estimated quantity of such item indicated in the Agreement and there is no corresponding adjustment with respect to any other item of Work and if CONTRACTOR believes that CONTRACTOR has incurred additional expense as a result thereof, CONTRACTOR may make a claim for an increase in the Contract Price in accordance with Article 11 if the parties are unable to agree as to the amount of any such increase.~~
* (See ¶SC-11.9.3 of the Supplementary Conditions

ARTICLE 12—CHANGE OF CONTRACT TIME

12.1. The Contract Time may only be changed by a Change Order or a Written Amendment. Any claim for an extension or shortening of the Contract Time shall be based on written notice delivered by the party making the claim to the other party and to ENGINEER promptly (but in no event later than thirty days) after the occurrence of the event giving rise to the claim and stating the general nature of the claim. Notice of the extent of the claim with supporting data shall be delivered within sixty days after such occurrence (unless ENGINEER allows an additional period of time to ascertain more accurate data in support of the claim) and shall be accompanied by the claimant's written statement that the adjustment claimed is the entire adjustment to which the claimant has reason to believe it is entitled as a result of the occurrence of said event. All claims for adjustment in the Contract Time shall be determined by ENGINEER in accordance with paragraph 9.11 if OWNER and CONTRACTOR cannot otherwise agree. No claim for an adjustment in the Contract Time will be valid if not submitted in accordance with the requirements of this paragraph 12.1.

12.2. The Contract Time will be extended in an amount equal to time lost due to delays beyond the control of CONTRACTOR if a claim is made therefor as provided in paragraph 12.1. Such delays shall include, but not be limited to, acts or neglect by OWNER or others performing additional work as contemplated by Article 7, or to fires, floods, labor disputes, epidemics, abnormal weather conditions or acts of God.

12.3. All time limits stated in the Contract Documents are of the essence of the Agreement. The provisions of this Article 12 shall not exclude recovery for damages (including but not limited to fees and charges of engineers, architects, attorneys and other professionals and court and arbitration costs) for delay by either party.

ARTICLE 13—WARRANTY AND GUARANTEE; TESTS AND INSPECTIONS; CORRECTION, REMOVAL OR ACCEPTANCE OF DEFECTIVE WORK

Warranty and Guarantee:

13.1. CONTRACTOR warrants and guarantees to OWNER and ENGINEER that all Work will be in accordance with the Contract Documents and will not be *defective*. ~~Prompt notice of all defects shall be given to CONTRACTOR.~~ All *defective* Work, whether or not in place, may be rejected, corrected or accepted as provided in this Article 13.
*See ¶SC-13.1 of the Supplementary Conditions. *

Access to Work:

13.2. ENGINEER and ENGINEER's representatives, other representatives of OWNER, testing agencies and governmental agencies with jurisdictional interests will have access to the Work at reasonable times for their observation, inspecting and testing. CONTRACTOR shall provide proper and safe conditions for such access.

Tests and Inspections:

13.3. ~~CONTRACTOR shall give ENGINEER timely notice of readiness of the Work for all required inspections, tests or approvals.~~ See ¶SC-13.3 of the Supplementary Conditions. *

13.4. If Laws or Regulations of any public body having jurisdiction require any Work (or part thereof) to specifically be inspected, tested or approved, CONTRACTOR shall assume full responsibility therefor, pay all costs in connection therewith and furnish ENGINEER the required certificates of inspection, testing or approval. CONTRACTOR shall also

be responsible for and shall pay all costs in connection with any inspection or testing required in connection with OWNER's or ENGINEER's acceptance of a Supplier of materials or equipment proposed to be incorporated in the Work, or of materials or equipment submitted for approval prior to CONTRACTOR's purchase thereof for incorporation in the Work. The cost of all inspections, tests and approvals in addition to the above which are required by the Contract Documents shall be paid by OWNER (unless otherwise specified).

13.5. All inspections, tests or approvals other than those required by Laws or Regulations of any public body having jurisdiction shall be performed by organizations acceptable to OWNER and CONTRACTOR (or by ENGINEER if so specified).

13.6. If any Work (including the work of others) that is to be inspected, tested or approved is covered without written concurrence of ENGINEER, it must, if requested by ENGINEER, be uncovered for observation. Such uncovering shall be at CONTRACTOR's expense unless CONTRACTOR has given ENGINEER timely notice of CONTRACTOR's intention to cover the same and ENGINEER has not acted with reasonable promptness in response to such notice.

13.7. Neither observations by ENGINEER nor inspections, tests or approvals by others shall relieve CONTRACTOR from CONTRACTOR's obligations to perform the Work in accordance with the Contract Documents.

Uncovering Work:

13.8. If any Work is covered contrary to the written request of ENGINEER, it must, if requested by ENGINEER, be uncovered for ENGINEER's observation and replaced at CONTRACTOR's expense.

13.9. If ENGINEER considers it necessary or advisable that covered Work be observed by ENGINEER or inspected or tested by others, CONTRACTOR, at ENGINEER's request, shall uncover, expose or otherwise make available for observation, inspection or testing as ENGINEER may require, that portion of the Work in question, furnishing all necessary labor, material and equipment. If it is found that such Work is *defective,* CONTRACTOR shall bear all direct, indirect and consequential costs of such uncovering, exposure, observation, inspection and testing and of satisfactory reconstruction, (including but not limited to fees and charges of engineers, architects, attorneys and other professionals), and OWNER shall be entitled to an appropriate decrease in the Contract Price, and, if the parties are unable to agree as to the amount thereof, may make a claim therefor as provided in Article 11. If, however, such Work is not found to be *defective,* CONTRACTOR shall be allowed an increase in the Contract Price or an extension of the Contract Time, or both, directly attributable to such uncovering, exposure, observation, inspection, testing and reconstruction; and, if the parties are unable to agree as to the amount or extent thereof, CONTRACTOR may make a claim therefor as provided in Articles 11 and 12.

Owner May Stop the Work:

13.10. If the Work is *defective,* or CONTRACTOR fails to supply sufficient skilled workers or suitable materials or equipment, or fails to furnish or perform the Work in such a way that the completed Work will conform to the Contract Documents, OWNER may order CONTRACTOR to stop the Work, or any portion thereof, until the cause for such order has been eliminated; however, this right of OWNER to stop the Work shall not give rise to any duty on the part of OWNER to exercise this right for the benefit of CONTRACTOR or any other party.

Correction or Removal of Defective Work:

13.11. If required by ENGINEER, CONTRACTOR shall promptly, as directed, either correct all *defective* Work, whether or not fabricated, installed or completed, or, if the Work has been rejected by ENGINEER, remove it from the site and replace it with *nondefective* Work. CONTRACTOR shall bear all direct, indirect and consequential costs of such correction or removal (including but not limited to fees and charges of engineers, architects, attorneys and other professionals) made necessary thereby.

One Year Correction Period:

13.12. If within one year after the date of Substantial Completion or such longer period of time as may be prescribed by Laws or Regulations or by the terms of any applicable special guarantee required by the Contract Documents or by any specific provision of the Contract Documents, any Work is found to be *defective,* CONTRACTOR shall promptly, without cost to OWNER and in accordance with OWNER's written instructions, either correct such *defective* Work, or, if it has been rejected by OWNER, remove it from the site and replace it with *nondefective* Work. If CONTRACTOR does not promptly comply with the terms of such instructions, or in an emergency where delay would cause serious risk of loss or damage, OWNER may have the *defective* Work corrected or the rejected Work removed and replaced, and all direct, indirect and consequential costs of such removal and replacement (including but not limited to fees and charges of engineers, architects, attorneys and other professionals) will be paid by CONTRACTOR. In special circumstances where a particular item of equipment is placed in continuous service before Substantial Completion of all the Work, the correction period for that item may start to run from an earlier date if so provided in the Specifications or by Written Amendment.
(See SC-13.12 of the Supplementary Conditions)

Acceptance of Defective Work:

13.13. If, instead of requiring correction or removal and replacement of *defective* Work, OWNER (and, prior to ENGINEER's recommendation of final payment, also ENGINEER) prefers to accept it, OWNER may do so. CONTRACTOR shall bear all direct, indirect and consequential

costs attributable to OWNER's evaluation of and determination to accept such *defective* Work (such costs to be approved by ENGINEER as to reasonableness and to include but not be limited to fees and charges of engineers, architects, attorneys and other professionals). If any such acceptance occurs prior to ENGINEER's recommendation of final payment, a Change Order will be issued incorporating the necessary revisions in the Contract Documents with respect to the Work; and OWNER shall be entitled to an appropriate decrease in the Contract Price, and, if the parties are unable to agree as to the amount thereof, OWNER may make a claim therefor as provided in Article 11. If the acceptance occurs after such recommendation, an appropriate amount will be paid by CONTRACTOR to OWNER.

OWNER May Correct Defective Work:

13.14. If CONTRACTOR fails within a reasonable time after written notice of ENGINEER to proceed to correct and to correct *defective* Work or to remove and replace rejected Work as required by ENGINEER in accordance with paragraph 13.11, or if CONTRACTOR fails to perform the Work in accordance with the Contract Documents, or if CONTRACTOR fails to comply with any other provision of the Contract Documents, OWNER may, after seven days' written notice to CONTRACTOR, correct and remedy any such deficiency. In exercising the rights and remedies under this paragraph OWNER shall proceed expeditiously. To the extent necessary to complete corrective and remedial action, OWNER may exclude CONTRACTOR from all or part of the site, take possession of all or part of the Work, and suspend CONTRACTOR's services related thereto, take possession of CONTRACTOR's tools, appliances, construction equipment and machinery at the site and incorporate in the Work all materials and equipment stored at the site or for which OWNER has paid CONTRACTOR but which are stored elsewhere. CONTRACTOR shall allow OWNER, OWNER's representatives, agents and employees such access to the site as may be necessary to enable OWNER to exercise the rights and remedies under this paragraph. All direct, indirect and consequential costs of OWNER in exercising such rights and remedies will be charged against CONTRACTOR in an amount approved as to reasonableness by ENGINEER, and a Change Order will be issued incorporating the necessary revisions in the Contract Documents with respect to the Work; and OWNER shall be entitled to an appropriate decrease in the Contract Price, and, if the parties are unable to agree as to the amount thereof, OWNER may make a claim therefor as provided in Article 11. Such direct, indirect and consequential costs will include but not be limited to fees and charges of engineers, architects, attorneys and other professionals, all court and arbitration costs and all costs of repair and replacement of work of others destroyed or damaged by correction, removal or replacement of CONTRACTOR's *defective* Work. CONTRACTOR shall not be allowed an extension of the Contract Time because of any delay in performance of the Work attributable to the exercise by OWNER of OWNER's rights and remedies hereunder.

ARTICLE 14—PAYMENTS TO CONTRACTOR AND COMPLETION

Schedule of Values:

14.1. The schedule of values established as provided in paragraph 2.9 will serve as the basis for progress payments and will be incorporated into a form of Application for Payment acceptable to ENGINEER. Progress payments on account of Unit Price Work will be based on the number of units completed.

Application for Progress Payment:

14.2. At least twenty days before each progress payment is scheduled (but not more often than once a month), CONTRACTOR shall submit to ENGINEER for review an Application for Payment filled out and signed by CONTRACTOR covering the Work completed as of the date of the Application and accompanied by such supporting documentation as is required by the Contract Documents. If payment is requested on the basis of materials and equipment not incorporated in the Work but delivered and suitably stored at the site or at another location agreed to in writing, the Application for Payment shall also be accompanied by a bill of sale, invoice or other documentation warranting that OWNER has received the materials and equipment free and clear of all liens, charges, security interests and encumbrances (which are hereinafter in these General Conditions referred to as "Liens") and evidence that the materials and equipment are covered by appropriate property insurance and other arrangements to protect OWNER's interest therein, all of which will be satisfactory to OWNER. The amount of retainage with respect to progress payments will be as stipulated in the Agreement.

CONTRACTOR's Warranty of Title:

14.3. CONTRACTOR warrants and guarantees that title to all Work, materials and equipment covered by any Application for Payment, whether incorporated in the Project or not, will pass to OWNER no later than the time of payment free and clear of all Liens.

Review of Applications for Progress Payment:

14.4. ENGINEER will, within ten days after receipt of each Application for Payment, either indicate in writing a recommendation of payment and present the Application to OWNER, or return the Application to CONTRACTOR indicating in writing ENGINEER's reasons for refusing to recommend payment. In the latter case, CONTRACTOR may make the necessary corrections and resubmit the Application. Ten days after presentation of the Application for Payment with ENGINEER's recommendation, the amount recommended will (subject to the provisions of the last sentence of paragraph 14.7) become due and when due will be paid by OWNER to CONTRACTOR.

14.5. ENGINEER's recommendation of any payment requested in an Application for Payment will constitute a

representation by ENGINEER to OWNER, based on ENGINEER's on-site observations of the Work in progress as an experienced and qualified design professional and on ENGINEER's review of the Application for Payment and the accompanying data and schedules that the Work has progressed to the point indicated; that, to the best of ENGINEER's knowledge, information and belief, the quality of the Work is in accordance with the Contract Documents (subject to an evaluation of the Work as a functioning whole prior to or upon Substantial Completion, to the results of any subsequent tests called for in the Contract Documents, to a final determination of quantities and classifications for Unit Price Work under paragraph 9.10, and to any other qualifications stated in the recommendation); and that CONTRACTOR is entitled to payment of the amount recommended. However, by recommending any such payment ENGINEER will not thereby be deemed to have represented that exhaustive or continuous on-site inspections have been made to check the quality or the quantity of the Work beyond the responsibilities specifically assigned to ENGINEER in the Contract Documents or that there may not be other matters or issues between the parties that might entitle CONTRACTOR to be paid additionally by OWNER or OWNER to withhold payment to CONTRACTOR.

14.6. ENGINEER's recommendation of final payment will constitute an additional representation by ENGINEER to OWNER that the conditions precedent to CONTRACTOR's being entitled to final payment as set forth in paragraph 14.13 have been fulfilled.

14.7. ENGINEER may refuse to recommend the whole or any part of any payment if, in ENGINEER's opinion, it would be incorrect to make such representations to OWNER. ENGINEER may also refuse to recommend any such payment, or, because of subsequently discovered evidence or the results of subsequent inspections or tests, nullify any such payment previously recommended, to such extent as may be necessary in ENGINEER's opinion to protect OWNER from loss because:

14.7.1. the Work is *defective*, or completed Work has been damaged requiring correction or replacement,

14.7.2. the Contract Price has been reduced by Written Amendment or Change Order,

14.7.3. OWNER has been required to correct *defective* Work or complete Work in accordance with paragraph 13.14, or

14.7.4. of ENGINEER's actual knowledge of the occurrence of any of the events enumerated in paragraphs 15.2.1 through 15.2.9 inclusive.

OWNER may refuse to make payment of the full amount recommended by ENGINEER because claims have been made against OWNER on account of CONTRACTOR's performance or furnishing of the Work or Liens have been filed in connection with the Work or there are other items entitling OWNER to a set-off against the amount recommended, but OWNER must give CONTRACTOR immediate written notice (with a copy to ENGINEER) stating the reasons for such action.

Substantial Completion:

14.8. When CONTRACTOR considers the entire Work ready for its intended use CONTRACTOR shall notify OWNER and ENGINEER in writing that the entire Work is substantially complete (except for items specifically listed by CONTRACTOR as incomplete) and request that ENGINEER issue a certificate of Substantial Completion. Within a reasonable time thereafter, OWNER, CONTRACTOR and ENGINEER shall make an inspection of the Work to determine the status of completion. If ENGINEER does not consider the Work substantially complete, ENGINEER will notify CONTRACTOR in writing giving the reasons therefor. If ENGINEER considers the Work substantially complete, ENGINEER will prepare and deliver to OWNER a tentative certificate of Substantial Completion which shall fix the date of Substantial Completion. There shall be attached to the certificate a tentative list of items to be completed or corrected before final payment. OWNER shall have seven days after receipt of the tentative certificate during which to make written objection to ENGINEER as to any provisions of the certificate or attached list. If, after considering such objections, ENGINEER concludes that the Work is not substantially complete, ENGINEER will within fourteen days after submission of the tentative certificate to OWNER notify CONTRACTOR in writing, stating the reasons therefor. If, after consideration of OWNER's objections, ENGINEER considers the Work substantially complete, ENGINEER will within said fourteen days execute and deliver to OWNER and CONTRACTOR a definitive certificate of Substantial Completion (with a revised tentative list of items to be completed or corrected) reflecting such changes from the tentative certificate as ENGINEER believes justified after consideration of any objections from OWNER. At the time of delivery of the tentative certificate of Substantial Completion ENGINEER will deliver to OWNER and CONTRACTOR a written recommendation as to division of responsibilities pending final payment between OWNER and CONTRACTOR with respect to security, operation, safety, maintenance, heat, utilities, insurance and warranties. Unless OWNER and CONTRACTOR agree otherwise in writing and so inform ENGINEER prior to ENGINEER's issuing the definitive certificate of Substantial Completion, ENGINEER's aforesaid recommendation will be binding on OWNER and CONTRACTOR until final payment.

14.9. OWNER shall have the right to exclude CONTRACTOR from the Work after the date of Substantial Completion, but OWNER shall allow CONTRACTOR reasonable access to complete or correct items on the tentative list.

Partial Utilization:

14.10. Use by OWNER of any finished part of the Work, which has specifically been identified in the Contract Docu-

ments, or which OWNER, ENGINEER and CONTRACTOR agree constitutes a separately functioning and useable part of the Work that can be used by OWNER without significant interference with CONTRACTOR's performance of the remainder of the Work, may be accomplished prior to Substantial Completion of all the Work subject to the following:

14.10.1. OWNER at any time may request CONTRACTOR in writing to permit OWNER to use any such part of the Work which OWNER believes to be ready for its intended use and substantially complete. If CONTRACTOR agrees, CONTRACTOR will certify to OWNER and ENGINEER that said part of the Work is substantially complete and request ENGINEER to issue a certificate of Substantial Completion for that part of the Work. CONTRACTOR at any time may notify OWNER and ENGINEER in writing that CONTRACTOR considers any such part of the Work ready for its intended use and substantially complete and request ENGINEER to issue a certificate of Substantial Completion for that part of the Work. Within a reasonable time after either such request, OWNER, CONTRACTOR and ENGINEER shall make an inspection of that part of the Work to determine its status of completion. If ENGINEER does not consider that part of the Work to be substantially complete, ENGINEER will notify OWNER and CONTRACTOR in writing giving the reasons therefor. If ENGINEER considers that part of the Work to be substantially complete, the provisions of paragraphs 14.8 and 14.9 will apply with respect to certification of Substantial Completion of that part of the Work and the division of responsibility in respect thereof and access thereto.

14.10.2. OWNER may at any time request CONTRACTOR in writing to permit OWNER to take over operation of any such part of the Work although it is not substantially complete. A copy of such request will be sent to ENGINEER and within a reasonable time thereafter OWNER, CONTRACTOR and ENGINEER shall make an inspection of that part of the Work to determine its status of completion and will prepare a list of the items remaining to be completed or corrected thereon before final payment. If CONTRACTOR does not object in writing to OWNER and ENGINEER that such part of the Work is not ready for separate operation by OWNER, ENGINEER will finalize the list of items to be completed or corrected and will deliver such list to OWNER and CONTRACTOR together with a written recommendation as to the division of responsibilities pending final payment between OWNER and CONTRACTOR with respect to security, operation, safety, maintenance, utilities, insurance, warranties and guarantees for that part of the Work which will become binding upon OWNER and CONTRACTOR at the time when OWNER takes over such operation (unless they shall have otherwise agreed in writing and so informed ENGINEER). During such operation and prior to Substantial Completion of such part of the Work, OWNER shall allow CONTRACTOR reasonable access to complete or correct items on said list and to complete other related Work.

14.10.3. No occupancy or separate operation of part of the Work will be accomplished prior to compliance with the requirements of paragraph 5.15 in respect of property insurance.

Final Inspection:

14.11. Upon written notice from CONTRACTOR that the entire Work or an agreed portion thereof is complete, ENGINEER will make a final inspection with OWNER and CONTRACTOR and will notify CONTRACTOR in writing of all particulars in which this inspection reveals that the Work is incomplete or *defective*. CONTRACTOR shall immediately take such measures as are necessary to remedy such deficiencies.

Final Application for Payment:

14.12. After CONTRACTOR has completed all such corrections to the satisfaction of ENGINEER and delivered all maintenance and operating instructions, schedules, guarantees, Bonds, certificates of inspection, marked-up record documents (as provided in paragraph 6.19) and other documents—all as required by the Contract Documents, and after ENGINEER has indicated that the Work is acceptable (subject to the provisions of paragraph 14.16), CONTRACTOR may make application for final payment following the procedure for progress payments. The final Application for Payment shall be accompanied by all documentation called for in the Contract Documents, together with complete and legally effective releases or waivers (satisfactory to OWNER) of all Liens arising out of or filed in connection with the Work. In lieu thereof and as approved by OWNER, CONTRACTOR may furnish receipts or releases in full; an affidavit of CONTRACTOR that the releases and receipts include all labor, services, material and equipment for which a Lien could be filed, and that all payrolls, material and equipment bills, and other indebtedness connected with the Work for which OWNER or OWNER's property might in any way be responsible, have been paid or otherwise satisfied; and consent of the surety, if any, to final payment. If any Subcontractor or Supplier fails to furnish a release or receipt in full, CONTRACTOR may furnish a Bond or other collateral satisfactory to OWNER to indemnify OWNER against any Lien.

Final Payment and Acceptance:

14.13. If, on the basis of ENGINEER's observation of the Work during construction and final inspection, and ENGINEER's review of the final Application for Payment and accompanying documentation—all as required by the Contract Documents, ENGINEER is satisfied that the Work has been completed and CONTRACTOR's other obligations under the Contract Documents have been fulfilled, ENGINEER will, within ten days after receipt of the final Application for Payment, indicate in writing ENGINEER's recommendation of payment and present the Application to OWNER for payment. Thereupon ENGINEER will give written notice to OWNER and CONTRACTOR that the Work is acceptable subject to the provisions of paragraph 14.16.

Otherwise, ENGINEER will return the Application to CONTRACTOR, indicating in writing the reasons for refusing to recommend final payment, in which case CONTRACTOR shall make the necessary corrections and resubmit the Application. Thirty days after presentation to OWNER of the Application and accompanying documentation, in appropriate form and substance, and with ENGINEER's recommendation and notice of acceptability, the amount recommended by ENGINEER will become due and will be paid by OWNER to CONTRACTOR. **(See SC-14.13 of the Supplementary Conditions)**

14.14. If, through no fault of CONTRACTOR, final completion of the Work is significantly delayed and if ENGINEER so confirms, OWNER shall, upon receipt of CONTRACTOR's final Application for Payment and recommendation of ENGINEER, and without terminating the Agreement, make payment of the balance due for that portion of the Work fully completed and accepted. If the remaining balance to be held by OWNER for Work not fully completed or corrected is less than the retainage stipulated in the Agreement, and if Bonds have been furnished as required in paragraph 5.1, the written consent of the surety to the payment of the balance due for that portion of the Work fully completed and accepted shall be submitted by CONTRACTOR to ENGINEER with the Application for such payment. Such payment shall be made under the terms and conditions governing final payment, except that it shall not constitute a waiver of claims.

Contractor's Continuing Obligation:

14.15. CONTRACTOR's obligation to perform and complete the Work in accordance with the Contract Documents shall be absolute. Neither recommendation of any progress or final payment by ENGINEER, nor the issuance of a certificate of Substantial Completion, nor any payment by OWNER to CONTRACTOR under the Contract Documents, nor any use or occupancy of the Work or any part thereof by OWNER, nor any act of acceptance by OWNER nor any failure to do so, nor any review and approval of a Shop Drawing or sample submission, nor the issuance of a notice of acceptability by ENGINEER pursuant to paragraph 14.13, nor any correction of *defective* Work by OWNER will constitute an acceptance of Work not in accordance with the Contract Documents or a release of CONTRACTOR's obligation to perform the Work in accordance with the Contract Documents (except as provided in paragraph 14.16).

Waiver of Claims:

14.16. The making and acceptance of final payment will constitute:

14.16.1. a waiver of all claims by OWNER against CONTRACTOR, except claims arising from unsettled Liens, from *defective* Work appearing after final inspection pursuant to paragraph 14.11 or from failure to comply with the Contract Documents or the terms of any special guarantees specified therein; however, it will not constitute a waiver by OWNER of any rights in respect of CONTRACTOR's continuing obligations under the Contract Documents; and

14.16.2. a waiver of all claims by CONTRACTOR against OWNER other than those previously made in writing and still unsettled.

ARTICLE 15—SUSPENSION OF WORK AND TERMINATION

Owner May Suspend Work:

15.1. OWNER may, at any time and without cause, suspend the Work or any portion thereof for a period of not more than ninety days by notice in writing to CONTRACTOR and ENGINEER which will fix the date on which Work will be resumed. CONTRACTOR shall resume the Work on the date so fixed. CONTRACTOR shall be allowed an increase in the Contract Price or an extension of the Contract Time, or both, directly attributable to any suspension if CONTRACTOR makes an approved claim therefor as provided in Articles 11 and 12.

Owner May Terminate:

15.2. Upon the occurrence of any one or more of the following events:

15.2.1. if CONTRACTOR commences a voluntary case under any chapter of the Bankruptcy Code (Title 11, United States Code), as now or hereafter in effect, or if CONTRACTOR takes any equivalent or similar action by filing a petition or otherwise under any other federal or state law in effect at such time relating to the bankruptcy or insolvency;

15.2.2. if a petition is filed against CONTRACTOR under any chapter of the Bankruptcy Code as now or hereafter in effect at the time of filing, or if a petition is filed seeking any such equivalent or similar relief against CONTRACTOR under any other federal or state law in effect at the time relating to bankruptcy or insolvency;

15.2.3. if CONTRACTOR makes a general assignment for the benefit of creditors;

15.2.4. if a trustee, receiver, custodian or agent of CONTRACTOR is appointed under applicable law or under contract, whose appointment or authority to take charge of property of CONTRACTOR is for the purpose of enforcing a Lien against such property or for the purpose of general administration of such property for the benefit of CONTRACTOR's creditors;

15.2.5. if CONTRACTOR admits in writing an inability to pay its debts generally as they become due;

15.2.6. if CONTRACTOR persistently fails to perform the Work in accordance with the Contract Documents

(including, but not limited to, failure to supply sufficient skilled workers or suitable materials or equipment or failure to adhere to the progress schedule established under paragraph 2.9 as revised from time to time);

15.2.7. if CONTRACTOR disregards Laws or Regulations of any public body having jurisdiction;

15.2.8. if CONTRACTOR disregards the authority of ENGINEER; or

15.2.9. if CONTRACTOR otherwise violates in any substantial way any provisions of the Contract Documents;

OWNER may, after giving CONTRACTOR (and the surety, if there be one) seven days' written notice and to the extent permitted by Laws and Regulations, terminate the services of CONTRACTOR, exclude CONTRACTOR from the site and take possession of the Work and of all CONTRACTOR's tools, appliances, construction equipment and machinery at the site and use the same to the full extent they could be used by CONTRACTOR (without liability to CONTRACTOR for trespass or conversion), incorporate in the Work all materials and equipment stored at the site or for which OWNER has paid CONTRACTOR but which are stored elsewhere, and finish the Work as OWNER may deem expedient. In such case CONTRACTOR shall not be entitled to receive any further payment until the Work is finished. If the unpaid balance of the Contract Price exceeds the direct, indirect and consequential costs of completing the Work (including but not limited to fees and charges of engineers, architects, attorneys and other professionals and court and arbitration costs) such excess will be paid to CONTRACTOR. If such costs exceed such unpaid balance, CONTRACTOR shall pay the difference to OWNER. Such costs incurred by OWNER will be approved as to reasonableness by ENGINEER and incorporated in a Change Order, but when exercising any rights or remedies under this paragraph OWNER shall not be required to obtain the lowest price for the Work performed.

15.3. Where CONTRACTOR's services have been so terminated by OWNER, the termination will not affect any rights or remedies of OWNER against CONTRACTOR then existing or which may thereafter accrue. Any retention or payment of moneys due CONTRACTOR by OWNER will not release CONTRACTOR from liability.

15.4. Upon seven days' written notice to CONTRACTOR and ENGINEER, OWNER may, without cause and without prejudice to any other right or remedy, elect to abandon the Work and terminate the Agreement. In such case, CONTRACTOR shall be paid for all Work executed and any expense sustained plus reasonable termination expenses, which will include, but not be limited to, direct, indirect and consequential costs (including, but not limited to, fees and charges of engineers, architects, attorneys and other professionals and court and arbitration costs). **(See SC-15.4 of the Supplementary Conditions)**

Contractor May Stop Work or Terminate:

15.5. If, through no act or fault of CONTRACTOR, the Work is suspended for a period of more than ninety days by OWNER or under an order of court or other public authority, or ENGINEER fails to act on any Application for Payment within thirty days after it is submitted, or OWNER fails for thirty days to pay CONTRACTOR any sum finally determined to be due, then CONTRACTOR may, upon seven days' written notice to OWNER and ENGINEER, terminate the Agreement and recover from OWNER payment for all Work executed and any expense sustained plus reasonable termination expenses. In addition and in lieu of terminating the Agreement, if ENGINEER has failed to act on an Application for Payment or OWNER has failed to make any payment as aforesaid, CONTRACTOR may upon seven days' written notice to OWNER and ENGINEER stop the Work until payment of all amounts then due. The provisions of this paragraph shall not relieve CONTRACTOR of the obligations under paragraph 6.29 to carry on the Work in accordance with the progress schedule and without delay during disputes and disagreements with OWNER.

[The remainder of this page was left blank intentionally.]

ARTICLE 16—ARBITRATION

16.1. All claims, disputes and other matters in question between OWNER and CONTRACTOR arising out of, or relating to the Contract Documents or the breach thereof (except for claims which have been waived by the making or acceptance of final payment as provided by paragraph 14.16) will be decided by arbitration in accordance with the Construction Industry Arbitration Rules of the American Arbitration Association then obtaining subject to the limitations of this Article 16. This agreement so to arbitrate and any other agreement or consent to arbitrate entered into in accordance herewith as provided in this Article 16 will be specifically enforceable under the prevailing law of any court having jurisdiction.

16.2. No demand for arbitration of any claim, dispute or other matter that is required to be referred to ENGINEER initially for decision in accordance with paragraph 9.11 will be made until the earlier of (a) the date on which ENGINEER has rendered a decision or (b) the tenth day after the parties have presented their evidence to ENGINEER if a written decision has not been rendered by ENGINEER before that date. No demand for arbitration of any such claim, dispute or other matter will be made later than thirty days after the date on which ENGINEER has rendered a written decision in respect thereof in accordance with paragraph 9.11; and the failure to demand arbitration within said thirty days' period shall result in ENGINEER's decision being final and binding upon OWNER and CONTRACTOR. If ENGINEER renders a decision after arbitration proceedings have been initiated, such decision may be entered as evidence but will not supersede the arbitration proceedings, except where the decision is acceptable to the parties concerned. No demand for arbitration of any written decision of ENGINEER rendered in accordance with paragraph 9.10 will be made later than ten days after the party making such demand has delivered written notice of intention to appeal as provided in paragraph 9.10.

16.3. Notice of the demand for arbitration will be filed in writing with the other party to the Agreement and with the American Arbitration Association, and a copy will be sent to ENGINEER for information. The demand for arbitration will be made within the thirty-day or ten-day period specified in paragraph 16.2 as applicable, and in all other cases within a reasonable time after the claim, dispute or other matter in question has arisen, and in no event shall any such demand be made after the date when institution of legal or equitable proceedings based on such claim, dispute or other matter in question would be barred by the applicable statute of limitations.

16.4. No arbitration arising out of or relating to the Contract Documents shall include by consolidation, joinder or in any other manner any other person or entity (including ENGINEER, ENGINEER's agents, employees or consultants) who is not a party to this contract unless:

16.4.1. the inclusion of such other person or entity is necessary if complete relief is to be afforded among those who are already parties to the arbitration,

16.4.2. such other person or entity is substantially involved in a question of law or fact which is common to those who are already parties to the arbitration and which will arise in such proceedings, and

16.4.3. the written consent of the other person or entity sought to be included and of OWNER and CONTRACTOR has been obtained for such inclusion, which consent shall make specific reference to this paragraph; but no such consent shall constitute consent to arbitration of any dispute not specifically described in such consent or to arbitration with any party not specifically identified in such consent.

16.5. The award rendered by the arbitrators will be final, judgment may be entered upon it in any court having jurisdiction thereof, and will not be subject to modification or appeal except to the extent permitted by Sections 10 and 11 of the Federal Arbitration Act (9 U.S.C. §§10,11).

*(See ¶SC-16 of the Supplementary Conditions)

[The remainder of this page was left blank intentionally.]

[This page was left blank intentionally.]

ARTICLE 17—MISCELLANEOUS

Giving Notice:

17.1. Whenever any provision of the Contract Documents requires the giving of written notice, it will be deemed to have been validly given if delivered in person to the individual or to a member of the firm or to an officer of the corporation for whom it is intended, or if delivered at or sent by registered or certified mail, postage prepaid, to the last business address known to the giver of the notice.

Computation of Time:

17.2.1. When any period of time is referred to in the Contract Documents by days, it will be computed to exclude the first and include the last day of such period. If the last day of any such period falls on a Saturday or Sunday or on a day made a legal holiday by the law of the applicable jurisdiction, such day will be omitted from the computation.

17.2.2. A calendar day of twenty-four hours measured from midnight to the next midnight shall constitute a day.

General:

17.3. Should OWNER or CONTRACTOR suffer injury or damage to person or property because of any error, omission or act of the other party or of any of the other party's employees or agents or others for whose acts the other party is legally liable, claim will be made in writing to the other party within a reasonable time of the first observance of such injury or damage. The provisions of this paragraph 17.3 shall not be construed as a substitute for or a waiver of the provisions of any applicable statute of limitations or repose.

17.4. The duties and obligations imposed by these General Conditions and the rights and remedies available hereunder to the parties hereto, and, in particular but without limitation, the warranties, guarantees and obligations imposed upon CONTRACTOR by paragraphs 6.30, 13.1, 13.12, 13.14, 14.3 and 15.2 and all of the rights and remedies available to OWNER and ENGINEER thereunder, are in addition to, and are not to be construed in any way as a limitation of, any rights and remedies available to any or all of them which are otherwise imposed or available by Laws or Regulations, by special warranty or guarantee or by other provisions of the Contract Documents, and the provisions of this paragraph will be as effective as if repeated specifically in the Contract Documents in connection with each particular duty, obligation, right and remedy to which they apply. All representations, warranties and guarantees made in the Contract Documents will survive final payment and termination or completion of the Agreement.

(See Article 18 - SC-18.1 through SC-18.11 of the Supplementary Conditions)

(See SC-19 of the Supplementary Conditions)

00800
SUPPLEMENTARY CONDITIONS

These Supplementary Conditions amend or supplement the Standard General Conditions of the Construction Contract (EJCDC No. 1910-8, 1983 edition) and other provisions of the Contract Documents as indicated below. All provisions which are not so amended or supplemented remain in full force and effect. The General Conditions may also be supplemented elsewhere in the Contract Documents.

The terms used in these Supplementary Conditions which are defined in the Standard General Conditions of the Construction Contract (EJCDC No. 1910-8, 1983, edition) have the meanings assigned to them in the General Conditions.

PART 1 - MODIFICATIONS AND SUPPLEMENTS TO GENERAL CONDITIONS

SC-1

Add the following to Article 1 - Definitions of the General Conditions:

Bidder -Any individual, partnership, corporation or joint venture submitting a Bid for the Work to be performed.

Resident Project Representative - The Resident Project Representative (RPR) may be assigned to the site or any part thereof on a full time basis or only on a part-time basis. This will be determined by Engineer's Agreement with Owner.

COMMENCEMENT OF CONTRACT TIME; NOTICE TO PROCEED:

SC-2.3

Delete the last sentence of paragraph 2.3. of the General Conditions and insert the following in its place:

In no event will the Contract Time commence to run later than the __120th__ day after the date of the Bid opening or the thirtieth day after the Effective Date of the Agreement, whichever date is earlier, (unless agreed otherwise by Owner and Contractor in writing).

BEFORE STARTING CONSTRUCTION:

SC-2.7

Delete paragraph 2.7. of the General Conditions in its entirety and insert the following in its place:

Before any Work at the site is started, Contractor shall deliver to Owner and Engineer certificates (and other evidence of insurance requested by Owner) which Contractor is required to purchase and maintain in accordance with the Contract Documents.

PHYSICAL CONDITIONS:

SC-4.2.1.

Delete paragraphs 4.2.1 and 4.2.2 of the General Conditions in their entirety and insert the following in their place:

4.2.1. Explorations and Reports: Reference is made to Division 1: General Requirements of the Specifications for the identification of those reports of explorations and tests of subsurface conditions at the site that have been utilized by Engineer in preparation of the Contract Documents. Contractor may rely upon the accuracy of any technical data contained in such reports that is specifically

referenced in Division 1: General Requirements as technical data that can be relied on by Contractor. Contractor may not rely upon nontechnical data, interpretations or opinions contained therein or upon the completeness thereof for Contractor's purposes. Except as indicated above and in paragraph 4.2.6, Contractor shall have full responsibility with respect to subsurface conditions at the site.

4.2.2. Existing Structures: Reference is made to Division 1: General Requirements of the Specifications for the identification of those drawings and physical conditions in or relating to existing surface and subsurface structures (except Underground Facilities referred to in paragraph 4.3) which are at or contiguous to the site that have been utilized by Engineer in preparation of the Contract Documents. Contractor may rely upon the accuracy of the technical data contained in such drawings that is specifically referenced in Division 1: General Requirements as technical data that can be relied on by Contractor. Contractor may not rely upon non-technical data contained in such drawings or upon the completeness thereof for Contractor's purposes. Except as indicated above in this paragraph and in paragraph 4.2.6, Contractor shall have full responsibility with respect to physical conditions in or relating to such structures.

PAYMENT AND PERFORMANCE BONDS

SC-5.1

Add the following after the last sentence of General Condition 5.1:

In accordance with section 255.05(1), Fla. Stat., as amended from time to time, before commencing the Work or before recommencing the Work after a default or abandonment, the Contractor shall execute and record in the public records of Palm Beach County a payment and performance bond with a surety insurer authorized to do business in the State of Florida, and the Contractor shall be required to provide to the Owner a certified copy of the recorded bond. The Owner may not make a payment to the Contractor until the Contractor has complied with section 255.05(1)(b), Fla. Stat.

CONTRACTOR'S LIABILITY INSURANCE:

SC-5.3.

The limits of liability for the insurance required by paragraph 5.3 of the General Conditions shall provide coverage for not less than the following amounts or greater where required by Laws and Regulations:

5.3.1. and 5.3.2. Worker's Compensation, etc. under paragraphs 5.3.1 and 5.3.2 of the General Conditions:

(1) State:	Statutory
(2) Applicable Federal (e.g. Longshoreman's and Harbour Workers' Compensation, Maritime, Jones Act, etc.):	Statutory
(3) Employer's Liability:	$ 1,000,000

5.3.3, 5.3.4, 5.3.5, 5.3.6. Comprehensive General Liability (under paragraphs 5.3.3 through 5.3.6 of the General Conditions):

(1) Bodily Injury (including completed operations and products liability):

$ 1,000,000	Each Occurrence
$ 3,000,000	Annual Aggregate

Property Damage:

$ 1,000,000	Each Occurrence
$ 1,000,000	Annual Aggregate
or a combined single limit of	$ 1,000,000

(2) Property Damage liability insurance will provide Explosion, Collapse and Underground coverage where applicable.

(3) Personal Injury, with employee exclusion deleted
$ 1,000,000 Annual Aggregate

5.3.7. Comprehensive Automobile Liability:
Bodily Injury:
$ 500,000 Each Person
$ 1,000,000 Each Occurrence

Property Damage:
$ 500,000 Each Occurrence
or a combined single limit of $ 1,000,000

Add new paragraphs immediately after paragraph 5.3.7 of the General Conditions which are to read as follows:

5.3.8. Umbrella Excess Liability Insurance:

(1) $ 1,000,000 Each Occurrence
$ 1,000,000 Annual Aggregate

(2) The umbrella coverage shall be Following-Form being no more restrictive than coverage required for the underlying policies.

5.3.9. The comprehensive general liability insurance and umbrella insurance required under paragraph 5.3 and SC-5.3, and the contractual liability insurance required under SC-5.4, of the General Conditions shall include Owner and Engineer as additional insureds.

5.3.10 Prior to beginning work, Contractor shall provide Owner and Engineer with its Certificates of Insurance and endorsements naming Owner and Engineer as additional insureds in accordance with the requirements of the Contract Documents.

CONTRACTUAL LIABILITY INSURANCE:

SC-5.4.

The Contractual Liability Insurance required by paragraphs 5.4 of the General Conditions shall provide coverage for not less than the following amounts:

5.4.1. Bodily Injury:
$ 1,000,000 Each Occurrence
5.4.2. Property Damage:
$ 1,000,000 Each Occurrence
$ 3,000,000 Annual Aggregate

OWNER'S LIABILITY INSURANCE:

SC-5.5.

Delete paragraph 5.5 of the General Conditions in its entirety.

PROPERTY INSURANCE:

SC-5.6.

Delete paragraph 5.6 of the General Conditions in its entirety and insert the following in its place:

Contractor shall purchase and maintain on Projects with above ground structures, property insurance upon the Work at the site to the full insurable value thereof (subject to deductible amounts as may be provided in these Supplementary Conditions or required by Laws and Regulations). This insurance shall include the interests of Owner, Contractor, Subcontractors and Engineer in the Work (all of whom shall be listed as insured or additional insured parties), shall insure against the perils of fire and extended coverage and shall include "all risk" insurance for physical loss and damage including theft, vandalism and malicious mischief, collapse and water damage, and such other perils as may be provided in these Supplementary Conditions, and shall include damages, losses and expenses arising out of or resulting from any insured loss or incurred in the repair or replacement of any insured property (including but not limited to fees and charges of engineers, architects, attorneys and other professionals). If not covered under the "all risk" insurance or otherwise provided in these Supplementary Conditions, Contractor shall purchase and maintain similar property insurance on portions of the Work stored on and off the site or in transit when such portions of the Work are to be included in an Application for Payment. The policies of insurance required to be purchased and maintained by Contractor in accordance with this paragraph 5.6 shall comply with the requirements of SC-5.8 and SC-5.9.

5.6.1. For all other Projects and portions of Projects not classified as above ground structures, Contractor shall add to the property insurance and/or maintain an Installation Floater with aggregate coverage of the total value of the Work.

5.6.2. When the Work includes the handling and installation of Owner furnished equipment, Contractor shall add to Property insurance or Installation Floater the amount of $ N/A which is the total value of the Owner furnished items.

SC-5.7.

Delete paragraph 5.7 of the General Conditions in its entirety and insert the following in its place:

5.7. Contractor shall purchase and maintain such boiler and machinery insurance or additional property insurance as may be required by these Supplementary Conditions or Laws and Regulations which shall include the interests of Owner, Contractor, Subcontractors and Engineer in the Work, all of whom shall be listed as insured or additional insured parties.

5.7.1. Boiler and Machinery Policy Required. (None required by Owner this Project)

5.7.2. Additional Property Insurance Required. (None required by Owner this Project)

SC-5.8.

Delete paragraph 5.8 of the General Conditions in its entirety and insert the following in its place:

5.8. All policies of insurance (or the certificates or other evidence thereof) required to be purchased and maintained by Contractor in accordance with paragraphs 5.3 through 5.10 shall contain the following provision or endorsements:

5.8.1. The Owner shall be the trustee of all monies received as an insured loss and shall be so named.

5.8.2. That the coverage afforded will not be cancelled or materially changed or renewal refused until at least ten days' prior written notice of cancellation for nonpayment of premium, and thirty days prior written notice for other cancellations or material changes have been given to Owner and Engineer by certified mail and shall contain waiver provisions in accordance with paragraph 5.11.2.

SC-5.9.

Delete paragraph 5.9 of the General Conditions in its entirety and insert the following in its place:

5.9. The maximum deductible amount for the insurance provided in response to paragraphs SC-5.6 and SC-5.7 shall be $ 5,000.00 . The risk of loss within the deductible amount shall be borne by

Contractor, Subcontractor or others suffering any such loss and if any of them wishes property insurance coverage within the limits of such amounts, each may purchase and maintain it at the purchaser's own expense.

SC-5.10.

Delete paragraph 5.10 of the General Conditions in its entirety.

ACCEPTANCE OF INSURANCE:

SC-5.14.

Delete paragraph 5.14 of the General Conditions in its entirety and insert the following in its place:

5.14. Owner shall review the coverage afforded by or other provisions of the insurance required to be purchased and maintained by Contractor after delivery of insurance certificates to Owner in accordance with paragraph 2.7 of the General Conditions. Contractor shall furnish to the Owner such additional information in respect of insurance provided by Contractor as the Owner may reasonably request.

5.14.1. Review of Insurance Policies or Insurance Certificates by the Owner shall not relieve or decrease the liability of the Contractor hereunder.

5.14.2. In case of the breach by Contractor of any insurance provision stated in the Contract Documents, the Owner, at his option, may take out and maintain, at the expense of the Contractor, such insurance as the Owner may deem proper and Owner may deduct the cost of such insurance from any monies which may be due or become due the Contractor under this Contract.

5.14.3. All the policies of insurance (or the certificates or other evidence thereof) required to be purchased and maintained by Contractor shall contain the name of the Project.

CONCERNING SUBCONTRACTORS, SUPPLIERS AND OTHERS:

SC-6.8.3.

Add the following paragraph to the General Conditions:

6.8.3. If the Bid Form or Specifications require (or if requested by Owner prior to the Notice of Award) the apparent Successful Bidder and any other Bidder so requested, shall submit a list of all Subcontractors, Suppliers and other persons or organizations (including those who are to furnish the principal items of material and equipment) in accordance with requirements of paragraph 10. of the Instructions to Bidders and Article 6.8.2. of the General Conditions.

SC-6.9.

Add the following language at the end of paragraph 6.9 of the General Conditions:

Owner or Engineer may furnish to any such Subcontractor, Supplier or other person or organization, to the extent practicable, evidence of amounts paid to Contractor in accordance with Contractor's Applications for Payment.

SC-6.13

When the Owner is a public agency, add the following at the end of paragraph 6.13 of the General Conditions:

Contractor shall obtain and pay for the following permits:

1. City of Lake Worth Building Permit. Include in the bid amount a 3-percent permit fee based on the bid cost. This permit fee amount will be adjusted based on the actual fee charged and the difference credited as applicable.
2. Any other permits as applicable.

INDEMNIFICATION

SC-6.30

Delete paragraph 6.30 of the General Conditions in its entirety and insert the following in its place:

Contractor shall indemnify and hold harmless Owner and Engineer and their respective officers, and employees for liabilities, damages, losses, and costs, including but not limited to, reasonable attorney's fees, to the extent caused by the negligence, recklessness, or intentional wrongful misconduct of the Contractor and persons employed or utilized by the Contractor in the performance of the construction contract.

SC-6.31

Delete paragraph 6.31 of the General Conditions in its entirety.

PROJECT REPRESENTATION:

SC-9.3.1.

Add the following paragraph to the General Conditions:

9.3.1. If the Engineer furnishes a Resident Project Representative as per Article 9.3. of the General Conditions, the duties, etc. of the representative shall be as provided in the LISTING OF THE DUTIES, RESPONSIBILITIES AND LIMITATIONS OF AUTHORITY OF THE RESIDENT PROJECT REPRESENTATIVE as included in the Project Manual. If Owner designates another agent to represent Owner at the site who is not Engineer's agent or employee, the duties, responsibilities and limitations of authority of such other agent will be as presented at the Preconstruction Conference.

REJECTING DEFECTIVE WORK

SC-9.6

Add the following after the last sentence of General Condition 9.6:

ENGINEER will also have authority to disapprove or reject Work which ENGINEER believes will not produce a completed Project that conforms to the Contract Documents or that will prejudice the integrity of the design concept of the completed Project as a functioning whole as indicated by the Contract Documents.

UNIT PRICE WORK

SC-11.9.3.

Delete paragraph 11.9.3 of the General Conditions in its entirety and substitute the following in its place:

11.9.3. Contractor may not make a claim for additional expenses incurred as a result of a difference between final quantity of any item(s) of Unit Price Work and the estimated quantity of such items(s) in the Contract Documents, unless specifically allowed in the Bid Form. Any adjustments specifically allowed shall be made in accordance with directions in the Bid Form.

WARRANTY AND GUARANTEE:

SC-13.1.

Change the second sentence of paragraph 13.1 of the General Conditions to read as follows:

Prompt notice of all observed defects shall be given to the Contractor.

TESTS AND INSPECTIONS:

SC-13.3.

Delete paragraph 13.3 of the General Conditions in its entirety and insert the following in its place:

Contractor shall give twenty-four hour notice to Engineer for all required inspections, tests or approvals, except as otherwise provided.

ONE YEAR CORRECTION PERIOD

SC-13.12

Add the following after the last sentence of General Condition 13.12:

Where defective Work (and damage to other Work resulting therefrom) has been corrected or removed and replaced, the correction period hereunder with respect to such Work will be extended for an additional period of one year after such correction or removal and replacement has been satisfactorily completed.

FINAL PAYMENT AND ACCEPTANCE

SC-14.13

Replace the last sentence of General Condition 14.13 with the following:

Thirty days after the presentation to Owner of the Application for Payment and accompanying documentation, the amount recommended by Engineer, less any sum Owner is entitled to set off against Engineer's recommendation, including but not limited to liquidated damages, will become due and will be paid by Owner to Contractor.

TERMINATION OFAGREEENT

SC-15.4

Remove General Condition 15.4 in its entirety and replace with the following:

The Owner may terminate this contract for convenience upon providing Contractor fourteen (14) days written notice of the same. If this Contract is terminated as provided herein, the Contractor shall be paid for all completed and acceptable work executed and allowable expenses incurred prior to the date of termination. Payment shall include services actually performed in full prior to termination date, but shall exclude all lost profits, direct, indirect, consequential, special damages, or other damages for the remainder of the project.

If a court of competent jurisdiction finds that the Owner wrongfully terminated this Contract, then in such event, this Contract shall be deemed terminated for convenience as provided for in this paragraph, and the Contractor shall not be entitled to damages or loss of profits, but may be entitled to all items as authorized herein.

SC-16.

Delete Article 16-ARBITRATION of the General Conditions in its entirety.

MISCELLANEOUS PROVISIONS

SC-18

Add Article 18 as follows:

SC-18.1

Controlling Law and Venue.

This Contract is to be governed by the laws of the State of Florida. The venue for any and all legal action necessary to enforce the Contract Documents will be in Palm Beach County, Florida.

SC-18.2

Headings.

Article and paragraph headings are inserted for convenience only and do not constitute parts of these General Conditions.

SC-18.3

Inspector General.

In accordance with Palm Beach County ordinance number 2011-009, the Contract Documents may be subject to investigation and/or audit by the Palm Beach County Inspector General. Contractor should review Palm Beach County ordinance number 2011-009 in order to be aware of its rights and/or obligations under such ordinance and as applicable.

SC-18.4

Enforcement Costs.

If any legal action or other proceeding is brought for the enforcement of the Contract Documents, or because of an alleged dispute, breach, default or misrepresentation in connection with any provisions of the Contract Documents, the parties agree that each party shall be responsible for its own attorney's fees.

SC-18.5

Waiver.

Failure of either party to enforce or exercise any right(s) under the Contract Documents shall not be deemed a waiver of either party's right to enforce or exercise said right(s) at any time thereafter.

SC-18.6

Jury Trial.

TO ENCOURAGE PROMPT AND EQUITABLE RESOLUTION OF ANY LITIGATION, EACH PARTY HEREBY WAIVES ITS RIGHTS TO A TRIAL BY JURY IN ANY LITIGATION RELATED TO THE CONTRACT DOCUMENTS.

SC-18.7

Independent Contractor.

The Contractor is, and shall be, in the performance of all services under this Contract, an Independent Contractor, and not an employee, agent, or servant of the Owner. All persons engaged in any of the services performed pursuant to this Contract shall at all times, and in all places, be subject to the Contractor's sole direction, supervision, and control. The Contractor shall exercise control over the means and manner in which it and its employees perform the services.

SC-18.8

Access and Audits.

The Contractor shall maintain adequate records to justify all charges, expenses, and costs incurred in estimating and performing the Work for at least five (5) years after final payment is made. The Owner shall have access to such books, records, and documents as required in this section for the purpose of inspection or audit during normal business hours, at the Contractor's place of business. In no circumstances will Contractor be required to disclose any confidential or proprietary information regarding its products and service costs.

SC-18.9

Time.

Time is of the essence in all respects under the Contract Documents.

SC-18.10

Preparation. This Contract shall not be construed more strongly against either party regardless of who was more responsible for its preparation.

SC-18.11

Representation and Binding Authority.

Contractor's representative below has full power, authority and legal right to execute and deliver these Contract Documents and perform all of its obligations under the Contract Documents. By signing the Contract Documents, the representative hereby represents to the Owner that he/she has the authority and full legal power to execute the Contract Documents and any and all documents necessary to effectuate and implement the terms of the Contract Documents on behalf of the party for whom he or she is signing and to bind and obligate such party with respect to all provisions contained in the Contract Documents.

NO DAMAGES FOR DELAY

SC-19

NO CLAIM FOR DAMAGES OR ANY CLAIM OTHER THAN FOR AN EXTENSION OF TIME SHALL BE MADE OR ASSERTED AGAINST OWNER BY REASON OF ANY DELAYS. Contractor shall not be entitled to an increase in the Contract Price or payment or compensation of any kind from Owner for direct, indirect, consequential, impact or other costs, expenses, or damages, including, but not limited to, costs of acceleration or inefficiency, arising because of delay, disruption, interference, or hindrance be reasonable or unreasonable, foreseeable, or avoidable or unavoidable. Contractor shall be entitled only to extensions of the Contract Time as the sole and exclusive remedy for such resulting delays, in accordance with and to the extent specifically provided herein.

PART 2 - ADDITIONAL SUPPLEMENTARY CONDITIONS

1. ATTACHMENTS:

The following forms included in the Project Manual shall be used by Contractor for submittals required by the Contract Documents (unless Owner accepts other form):

a. Construction Performance Bond (00610).

b. Construction Payment Bond (00620).
c. Notice of Compliance with Chapter 556, Florida Statutes (00630).

d. Contractor's Affidavit to Owner (00670).

e. Form of Application for Payment (00680).

f. This space left blank intentionally.

2. DESIGN PROFESSIONALS REPRESENTING OWNER AND/OR ENGINEER AND DIVISION OF RESPONSIBILITIES

a. Various Design Professionals (i.e. Civil, Structural, Mechanical, Electrical, Groundwater Hydrology, Environmental, Landscape Architect, Architect, etc.) as consultants to Owner and/or Engineer, prepared or assisted in the preparation of Drawings and Specifications for the Project. The Owner and/or Engineer may have the various Design Professionals provide services during construction phase of the Project. The Design Professionals will be representatives of the Owner and/or Engineer. Visits to the site by the Design Professionals will be on the basis of General Conditions Paragraph 9.2, VISITS TO SITE. Also General Conditions Paragraphs 9.13 through 9.16, LIMITATIONS ON ENGINEER'S RESPONSIBILITIES includes the various Design Professionals for this Project.

b. Communication to and from the various Design Professionals will be coordinated through the Engineer.

END OF SECTION

00820
SPECIAL CONDITIONS

CITY OF LAKE WORTH PURCHASING DEPARTMENT REQUIREMENTS

SPC-1 APPROVAL OF ACCOUNTING SYSTEM

Except with respect to firm fixed-price contracts, no contract type shall be used unless the Purchasing Manager has determined in writing that:

1) The proposed contractor's accounting system will permit timely development of all necessary cost data in the form required by the specific contract type contemplated; and

2) The proposed contractor's accounting system is adequate to allocate costs in accordance with generally accepted cost accounting principles.

SPC-2 RIGHT TO INSPECT PLANT

The City may, at reasonable times, inspect any part of the plant, place of business, or work site of a contractor or subcontractor which is pertinent to the performance of any contact awarded or to be awarded by the City.

SPC-3 RIGHT TO AUDIT RECORDS

1) Audit of Cost or Pricing Data: The City may, at reasonable times and places audit the books, documents, papers and records of any contractor who has submitted cost or pricing data to the extent that such books, documents, papers and records are pertinent to such cost or pricing data. Any person who receives a contract, change order or contract modifications for which cost or pricing data is required, shall maintain such books, documents, papers and records that pertinent to such costs or pricing data for three (3) years from the data of the final payment under the contract.

2) Contract Audit: The City shall be entitled to audit the books, documents, papers and records of a contractor or a subcontractor at any tier under any negotiated contract or subcontract other than a firm fixed-price contract to the extent that such books, documents, papers and records are pertinent to the performance of such contract or subcontract. Such books, documents, papers and records shall be maintained by the contractor for a period of three (3) years from the date of final payment under the prime contract and by the subcontractor for a period of three (3) years from the date of final payment under the subcontract.

3) Contractor Records: If a contract is being funded in whole or in part by assistance from a federal agency, then the contract shall include provisions:

   A) Requiring the contractor and subcontractor at any tier to maintain for three (3) years from the date of final payment under the contract all books, documents, papers and records pertinent to the contract; and

B) Requiring the contractor and subcontractor at any tier to provide to the City, the federal grantor agency, the Comptroller General of the United States, or any of their duly authorized representatives access to such books, documents, papers and records for the purposes of examining. Auditing and copying them.

SPC-4 LOCAL VENDOR PREFERENCE

In the event the lowest responsive, responsible bidder or the highest ranked responsive, responsible proposer in the procurement of goods, services or construction is a non-LOCAL business, then all bids and or proposals from responsive, responsible LOCAL businesses to the same solicitation shall be adjusted by five (5) percent, solely for the purpose of determining bid/contract award. The bid price of LOCAL bidders will be adjusted downward by five (5) percent for purposes of ranking of bidders.

In no event, shall the application of this adjustment to a responsive quote or bid change the actual bid amount. Further, it will not cause the City to pay more than $15,000 above the amount bid by that non-local vendor, which would have been recommended for award if the local vendor preference had not been applied.

If the application of the five-percent local vendor preference causes the *evaluated local vendor price* to be less than the actual low-bid price, but the actual bid price of the local vendor is more than $15,000 higher than the actual low-bid price of a non-local vendor, then the non-local vendor submitting the actual low-bid, shall be viewed as the low-bidder, and be recommended for award, unless for reasons other than price, the bid is not found to be responsive and/or responsible.

The determination as to whether a bidder or proposer is a local or non-local business shall be made by the Purchasing Division, after confirming the vendor has a valid business tax receipt and certificate of occupancy, as reflected within the Business Master File of the city's ERP system. The bidder or proposer does not have to be a current vendor to the City (City as a customer) at the time of bidding/proposing, but must have been issued a business tax receipt applicable to the goods/services/ construction being requested, PRIOR to the due date/time for bids/proposals. Prior to making an award through the application of the local vendor preference, city staff may require a bidder or proposer to provide additional information at any time prior to the award.

A *LOCAL business*, for the purposes of the application of a local vendor preference, means a bidder or proposer which has a permanent, physical place of business within the city limits, and a valid business tax receipt applicable to the required goods, services, or construction items being procured. Post office boxes or locations at a postal service center are not verifiable and shall not be used for the purpose of establishing said physical address. If the business is a joint venture/partnership, it is sufficient for qualification as a LOCAL business if at least one party of the joint venture/partnership meets the test set forth in this Section.

Non-LOCAL business means a bidder or proposer which is not a LOCAL business as defined herein.

Permanent place of business means headquarters which are located within the city limits or a permanent office or other site located within the city limits from which a bidder or proposer will produce a substantial portion of the goods or perform a substantial portion of the services to be purchased. A post office box or location at a postal service center shall not constitute a permanent place of business.

SPC-5 CONTRACTOR'S START OF WORK & CHANGE OF SCOPE

1) The Contractor shall not perform work without a Purchase Order.

2) The Contractor shall not work out of scope without a signed, issued change order to the purchase order, authorizing the additional work and any change to the period of performance (Construction Contract Time).

SPC-6 APPROPRIATION OF FUNDS

This project is subject to approval and appropriation of funds by the City of Lake Worth Commission.

SPC-7 BUILDING PERMIT FEE

A building permit fee equal to 3-percent of the accepted bid shall be included in the project costs. See Supplemental Conditions paragraph SC-6.13 for further details.

00840
LISTING OF THE DUTIES, RESPONSIBILITIES AND LIMITATIONS OF AUTHORITY OF THE RESIDENT PROJECT REPRESENTATIVE

ENGINEER may furnish a Resident Project Representative (RPR), assistants and other field staff to assist ENGINEER in observing performance of the Work of the Contractor. RPR may only be part time on site, and CONTRACTOR shall coordinate with RPR as required in the Contract Documents.

Through on-site observations of the Work in progress and field checks of materials and equipment by the RPR and assistants, ENGINEER shall endeavor to provide further protection for OWNER against defects and deficiencies in the Work; but, the furnishing of such services will not make ENGINEER responsible for or give ENGINEER control over construction means, methods, techniques, sequences or procedures or for safety precautions or programs, or responsibility for CONTRACTOR's failure to perform the Work in accordance with the Contract Documents.

The duties and responsibilities of the RPR are limited to those of ENGINEER in ENGINEER's agreement with the OWNER and in the construction Contract Documents, and are further limited and described as follows:

A. GENERAL

RPR is ENGINEER's agent at the site, will act as directed by and under the supervision of ENGINEER, and will confer with ENGINEER regarding RPR's actions. RPR's dealings in matters pertaining to the on-site work shall in general be with ENGINEER and CONTRACTOR keeping OWNER advised as necessary. RPR's dealings with subcontractors shall only be through or with the full knowledge and approval of CONTRACTOR. RPR shall generally communicate with OWNER with the knowledge of and under the direction of ENGINEER.

B. DUTIES AND RESPONSIBILITIES OF RPR

1. SCHEDULES: Review the progress schedule, schedule of Shop Drawing submittals and schedule of values prepared by CONTRACTOR and consult with ENGINEER concerning acceptability.

2. CONFERENCES AND MEETINGS: Attend meetings with CONTRACTOR, such as preconstruction conferences, progress meetings, job conferences and other project-related meetings, and prepare and circulate copies of minutes thereof.

3. LIAISON:

   a. Serve as ENGINEER's liaison with CONTRACTOR, working principally through CONTRACTOR's superintendent and assist in understanding the intent of the Contract Documents; and assist ENGINEER in serving as OWNER's liaison with CONTRACTOR when CONTRACTOR's operations affect OWNER's on-site operations.

   b. Assist in obtaining from OWNER additional details or information, when required for proper execution of the Work.

4. SHOP DRAWINGS AND SAMPLES:

   a. Record date of receipt of Shop Drawings and samples.

   b. Receive samples which are furnished at the site by CONTRACTOR, and notify ENGINEER of availability of samples for examination.

c. Advise ENGINEER and CONTRACTOR of the commencement of any Work requiring a Shop Drawing or sample if the submittal has not been approved by ENGINEER.

5. REVIEW OF WORK, REJECTION OF DEFECTIVE WORK, INSPECTIONS AND TESTS:

a. Conduct on-site observations of the Work in progress to assist ENGINEER in determining if the Work is in general proceeding in accordance with the Contract Documents.

b. Report to ENGINEER whenever RPR believes that any Work is unsatisfactory, faulty or defective or does not conform to the Contract Documents, or has been damaged, or does not meet the requirements of any inspection, test or approval required to be made; and advise ENGINEER of Work that RPR believes should be corrected or rejected or should be uncovered for observation, or requires special testing, inspection or approval.

c. Verify that tests, equipment and systems startups and operating and maintenance training are conducted in the presence of appropriate personnel, and that CONTRACTOR maintains adequate records thereof; and observe, record and report to ENGINEER appropriate details relative to the test procedures and startups.

d. Accompany visiting inspectors representing public or other agencies having jurisdiction over the Project, record the results of these inspections and report to ENGINEER.

6. INTERPRETATION OF CONTRACT DOCUMENTS: Report to ENGINEER when clarifications and interpretations of the Contract Documents are needed and transmit to CONTRACTOR clarifications and interpretations as issued by ENGINEER.

7. MODIFICATIONS: Consider and evaluate CONTRACTOR's suggestions for modifications in Drawings or Specifications and report with RPR's recommendations to ENGINEER. Transmit to CONTRACTOR decisions as issued by ENGINEER.

8. RECORDS:

a. Maintain at the job site or ENGINEER's office files for correspondence, reports of job conferences, Shop Drawings and samples, reproductions of original Contract Documents including all Work Directive Changes, Addenda, Change Orders, Field Orders, additional Drawings issued subsequent to the execution of the Contract, ENGINEER's clarifications and interpretations of the Contract Documents, progress reports, and other Project related documents.

b. Record names, addresses and telephone numbers of all CONTRACTORS, subcontractors and major suppliers of materials and equipment.

9. REPORTS:

a. Furnish ENGINEER periodic reports as required of progress of the Work and of CONTRACTOR's compliance with the progress schedule and schedule of Shop Drawing and sample submittals.

b. Consult with ENGINEER in advance of scheduled major tests, inspections or start of important phases of the Work.

c. Draft proposed Change Orders and Work Directive Changes, obtaining backup material from CONTRACTOR and recommend to ENGINEER Change Orders, Work Directive Changes, and Field Orders.

d. Report immediately to ENGINEER and OWNER upon the occurrence of any accident witnessed by RPR or that was otherwise made known to RPR.

10. PAYMENT REQUESTS: Review applications for payment with CONTRACTOR for compliance with the established procedure for their submission and forward with recommendations to

ENGINEER, noting particularly the relationship of the payment requested to the schedule of values, Work completed and materials and equipment delivered at the site but not incorporated in the Work.

11. CERTIFICATES, MAINTENANCE AND OPERATION MANUALS: During the course of the Work, verify that certificates, maintenance and operation manuals and other data required to be assembled and furnished by CONTRACTOR are applicable to the items actually installed and in accordance with the Contract Documents, and have this material delivered to ENGINEER for review and forwarding to OWNER prior to final payment for the Work.

12. COMPLETION:

a. Before ENGINEER issues a Certificate of Substantial Completion, submit to CONTRACTOR a list of observed items requiring completion or correction.

b. Conduct final inspection in the company of ENGINEER, OWNER and CONTRACTOR and prepare a final list of items to be completed or corrected.

c. Observe that all items on final list have been completed or corrected and make recommendations to ENGINEER concerning acceptance.

C. LIMITATIONS OF AUTHORITY

Resident Project Representative:

1. Shall not authorize any deviation from the Contract Documents or substitution of materials or equipment, unless authorized by ENGINEER.

2. Shall not exceed limitations of ENGINEER's authority as set forth in the Contract Documents.

3. Shall not undertake any of the responsibilities of CONTRACTOR, subcontractors or CONTRACTOR's superintendent.

4. Shall not advise on, issue directions relative to or assume control over any aspect of the means, methods, techniques, sequences or procedures of construction unless such advice or directions are specifically required by the Contract Documents.

5. Shall not advise on, issue directions regarding or assume control over safety precautions and programs in connection with the Work.

6. Shall not accept Shop Drawing or sample submittals from anyone other than Contractor.

7. Shall not authorize OWNER to occupy the Project in whole or in part.

8. Shall not participate in specialized field or laboratory tests or inspections conducted by others except as specifically authorized by ENGINEER.

END OF SECTION

00860
LIST OF DRAWINGS

The Drawings which form a part of the Contract Documents and show the Work to be performed are as follows:

Drawing Title	Drawing Number	No. of Sheets	Dated
Potable Well No. 12 Reconstruction	44-48-28-302	5	October 2014

ENGINEER'S PROJECT NO. B4015 PROJECT: Potable Well No. 12 Reconstruction for City of Lake Worth

DATE: December 10, 2014

ADDENDUM NO. 1

TO: ALL PROSPECTIVE BIDDERS

Pursuant to the Invitation to Bid on this Project, you are instructed to make the following modifications to the Project Contract Documents, which modifications shall constitute a portion of the Contract Documents and be an integral part of the Project:

PROJECT MANUAL

(1) Section 11213, Revise paragraph 1.05.E to read "Total pump head at design capacity – 106 feet".

(2) Section 11213, paragraph 2.02 Materials, A.6., Allow alternate material for the impellers and bowl assembly to be 316 stainless steel

/s/ MOCK, ROOS ASSOCIATES, INC.

END OF ADDENDUM NO. 1

ENGINEER'S PROJECT NO. B4015 PROJECT: Potable Well No. 12 Reconstruction for City of Lake Worth

DATE: December 11, 2014

ADDENDUM NO. 2

TO: ALL PROSPECTIVE BIDDERS

Pursuant to the Invitation to Bid on this Project, you are instructed to make the following modifications to the Project Contract Documents, which modifications shall constitute a portion of the Contract Documents and be an integral part of the Project:

PROJECT MANUAL – TECHNICAL SPECIFICATIONS

(1) Add Section 03001 CONCRETE to the Specifications.

/s/ MOCK, ROOS ASSOCIATES, INC.

END OF ADDENDUM NO. 2

SECTION 03001

CONCRETE

PART 1 GENERAL

1.01 SECTION INCLUDES

A. Formwork.

B. Concrete reinforcement and accessories.

C. Cast-in-place concrete.

D. Pre-cast concrete.

1.02 REFERENCES

A. ACI 301-96 - Specifications for Structural Concrete.

B. ACI 318-99 - Building Code Requirements for Structural Concrete.

C. ACI SP-4 (95) – Formwork for Concrete.

D. ASTM A185-97 – Steel Welded Wire Fabric, Plain, for Concrete Reinforcement.

E. ASTM A615-01 - Deformed and Plain Billet Steel for Concrete Reinforcement.

F. ASTM A775-01 – Epoxy - Coated Reinforcing Steel Bars.

G. ASTM C31-00 - Making and Curing Concrete Test Specimens in the Field.

H. ASTM C33-01 - Concrete Aggregates.

I. ASTM C39-01 - Compressive Strength of Cylindrical Concrete Specimens.

J. ASTM C42-99 - Obtaining and Testing Drilled Cores and Sawed Beams of Concrete.

K. ASTM C94-00 - Ready-Mixed Concrete.

L. ASTM C143-00 - Slump of Hydraulic Cement Concrete.

M. ASTM C150-00 - Portland Cement.

N. ASTM C192-90 - Making and Curing Concrete Test Specimens in the Laboratory.

O. ASTM C260-01 - Air-Entraining Admixtures for Concrete.

P. ASTM C309-98 - Liquid Membrane - Forming Compounds for Curing Concrete.

Q. ASTM D1751-99 - Preformed Expansion Joint Filler for Concrete Paving and Structural Construction.

1.03 SUBMITTALS

A. Four copies of the test mix report showing the proportions of cement, aggregate, fine aggregate, water and admixtures.

B. Shop Drawings of pre-cast structures for review prior to fabrication.

PART 2 PRODUCTS

2.01 FORM MATERIALS

A. Conform to ACI 347.

2.02 REINFORCING STEEL

A. Reinforcing Bars: ASTM A615, Grade 60, new deformed billet steel.

B. Welded Wire Fabric: Plain type, ASTM A185.

C. Stirrups and Ties: ASTM A615, Grade 40 or Grade 60.

D. Bar Supports and Spacers: Steel wire with upturned legs. Mortar cubes.

E. Epoxy - Coated Reinforcing Bars: ASTM A775, Grade 60, new deformed billet steel.

2.03 CONCRETE MATERIALS

A. Cement: ASTM C150, Type I. Type II cement for wastewater structures.

B. Fine and Coarse Aggregates: ASTM C33.

Nominal maximum size of coarse aggregate not larger than:

1 The narrowest dimension between sides of forms, nor
2. 1/3 the depth of slabs, nor
3. 3/4 the minimum clear spacing between individual reinforcing bars or wires, bundles of bars, or ducts.
4. 4 inches.

C. Water: Clean, fresh, and free from injurious amounts of oils, acids, alkalis, salts, organic materials, or other substances that may be deleterious to concrete or reinforcement.

D. Air Entrainment Admixtures: ASTM C260. 'Darex' by the W. R. Grace Company or approved equal.

E. Curing Compound: ASTM C309, Type 1 or Type 1-D, Class A.

2.04 CONCRETE MIX

A. Mix concrete in accordance with ASTM C94.

B. Compressive Strength: 3000 psi minimum at 28 days for cast-in-place concrete and 4000 psi minimum at 28 days for pre-cast concrete (unless otherwise noted on Drawings).

C. Slump: 5 inches maximum (Vertical Pours)
3 inches maximum (Horizontal Pours)
2 inches minimum (Unless noted otherwise i.e. tremie, curb machine)

D. Mixing water not to exceed 6 gallons per sack of Portland Cement. This includes water entering the batches as surface moisture on the aggregates, which must be deducted from the specified 6 gallons to determine the amount of mixing water for each batch.

E. Contain not less than 5 sacks of cement per cubic yard of concrete for 3000 psi concrete and not less than 6 sacks of cement per cubic yard of concrete for 4000 psi concrete.

F. Air-Entraining admixture to produce 5 percent (+/- 1.5%) entrained air.

PART 3 EXECUTION

3.01 FORMWORK ERECTION

A. Conforms to the shapes, lines, and dimensions of the members as called for on the Drawings.

B. Provide bracing to ensure stability of formwork.

C. Design and construct forms, bracing, and supports to withstand the pressure of freshly placed concrete without bow or deflection.

D. Hand trim sides and bottom of earth forms; remove loose dirt.

E. Coordinate Work on Drawings in forming and setting openings, recesses, chases, sleeves, bolts, anchors, and other inserts.

F. Substantial and sufficiently tight to prevent leakage of mortar. Check forms prior to placing concrete and tighten as required to produce flush surfaces.

G. Tie metal remaining in the concrete to be at least 3 inches back of the concrete face. Plug holes left by the tie ends with grout.

H. Chamfer corners of beams, columns, walls and exposed edges or corners of concrete with 3/4 inch by 3/4 inch wood chamfer strips unless otherwise shown on Drawings.

I. Clean forms and apply form release agents or wet forms prior to concrete placement.

J. Remove forms in such a manner as to insure the complete safety of the structure. Where the structure as a whole is supported on shores, the removable floor forms, beams and girder sides, columns and similar vertical forms may be removed only after concrete has reached 2/3 of its design strength by test and is sufficiently hard not to be injured during form removal. In no case should supporting forms or shoring be removed until the members have acquired sufficient strength to support their weight and the load safely thereon.

3.02 REINFORCEMENT

A. Before placing concrete, clean reinforcement of foreign particles or coatings.

B. Place, support, and secure reinforcement against displacement.

C. Lap welded wire mesh at least one full mesh and lace splices with wire. Offset end laps in adjacent widths to prevent continuous laps in either direction.

D. Avoid splices at points of maximum stress. Provide sufficient lap to transfer the stress between bars by bond and shear.

E. Make bends for stirrups and ties on bars 5/8 inches in diameter and less, around a pin having a diameter not less than four times the thickness of the bar. Make bends for other bars around a pin having a diameter not less than six times the minimum thickness of the bar, except that for bars larger than one inch but less than 1-3/4 inches, the pin can not be less than eight times the minimum thickness of the bar. Bend all bars cold.

F. Splices and Offsets in Reinforcement: In slabs, beams, and girders, avoid splices of reinforcement at points of maximum stress. Provide sufficient lap to transfer the stress between bars by bond and shear and meet the requirements of ACI 318.

Where changes in the cross section of a column occur, offset the longitudinal bars in a region where lateral support is afforded. Where offset, the slope of the inclined portion should not be more than one in six, and in the case of tied columns, space the ties not more than 3 inches on center for a distance of one foot below the actual point of offset.

G. Protection of Reinforcement: Protect the metal reinforcement by the thickness of concrete indicated on the Drawings. Where not otherwise shown, the thickness of concrete over the reinforcement should be as follows:

Where concrete is deposited against ground without the use of forms, not less than 3 inches for beams and slabs.

Where concrete is exposed to the weather or exposed to the ground but placed in forms, not less than 2 inches for bars more than 5/8 inch in diameter and 1-1/2 inches for bars 5/8 inch or less in diameter.

In slabs and walls not exposed to the ground or to the weather, not less than 1-1/2 inches.
In beams, girders and columns not exposed to the ground or to the weather, not less than 1-1/2 inches.

In all cases, the thickness of concrete over the reinforcement must be at least 1-1/2 inches.

H. Protect reinforcement bars, intended for bonding with future extensions, with approved adequate covering.

3.03 JOINTS

A. Expansion and Contraction Joints: Provide expansion joints when slabs on grade join other construction and elsewhere as indicated. Expansion joints are to be one-half (1/2) inch thick when not otherwise noted. Tool edges of slabs at expansion and contraction joints to a one-fourth (1/4) inch radius.

B. Construction Joints: In jointing fresh concrete to that which has already set, the surface of the concrete in place must be thoroughly cleaned and have all laitance removed by cutting with a suitable tool. In addition, wet and slush with a coat of grout, no leaner than one (1) part cement to two (2) parts sand.

3.04 CONCRETE MIXING

A. Mix until there is a uniform distribution of the materials and discharge completely before the mixer is recharged.

B. For job-mixed concrete, rotate the mixer at a speed recommended by the manufacturer and mix continuously for at least one minute after all materials are in the mixer.

C. Mix and deliver ready-mixed concrete in accordance with ASTM C-94.

D. Wet batches of concrete may be transported in either agitating or nonagitating trucks. When non-agitator trucks are used, the elapsed time between the addition of water to the mix and depositing the concrete in place must not exceed 45 minutes except that when a retardant admixture is used such elapsed time must not exceed 75 minutes. When the handling is done in truck agitators, such elapsed time must not exceed 60 minutes, except that when a retardant admixture is used a maximum elapsed time of 90 minutes will be permitted.

E. When concrete arrives on site with slump below that suitable for placing, as indicated by the Specifications, water may be added only if neither the maximum permissible water-cement ratio nor the maximum slump is exceeded.

3.05 PLACING CONCRETE

A. Notify Engineer a minimum of 24 hours prior to commencement of concreting operations.

B. Equipment for chuting, pumping and pneumatically conveying concrete must be sized and designed as to insure a practically continuous flow of concrete at the delivery end without separation of the materials.

C. Prevent separation or loss of materials when conveying concrete from mixer to place of final deposit.

D. No concrete that has partially hardened or been contaminated by foreign material may be deposited on the Work nor retempered.

E. Deposit as nearly as practicable to its final position to avoid segregation due to rehandling or flowing.

F. During placement, thoroughly work concrete around reinforcement and embedded fixtures and into the corners of the forms.

G. At all times, concrete is to be plastic and flow readily into the space between the bars.

When concreting is once started, carry on as a continuous operation until the placing of the panel or section is completed. The top surface to be generally level.

H. Consolidate placed concrete by mechanical vibrating equipment supplemented by hand-spading, rodding or tamping. Use vibrators designed to operate with vibratory element submerged in concrete.

3.06 UNDER-WATER PLACING (Done only on approval of Engineer)

A. When conditions require placing through water, a tremie or drop-bottom bucket should be used and the Work must be well supervised. Every precaution must be taken to prevent the cement from washing out of the concrete. The tremie is to be water-tight and large enough to allow a free flow of concrete. It must be kept filled with concrete at all times while depositing. Discharge concrete and spread by moving the tremie as to maintain as nearly as practicable a uniform flow and avoid dropping the concrete through water. If the charge is lost while depositing, the tremie must be withdrawn and refilled. Maintain concrete slump between 6 and 7 inches. Tremie concrete must be pumped into place instead of gravity placed.

3.07 COLD WEATHER PLACEMENT

A. Provide adequate equipment for heating the concrete materials and protecting the concrete during freezing or near-freezing weather. No frozen materials or materials containing ice can be used.

B. All concrete materials and all reinforcement, forms, fillers and ground with which the concrete is to come in contact must be free from frost. Whenever the temperature of the surrounding air is below 40 degrees F, all concrete placed in the forms must have a temperature of between 70 degrees F and 80 degrees F, and adequate means to provide for maintaining a temperature of not less than 70 degrees F for 3 days or 50 degrees F for 5 days. The housing covering or other protection used in connection with curing must remain in place and intact at least 24 hours after the artificial heating is discontinued. No dependence can be placed on salt or other chemicals for the prevention of freezing.

3.08 HOT WEATHER PLACEMENT

A. Cool ingredients before mixing to maintain concrete temperature at time of placement below 90 degrees F. Mixing water may be chilled, or chopped ice may be used to control the concrete

temperature, provided the water equivalent of the ice is calculated to the total amount of mixing water.

B. A shorter mixing time than specified in ASTM C94 may be required. When the air temperature is between 85 and 90 degrees F, reduce the mixing and delivery time from 90 minutes to 75 minutes, and when the air temperature is above 90 degrees F, reduce the mixing and delivery time to 60 minutes.

Cover reinforcing steel with water-soaked burlap if it becomes too hot, so that the steel temperature will not exceed the ambient air temperatures immediately before embedment in concrete. Wet forms thoroughly before placing concrete.

Do not use retarding admixtures without the written approval of the Engineer.

3.09 FINISHING CONCRETE

A. Rough finish for concrete surfaces not exposed to view in the finish Work or covered by other construction.

B. Strike - off smooth and finish with a texture matching adjacent formed surfaces at tops of walls, horizontal offsets and similar unformed surfaces occurring adjacent to formed surfaces.

C. Provide a uniform smooth rubbed finish on exposed formed concrete walls, columns, and beams.

D. Float finish monolithic slab surfaces that are to receive trowel finish or other finish.

1. Trowel Finish: After floating, begin first trowel finish operation using a power-driven trowel. Begin final troweling when surface produces a ringing sound as trowel is moved over surface. Consolidate concrete surface by final hand-troweling operation, free of trowel marks, uniform in texture and appearance, and with a surface plane tolerance not exceeding 1/4" in 10 feet when tested with a 10 foot straight-edge. Grind smooth surface defects which would show through applied floor covering system.

2. Non-slip Broom Finish: Apply non-slip fine-hair broom finish to sidewalks, driveways, handicap ramps, curbs, or other items as noted on the Drawings.

3.10 CURING

A. Protect freshly placed concrete from premature drying or heat, and maintain without drying at a relatively constant temperature for a period of time necessary for hydration of cement and proper hardening.

B. Start initial curing as soon as free water has disappeared from concrete surface after placing and finishing. Weather permitting, keep continuously moist for not less than 72 hours.

C. Continue curing for a least 7 days and in accordance with ACI 301 procedures. Avoid rapid drying at end of final curing period.

D. In lieu of moist curing, spray a clear liquid membrane curing compound on all new concrete immediately after initial set. Rate of application to be 200 square feet per gallon or as recommended by the manufacturer.

3.11 TESTS

A. Testing and analysis of concrete will be performed by an independent testing laboratory.

B. Test firm will take cylinders and perform compression tests in accordance with ASTM C31, ASTM C39, and ASTM C192.

C. Number of cylinders and frequency of tests will be designated by the Engineer.

D. One slump test will be performed per ASTM C143 for each set of test cylinders taken.

E. Cure specimens under laboratory conditions except that when in the opinion of the Engineer, there is a possibility of the surrounding air temperature falling below 40 degrees F., additional specimens may be required and cured under job conditions.

F. If the average strength of the laboratory control cylinders for any portion of the structure falls below the compressive strengths called for on the Drawings, the Engineer has the right to order a change in the proportions or the water content for the remaining portion of the structure. If the average strength of the job-cured cylinders falls below the required strength the Engineer has the right to require conditions of temperature and moisture necessary to secure the required strength and may require tests in accordance with ASTM C42, or order load tests to be made on the portions of the structure so affected. Remove or replace failing concrete if directed by the Engineer.

3.12 PROTECTION

A. Protect concrete from damage until final acceptance of Work.

END OF SECTION

SPECIFICATIONS
TABLE OF CONTENTS

SECTION NUMBER	TITLE	NO. OF PAGES
DIVISION 1 - GENERAL REQUIREMENTS		
01000	General Requirements	5
01010	Summary of Work	3
01025	Measurement and Payment	6
01720	Record Documents	3
DIVISION 2 - SITE WORK		
02118	Video Taping of Existing Conditions	2
02613	Ductile Iron Pipe	4
02644	Check Valves	1
02715	Construction Facilities and Temporary Controls (Specs by JLA Geosciences, Inc)	4
02720	Well Construction Sequence (Specs by JLA Geosciences, Inc).	3
02740	Well Drilling (Specs by JLA Geosciences, Inc).	4
02745	Welling Casing (Specs by JLA Geosciences, Inc).	3
02750	Well Screen and Gravel Pakc (Specs by JLA Geosciences, Inc).	3
02760	Well Development (Specs by JLA Geosciences, Inc).	3
02765	Borehole Geophysical Logging and Video Log (Specs by JLA Geosciences, Inc).	2
02775	Pumping Tests (Specs by JLA Geosciences, Inc).	2
02780	Well Disinfection and Water Quality Sampling (Specs by JLA Geosciences, Inc).	3
02785	Formation Water Disposal System (Specs by JLA Geosciences, Inc).	2
02938	Sodding	2
DIVISION 3 - CONCRETE		
03001	Concrete	7
DIVISION 9 - FINISHES		
09900	Painting	10
DIVISION 11 - EQUIPMENT		
11213	Deepwell Turbine Pumps	3
DIVISION 13 - SPECIAL CONSTRUCTION		
13100	Instrumentation, Controls, and Telemetry	7

SECTION 01000

GENERAL REQUIREMENTS

1.0 PROJECT LOCATION

A. East of Lake Osborne Drive and South of Lake Worth Road.

2.0 SCOPE OF WORK

A. The Work to be performed by the Contractor includes permitting, inspecting, furnishing all materials, labor, tools, equipment, water, light, power, transportation, superintendence, temporary construction of every nature, and all other services and facilities of every nature whatsoever necessary to modify, construct, complete, deliver and place in operation the subject Project as shown on the Drawings and/or as herein described as specified. All Work to be in accordance with the Contract Documents.

3.0 REFERENCE POINTS

A. Horizontal and vertical control have been provided in the Drawings. All construction staking to be provided by the Contractor.

4.0 GRADES, DIMENSIONS, AND ELEVATIONS

A. Written dimensions have preference over scaled dimensions. All elevations are based on the 1929 National Geodetic Vertical Datum (N.G.V.D.).

5.0 EXISTING STRUCTURES AND UTILITIES

A. All known utilities have been shown on the Drawings according to the best information available. It is the Contractor's responsibility to contact all owners of structures or utilities above ground, on the surface, or below the ground, within the Project area so that said owners may stake or otherwise mark or protect their facilities. The Contractor must provide facilities and be responsible for the protection of all structures, buildings and utilities, underground, on the surface, or above ground against trenching, dewatering, or any other activity connected with the Work throughout the entire Contract Time.

B. When structures and utilities have been properly shown or marked and are disturbed or damaged in the execution of the Work, they must be repaired immediately in conformance with best standard practice and the approval of the owner of the damaged utility or structure. In the case of structures and utilities which have not been properly shown or located as outlined above and are disturbed or damaged in the prosecution of the Work, take whatever steps are necessary for safety and notify the affected utility owner and avoid any actions which might cause further damage to the structure or utility.

C. Should the Work require repairs, changes or modifications of the Owner's utilities as well as other utilities, it is the responsibility of the Contractor to provide for the maintenance of continuous water, sewage, electric, telephone and other utility services to all present customers of such utilities, unless approval in writing is secured from the applicable utility company or Owner for interruption of such service.

D. Contractor is responsible for verifying all vertical and horizontal locations of all existing utilities and structures, whether shown on the drawings or not, to verify any potential conflicts prior to ordering any materials.

6.0 QUALITY CONTROL

A. Testing Laboratory Services:

All tests and analyses, which are called for in the Specifications and/or Drawings to be performed by an Independent Testing Laboratory, will be at the Owner's expense unless otherwise specified, provided the tests and analyses determine that the material(s) and/or Work meets the requirements as specified. All such tests that fail to meet the Project requirements are to be paid by the Contractor. Contractor shall be responsible for scheduling test lab visits in a manner to limit costs of stand-by time and non-tests assessed because of minimum per visit charges. Such excessive costs will be paid by Contractor.

B. Field Observations:

Provide twenty-four (24) hour notification to the Engineer for all specified field observations, unless otherwise noted.

7.0 MOBILIZATION

A. Consists of the preparatory Work and operations in mobilizing for beginning Work on the Project, including, but not limited to, those operations necessary for the movement of personnel, equipment, supplies and incidentals to the Project site, and for the establishment of temporary offices, buildings, safety equipment and first aid supplies, sanitary and other facilities, as required by these Specifications, and State and local laws and regulations.

The costs of bonds, insurance and any other pre-construction expenses necessary for the start of the Work, excluding the cost of construction materials, is to be included in Mobilization.

B. When the Bid Form includes a separate pay item for Mobilization, partial payments will be made in accordance with the following:

Percent of Contract Price Less Mobilization Earned	Allowable Percent of the Lump Sum Price of Mobilization
5	25
10	50
25	75
50	100

The standard retainage will be applied to these payments. Previous payments for Mobilization and unpaid amounts on Allowances will not be considered in calculating the percent of the Contract Price earned. Payments will be made in stepped increments as shown and will not be interpolated between steps.

C. When the Bid Form does not include a separate item for Mobilization, all Work and incidental costs specified as being covered under Mobilization is to be included for payment under the several scheduled items on the Bid Form, and no separate payment will be made therefor.

8.0 MAINTENANCE OF TRAFFIC

A. In the Contractor's use of streets and highways for the Work to be done under these Specifications, conform to all Municipal, County, State and Federal laws and regulations as applicable. Provide, erect and maintain effective barricades, warning lights, and signs on all intercepted streets or highways for protection of the Work and safety of the public. All barricades or obstructions which encroach on or are adjacent to the public rights of way should be provided with lights which are illuminated at all times between sunset and sunrise.

B. Contractor shall schedule Work to cause minimum disturbance of normal pedestrian and vehicular traffic and be responsible for providing suitable means of access to all public and private properties during all stages of the construction. Other than for an emergency safety condition, the Contractor must contact the Owner and Engineer for approval prior to completely blocking off any street to vehicular traffic during construction. Contractor shall provide written notification to emergency, police, fire and other appropriate agencies at least 24 hours in advance of new work or changed work.

C. Maintain traffic in accordance with Section 102 of the Florida Department of Transportation Standard Specifications for Road and Bridge Construction, 2007 Edition, except as follows:

1. Contractor is responsible for preparing a Maintenance of Traffic plan. Submit plan for Owner or roadway authority (City, County, D.O.T.) review.

   The Maintenance of Traffic plan must be prepared by a person who is certified by an FDOT certified school or an engineer licensed in the State of Florida.

2. When the Bid Form does not include a separate item for Maintenance of Traffic, the costs are to be included for payment under the several scheduled items on the Bid Form, and no separate payment will be made.

9.0 PLACING EQUIPMENT INTO SERVICE

A. Do not operate or place into service or energize, electrical and mechanical equipment until approved by the Owner and Engineer. Such approval may be granted only after all interested parties have been duly notified, have given approval for placing the equipment into service, and all interested parties are present or waived their right to be present. Contractor shall provide, in writing, seventy-two (72) hour notification for all item and equipment start-ups.

10.0 SALVAGEABLE MATERIAL

A. All salvageable material and/or equipment removed as a part of the Work for which specific use, relocation or other disposal is not specifically noted on the Drawings or otherwise specified, must be disposed of by the Contractor. All material and/or equipment not in salvageable condition as determined by the Engineer, must be disposed of by the Contractor. The actual storage site for salvageable material will be designated by the Owner.

11.0 BORING LOGS, OTHER REPORTS AND DRAWINGS UTILIZED BY ENGINEER

A. Boring Logs, other reports and Drawings utilized by Engineer, if attached at the end of these Specifications, are provided for Contractor's information in accordance with paragraph 4. of the Instructions to Bidders and are not a part of the Contract Documents. There is no technical data in the Boring Logs, other reports or Drawings that should be relied on by the Contractor. There also were no other reports or drawings utilized by Engineer in preparation of the Contract Documents that contained data that could be relied on by the Contractor.

12.0 DISPOSAL OF EXCAVATED MATERIALS AND DEBRIS

A. All excess excavated material and debris not required for backfill (unless otherwise noted), broken pipe, sidewalks, curbs and other concrete items, together with all roots, boards and other debris are to be disposed of by the Contractor at an appropriate legal site.

13.0 TEMPORARY CONTROLS AND FACILITIES

A. The Contractor is responsible for compliance with all NPDES regulations including submitting a Pollution Prevention Plan, submitting a Notice of Intent, conducting maintenance and inspection of controls, erosion and sediment controls and submitting a Notice of Termination.

B. As part of the Work, the Contractor shall be responsible for applying for, obtaining and complying with all required dewatering permits. Contractor shall notify South Florida Water Management District (SFWMD) prior to all dewatering activities. All dewatering shall meet SFWMD requirements.

C. Contractor shall install all turbidity control devices required by SFWMD, if necessary. Contractor shall notify SFWMD for inspection of turbidity control devices prior to any construction activities.

14.0 CONSTRUCTION SCHEDULE MEETINGS

A. Contractor shall submit a construction schedule in accordance with the General Conditions. Contractor's Project Manager and a representative of subcontractors performing work at the time of the meeting shall attend a coordination/progress meeting a minimum of once a month, as designated by the Owner, at the Owner's office during the progress of the Work. Contractor shall submit an updated construction schedule to the Engineer at each coordination/progress meeting.

15.0 MISCELLANEOUS

A. Prior to final payment, Contractor shall ensure that all fuel tanks, etc. are full.

B. All bolts, nuts, washers, etc. and miscellaneous hardware shall be 316 stainless steel, unless otherwise indicated.

16.0 CONTRACTOR'S SUBMITTALS

A. Contractor shall be required to submit, with a letter of transmittal to the Engineer, a minimum of ten (10) copies of each checked and approved shop drawing, mix report, laboratory results, etc., where required in the specifications, Drawings or as appropriate, in lieu of the five (5) copies specified in Article 6 of the General Conditions or as specified elsewhere in these Specifications. Of the ten copies submitted, two copies will be returned to the Contractor for the Contractor's use. If the Contractor requires any additional approved copies, the Contractor shall submit additional copies at the time of initial submission. Allow a minimum of two weeks from date of receipt for review by the Engineer. Review of shop drawings will be general and will not relieve the Contractor from any responsibility.

B. Contractor shall be required to submit, with a letter of transmittal to the Engineer, for review and approval, eight (8) hard copies and eight (8) copies in CD format of each Operation and Maintenance Manual for all equipment, regardless of the number of submittals specified elsewhere in these Specifications.

17.0 CONSTRUCTION SEQUENCE

A. In addition to requirements of the Specifications and Drawings, the Contractor shall submit Construction Schedule and Project Phasing and Temporary Facilities Plan to Engineer which will include coordination of the various elements of the Work.

18.0 PROTECTION AND RESTORATION OF SURVEY MONUMENTS

A. The Contractor shall be responsible for protecting and restoring all land and property corners, such as section corners, ¼ section corners, property corners or block control points, and for maintaining all horizontal and vertical control points. All surveying work shall be the responsibility of the Contractor and shall be performed under the supervision of a Florida Professional Surveyor and Mapper. Survey points that will be destroyed during construction shall be properly referenced and replaced at the Contractor's expense with permanent monuments approved by the ENGINEER.

19.0 GENERAL ALLOWANCE

A. General Allowance: The work to be paid under this item may cover unforeseen and unanticipated costs associated with the work. Use of the General Allowance requires written authorization by the Owner prior to performing any work under this item. Any unused portion of the General Allowance will be credited to the Owner at the time of final payment.

B. Other Allowances: Bid items B-19, B-20, B-21, and B-22 (Extra Work and Standby Time) are allowance items for additional work as may be ordered by the Owner. No work under these items shall be furnished by the Contractor until authorized by the Owner in writing.

C. Prior to final payment, an appropriate Change Order will be issued as recommended by Engineer to reflect actual amounts due Contractor on account of Work covered by allowances or any credit due for unused allowance balances, and the Contract Price shall be correspondingly adjusted.

20.0 ORDER OF PRECEDENCE

A. The Order of Precedence shall follow the order as set forth in Article B Contract Documents, page 00500-3 and 00500-4 of the Agreement.

B. In the case of a discrepancy between any of the Contract Documents, the most restrictive requirement shall govern unless otherwise determined by the Engineer.

C. In the event that a conflict cannot be resolved by the methods listed in paragraph A or B above, the Engineer shall review the dispute and issue a clarification to resolve the issue. The Engineer's decision shall be binding on all parties. In general the Engineer will consider the overall intent of the project as presented in the contract documents, and render a decision consistent with the overall project objectives.

21.0 APPROVED PRODUCTS LIST

A. All materials furnished shall be the manufacture and model as included in the City of Lake Worth Water Utilities Department Approved Products List unless otherwise noted.

END OF SECTION

SECTION 01010

SUMMARY OF WORK

PART 1 GENERAL

1.01 WORK COVERED BY CONTRACT DOCUMENTS

A. Furnish all labor, equipment, and materials necessary to deepening of existing production well 12 for the City of Lake Worth (Owner). Deepening of well 12 will include removal of the existing well screen and riser casing, video survey of the well, deepening the well to the depth selected based on geophysical logging, installation of new well screen, gravel pack and riser casing, development, testing and disinfection of the well.

B. The Contractor shall be responsible for all labor, materials, transportation, tools, supplies, equipment, and appurtenances necessary to construct, develop, and test the wells and deepen production well 12 as specified herein. In general, all methods and material used under this construction shall be in accordance with the latest revisions of the American Water Works Association Standard for Wells (AWWA A100-06) and the National Water Well Association Standards as they apply to the particular needs or conditions encountered in the proposed work.

1.02 WORK BY OTHERS

A. The Contractor will diligently perform the scope of work independently of all others who may perform concurrent tasks during execution of the scope of work.

B. The Owner reserves the right to add to the work in accordance with the Contract Documents.

C. Access to the well site and work areas shall be limited to the areas shown on the project drawings and as discussed in the pre construction meeting(s).

1.03 WORK SEQUENCE

A. Contractor must contact the Palm Beach County Health Department and submit applicable portions of the "Well Construction Permit Application", and any others required for construction as filed by the Owner and Engineer prior to commencement of well drilling activities.

B. Sequence of detailed work will be discussed at the Pre-Construction meeting. Alternative sequence of work may be considered if the proposed sequence is of benefit to the Owner. The Contractor shall be prepared to perform the sequence as outlined in the Specifications.

END OF SECTION

SECTION 01025

MEASUREMENT AND PAYMENT

PART 1 GENERAL

1.01 SECTION INCLUDES

A. Measurement and payment criteria applicable to the Work performed under a Unit Price payment method.

1.02 AUTHORITY

A. Measurement methods delineated in the individual Specification sections are intended to complement the criteria of this Section. In the event of conflict, the requirements of the individual Specification section will govern.

B. The Engineer will take all measurements and compute quantities unless noted otherwise herein.

C. Contractor to assist Engineer by providing necessary equipment, workers, and survey personnel as required.

1.03 UNIT QUANTITIES SPECIFIED

A. Quantities and measurements indicated in the Bid Form are for bidding and Contract purposes only. Quantities and measurements supplied or placed in the Work and verified by the Engineer will determine payment. Waste will not be included in the measurements or quantities.

B. If the actual Work requires more or fewer quantities than those quantities indicated, provide the required quantities at the Contract Unit Price.

1.04 VOLUME MEASUREMENT

A. Measured by cubic dimension using mean length, width, and height or thickness.

B. For excavation of lakes, canals, ditches, etc., material will be measured in its original position by a Professional Land Surveyor who is licensed in the State of Florida. The Surveyor will be retained by the Contractor. Quantities will be based on before and after cross sections determined by the Surveyor. Payment will not be made for excavation beyond the lines shown on the Drawings.

1.05 AREA MEASUREMENT

A. Measured by square dimension using mean length and width or radius.

1.06 LINEAR MEASUREMENT

A. Measured by linear dimension, at the item centerline or mean chord.

B. For pipelines, the length will be measured from center of structure or fitting to center of structure or fitting.

1.07 PAYMENT

A. Payment Includes: Full compensation for all required labor, products, tools, equipment, plant, transportation, services and incidentals; erection, application or installation of an item of the Work; overhead and profit.

B. Final payment for Work governed by unit prices will be made on the basis of the actual measurements and quantities accepted by the Engineer multiplied by the unit price for Work which is incorporated in or made necessary by the Work.

C. Payment for lump sum items will be made on the basis of percentage complete as approved by the Engineer.

PART 2 PRODUCTS

Not Used.

PART 3 EXECUTION

3.01 SCHEDULE A – GENERAL ITEMS

A. ITEM NO. 1 – BONDS AND INSURANCE

This pay item shall include the costs of bonds and any required insurance for the start of work, including temporary environmental controls, sanitary facilities, etc. Bonds and insurance shall be paid for at the Contract Lump Sum Price as listed on the Bid Form completed and accepted.

B. ITEM NO. 2 – MOBILIZATION/DEMOBILIZATION/GENERAL CONDITIONS

The work specified in this item consists of the work and operations necessary in mobilizing and demobilizing for the work on described by the contract documents, including but not limited to, those operations necessary for the movement of personnel, equipment, supplies and incidentals to and from the project site, as required by these specifications, including but not limited to, temporary environmental controls, sanitary facilities, and the special provisions made by State and local laws and regulations. This pay item shall include the costs to comply with all elements of the General Conditions of the Contract, including but not limited to: record keeping, safety and permitting. Payment for this item shall be made at 50% of the Contract Lump Sum Price following completion of mobilization and 50% following completion of demobilization to and from the well site and acceptance by the Owner. The Lump Sum price for mobilization/demobilization shall not exceed 10% of the total contract price.

C. ITEM NO. 3 - PERMITS

The work included in this item consists of obtaining all permits required for construction. This item shall include all permit fees. Payment will be made based on the actual cost for permits obtained for construction with any balance credited back to the Owner.

D. ITEM NO. 4 – VIDEO TAPING

The work included in this item consists of videotaping the pre-construction conditions of the project area and any areas that may be impacted by construction activities and providing the recording in standard DVD format. Payment will be made at the Contract lump sum amount for the item once completed and accepted by Owner.

E. ITEM NO. 5 – PREPARE AND FURNISH RECORD DRAWINGS

The work included in this item consists of the cost of preparing, submitting, and obtaining Owner approval of electronic as-built drawings, including GPS coordinates for all valves, fittings, meter boxes, fire hydrants, etc., and other data as may be required in the Contract Documents. Payment will be made on a lump sum basis based on the percentage of the item completed and accepted by Owner. Payment for this item will not be made until final record drawings (signed and sealed by a Florida registered surveyor) have been received and accepted by Owner. Substantial Completion on the Contract will not be granted or achieved until record drawings are submitted and accepted by the Owner.

F. ITEM NO. 6 - GENERAL ALLOWANCE

This item shall apply to items agreed to by the Engineer and Owner that are not otherwise covered in the Contract Bid Items, or where additional monies are necessary due to unforeseen circumstances, strictly out of the control of the Contractor. Application for payment of any monies in this allowance fund must be approved in writing by the Engineer and Owner before any monies can be expended from this pay item. Any monies not used from this allowance shall not be paid to the Contractor, and shall remain with the Owner at the conclusion of the project.

3.02 SCHEDULE B – WELL RECONSTRUCTION

A. ITEM NO. 1 – REMOVE WELLHEAD, COLUMN PIPE AND WELL PUMP

This item shall include removal of well pump, wellhead, column pipe piping assemblies, electrical cable and controls. Payment shall be made at the Contract Lump Sum Price for the complete removal of pump and appurtenances.

B. ITEM NO. 2 - REMOVE EXISTING SCREEN AND RISER FROM WELL

This pay item includes the removal of the existing well screen and riser casing from the well and shall be paid at the Contract Lump Sum Price as listed on the bid form. The price shall include but not be limited to the furnishing of all material, labor and equipment necessary to complete the work.

C. ITEM NO. 3 – CLEAN OUT BOREHOLE OF EXISTING WELL

This pay item includes the work required to clean out fill from the existing borehole to the total existing drilled depth, as approved by the Engineer. Payment shall be paid at the Contract Lump Sum amount listed on the bid form. The lump sum price shall include but not be limited to the furnishing of all material, labor and equipment necessary to complete the work.

D. ITEM NO. 4 – DRILL NOMINAL 8-INCH PILOT HOLE

This pay item includes the actual length of hole drilled and shall be measured vertically from the base of the existing cleaned borehole to a total depth as determined by the Engineer. The drilled hole shall be paid at the Contract Unit Price per linear foot, drilled and accepted, as listed on the bid form. The unit price shall include but not be limited to the furnishing of all material, labor and equipment necessary to complete the work.

E. ITEM NO. 5 – GEOPHYSICAL LOGGING

Logging shall be paid for at the Contract Lump Sum Price as listed on the Bid Form for all logs specified in Section 02765, Geophysical and Video Logging for the production well and shall include but not be limited to furnishing all material, labor and equipment necessary to complete the work.

F. ITEM NO. 6 – REAM NOMINAL 8-INCH DIAMETER PILOT HOLE TO 19-INCH DIAMETER BOREHOLE

This pay item includes the actual length of hole drilled and shall be measured vertically from present total depth of well to the newly completed total depth of the well as directed by the Engineer. The drilled hole shall be paid at the Contract Unit Price per linear foot, drilled and accepted, as listed on the bid form. The unit price shall include but not be limited to the furnishing of all material, labor and equipment necessary to complete the work.

G. ITEM NO. 7 – FURNISH AND INSTALL 12-INCH STAINLESS STEEL SCREEN

The 12-inch screen furnished and installed in place shall be installed to the depth specified by the Engineer as listed on the Bid Form. It shall be paid at the Contract Unit Price per linear foot, installed and accepted, and shall include but not be limited to all labor, equipment and other materials necessary to properly install the screen as described in Section 02750, Well Screen and Gravel.

H. ITEM NO. 8 – FURNISH AND INSTALL 12-INCH DIAMETER SDR17 PVC RISER CASING

The 12-inch riser casing furnished and installed in place shall be installed to the depth specified by the Engineer as listed on the Bid Form. It shall be paid at the Contract Unit Price per linear foot, from land surface to the total depth installed and accepted, and shall include but not be limited to all labor, equipment and other materials necessary to properly install the casing as described in Section 02745, Well Casing and 02750, Well Screen and Gravel.

I. ITEM NO. 9 – FURNISH AND INSTALL GRAVEL PACK

Gravel pack installation will be paid for at the Contract Unit Price per cubic foot as listed in the Bid Form, including time, equipment and materials necessary for proper installation. Payment will be based on the actual units installed as described in Section 02750 Well Screen and Gravel.

J. ITEM NO. 10 – AIRLIFT DEVELOPMENT

Airlift development shall be paid for at the Contract Unit Price per hour of actual airlift time as determined by the Engineer as described in Section 02760 Well Development. The said Contract Unit Price shall include but not be limited to the furnishing of all material, labor and equipment necessary to complete development as specified. Payment begins upon initiation of development and ends at the completion of successful development as determined by the Engineer. Only time approved by the Engineer will be paid for under this pay item.

K. ITEM NO. 11 – JETTING WITH SIMULTANEOUS AIRLIFT DEVELOPMENT

Jetting with simultaneous airlift development shall be paid for at the Contract Unit Price per hour of actual jetting with simultaneous airlift time as determined by the Engineer as described in Section 02760 Well Development. The said Contract Unit Price shall include but not be limited to the furnishing of all material, labor and equipment necessary to complete development as specified. Payment begins upon initiation of development and ends at the completion of successful development as determined by the Engineer. Only time approved by the Engineer will be paid for under this pay item.

L. ITEM NO. 12 – PUMP DEVELOPMENT

Pump development shall be paid for at the Contract Unit Price per hour of actual pumping time as determined by the Engineer as described in Section 02760 Well Development. The said Contract Unit Price shall include but not be limited to the furnishing of all material, labor and equipment necessary to complete development as specified. Payment begins upon initiation of development and ends at the completion of successful development as determined by the Engineer. Only time approved by the Engineer will be paid for under this pay item.

M. ITEM NO. 13 – CONDUCT STEP RATE PUMPING TEST

The pumping test will be paid for at the unit price per hour of actual pumping time, as listed in the Bid Form and described in Section 02775 Pumping Tests. The said Contract Unit Price shall include the furnishing of all material, labor and equipment necessary to complete the test as specified. Payment begins upon initiation of pumping and ends at completion of pumping. Payment will be based on the actual hours of pump testing as approved by the Engineer.

N. ITEM NO. 14 – CONDUCT PRE- AND POST- CONSTRUCTION VIDEO LOGS

Acceptable video logs will be paid for at the unit price as listed in the Bid Form and described in Section 02765, Geophysical and Video Logging including time, equipment and materials necessary to complete the work. Payment will be made at the Contract Unit Price.

O. PAY ITEM NO. 15 – FURNISH AND INSTALL 6" CERTA-LOC COLUMN PIPE AND APPURTENANCES

This item includes all the materials and labor associated with complete installation of the column pipe, and appurtenances for a properly working pump assembly as specified in the Contract Documents. Payment for this item shall be made at the Contract Unit Price for the work completed and accepted by the Owner.

P. PAY ITEM NO. 16 FURNISH AND INSTALL WELL PUMP

This item includes all the materials and labor associated with complete installation of the well pump and motor, electrical cable, and other appurtenances for a properly working pump assembly as specified in the Contract Documents. Work shall include startup and witness testing. Payment for this item shall be made at the Contract Lump Sum amount for the work completed and accepted by the Owner.

Q. PAY ITEM NO. 17 – WELLHEAD AND PIPING MODIFICAITONS

This item includes all the materials and labor associated with complete installation of the wellhead, wellhead components, pipe extensions, concrete, and other appurtenances for a properly working assembly as specified in the Contract Documents. Payment for this item shall be made at the Contract Lump Sum amount for the work completed and accepted by the Owner.

R. PAY ITEM NO. 18 – WELL DISINFECTION AND WATER QUALITY SAMPLING

Work under this pay item shall include, but not be limited to, all equipment, materials and labor to satisfactorily disinfect the well, construct easily accessible sampling points, bacteriological sampling and testing, and water quality analytical testing as required by the contract documents, state and local laws and regulations as related to this pay item. Payment of this item will be made at the Contract Lump Sum Price as listed on the Bid Form. The Contractor shall be responsible for costs associated with re-chlorination, re-sampling, and re-testing as needed to satisfactorily disinfect the well and obtain passing and acceptable water quality test results as described in Section 02780, Well Disinfection and Sampling.

S. PAY ITEM NO. 19 – PAINTING AND MISCELLANEIOUS

The work included in this item consists of all painting and other incidental work not otherwise specified, but obviously necessary for the proper completion of the project. Payment will be made at the Contract Lump Sum amount for the item once the entire project is completed and accepted by Owner.

T. ITEM NO. 20 – EXTRA WORK BY DRILLING CREW WITH DRILLING EQUIPMENT

Extra work performed by the drilling crew with drilling equipment shall be paid for at the specified Contract Unit Price per hour as listed on the Bid Form based on the amount of approved time used.

U. ITEM NO. 21 – EXTRA WORK BY DRILLING CREW

Extra work performed by the drilling crew shall be paid for at the specified Contract Unit Price per hour as listed on the Bid Form based on the amount of approved time used.

V. ITEM NO. 22 – STANDBY TIME WITH RIG AND DRILLING CREW ON-SITE

If standby time is required with the drilling crew and drilling rig on site, payment shall be made at the specified Contract Unit Price per hour as listed on the Bid Form based on the number of approved hours required.

W. ITEM NO. 23 – STANDBY TIME WITH RIG ON-SITE AND DRILLING CREW OFF-SITE

If standby time is required with the drilling crew off site and drilling rig on site, payment shall be made at the specified Contract Unit Price per hour as listed on the Bid Form based on the number of approved hours required.

X. ITEM NO. 24 – FORMATION WATER DISPOSAL SYSTEM

The work specified under this pay item includes the costs to supply, install, and maintain formation water disposal system as specified in the Contract Documents and accepted by the Engineer. This item includes all labor, material and equipment and removal of the piping from the project site after construction is complete. This pay item also includes the costs to maintain the disposal and settling system and shall include but not be limited to piping, fittings, pumps, monitoring, operation and maintenance. Payment shall be made per Contract Lump Sum Price as listed on the Bid Form.

Y. ITEM NO. 25 – FENCE AND SITE RESTORATION

The work specified under this pay item includes furnishing and installing the new fence, restoring the sites to their original condition, the intended grades as shown on the site plan, restoring all side slopes, and sodding all side slopes to the satisfaction of the Engineer and Owner. Payment shall be at the Contract Lump Sum Price as listed on the Bid Form and shall include all equipment, tools and labor necessary to restore the sites complete and accepted by the Owner.

3.03 SCHEDULE C – ELECTRICAL

A. PAY ITEM NO. C-1 – FLOWMETER

The work included under this item includes furnishing and installing the flowmeter, transmitter, pedestal stand, and all appurtenances, field testing, calibration, and startup services for a complete operable system. Payment will be made at the Contract Lump Sum amount for a complete system accepted by the Owner.

B. PAY ITEM NO. C-2 – INSTRUMENTATION AND SCADA PROGRAMMING

The work included in this item consists of placing into service all instrumentation and control equipment including but not limited to, making all electrical connections, field testing and calibration, and all miscellaneous accessories and appurtenances to provide a completely operational system. Payment will be made at the Contract Lump Sum Amount for a complete operable system accepted by the Owner.

C. PAY ITEM NO. C-3 – ELECTRICAL WIRE, CONDUIT, DISCONNECTS, AND BOXES

The work included in this item includes furnishing and installing electrical conduit and wires including, but not limited to coordination with Owner and Power Company, junction boxes, grounding, hardware, and all other work and materials required for a complete installation. Payment will be made at the Contract Lump Sum amount for a complete operable system accepted by the Owner.

END OF SECTION

SECTION 01720

RECORD DOCUMENTS

PART 1 GENERAL

1.01 SECTION INCLUDES

A. On site maintenance of Record Documents.

B. Required record information.

1.02 MAINTENANCE

A. Maintain on site, one set of the following Record Documents; record actual revisions to the Work:

1. Drawings.
2. Specifications.
3. Addenda.
4. Change Orders and other modifications to the Contract.
5. Shop Drawings, product data, and samples.

B. Store Record Documents separate from documents used for construction.

C. Record information concurrent with construction progress.

D. In the interest of timely detection of non-conforming Work, all Record Drawing information must be furnished to the Engineer prior to submitting for payment of that particular item. No progress payment application requests will be approved by the Engineer without satisfactory record drawings for that particular items(s).

E. Under no circumstances will roadway paving Work be allowed to start until the Engineer has reviewed the Record Drawing information for Work constructed within the roadway area that will be paved.

F. All Record Drawing information such as elevations, distances, location of underground utilities, lake cross-sections, and road cross-sections must be obtained by a Professional Surveyor and Mapper, who is licensed in the State of Florida. The Surveyor will be retained by the Contractor. Information must be signed and sealed.

G. Record Documents must be available to Engineer for examination at any time during the progress of the Work.

H. Submit completed Record Documents upon completion of the Work and prior to application for final payment.

I. Show record information in bold or boxed out to stand out from rest of Drawing.

J. Record actual revision dates of the Work.

1.03 REQUIRED RECORD DRAWING INFORMATION

A. All elevations and horizontal locations shown on the Drawings must be verified. Verification or deviation must be clearly indicated on the Drawings.

B. Water

1. Top of pipe elevations at 100 foot intervals.

2. Distance from the reference points shown on the Drawings.
3. Horizontal location at 100 foot intervals.
4. Location of water services, valves, fittings, hydrants, blowoff points, etc. by stationing and offsetting from wastewater manholes. If wastewater manholes are not located nearby, use reference points shown on the Drawings.
5. Details of any design changes.
6. Location of utilities and miscellaneous structures encountered which are different from or not shown on the Drawings.
7. Elevations and clearances when water mains cross either wastewater or drainage pipe.
8. Changes in pipe material.
9. Finished well head elevation.
10. Depth of all drilled holes of each diameter.
11. Depth of each size casing pie and screen section.
12. `Any changes to well construction, well head, surface piping, or site layout.

C. Conduit Sleeves

1. Horizontal location and size of conduit.

D. Structural

1. Obtain horizontal and vertical locations and elevations for all structural components, including but not limited to, intake structure including piles and cap, slabs, building and building features, grating, trash rack, etc.

E. General Site

1. Spot elevations shall be taken at a reasonable grid interval for finished grade verification. Obtain spot elevations at all grade or contours (as shown on the Drawings), grade breaks, property lines, and limits of construction.

PART 2 PRODUCTS

Not Used.

PART 3 EXECUTION

3.01 CONTRACTOR'S SURVEYOR RESPONSIBILITIES

A. Engineer will provide the Contractor with electronic files of the construction drawings at the pre-construction conference. One copy of the electronic files will be provided on CD/DVD media in AutoDesk Civil 3D 2014 format. No warranty of the usability of the electronic files provided is expressed or implied. The cost of any required conversion or duplication of the electronic files from the format specified herein shall be the responsibility of the Contractor.

B. The Owner and Engineer will advise the Contractor at the pre-construction conference of the acceptable method and file format by which the interim and final Record Drawing information will be provided to the Owner and/or Engineer.

C. Record Drawing information shall be prepared electronically. The Record Drawing information shall be placed on a separate layer so that it is isolated from all other layers in the drawing file. This layer must be prepared in such a manner that it can be exported as a separate AutoCad file and subsequently inserted into an AutoCad drawing containing the approved design information. The AutoCad file shall be accompanied by an Adobe Acrobat portable document format (.pdf) file of the Record Drawings.

D. Place information in the Drawings in a manner that indicates which elevations and dimensions have been checked. This is to be done by crossing through the design elevation or dimension and

placing the Record information next to it. If an elevation or dimension has not changed, the same procedures should be followed to confirm that it has been checked. Add new information in a manner to indicate that it is Record information and not design information.

E. Each Record Drawing sheet must include the surveyor's name, company, address, license number, and date of field survey.

F. Signed and sealed Record Drawings shall be submitted with all pay applications and at the conclusion of the Project.

3.02 CONTRACTOR RESPONSIBILITIES

A. Record document information not required to be obtained by a Professional Surveyor and Mapper must be obtained by the Contractor.

B. Mark Record information on one clean set of prints of the Contract Documents.

C. Each Drawing must be stamped indicating that the information has been reviewed by the Contractor.

D. Contractor's Surveyor will transfer Contractor supplied information to the record drawing.

END OF SECTION

SECTION 02108

VIDEO-TAPING OF EXISTING CONDITIONS

PART 1 GENERAL

1.01 SECTION INCLUDES

A. Video-recording the pre-construction conditions of the surface features within the construction conditions.

1.02 SUBMITTALS

A. Pre Construction: Submit two completed DVD media that is playable on standard DVD players to Engineer at least seven calendar days prior to commencing construction and delivery of any materials and/or equipment.

B. Post Construction: Submit two completed DVD media that is playable on standard DVD players to Engineer for review prior to substantial completion.

1.03 QUALITY ASSURANCE

A. Video-recording must be done by a responsible commercial firm known to be skilled and regularly engaged in the business of pre-construction video documentation.

B. A Contractor walk through with a handheld camera will not comply with these specifications.

PART 2 PRODUCTS

2.01 MATERIALS

A. DVD Media: Standard name-brand high quality write-once media. New, not previously used.

PART 3 EXECUTION

3.01 PRE CONSTRUCTION VIDEO-RECORDING

A. Video-recording shall be performed and submitted at least seven calendar days prior to the commencement of construction and delivery of any materials and/or equipment. Upon review by the Engineer, and prior to commencement of construction and delivery of any materials and/or equipment, additional video-recording of any portions of the construction areas that are not adequately documented on the initial video-tapes may be required.

B. Video-record the pre-construction conditions of the surface features within the construction area.

C. The video-record will serve as a record of the pre-construction conditions for disputes arising from restoration, and should, therefore, be taken within the construction area in sufficient detail as necessary to clearly depict pre-construction conditions.

D. Indicate the date and time (hour, minutes and seconds) on which the video-records were recorded.

E. Video-records shall record video with simultaneous audio to assist viewer orientation with any needed identification, differentiation, clarification, or objective description of the features being shown with audio recording of commentary by the camera operator. The audio recording shall be free of any conversations between the camera operator and other production technicians.

F. Camera Height and Stability: Do not exceed 10 feet vertical distance between camera lens and the ground when conventional wheeled vehicles are used as conveyances for the recording system.

G. Camera Control: Control camera pan, tilt, zoom-in and zoom-out rates such that recorded objects will be clearly viewed during video tape playback. Control or adjust camera and recording system controls such as lens focus, aperture, light, and white balance to maximize picture quality.

H. Viewer Orientation Techniques: Use existing landmarks including but not limited to, all visible house and business addresses, to maintain viewer orientation.

I. Video Record Log: Provide a written log of each video record's contents including but not limited to, the names of the streets or easements, coverage beginning and ending, directions of coverage, and the date upon which the recording was made.

J. All video-records and DVD's become the property of the Owner.

3.02 POST CONSTRUCTION VIDEO RECORDING

A. Video-record the post-construction conditions.

END OF SECTION

SECTION 02613

DUCTILE-IRON PIPE

PART 1 GENERAL

1.01 SECTION INCLUDES

A. Ductile iron pipe and fittings for Potable Water, Wastewater, and Reclaimed Water Systems, sizes 3 inch diameter through 64 inches in diameter.

1.02 RELATED SECTIONS

A. Section 02220 - Excavating, Backfilling and Compacting.

B. Section 02675 - Disinfecting Water Mains.

1.03 REFERENCES

A. ASTM A153-01 - Zinc Coating (Hot-Dip) on Iron and Steel Hardware.

B. ASTM A 197-00 - Cupola Malleable Iron.

C. ASTM A 307-00 - Carbon Steel Bolts and Studs, 60,000 PSI Tensile Strength.

D. ASTM A 506-00 – Alloy and Structural Alloy Steel, Sheet and Strip, Hot-Rolled and Cold-Rolled.

E. ASTM A 536-99 - Ductile-Iron Castings.

F. ASTM A 575-96 - Steel Bars, Carbon, Merchant Quality, M-Grades.

G. ASTM D 1248-00 - Polyethylene Plastics Extrusion Materials for Wire and Cable.

H. ASTM D 2794-93 - Test Method for Resistance of Organic Coatings to the Effects of Rapid Deformation (Impact).

I. AWWA C104-08 - Cement-Mortar Lining for Ductile-Iron Pipe and Fittings for Water.

J. AWWA C105-10 - Polyethylene Encasement for Ductile-Iron Pipe Systems.

K. AWWA C110-08 – Ductile-Iron and Gray-Iron Fittings, 3 inch through 48 inch for Water.

L. AWWA C111-07 - Rubber-Gasket Joints for Ductile-Iron Pressure Pipe and Fittings.

M. AWWA C115-06 - Flanged Ductile-Iron Pipe with Ductile-Iron or Gray-Iron Threaded Flanges.

N. AWWA C150-08 - Thickness Design of Ductile-Iron Pipe.

O. AWWA C151-09 - Ductile-Iron Pipe, Centrifugally Cast, for Water or Other Liquids.

P. ANSI/AWWA C153/A21.53-11 (latest revision) - Ductile-Iron Compact Fittings.

Q. AWWA C 600-05 - Installation of Ductile-Iron Water Mains and Their Appurtenances.

1.04 SUBMITTALS

A. Manufacturer's technical product data for pipe and fittings.

B. Manufacturer's certifications of product compliance with the referenced AWWA standards.

1.05 QUALITY ASSURANCE

A. Each pipe and fitting must be marked with the following information: weight, pressure or thickness class (as applicable), manufacturer's mark, and the letters "DI" or "DUCTILE".

PART 2 PRODUCTS

2.01 PIPE

A. Manufactured in accordance with AWWA C151.

Size (inches)	Pressure Class	Special Thickness Class
3-20	--	51
24	350	--
30-42	300	--
48-64	250	--

B. Push-on type joints conforming to AWWA C111.

C. Flanged Joints (where specified on the Drawings): Conform to AWWA C115. Ductile iron conforming to the chemical and physical properties specified in AWWA C110. Pipe to be Special Thickness Class 53. Do not thread or flange pipe in the field.

2.02 FITTINGS

A. Mechanical: AWWA C153 compact fittings with joints conforming to AWWA C111. All buried fittings to be mechanical type.

B. Flanged: AWWA C110 for 3 inch through 48 inch and AWWA C153 for 54 inch through 64 inch. Joints to conform to AWWA C111. All above ground fittings to be flanged.

2.03 COATINGS AND LININGS

A. Cement-mortar lined in pipe used for Potable Water and Reclaimed Water Systems conforming to AWWA C104.

2.04 ACCESSORIES

A. Clamps, straps and washers : ASTM A 506.

B. Rods: ASTM A 575.

C. Rod Couplings: ASTM A 197.

D. Bolts and Nuts: ASTM A 307, Grade B.

E. All bolts, nuts, washers, couplings, rods, clamps, and straps are to be hot-dipped galvanized per ASTM A153.

F. Thrust Blocks: Concrete with a minimum compressive strength of 2500 psi at 28 days. Allowed only where specifically called for on the drawings.

G. Restrain pipe joints using either 'Field Lok' gaskets as manufactured by U.S. Pipe or 'Fast Grip' gaskets as manufactured by American Ductile Iron Pipe.

H. Restrain buried fittings using 'Megalugs' as manufactured by Ebaa Iron Sales, Inc. or approved equal.

PART 3 EXECUTION

3.01 INSTALLATION

A. Install ductile iron pipe in accordance with AWWA C600.

B. Clean gaskets, sockets, and spigots of all foreign matter.

C. When ductile iron pipe is cut in the field, smooth the rough cut edge with a grinder or coarse file and bevel the end so that the cut end does not damage the gasket.

D. Lubricate the exposed face of the gasket and the spigot with the pipe and/or fitting manufacturers' recommended joint lubricant.

E. The interior of the pipe must be thoroughly cleaned of all foreign matter before being lowered into the dry trench and kept clean during laying operations by means of plugs or other approved methods.

F. Provide bell holes in the subgrade to accommodate the bells and to insure that the barrels are in contact with the foundation throughout it's full length exclusive of the bell.

G. Restrain from movement all reaction forces at bends (11-1/4 degrees or greater), tees, valves, and plugs by concrete thrust blocks or mechanical restraints as specified on the Drawings.

H. Provide minimum 30 inch depth of cover except where otherwise shown on the Drawings.

I. Coat all bolts, nuts, studs, and other uncoated parts with a coal-tar epoxy coating prior to backfilling.

3.02 CLEANING

A. Upon completion of the pipe installation, the mains are to be either cannon flushed or swabbed by forcing under water pressure a soft sided swab through the mains to remove dirt and any other foreign matter.

B. When cannon flushing, achieve a minimum velocity of 2.5 feet per second in the pipe. The duration of the flushing to be sufficient to provide a minimum flush volume equal to three times the internal volume of the pipeline being flushed.

C. The size of the swab is to be the same size as the main. Install launching and exit points as required for each pipe size. The swab is to be Style V, Type B as manufactured by Knapp, Inc. Supply sufficient water pressure to move the swab through the system. Should a single pass reveal, in the Engineer's opinion, an excessive amount of dirt and debris, a second pass may be required at no additional cost to the Owner. The Contractor is responsible for ensuring that all valves are properly opened or closed as appropriate to facilitate the swabbing process. Neither the Owner or the Engineer will be responsible for the swab getting hung up or stuck in a main and any resulting costs for removal.

D. The cost of cannon flushing/swab cleaning, as applicable, is to be included in the cost of the pipe.

3.03 HYDROSTATIC TESTING

A. All pressure mains must be subjected to a pressure and leakage test of at least 2 hours in duration.

B. Test mains after the pipe and fittings are properly restrained but before backfilling the fittings.

C. Contractor must furnish own source of potable water.

D. The length of pipe to be tested at one time must not exceed the length allowed by the controlling utilities company, or 1500 feet, whichever is less.

E. Before applying the specified test pressure, expel air completely from the pipe, valves, and hydrants.

F. Subject pipelines to a gauge pressure of 150 psi. Subject fire service lines to a gauge pressure of 200 psi. The pressure must not vary by more than 5 psi for the duration of the test.

G. Inspect the line being tested. Stop all visible leaks by an approved method regardless of the leakage test results.

H. Maximum leakage allowed will be as set in Section 5.2 of AWWA Standard C600 or as noted on the drawings, whichever is more stringent.

I. If leakage is at a rate in excess of that allowed, the Contractor must tighten the joints or replace the defective Work until the leakage is reduced to within the allowable amount.

3.04 DISINFECTION

A. Disinfect potable water mains in accordance with Section 02675.

3.05 FIELD OBSERVATION

A. Fittings, valves, thrust blocks, mechanical restraints, cannon flushing and swab cleaning are to be observed at the option of the Engineer.

B. Engineer must be present during pressure tests.

C. All pipe and fittings are subject to visual or other inspection by the Engineer at any time. Such sections that do not conform to these Specifications will be rejected when, in the opinion of the Engineer, the methods of manufacture fail to guarantee uniform results, where the materials used are such as to produce inferior pipe, or the pipe and/or fittings are otherwise damaged or defective.

END OF SECTION

SECTION 02644

CHECK VALVES

PART 1 GENERAL

1.01 SECTION INCLUDES

A. Check valves with a nominal pipe size of 2 inch through 24 inch.

1.02 REFERENCES

A. AWWA C508-09 - Swing-Check Valves for Waterworks Service, 2 inch through 24 inch NPS.

1.03 SUBMITTALS

A. Detailed manufacturer's information for valves.

1.04 QUALITY ASSURANCE

A. Provide valves with manufacturer's name, year of manufacture, valve size, working water pressure, and flow direction arrow clearly cast on the cover or body of each valve.

B. Manufacturer to be Kennedy Valve Company or approved equal.

PART 2 PRODUCTS

2.01 VALVES

A. Conform to the requirements of AWWA C508.

B. End connections suitable for connecting to adjoining piping.

C. Suitable for water works service.

D. Provide outside lever arm and weight.

E. Provide NSF approved epoxy coating inside and outside.

PART 3 EXECUTION

3.01 INSTALLATION

A. Install in accordance with the manufacturer's recommendations.

END OF SECTION

SECTION 02715

CONSTRUCTION FACILITIES AND TEMPORARY CONTROLS

PART 1 GENERAL

1.01 REQUIREMENTS INCLUDED

A. Furnish install and maintain all methods, equipment and temporary utilities as required to provide controls over environmental conditions at the construction site and related areas under the Contractor's influence. Remove physical evidence of temporary facilities upon completion of work.

B. Providing adequate facilities at every stage of performing the work is the Contractor's sole responsibility, and is not limited by the requirements hereof.

C. Except as otherwise indicated, the cost of providing and using temporary utility services is to be included in the Contract Sum.

D. Maintain distinct markers for underground lines and protect from damage during excavation operations.

1.02 REQUIREMENTS OF REGULATORY AGENCIES

A. Comply with the National Electrical Code.

B. Comply with Federal, State and local codes, ordinances, rules, regulations, standards and permits.

C. Comply with the "Manual of Accident Prevention in Construction" by the Associated General Contractors (AGC).

PART 2 PRODUCTS

2.01 MATERIALS

A. Materials may be new or used, but must be adequate in capacity for the required usage, must not create unsafe conditions, and must not violate requirements to applicable codes, ordinances, rules, regulations and standards.

2.02 TEMPORARY ELECTRICITY AND LIGHTING

A. Install circuit and branch wiring, with area distribution boxes located so that power and lighting is available throughout the construction by the use of construction type power cords, if necessary.

B. Provide adequate artificial lighting for all areas of work when natural lighting is not adequate for work and night work is allowed by the contract documents.

2.03 TEMPORARY PHONE SERVICE

A. The Contractor shall provide onsite phone service, including cell phones, to the Contractor's project

superintendent and for each driller on site. Phone supplied personnel shall be available by phone during all working hours during execution of the scope of work.

2.04 TEMPORARY WATER

A. Only potable quality water will used for well construction. Water necessary for construction activities shall be provided by the Owner at no cost to the Contractor. Wasteful use of Owner's water by Contractor will forfeit Contractor's free use of Owner's water and Contractor will be required to purchase water elsewhere. Wasteful use of water will be defined and determined by the Owner. Contractor shall be required to pay for and obtain a temporary construction meter from the Owner for use during construction. The meter must be locked at all times except while in use by the Contractor. Contractor will receive meter deposit reimbursement when the meter is returned to the Owner at the completion of the project.

2.05 TEMPORARY SANITARY FACILITIES

A. Provide sanitary facilities in compliance with laws, ordinances and regulations.

B. Service, clean and maintain facilities and enclosures.

2.06 TEMPORARY ACCESS ROAD, PARKING AND TRAFFIC CONTROL

A. Construct and maintain new and existing temporary access roads over designated easements from public thoroughfare to sites.

B. Maintain traffic areas free of excavated materials, construction equipment, products and debris.

C. Traffic control warning signs and barricades shall be in strict accordance with the provisions of the Florida Department of Transportation Manual on Traffic Controls and Safe Practices for Street and Highway Construction Maintenance and Utility Operations latest revision.

D. No road or street shall be closed to the public except with the permission of the Engineer and appropriate governmental agency.

E. The work shall be conducted at all times so as to ensure the least possible obstruction to traffic and inconvenience to the general public and the residents in the vicinity of the work, and to insure the protection of persons and property.

2.07 TEMPORARY CONTROLS

A. Noise Control:

1. Comply with all County and City ordinances.

2. Contractor shall immediately cease operations and mitigate sound to the extent required by County and City ordinance if residents complain about noise.

B. Light Control:

1. Contractor shall mitigate stray light during approved night work by directing light source to the work area only.

2. Lighting shall be directed away from nearby residences and properties.

3. Contractor shall immediately mitigate stray light upon complaint.

C. Dust Control:

1. Provide positive methods and apply dust control materials to minimize raising dust form construction operations, and provide positive means to prevent air-borne dust from dispersing into the atmosphere.

2. Contractor shall immediately mitigate dust upon complaint

D. Water Control:

1. Provide methods to control surface water to prevent damage to the project, the site, or adjoining properties.

2. Control fill, grading and ditching to direct surface drainage away from excavation, trenches, pits and other construction areas, and to direct drainage to proper runoff.

3. Provide, operate and maintain hydraulic equipment of adequate capacity to control surface water.

4. Dispose of drainage water in a manner to prevent flooding, erosion, or other damage to any portion of the site or adjoining areas.

E. Debris and Waste Materials Control:

1. Maintain all areas under the Contractor's control free of extraneous debris, garbage and waste matter.

2. Initiate and maintain a specific program to prevent accumulation of debris at the construction site, storage and parking areas, or along access roads and haul routes.

3. Provide acceptable containers for deposit of debris and waste.

4. Prohibit overloading of trucks to prevent spillage on access and haul roads.

5. Provide periodic inspection of traffic areas to enforce requirements.

6. Schedule periodic and as needed collection and disposal of debris and waste.

F. Pollution Control:

1. Provide methods, means and facilities required to prevent contamination of soil, water or air by the discharge of noxious substances from construction operations.

2. Immediately remove and properly dispose of all contaminated materials upon discovery of spillage of noxious substances.

3. Take special precautions to prevent harmful substances form entering public waters.

4. Provide systems for control of atmospheric pollutants and prevent toxic concentrations of chemicals.

G. Erosion Control:

1. Plan and execute construction and earthwork by methods to control surface drainage from cuts and fills and from borrow and waste disposal areas to prevent erosion and sedimentation.

2. Hold areas of bare soil exposed at one time to a minimum and provide temporary control measures such as berms, dikes and drains.

3. Construct fills and waste areas by selective placement to eliminate surface silts and clays from eroding.

PART 3 EXECUTION

3.01 GENERAL

A. Comply with all applicable requirements of local building codes.

B. Maintain and operate systems to assure continuous service.

C. Modify and extend systems as work progress requires.

D. Preserve from damage all property along the line of work or which is in the vicinity of or is in any way affected by the Work. Wherever such property is damaged due to the activities of the Contractor, it shall be immediately restored to its original condition by the Contractor at no cost to the Owner.

3.02 INSPECTIONS

A. Prior to placing temporary facilities into service, inspect and test each service and arrange for inspections and tests by governing authorities and obtain required certifications and permits for use thereof.

3.03 REMOVAL

A. Completely remove temporary materials and equipment when their use is no longer required.

B. Clean and repair damage caused by temporary installations or use of temporary facilities.

C. Restore permanent facilities used for temporary services to specified conditions.

END OF SECTION

SECTION 02720

WELL CONSTRUCTION SEQUENCE

PART 1 GENERAL

1.01 SCOPE OF WORK

A. The following construction sequence applies to the applies to the deepening of the City of Lake Worth Surficial aquifer production well 12 located between Lake Osborne Drive and Interstate 95 in Lake Worth, Florida.

B. Specific construction details, such as casing setting depths, screen interval, screen slot size, and gravel pack for the production well will be determined based on site specific lithologic conditions encountered during the pilot hole drilling and testing.

PART 2 PRODUCTS (NOT USED)

PART 3 EXECUTION

3.01 WELL CONSTRUCTION SCHEDULE

A. The construction schedule shall be met based on day work only (7:00 am to 7:00 pm) and excludes nights, weekends and Federal holidays. The Contractor will perform work on the site only within the designated official working hours unless otherwise approved by the Engineer.

B. The Contractor shall procure all permits, certificates, and licenses required by law for the execution of the work. The Contractor shall comply with all federal, state, and local regulations and ordinances relating to the execution of the work. The Engineer must be furnished a copy of each permit prior to commencing work.

3.02 WELL CONSTRUCTION SEQUENCE

A. Mobilize to the well site and prepare the construction site for well deepening. Set up drilling rig and support equipment within the area shown on the project drawings or as approved by the Engineer.

B. Perform a pre-construction down hole camera video log of the existing casing and screen. Pre-construction video shall be performed in dynamic and static conditions. Pumping rate during the dynamic video shall be at a minimum 500 gpm. All logging shall be supervised by the Engineer with 24 hours advanced notice. The Contractor is responsible to ensure that logs are complete and include the entire well screen and cased intervals as directed by the Engineer. If the Engineer determines that the video is unacceptable due to poor quality, the Contractor at his expense will obtain the necessary equipment to perform additional logging to the satisfaction of the Engineer. Logging shall be conducted by the Contractor in accordance with Section 02674, Borehole Geophysical Logging and Video Log.

C. Remove the existing 10-inch diameter well screen and riser casing.

D. Clean out the existing open borehole to the existing drilled depth (approximately 150 feet) using a nominal 19-inch diameter drill bit. This work will include all necessary equipment, materials and labor

needed to complete cleaning out of the borehole in accordance with Section 02740, Well Drilling.

E. Drill a nominal 8-inch diameter borehole to a depth of approximately 250 feet below land surface from the base of the existing 19-inch borehole using the mud rotary method in accordance with Section 02740, Well Drilling. Formation samples shall be collected by the Contractor every 5 feet, at a minimum, or as otherwise specified by the Engineer.

F. Prepare the 8-inch and 19-inch diameter borehole for geophysical logging by circulation of the drilling fluid until uniform and free of drill cuttings. Logging shall be conducted by the Contractor in accordance with Section 02674, Borehole Geophysical Logging and Video Log.

G. Following completion of geophysical logging, ream the 8-inch pilot hole to a nominal 19-inch diameter to an approximate depth of 250 feet using the mud rotary method. A staged bit shall be used that includes an 8-inch diameter lead bit placed below the reaming bit assembly. Prepare the borehole for well screen and riser casing installation by circulating the drilling fluid until all drill cuttings have been removed. Drilling shall be performed in accordance with Section 02740, Well Drilling.

H. Furnish and install approximately 50 feet of 12-inch diameter Type 316 stainless steel continuous slot screen. The top of the screen shall be fitted to 12-inch diameter SDR17 PVC riser casing which shall be continuous from approximately 200 feet below land surface up to land surface. Screen and casing lengths are approximate. Exact lengths will be determined based on results of geophysical logging. Screen and riser casing construction, assembly and installation will be in accordance with Section 02745, Well Casing and Section 02750, Well Screen and Gravel. Top of casing elevation shall be set as established in the project drawings.

I. Furnish and install gravel pack in the annular space between the screen and the borehole. Gravel shall be placed using the tremmie method and continually flushed with water to a depth 50 feet below ground level and in accordance with Section 02750, Well Screen and Gravel.

J. Develop the screened well using high velocity water jetting with simultaneous airlift development. Initial development shall be done using air lift alone to stabilize the gravel pack. Following initial airlift shall be high velocity water jetting with simultaneous airlift. After gravel pack has stabilized, perform pump development until well meets development criteria for sand and silt content. All well development shall be performed in accordance with Section 02760, Well Development.

K. Conduct a five step, variable rate pumping test to measure drawdown, well efficiency and water quality. A submersible test pump shall be installed according to the Engineer recommended pump setting depth. Pump testing shall be in accordance with Section 02775, Pumping Tests.

L. Perform water quality sampling of the well. Water quality sampling shall be in accordance with Section 02780, Well Facility Disinfection and Water Quality Sampling.

M. Perform a final down hole camera video log of the existing casing and screen. Final well video shall be performed in dynamic and static conditions. Pumping rate during the dynamic video shall be at a minimum 500 gpm. All logging shall be supervised by the Engineer with 24 hours advanced notice. The Contractor is responsible to ensure that logs are complete and include the entire well screen and cased intervals as directed by the Engineer. If the Engineer determines that the video is unacceptable due to poor quality, the Contractor at his expense will obtain the necessary equipment to perform additional logging to the satisfaction of the Engineer. Logging shall be conducted by the Contractor in accordance with Section 02674, Borehole Geophysical Logging and Video Log.

N. If directed, clean out development solids from the well screen, as determined by Engineer.

O. Complete the wellhead as specified in the project drawings.

P. The Contractor shall disinfect the well as soon as construction of the well, wellhead and cleaning procedures are completed or at another time if instructed to do so by the Engineer. Disinfection shall be in accordance with Section 02780, Well Facility Disinfection and Water Quality Sampling.

Q. Perform complete site restoration as described in project specifications.

END OF SECTION

SECTION 02735

MEASUREMENT AND PAYMENT

PART 1 GENERAL

1.01 GENERAL REQUIREMENTS

A. The unit prices stated in the Contract shall be considered payment in full for the completion of all work. Payment shall be made under each item only for work as it is not specifically included under other items.

B. The Contractor shall furnish all labor, equipment and material required to complete the deepening of the existing Surficial aquifer production well 12.

PART 2 PRODUCTS (NOT USED)

PART 3 EXECUTION

3.01 SCHEDULE A - GENERAL ITEMS

A. ITEM NO. 1 – BONDS AND INSURANCE

This pay item shall include the costs of bonds and any required insurance for the start of work, including temporary environmental controls, sanitary facilities and permits. Bonds and insurance shall be paid for at the Contract Lump Sum Price as listed on the Bid Form completed and accepted.

B. ITEM NO. 2 – INDEMNIFICATION

One time Indemnification payment will be made upon the first Application for Payment for the Contract Lump Sum Price.

C. ITEM NO. 3 – GENERAL CONDITIONS

This pay item shall include the costs to comply with all elements of the General Conditions of the Contract, including but not limited to: insurance, record keeping, safety and permitting. Payment shall be made at the Contract Lump Sum Price as identified on the bid form upon completion of work identified in the general conditions. Measurement will be based on the percentage of work complete and does not include the percentage of any stored materials.

D. ITEM NO. 4 – MOBILIZATION/DEMOBILIZATION

The work specified in this item consists of the work and operations necessary in mobilizing and demobilizing for the work on described by the contract documents, including but not limited to, those operations necessary for the movement of personnel, equipment, supplies and incidentals to and from the project site, as required by these specifications, including but not limited to, temporary environmental controls, sanitary facilities, and the special provisions made by State and local laws and regulations. Payment for this item shall be made at 50% of the Contract Lump Sum Price following completion of mobilization and 50% following completion of demobilization to and from the well site

and acceptance by the Owner. The Lump Sum price for mobilization/demobilization shall not exceed 10% of the total contract price.

E. ITEM NO. 5 - REMOVE EXISTING SCREEN AND RISER FROM WELL

This pay item includes the removal of the existing well screen and riser casing from the well and shall be paid at the Contract Lump Sum Price as listed on the bid form. The price shall include but not be limited to the furnishing of all material, labor and equipment necessary to complete the work.

F. ITEM NO. 6 – CLEAN OUT BOREHOLE OF EXISTING WELL

This pay item includes the work required to clean out fill from the existing borehole to the total existing drilled depth, as approved by the Engineer. Payment shall be paid at the Contract Unit Price per linear foot, drilled and accepted, as listed on the bid form. The unit price shall include but not be limited to the furnishing of all material, labor and equipment necessary to complete the work.

G. ITEM NO. 7 – DRILL NOMINAL 8-INCH PILOT HOLE

This pay item includes the actual length of hole drilled and shall be measured vertically from the base of the existing cleaned borehole to a total depth as determined by the Engineer. The drilled hole shall be paid at the Contract Unit Price per linear foot, drilled and accepted, as listed on the bid form. The unit price shall include but not be limited to the furnishing of all material, labor and equipment necessary to complete the work.

H. ITEM NO. 8 – GEOPHYSICAL LOGGING

Logging shall be paid for at the Contract Lump Sum Price as listed on the Bid Form for all logs specified in Section 02765, Geophysical and Video Logging for the production well and shall include but not be limited to furnishing all material, labor and equipment necessary to complete the work.

I. ITEM NO. 9 – REAM NOMINAL 8-INCH DIAMETER PILOT HOLE TO 19-INCH DIAMETER BOREHOLE

This pay item includes the actual length of hole drilled and shall be measured vertically from present total depth of well to the newly completed total depth of the well as directed by the Engineer. The drilled hole shall be paid at the Contract Unit Price per linear foot, drilled and accepted, as listed on the bid form. The unit price shall include but not be limited to the furnishing of all material, labor and equipment necessary to complete the work.

J. ITEM NO. 10 – FURNISH AND INSTALL 12-INCH STAINLESS STEEL SCREEN

The 12-inch screen furnished and installed in place shall be installed to the depth specified by the Engineer as listed on the Bid Form. It shall be paid at the Contract Unit Price per linear foot, installed and accepted, and shall include but not be limited to all labor, equipment and other materials necessary to properly install the screen as described in Section 02750, Well Screen and Gravel.

K. ITEM NO. 11 – FURNISH AND INSTALL 12-INCH DIAMETER SDR17 PVC RISER CASING

The 12-inch riser casing furnished and installed in place shall be installed to the depth specified by the Engineer as listed on the Bid Form. It shall be paid at the Contract Unit Price per linear foot, from

land surface to the total depth installed and accepted, and shall include but not be limited to all labor, equipment and other materials necessary to properly install the casing as described in Section 02745, Well Casing and 02750, Well Screen and Gravel.

L. ITEM NO. 12 – FURNISH AND INSTALL GRAVEL PACK

Gravel pack installation will be paid for at the Contract Unit Price per cubic foot as listed in the Bid Form, including time, equipment and materials necessary for proper installation. Payment will be based on the actual units installed as described in Section 02750 Well Screen and Gravel.

M. ITEM NO. 13 – AIRLIFT DEVELOPMENT

Airlift development shall be paid for at the Contract Unit Price per hour of actual airlift time as determined by the Engineer as described in Section 02760 Well Development. The said Contract Unit Price shall include but not be limited to the furnishing of all material, labor and equipment necessary to complete development as specified. Payment begins upon initiation of development and ends at the completion of successful development as determined by the Engineer. Only time approved by the Engineer will be paid for under this pay item.

N. ITEM NO. 14 – JETTING WITH SIMULTANEOUS AIRLIFT DEVELOPMENT

Jetting with simultaneous airlift development shall be paid for at the Contract Unit Price per hour of actual jetting with simultaneous airlift time as determined by the Engineer as described in Section 02760 Well Development. The said Contract Unit Price shall include but not be limited to the furnishing of all material, labor and equipment necessary to complete development as specified. Payment begins upon initiation of development and ends at the completion of successful development as determined by the Engineer. Only time approved by the Engineer will be paid for under this pay item.

O. ITEM NO. 15 – PUMP DEVELOPMENT

Pump development shall be paid for at the Contract Unit Price per hour of actual pumping time as determined by the Engineer as described in Section 02760 Well Development. The said Contract Unit Price shall include but not be limited to the furnishing of all material, labor and equipment necessary to complete development as specified. Payment begins upon initiation of development and ends at the completion of successful development as determined by the Engineer. Only time approved by the Engineer will be paid for under this pay item.

P. ITEM NO. 16 – CONDUCT STEP RATE PUMPING TEST

The pumping test will be paid for at the unit price per hour of actual pumping time, as listed in the Bid Form and described in Section 02775 Pumping Tests. The said Contract Unit Price shall include the furnishing of all material, labor and equipment necessary to complete the test as specified. Payment begins upon initiation of pumping and ends at completion of pumping. Payment will be based on the actual hours of pump testing as approved by the Engineer.

Q. ITEM NO. 17 – CONDUCT PRE- AND POST- CONSTRUCTION VIDEO LOGS

Acceptable video logs will be paid for at the unit price as listed in the Bid Form and described in Section 02765, Geophysical and Video Logging including time, equipment and materials necessary to

complete the work. Payment will be made at the Contract Unit Price.

R. ITEM NO. 18 – WELL DISINFECTION AND WATER QUALITY SAMPLING

Work under this pay item shall include, but not be limited to, all equipment, materials and labor to satisfactorily disinfect the well, construct easily accessible sampling points, bacteriological sampling and testing, and water quality analytical testing as required by the contract documents, state and local laws and regulations as related to this pay item. Payment of this item will be made at the Contract Lump Sum Price as listed on the Bid Form. The Contractor shall be responsible for costs associated with re-chlorination, re-sampling, and re-testing as needed to satisfactorily disinfect the well and obtain passing and acceptable water quality test results as described in Section 02780, Well Disinfection and Sampling.

S. ITEM NO. 19 – EXTRA WORK BY DRILLING CREW WITH DRILLING EQUIPMENT

Extra work performed by the drilling crew with drilling equipment shall be paid for at the specified Contract Unit Price per hour as listed on the Bid Form based on the amount of approved time used.

T. ITEM NO. 20 – EXTRA WORK BY DRILLING CREW

Extra work performed by the drilling crew shall be paid for at the specified Contract Unit Price per hour as listed on the Bid Form based on the amount of approved time used.

U. ITEM NO. 21 – STANDBY TIME WITH RIG AND DRILLING CREW ON-SITE

If standby time is required with the drilling crew and drilling rig on site, payment shall be made at the specified Contract Unit Price per hour as listed on the Bid Form based on the number of approved hours required.

V. ITEM NO. 22 – STANDBY TIME WITH RIG ON-SITE AND DRILLING CREW OFF-SITE

If standby time is required with the drilling crew off site and drilling rig on site, payment shall be made at the specified Contract Unit Price per hour as listed on the Bid Form based on the number of approved hours required.

W. ITEM NO. 23 – FORMATION WATER DISPOSAL SYSTEM

The work specified under this pay item includes the costs to supply, install, and maintain formation water disposal system as specified in the Contract Documents and accepted by the Engineer. This item includes all labor, material and equipment and removal of the piping from the project site after construction is complete. This pay item also includes the costs to maintain the disposal and settling system and shall include but not be limited to piping, fittings, pumps, monitoring, operation and maintenance. Payment shall be made per Contract Lump Sum Price as listed on the Bid Form.

X. ITEM NO. 24 – SITE RESTORATION

The work specified under this pay item includes restoring the sites to their original condition, the intended grades as shown on the site plan, restoring all side slopes, and sodding all side slopes to the satisfaction of the Engineer and Owner. Payment shall be at the Contract Lump Sum Price as listed on the Bid Form and shall include all equipment, tools and labor necessary to restore the sites complete

and accepted by the Owner.

END OF SECTION

3.02 SCHEDULE B - 2-INCH DIAMETER TEST & MONITOR WELLS

A. ITEM NO. 10 – DRILL NOMINAL 6-INCH BOREHOLE

This pay item includes the actual length of hole drilled and shall be measured vertically from land surface to the total depth of the borehole. The drilled hole shall be paid at the Contract Unit Price per linear foot, drilled and accepted, as listed on the bid form. The unit price shall include but not be limited to the furnishing of all material, labor and equipment necessary to complete the work.

B. ITEM NO. 11 – GEOPHYSICAL LOGGING

Logging shall be paid for at the Contract Lump Sum Price as listed on the Bid Form for all logs specified in SECTION 02765 GEOPHYSICAL LOGGING for the test wells and production well 15 and shall include but not be limited to furnishing all material, labor and equipment necessary to complete the work.

C. ITEM NO. 12 – INSTALL AND GRAVEL PACK 2-INCH STEEL (OR APPROVED ALTERNATE) CASING AND SCREEN

The 2-inch casing and screen furnished and installed in place shall be installed to the depth specified by the ENGINEER as listed on the Bid Form. It shall be paid for by the linear foot, from land surface to the total depth installed and accepted, and shall include but not be

limited to all labor, equipment and other materials necessary to properly install the casing, screen and gravel pack as described in SECTION 02745 WELL CASING and 02750 WELL SCREEN AND GRAVEL. Upon completion of the first test well, the 2-inch casing and screen shall be removed from the well and may be re-used on the subsequent well provided it is in good condition as determined by the ENGINEER.

D. ITEM NO. 13 – WELL DEVELOPMENT AND INTERVAL TESTING

Development and water quality sampling at each depth interval shall be paid for at the Contract Unit Price per hour of actual pumping time or sampling as determined by the ENGINEER as described in SECTIONS 02760 WELL DEVELOPMENT and 02785 FORMATION WATER DISPOSAL. The said Contract Unit Price shall include but not be limited to the furnishing of all material, labor and equipment necessary to complete development and sampling as specified. Payment begins upon initiation of development of each depth interval and ends at the completion of successful sampling as determined by the ENGINEER. Only time approved by the ENGINEER will be paid for under this pay item.

E. ITEM NO. 14 -- CONVERT TEST WELL TO 2-INCH MONITOR WELL

This item shall be paid for at the Contract Unit Price per foot of depth of the monitor well, as determined by the ENGINEER. The said Contract Unit Price shall include but not be limited to the furnishing of all material, labor and equipment necessary to complete the conversion to a 2-inch monitor well. Items covered include, but are not limited to, removal of the test well casing and screen, removal of gravel from the borehole, cleaning/reaming of the borehole to a depth determined by the ENGINEER, installation of new 2-inch PVC casing and screen to the determined depth, gravel pack and grouting.

3.03 SCHEDULE C-SURFICIAL AQUIFER PRODUCTION WELL 15 DEEPENING

SECTION 02740

WELL DRILLING

PART 1 GENERAL

1.01 SCOPE OF WORK

A. This section covers the work, materials, and equipment necessary for drilling the boreholes for the production well.

1.02 SCOPE OF WORK

A. A list of any drilling additives intended for use on this project shall be submitted to the Engineer prior to drilling activities.

B. A list of drilling equipment to be used on this project shall be submitted to the Engineer prior to mobilization, including drill bit diameters and dimensions of staged bit assemblies proposed for drilling.

C. Manufacturer information for water well drilling, copper-free drilling joint compound.

D. Location for disposal of waste solids.

E. Drilling fluid solids management system specifications, mud pump type and pump curve, and anticipated up-hole mud velocities during drilling shall be submitted to the Engineer.

PART 2 SUBMITTALS

2.01 DRILLING EQUIPMENT

A. All equipment shall be in good working condition and suitable for the proposed work. The Contractor will provide assurances that he has the proper equipment to adequately complete the project and overcome possible complications. The Contractor shall provide all materials, equipment and labor reasonably inferable and required for proper completion of the work whether specifically outlined in the Contract Documents or not.

B. The Owner will reserve the right to inspect the equipment of each Contractor submitting a bid as a part of the evaluation of bids.

C. The Contractor will provide all tools, bits, and all other necessary equipment for drilling.

D. Drilling equipment shall be capable of performing applicable drilling methods within the established time of construction.

E. The Contractor will take special precautions to reduce to a minimum the nuisances and damage to property which could result from working adjacent to a road. Any damage to public or private property will be immediately repaired or paid for by the Contractor at no expense to the Owner. Equipment, tools and materials will be located in places where they will produce a minimum of nuisance. Contractor will take appropriate action to minimize noise, light and other nuisances caused

by the drilling operation. The appropriate warning signs will be posted on the streets and the appropriate police will be informed of the location of the construction site.

2.02 DRILLING FLUID

A. The Contractor will provide all drilling fluids, water, and additives as required. Surface water shall not be used for any drilling or construction activities.

2.03 TEST AND SAMPLING EQUIPMENT

A. Provide equipment for measuring drilling fluid properties including a marsh funnel, viscosimeter, filter press and a fluid density balance.

B. Provide sampling bags or containers for collection and storage of formation samples.

PART 3 EXECUTION

3.01 GENERAL REQUIREMENTS

A. Notify the Engineer 7 days prior to drilling. Normal working hours shall be compliant with the City Code. Should the Contractor desire to carry on his work at night or outside regular working hours, they shall submit written notice to the Owner/Engineer and allow a minimum of 48 hours for satisfactory arrangements to be made and for inspecting the work in progress.

B. Provide at all times a thoroughly experienced, competent, and Florida licensed driller during all operations at the drill site. Provide sufficient competent driller's helpers during all operations at the drill site.

3.02 DRILLING

A. Anticipated borehole depths and diameters for the test well and the Surficial Aquifer production well is depicted on the project drawings. Borehole diameters are considered nominal dimensions. The Contractor shall recommend the appropriate bit size for drilling the correct borehole diameter. Borehole depths provided in the specifications are estimates, only; actual depths may vary and will be determined by the Engineer.

B. Boreholes shall be advanced in such a manner that the drilled hole will proceed straight and plumb. The drilling rate shall be optimized for cuttings removal with minimal mixing and accurate formation sample collection. Pilot boreholes shall be advanced in 5-feet increments for more accurate sample collection. Cuttings shall be predominantly cleared from the borehole at the end of each increment (5-feet increments for pilot holes and reverse air drilled holes, 20 feet increments for reamed holes).

C. Boreholes shall be drilled and conditioned to permit geophysical logging and casing installation as per Section 02740, Well Drilling and Section 02745, Well Casing. The borehole shall be cleared of cuttings and stable to permit subsequent tasks to be completed without impairment.

D. The reaming assembly shall consist of a lead bit with the same outer diameter as the pilot hole and progressively larger diameter bits up to the reamed hole diameter. The reaming assembly should not exceed 8 feet in length.

3.03 DRILLING FLUIDS

A. All drilling fluid storage tanks shall be above ground. Dug mud pits will not be permitted. Tanks shall be of sufficient length and construction to allow settling or removal of cuttings and prevent their reintroduction to the borehole. A mud system shall be used that includes a vibratory shale shaker and centrifugal desanders. Mud tanks shall be of sufficient length and construction to allow settling or removal of cuttings and prevent their reintroduction to the borehole.

B. The Contractor shall routinely monitor and record drilling fluid properties including mud weight, viscosity, gel strength, pH, liquid and solids content. Monitoring shall be in accordance with manufacturer's recommendations, AWWA and International Association of Drilling Contractors (IADC). The mud and solids management systems used by the Contractor for this project shall meet the Contractor's proposed drilling fluid manufacturer specifications for the intended application.

3.04 ALIGNMENT REQUIREMENTS

A. Pilot holes and reamed holes shall be drilled round and straight throughout.

B. The completed well will be sufficiently plumb and straight so that there will be no interference with installation, alignment, operation or future removal of the permanent well pump.

3.05 COMPLIANCE WITH GOVERNMENTAL REGULATIONS

C. Construct the well in strict conformance with all laws, rules, regulations, and standards related to the construction of wells in the State of Florida and local regulatory agencies.

3.06 FORMATION SAMPLES

A. One (1) set of representative formation samples shall be collected by the Contractor for the well. Samples shall be taken at each 5-foot level and each change in formation or material type. The method must yield samples that are representative of the actual depth to which drilling has progressed.

B. Each sample shall be approximately 8 ounces and be placed in a cotton, soil sample bag, Hubco or equivalent, or as approved by Engineer. Each sample shall be labeled with the date, well identification, and depth from which the sample was taken clearly marked on the container in indelible ink. The Contractor will store and protect the samples from damage or disturbance until they have been released to and accepted by the Engineer.

3.07 DRILLING LOGS

A. Prepare a daily drilling log for inspection and submittal to the Engineer. Include in the log the depths and type of geologic formation encountered; drilling penetration rate, in minutes, for each five feet interval; general formation hardness based on drilling; type of drilling, chemical, water and mud additives; loss of circulation zones; additives to the well to control flow; water added to supplement reverse air drilling; problems during drilling; date, time, and depth for each entry. The log shall be kept current with a copy located at the drill site. The Contractor shall maintain an up to date drill string tallies and will be available for inspection by the Engineer.

B. A final well log shall be prepared that includes copies of the above. An as-built drawing of the well shall be submitted showing casing dimensions and details; screen and riser dimensions; gravel pack type, size, placements depths; and borehole dimensions.

C. Submittals will be made as required to the appropriate regulatory agencies per the applicable local, state and federal regulations. The Contractor will provide copies of all submittals to the Engineer.

3.08 WASTE DISPOSAL

A. All solid and liquid waste, including but not limited to drilled solids, cuttings, drilling mud, drilling additives, spent or unused chemicals and unused products shall be disposed of or recycled by the Contractor in an environmentally responsible manner and in accordance with applicable regulations. The disposal or recycling location must be identified in a submittal to the Engineer. Prior to disposal, the location must be accepted by the Engineer. The Contractor will prevent wastes from migrating from the designated construction area and cuttings storage area. The Contractor will promptly clean up drilling by-products that migrate outside of the designated construction area. Further, the Contractor will minimize the spillage of formation water at all times and promptly repair leaks where formation water may be released to the ground surface.

B. Remove from the drilling site all cuttings and other material removed by the drilling operations that are not required to complete the work. Solid material shall be disposed of in accordance with local and state regulations at an approved disposal site, approved by the Engineer. Removal of cuttings, mud and formation water from the site is considered incidental to the Work and does not constitute additional payment to the Contractor.

C. Depressions left in the land surface from the cleanup of residues, or for any other reason resulting from the Contractor's activities, shall be filled with clean fill material and graded smoothly.

END OF SECTION

SECTION 02745

WELL CASING

PART 1 GENERAL

1.01 SCOPE OF WORK

A. This section covers the work, equipment and materials necessary for furnishing and installing the well casing.

1.02 SUBMITTALS

A. Provide manufactures specifications and technical data on all well casings, centering guides, and casing elevators prior to installation.

PART 2 PRODUCTS

2.01 GENERAL REQUIREMENTS

A. All casings will be approved for use in municipal public supply wells, and to the specifications as outlined. Casing material and dimensions are provided in Section 02720, Well Construction Sequence and contract drawings. The Contractor will furnish and satisfactorily install each string of casing. All casings will be new, unused and in good physical condition. Warped or damaged casing will be rejected.

B. The Contract will indicate an estimate for the amount of casing. The Owner or the Engineer will determine actual lengths. The Contractor shall be responsible for ensuring that the selected casing will withstand all stresses of construction without impairment.

C. The Contractor will provide the Engineer with an inventory of all casing delivered to the site and maintain a tally during installation.

D. All casing sections shall each be clearly marked with type, grade and manufacturer. If required by the Engineer, the Contractor shall provide additional backup supporting documentation from the manufacturer. Casing connections shall meet manufacturer specifications for water tightness. Connections shall have equal strength as the casing itself.

2.02 STEEL CASING

A. Not applicable.

2.03 POLYVINYL CHLORIDE (PVC) CASING

A. PVC casing and couplings shall be 12-inch (12.75-inch outside diameter) SDR17 Certa-lok by Certainteed or equivalent. Any equivalent casing selected must be shown to have sufficient joint and tensile strength, internal pressure rating, resistance to collapse and ability to withstand all stresses of construction. Any alternates must be approved in advance by the Engineer.

B. All casings shall be clearly marked with type, grade and manufacturer. If required by the Engineer,

the Contractor will provide additional backup supporting documentation from the Manufacturer.

C. Only the PVC manufacturer approved joint compound will be used for pipe assembly. The joint compound will be approved for water well construction.

D. Only Certainteed Certa-lok splines will be used with Certa-lok couplings. The Contractor shall provide a copy of the installation and connection procedure on site for review prior to casing assembly. The fabricated reducer bushing shall have strength equal to or greater than the couplings.

E. Final PVC well casing shall be completed as shown on the drawings.

F. Bills of lading shall be provided for casings delivered for well construction.

2.04 CENTERING GUIDES

A. Casing centering guides (centralizers) will be placed on all casing strings, prior to installation, at 30-foot intervals with the first set of centralizers placed within 5 feet from the bottom of the casing. Centralizers will be fixed to the casing at coupling locations.

B. Centralizer material will be steel when attached to carbon steel and stainless steel when attached to PVC casing. Guides will be welded when attached to steel; and steel strapped to PVC.

C. Fixed centering guides shall extend outward from the casing to within 1/2 inch of the maximum drill bit dimension.

PART 3 EXECUTION

3.01 GENERAL

A. Casings will be installed and completed as described in the specifications and drawings. Actual casing depths will be determined by the Engineer.

B. The casing installation method shall be approved in advance by the Engineer and be consistent with manufacturer specifications.

C. Casing failure by any means, including but not limited to: any collapse, breakage, separation, dents, tears or rips during construction that in any way impairs the use of the well in the opinion of the Engineer, shall be repaired or replaced at the Contractor's sole expense.

D. Casing connections shall meet manufacture specifications for water tightness. Connections shall have equal strength to the casing itself.

E. Steel casings shall have machine cut beveled ends and will be arc welded together by the standards of the American Welding Society. Welded casings shall be straight and true of alignment to the satisfaction of the Engineer. Only certified welders may perform the outlined work; proof of certification must be presented to the Owner if requested

F. Casing elevators must be approved by the Engineer before use.

3.02 WELDING

A. All welding performed shall be in accordance with the American Welding Society (AWS D1.1) and all applicable AWS and ASTM standards.

B. The Contractor shall provide to the Engineer verification of state of Florida certification of all welders performing work prior to casing installation. The Contractor and the certified welder shall be responsible for the integrity of all steel casing welds.

END OF SECTION

SECTION 02750

WELL SCREEN AND GRAVEL PACK

PART 1 GENERAL

1.01 SCOPE OF WORK

A. This section covers the work, equipment and materials necessary for furnishing and installing the well screen and gravel pack.

1.02 SUBMITTALS

A. Provide data on all proposed additives and manufacturer's specifications.

B. Provide manufactures specifications and technical data on all screens and gravel to be provided for well construction.

C. Provide grain size distribution data on gravel pack and a 16 ounce sample prior to use.

D. Provide shop drawings showing screen/PVC casing transition coupling.

PART 2 PRODUCTS

2.01 GENERAL REQUIREMENTS

A. All screens shall be approved for use in municipal public supply wells, and to the specifications as outlined. The Contractor shall furnish, satisfactorily install and gravel pack the string of well screen and riser casing. All screens, riser casings couplings and adapters shall be new, unused, in good physical condition and delivered to the site in the original protective wood crates as provided by the manufacturer. Warped or damaged materials will be rejected.

B. The well screen to be used for the construction of the production well shall be 12-inch diameter continuous slot, type 316 stainless steel well screens, of V-slot design, manufactured by Johnson Well Screens, Inc., or approved equal. Screen section shall be joined by welding connections. The weld will not decrease the corrosion resistance of the screen. If required, blank sections within the screened interval shall be "tight wound" type 316 stainless steel screen having less than 0.001" slot openings. The Engineer will determine the screen slot size within 5 working days of borehole drilling completion and Contractor submittal of sample gravel pack.

C. The Bidding Documents indicate an estimate of the screen length. Actual lengths shall be determined by the Engineer.

2.02 RISER CASING

A. Riser casing shall consist of 12-inch outside diameter (O.D.) SDR17 Certainteed Certa-lok PVC casing and be in accordance with the casing requirements provided in Section 02745, Well Casing. For estimation purposes, the riser interval is shown on the project drawings; however, the amount of riser required may change based on the amount required. The riser will be continuous from the top of the screen to land surface or as determined by the Engineer.

B. The riser casing will be securely connected with a coupling adapter to the stainless steel screen by Certainteed and installed by Engineer approved method. The Contractor is responsible for the intact placement of the screen and riser pipe to the depth specified by the Engineer.

2.03 CENTERING GUIDES

A. Casing centering guides (centralizers) shall be placed on the screen and casing, prior to installation, at 30 feet intervals with the first set of centralizers placed within 5 feet from the bottom of the screen. Centralizers shall be fixed to the casing at weld ring or coupling locations. Centralizers shall be aligned so that they do not interfere with installation of gravel and cement installation tubing.

B. Centralizer material shall be stainless steel or approved alternate. Guides shall be welded when attached to steel; and screw attached using a 1/4 inch screws or lags that penetrate not more than 80 percent of the coupling and casing when attached to PVC. Any casing penetrated will be rejected and shall be replaced at the Contractor's expense.

C. Centralizer material shall be non ferrous and will not be attached by drilling into the casing. No ferrous materials will be used for attachment.

2.04 GRAVEL PACK MATERIAL

A. Gravel pack material shall be a minimum of 95% silica, approved by the Engineer, sorted and graded so that there is 90% retention on the well screens installed. The Contractor shall provide a grain size analysis of gravel to be used during well construction. Based on the Contractor provided sample and grain size analysis, the Engineer shall provide to the Contractor well screen slot size.

B. The type of gravel pack selected will be from a supplier located within the State of Florida.

PART 3 EXECUTION

3.01 GENERAL

A. Screens and casing risers shall be installed as described in the specifications and drawings. Actual casing depths will be determined by the Engineer.

B. The screen assembly and installation method shall be approved in advance by the Engineer and be consistent with manufacturer specifications.

C. Gravel pack will be installed in a water slurry by the tremmie method. The base of the tremmie pipe shall be placed at the gravel placement depth and be moved upward consistent with the gravel fill depth.

D. Water required for the construction of the well shall be potable and meet primary and drinking water standards pursuant to Chapters 62-3 and 62-550 Florida Administrative Code.

E. Screen or casing failure by any means, including but not limited to: collapse, breakage, separation, dents, tears or rips during construction, that in any way impair the use of the well in the opinion of the Engineer, shall be repaired or replaced at the Contractor's sole expense.

F. Casing connections shall meet manufacture specifications for water tightness. Connections shall have

equal strength as the casing itself.

END OF SECTION

SECTION 02760

WELL DEVELOPMENT

PART 1 GENERAL

1.01 SCOPE OF WORK

A. This section covers the labor, equipment and materials required to perform development of the well.

B. The Contractor shall develop the well using a combination of compressed air, jetting with simultaneous airlift, and pumped water, until, to the satisfaction of the Engineer, the discharge water is free of sediments and the gravel pack has stabilized.

C. The Contractor is solely responsible, by any and all methods necessary, to meet the requirements for discharge of water. If the Contractor fails to fulfill proper requirements of discharge water, the Contractor is responsible for complete restoration of the discharge location to the original condition at no cost to the Owner.

1.02 SUBMITTALS

A. Provide certificates of calibration for flow meters to be used for flow measurement by the Engineer.

B. Provide shop drawings showing dimensions of the jetting tool.

C. Submit a pump curve prior to installation for approval by the Engineer.

D. Completed daily development logs for weekly submittal to the Engineer.

PART 2 PRODUCTS

2.01 DEVELOPMENT EQUIPMENT

A. Provide all pumps, motors, air compressors and other ancillary equipment needed to develop the well to the extent that, as practical, suspended solids are removed from the well bore. Provide all pipe, fittings, and valves required to transmit discharge water from the pump to the settling tanks as required in Section 02785, Formation Water Disposal System.

B. The test pumping equipment shall have access ports, water level measurement setup and discharge piping as required in Section 02775, Pumping Tests.

C. The Contractor shall provide a calibrated flow meter near the pump. The flow meter shall be accurate and precise within the range of 300 gpm to 2,000 gpm. The placement of the flow meter shall be in accordance with manufacturer recommendations for flow meter placement. The Contractor shall also consult the Engineer for optimal flow meter placement. Air release valves shall be provided and installed by the Contractor. The Contractor shall supply an orifice weir or other Engineer approved method to verify pumping rates.

PART 3 EXECUTION

3.01 WELL DEVELOPMENT

A. Develop the well using compressed air lift at a minimum air flow rate of 750 cubic feet per minute. The base of the air discharge will be set at the base of the screen during initial the development period. The initial airlift phase shall be not less than 8 hours. This step shall be considered initial development to remove the majority of drilling fluid from the borehole and to confirm the stability of the gravel pack. Air development shall include varying the depth of air discharge and periodically surging the well with the use of a surge tank. The top of the gravel pack shall be continuously monitored during air lift. If the top of the gravel pack is below the top of the desired level, then gravel must be added.

B. Following initial development, high velocity jetting shall be done using chlorinated water for a period of time to be determined by the Engineer. A high velocity jetting tool having 4 nozzles shall be rotated and moved vertically throughout the entire screened portion of the well while chlorinated water is forced through the screen and into the gravel pack. The jetting tool and pumping equipment shall deliver a minimum flow rate of 500 gpm per nozzle. Each shall have an internal diameter of 1.0 inch. Alternate nozzle sizes and flow rates may be proposed. However, a minimum jetting velocity of 50 feet per second shall be maintained. The initial phase of jetting shall be done using a solution of BMR and chlorinated water having a minimum chlorine concentration of 50 milligrams per liter (mg/l). Thereafter, fresh water may be used for jetting development. Occasionally, at the direction of the Engineer, accumulating sand in the screen shall be removed by lowering the air lift set up to the bottom of the well.

C. After thoroughly jetting and surging the well with the jetting tool, well development shall be completed using air lift at the base of the screen to clean out development solids from borehole or directed by the Engineer.

D. Throughout development, at intervals specified by the Engineer, the Contractor shall conduct sand testing. Sand testing shall be conducted using a Rossum Sand Tester, or approved equal method.

E. On a daily basis prior to start-up of airlift and jetting development and at other times as directed by the Engineer, the Contractor shall pump the well and accurately measure the static water level, drawdown, specific capacity and depth to the gravel pack. The pump shall be capable of a discharge rate of 100 gpm with a minimum drawdown of 25 feet below the pump level.

F. After air lift and jetting with simultaneous airlift developments, the Contractor will continue development using the test pump setup (as described in Section 02775, Pumping Tests). The Contractor shall pump surge the well until, to the satisfaction of the Engineer, the pump discharge water is free of suspended material. The test pump will be capable of maintaining a steady pumping rate of 1,500 gallons per minute (gpm) and on/off surging.

G. Upon completion of development or at other times as directed by the Engineer, the Contractor will check the total depth of the well in the presence of the Engineer.

3.02 DISCHARGE WATER

A. The Contractor shall construct temporary settling tanks for settlement of solids from the discharge water in accordance with Section 02785, Formation Water Disposal System. A transfer pump shall be

used to pump discharge water to the designated outfall location if required by the Engineer. The Contractor shall provide sufficient temporary piping to transmit formation water from the well site to a discharge point as shown on the Contract Drawings. The Contractor shall set up and maintain discharge water transmission hose as determined necessary.

B. Discharge water shall always be contained and under control by the Contractor. Any erosion that results from the discharge water shall be immediately repaired by the Contractor to its previous non-eroded condition.

C. If required by the Engineer, silt booms will be provided, installed and maintained by the Contractor in any surface water body receiving the discharge water.

D. The Contractor shall ensure that the discharge water does not impact adjoining property unless it is specifically approved by the Engineer, does not flood streets or impede any traffic flow in any way, and does not cause a nuisance in general.

END OF SECTION

SECTION 02674

BOREHOLE GEOPHYSICAL LOGGING AND VIDEO LOG

PART 1 GENERAL

1.01 SCOPE OF WORK

A. This section covers the equipment, work and materials necessary to perform geophysical logging of the well.

B. Provide the following geophysical logging and well survey equipment:

1. Dual Induction
2. Short normal, long normal, lateral and single point resistivity logs
3. Natural gamma log.
4. Spontaneous potential log.
5. Caliper log.
6. Video log.

PART 2 PRODUCTS (NOT USED)

PART 3 EXECUTION

3.01 GENERAL

A. All logging shall be supervised by the Engineer with 24 hours advanced notice. The Contractor is responsible to ensure that logs are complete and include the entire borehole and cased intervals as directed by the Engineer. Logging should be done as soon as possible after the drilling tools have been removed from the logged interval.

B. When the hole has been drilled to a depth determined by the Engineer, it must be prepared for geophysical logging. Borehole preparation will include but not be limited to: i) continuation of drilling fluid circulation until drill cuttings have been removed from the borehole, and the fluid is uniform in the borehole; or ii) reverse air pumping until the discharge water is free of cuttings and suspended sediment. The Contractor must make all reasonable efforts to leave the borehole free from obstructions in preparation for geophysical logging. Logging must be done immediately following the completion of borehole preparation unless otherwise stated in the Contract or as stipulated by the Engineer.

C. Each log must be run and recorded in a continuous fashion to qualify as an acceptable log.

D. The Contractor is responsible to ensure that the logs are complete. Any obstructions or fill material or borehole of reduced diameter more than 1/2-inch in the borehole or cased intervals will be removed or reamed by the Contractor at his own expense.

E. All logs will include a repeat section of not less than 50 feet of the portion of the hole. The Engineer will determine the repeat section.

F. All logs shall be appropriately labeled with all appropriate information. Two (2) field copies shall be made available to the Engineer upon completion. Five (5) copies of finished logs are to be provided within two weeks of logging. The Contractor will furnish three (3) copies of the video to the Owner.

G. A down hole video log in DVD format will be conducted to inspect the casing and screened interval of the well prior to demobilizing the drilling rig. The video will be conducted in the presence of the Engineer. The video camera lens will be color and capable of 360 degree movement; be controlled by the logging technician; be independent of the camera body; and have focus capability. The video camera will be centralized in the borehole. The centralizers will self-adjust to different casing and hole sizes as necessary. If the Engineer determines that the video is unacceptable due to poor quality, the Contractor at his expense will obtain the necessary equipment to perform additional logging to the satisfaction of the Engineer.

H. Video logging will be conducted under both static and pumping conditions at the direction of the Engineer. Contractor shall ensure that the well is pumped sufficiently to ensure adequate visibility for the video survey as determined by the Engineer. Contractor shall use a submersible pump capable of a minimum of 500 gpm discharge rate.

I. Following completion of the well video, the Contractor shall clean out development solids from borehole if necessary, as determined by Engineer at no additional cost to the Owner.

SCHEDULE OF GEOPHYSICAL AND VIDEO LOGS

Construction Phase	Log Type
Pre-construction	Static and dynamic color well video with rotating lens
Completion of 8-inch pilot hole	Dual Induction, short normal, long normal, lateral and single point resistivity, spontaneous potential, caliper, natural gamma ray
Well Completion	Static and dynamic color well video with rotating lens

END OF SECTION

SECTION 02775

PUMPING TESTS

PART 1 GENERAL

1.01 SCOPE OF WORK

A. This section covers the labor, equipment and material required to perform a step rate pumping test on the production well. The scope of work specified in this section also may be applicable to other sections by reference in those sections.

1.02 SUBMITTALS

A. Provide certificates of calibration for flow meters to be used for flow measurement by the Engineer.

B. Submit a pump curve prior to installation for approval by the Engineer.

PART 2 PRODUCTS

2.01 TEST PUMP

A. Furnish the necessary instruments and pumping equipment capable of pumping at a steady rate ranging from 300 gpm to 1,500 gpm with a throttling device and gate valve so that the flow rate can be adjusted as directed by the Engineer.

B. Furnish a gate valve, orifice plate and manometer to control and measure discharge. The Contractor shall supply an orifice weir or other Engineer approved method to verify pumping rates.

C. Provide and install a 1 1/4-inch ID drop tube between the pump column and casing, from the water level access fitting at the wellhead to 5 feet above the pump intake. The drop tube will enable the Engineer to measure water levels without interference of the pump or pump column.

2.02 FLOW METER

A. Provide a calibrated flow meter with direct measurement and a totalizer to measure flow. Anticipated metered flows shall range from 300 to 1,500 gpm. Certification shall be no older than 60 days prior to notice to proceed and attest to an accuracy of 95 percent or greater for the range of the meter. The Contractor will supply an orifice weir to verify pumping rates.

2.03 DISCHARGE PIPING

A. Discharge water will be conveyed via pipe, hoses, fittings, and valves required to transmit discharge water from the pump to discharge point.

PART 3 EXECUTION

3.01 PUMPING TEST

A. Install and operate the pumping test equipment. Pumping test shall consist of five steps to be

performed at rates of between approximately 300 and 1,500 gpm or at other rates determined by the Engineer. Step duration shall continue until drawdown in the production well stabilizes or a maximum of approximately two hours per step. The Contractor shall determine the appropriate engine and gate valve settings for the desired pumping rate prior to the start of the test in order to achieve a constant rate as soon as possible after the start of the test.

B. Sufficient time shall be permitted for the Engineer to collect a static water level in the well prior to step rate and constant rate pumping tests. The static water level shall be measured by the Contractor prior to the start of pumping.

C. The Contractor shall furnish a gate valve, orifice plate and manometer to control and measure discharge.

D. Discharged water shall be conducted from the pumped well to a location shown on the Contract Drawings or as otherwise directed by the Engineer. Discharged fluid shall be piped so as to prevent the recirculation of the discharged water into monitored aquifers.

E. All equipment necessary to conduct these tests shall be supplied, operated, manned, and maintained by the Contractor. The Contractor shall be responsible for failure of equipment and materials associated with the pumping tests, and for negligence on the part of the Contractor. In the event of such failure or negligence that results in re-running the pumping test, the Contractor shall repeat the test at the Contractor's own expense.

F. Under no circumstances shall the test pumping equipment create a vacuum within the well casing.

3.02 DISCHARGE WATER

A. Discharge water shall be in accordance with the requirements in Section 02785, Formation Water Disposal System.

END OF SECTION

SECTION 02780

WELL DISINFECTION AND WATER QUALITY SAMPLING

PART 1 GENERAL

1.01 SCOPE OF WORK

A. Provide labor, equipment and materials to disinfect the production well pursuant to the requirements of AWWA C654-03; including pump facilities, wellhead, and piping according to the requirements of AWWA C-601.

B. Provide labor, equipment and materials to perform analytical tests including (1 complete set) Chapter 62-550 Florida Administrative Code (FAC) drinking water analysis on the production well. The Contractor shall subcontract with an analytical laboratory to perform analytical services in accordance with regulations. All water samples required shall be collected by an employee of a laboratory certified to perform drinking water analysis in accordance with F.S.§ 403.863 and Chapter 64E-1, F.A.C. The NELAC laboratory shall be certified to perform the scope of work by the Florida Department of Environmental Protection and Palm Beach County Health Department.

1.02 SUBMITTALS

A. State and County certifications for proposed laboratory, if requested.

B. Provide sampling reports, completed chain of custody forms and analytical results for all consecutive sampling events.

C. Bacteriological Testing Results

PART 2 PRODUCTS

2.01 MATERIALS

A. Sodium Hypochlorite or approved equal.

PART 3 EXECUTION

3.01 WELL FACILITY DISINFECTION

A. Provide notice to Engineer 48 hours in advance of treatment. Provide injection and measurement methods for approval.

B. Post warning notices and secure the well facility from unauthorized access or use. Secure the area.

C. The Contractor shall disinfect the well as soon as constructions of the well and cleaning procedures have been completed. The Contractor shall carry out adequate cleaning procedures immediately preceding disinfection where evidence indicates that normal well construction and development work have not adequately cleaned the well. All oil, grease, soil, and other materials, which could protect bacteria from disinfectants shall not be allowed in the hole. If evidence indicates that this material has entered the hole, it shall be thoroughly removed. The cleaning operation is to be carried out by

pumping and swabbing only. Where test pumping equipment is to be used, such equipment shall be thoroughly scrubbed, or otherwise cleaned of foreign material.

D. Mix a sufficient concentration of chlorinated water solution to maintain a 200 parts per million chlorine residual throughout the well, pump and added piping facilities. Any well components sensitive to free chlorine or disinfecting agents will be disinfected and installed separately to prevent damage.

E. Disinfection procedures shall ensure that the disinfecting agent is uniformly applied throughout the entire water depth of the well, without relying on subsequent mechanical or surging action for dispersing the disinfectant. For this purpose, the disinfecting agent shall be furnished or prepared in liquid form and placed in the well through a hose or liquid form and placed in the well through a hose or tremmie of sufficient length to extend to the bottom of the well. The disinfecting agent shall be applied through the hose, which is to be raised and lowered, to achieve uniform distribution of the solution throughout the well.

F. All portions of the well above the water shall be maintained in a damp condition with water containing the required concentration of disinfecting agent for a period of not less than 20 minutes. The disinfecting agent shall be left in the well for a period of at least 24 hours.

G. After a 24 hour or longer contact period, the well shall be pumped to clear it of the disinfecting agent. The disposal point for the purged water shall be selected so as to minimize potential damage to aquatic life or vegetation. Contractor may be requested to treat the purged water with a dechlorination agent prior to discharge.

H. All water used for disinfection shall be potable and from a contaminant free source.

I. The complete disinfection program and methods followed, especially if materially different from the AWWA standard shall be presented to the Engineer for review and acceptance.

3.02 BACTERIOLOGICAL ANALYSIS

A. Purge detectable chlorine solution from the well facility.

B. Following well disinfection, collect ten (10) water samples at an approved location over a minimum of 5 days after disinfection procedure. Sample collection and handling procedures shall be in accordance with state approved laboratory quality assurance plan by an experienced sampling technician.

C. The Contractor shall continue to treat and conduct sample collection and analysis until acceptable results are obtained, in accordance with AWWA procedures. Any system disinfection (or any component thereof), sample collection or analysis required after an unsuccessful first attempt, shall be conducted at the Contractor's expense.

3.03 WATER QUALITY ANALYSIS

A. Purge a minimum of five (5) well volumes of formation water from the production well. The Contractor shall coordinate with the Engineer and Owner for water quality analysis.

B. Collect one (1) set of water samples from the well for drinking water analysis. The Contractor shall subcontract an analytical laboratory to perform field sampling and analytical services in accordance

with regulations. Sample analyses shall include all drinking water parameters required in Florida Department of Environmental Protection, Chapter 62-550 FAC. Sample collection and handling procedures shall be in accordance with state approved laboratory quality assurance plan by an experienced sampling technician.

END SECTION

SECTION 02785

FORMATION WATER DISPOSAL SYSTEM

PART 1 GENERAL

1.01 SCOPE OF WORK

A. Provide labor, equipment and materials to furnish, assemble and maintain pumps, transmission piping, settling tanks and other methods as required to transmit formation water from the Contractor's construction wellhead, to the discharge location as shown on the attached Project Drawings. All formation water discharged from the well must be contained at all times and be directed to the outfall via the formation water disposal system. discharge water shall be routed to the following outfall location: adjacent discharge pond located north of the well site. At no time shall direct discharge of formation water to Lake Osborne be permitted.

B. The Contractor shall provide the Engineer access to collect water samples as needed to monitor discharge water quality.

C. The Contractor is solely responsible, by any and all methods necessary, to meet the requirements for discharge of water. If the Contractor fails to fulfill proper requirements of discharge water, the Contractor is responsible for complete restoration of the discharge location to the original condition at no cost to the Owner.

PART 2 PRODUCTS

2.01 EQUIPMENT

A. The Contractor shall provide temporary transmission piping, couplings, valves, fittings and other items needed to assemble, operate and maintain the formation water disposal system. The Contractor shall maintain the transmission piping and ensure that it is free of leaks at all times. Any leaks found shall be repaired immediately. Transmission piping may be required from the well to the settling tanks and from the settling tanks to the discharge location. Multiple vessels may be connected parallel or in series to provide sufficient retention time for solids separation prior to fluid discharge.

B. The Contractor shall provide, operate and maintain as many pumps as required to transmit water from the well to the discharge location. The pumps shall be capable of pumping at the maximum rates for the elements of work contemplated herein.

C. The Contractor shall employ all means necessary to ensure that the erosion and turbidity at the discharge location does not exceed the prescribed limits.

PART 3 EXECUTION

3.01 PREPARATION

A. Review pipeline location with Engineer to confirm proper location and to minimize impact to site operations. The pipeline will be buried when crossing site access roads, or pedestrian paths.

3.02 CONSTRUCTION

A. Assemble the transmission piping as required to facilitate treatment and disposal of formation water.

3.03 OPERATION

A. The formation water disposal piping will be monitored continuously for leaks and possible problem areas. A thorough inspection of the complete pipeline shall be conducted daily prior to startup. Repairs will be made prior to use.

B. The Contractor shall coordinate discharge formation water activities with the Engineer.

C. Pumps shall be capable of pumping water at the anticipated maximum rates of flow. Throttling devices shall be provided on the pumps to adjust the pumping rates accordingly. Valves shall be provided as needed to shut off flow and stop gravity drainage if necessary.

D. Provide safety measures and controls as needed.

END OF SECTION

SECTION 02938

SODDING

PART 1 GENERAL

1.01 SECTION INCLUDES

A. Preparation of subsoil.

B. Placing topsoil.

C. Fertilizing.

D. Sod installation.

E. Maintenance.

1.02 REGULATORY REQUIREMENTS

A. Comply with regulatory agencies for fertilizer and herbicide composition.

1.03 DELIVERY, STORAGE, AND HANDLING

A. Deliver sod on pallets. Protect exposed roots from dehydration.

B. Do not deliver more sod than can be laid within 24 hours.

1.04 EXISTING CONDITIONS

A. All existing grass areas which are damaged or destroyed during construction are to be replaced with new sod of the same variety, unless otherwise noted, which existed prior to construction.

B. In all cases, Contractor is responsible for the restoration of the grass to the conditions that existed prior to construction.

1.05 FIELD MEASUREMENTS

A. On pipeline projects, sodded areas will be measured based on maximum trench widths shown on the Drawings. Sod placed in excess of the maximum trench widths or limits detailed on the Drawings will be at the full expense of the Contractor.

PART 2 PRODUCTS

2.01 MATERIALS

A. Topsoil: Muck; free of plants, weeds, and roots.

B. Sod: In Kind. Live, fresh, and uninjured at time of planting, free of objectionable weeds, and have a soil mat of sufficient thickness adhering firmly to the roots to withstand all necessary handling. Transport within 24 hours after being stripped and plant as soon as possible.

C. Fertilizer: 6 percent nitrogen - 6 percent phosphoric acid - 6 percent potash, 40 percent organics.

D. Water: Free of excess and harmful chemicals, acids, alkalies, or any substance which might be harmful to plant growth. Salt water not allowed.

E. Wood Pegs: Softwood; sufficient size and length to ensure anchorage of sod on a slope.

PART 3 EXECUTION

3.01 PREPARATION OF SUBSOIL

A. Prepare subsoil to eliminate uneven areas and low spots. Maintain lines, levels, profiles and contours. Make changes in grade gradual. Blend slopes into level areas.

B. Remove foreign materials, weeds and undesirable plants and their roots. Remove contaminated soil.

3.02 PLACING TOPSOIL

A. Spread topsoil to a minimum depth of 2 inches over area to be sodded.

B. Place topsoil during dry weather.

C. Roto-till to a depth of 6 inches.

D. Fine grade the area to be sodded to eliminate ridges, depressions and other irregularities, and to ensure positive drainage.

3.03 FERTILIZING

A. Apply fertilizer uniformly at a rate of 16 pounds per 1000 square feet.

B. Apply after smooth raking of topsoil and prior to installation of sod.

C. Apply fertilizer no more than 48 hours before laying sod.

D. Lightly water to aid the dissipation of fertilizer.

3.04 SOD INSTALLATION

A. Moisten prepared surface immediately prior to laying sod.

B. Place sod on the prepared surface with edges in close contact and embed firmly and smoothly by light tamping with appropriate tools.

C. Do not stretch or overlap sod pieces.

D. Where sodding is used in drainage ditches, the setting of the pieces must be staggered to avoid a continuous seam along the line of flow.

E. In order to prevent erosion caused by vertical edges at the outer limits, tamp the outer pieces of sod so as to produce a feather edge effect.

F. On slopes 6 inches per foot and steeper, lay sod perpendicular to slope and secure every row with wooden pegs at maximum 2 feet on center. Drive pegs flush with soil portion of sod.

G. After installation, saturate sod with water to a depth of 4 inches into the soil.

H. After sod and soil have dried, roll sodded areas to ensure good bond between sod and soil and to remove minor depressions and irregularities.

I. After rolling, keep sod moist for the duration of the contract period and in no case less than 2 weeks. The moistened condition should extend at least to the full depth of the rooting zone.

END OF SECTION

SECTION 09900

PAINTING

PART 1 GENERAL

1.01 SECTION INCLUDES

A. Surface preparation and application of protective coatings.

B. Interior and exterior coating systems.

1.02 REFERENCES

A. ASTM B117-90 - Salt Spray (Fog) Testing.

B. ASTM D2247-87 - Testing Water Resistance of Coatings in 100% Relative Humidity.

C. ASTM D3359-87 - Measuring Adhesion by Tape Test.

D. ASTM D3363-74 - Film Hardness by Pencil Test.

E. ASTM D4060-84 - Abrasion Resistance of Organic Coatings by the Taber Abraser.

F. ASTM D4541-85 - Pull-Off Strength of Coatings Using Portable Adhesion-Testers.

G. ASTM D4585-87 - Testing the Water Resistance of Coatings Using Controlled Condensation.

H. AWWA C210-84 - Liquid Epoxy Coating System for the Interior and Exterior of Steel Water Pipelines.

I. AWWA D102-78 - Painting Steel Water-Storage Tanks.

J. Steel Structures Painting Council (SSPC) Specifications.

1. SP-1 Solvent Cleaning: Remove all grease,oil, salt, acid, alkali, dirt, dust, wax, fat, foreign matter and contaminates, etc. by one of the following methods: steam cleaning, alkaline cleaning, or volatile solvent cleaning.

2. SP-2 Hand Tool Cleaning: Removal of loose rust, loose mill scale and loose paint to a clean sound substrate by hand chipping, scraping, sanding and wire brushing.

3. SP-3 Power Tool Cleaning: Removal of loose mill scale and loose paint to a clean sound substrate by power tool chipping, descaling, sanding, wire brushing and grinding.

4. SP-5 White Metal Blast Cleaning: Complete removal of all mill scale, rust, rust scale, previous coating, etc., leaving the surface a uniform gray-white color.

5. SP-6 Commercial Blast Cleaning: Complete removal of all dirt, rust scale, mill scale, foreign matter and previous coating, etc., leaving only shadows and/or streaks caused by rust stain and mill scale oxides. At least 66% of each square inch of surface area is to be free of all visible residues, except slight discoloration.

6. SP-7 Brush-Off Blast Cleaning: Removal of rust scale, loose mill scale, loose rust and loose coatings, leaving tightly-bonded mill scale, rust and previous coatings. On concrete surfaces, brush-off blast clean to remove all laitance, form oils and solid contaminates. Blasting should be performed sufficiently close to the surface so as to open up surface voids, bugholes, air pockets and other subsurface irregularities, but so as not to expose underlying aggregate.

7. SP-8 Shop Pickled: Complete removal of rust and mill scale by acid pickling, duplex pickling or electrolytic pickling (may reduce the resistance of the surface to corrosion, if not to be primed immediately).

8. SP-10 Near-White Metal Blast Cleaning: Removal of all rust scale, mill scale, previous coating, etc., leaving only light stains from rust, mill scale and small specks of previous coating. At least 95% of each square inch of surface area is to be free of all visible residues and the remainder limited to slight discoloration.

9. VIS-1 Pictorial Surface Preparation Standards for Painting Steel Surfaces

1.03 ABBREVIATIONS

A. ASTM - American Society of Testing Materials

B. AWWA - American Water Works Association

C. DFT - Dry film thickness.

D. Exterior - Outside, exposed to weather.

E. Interior Dry - Inside, concealed or protected from weather.

F. Interior Wet - Inside, subject to immersion service.

G. NACE - National Association of Corrosion Engineers

H. SSPC - Steel Structures Painting Council

1.04 SUBMITTALS

A. Product data sheets and application instructions.

B. Color samples for selection by the Owner.

C. For each coating application, submit an affidavit from the manufacturer stating that the paint selected is recommended for its intended use.

D. When removal of lead containing paint is part of the Work, submit qualifications such as a copy of a Certification of Training, demonstrating that the person supervising the Work has been trained in removing lead containing paint. In addition, submit a plan for the methods to be employed for surface preparation, containment and ventilation, and collection of debris.

1.05 QUALITY ASSURANCE

A. All Work to be done by skilled and experienced craftsmen.

B. When removal of lead containing paint is part of the Work, the person supervising the Work must be trained in lead paint removal by a nationally recognized training organization. A minimum of 16 hours classroom training is required.

C. The following instruments must be available on the job site for Engineer's use, during all painting activities:

1. Moisture meter.
2. 'Tape' type mill profile micrometer.
3. 'Nordson-Mikrotest' dry film gauge.
4. Tooke - gauge.
5. Sponge type holiday detector.

D. Primers and other undercoat paint must be produced by same manufacturer as finish coats.

E. Use only thinners approved by the paint manufacturer, and use only within recommended limits.

1.06 DELIVERY, STORAGE, AND HANDLING

A. Deliver products to site in sealed and labeled containers.

B. Container labeling to include manufacturer's name, type of paint, brand name, brand code, batch number, date of manufacturer, shelf life, coverage, surface preparation, drying time, cleanup, color designation, and instructions for mixing and reducing.

C. Store painting materials in a clean, dry, well ventilated place, protected from sparks, flame, direct rays of the sun or from excessive heat.

1.07 REGULATORY REQUIREMENTS

A. All coatings used for potable water service must be approved and certified for use by the National Sanitation Foundation (NSF) Standard 61 and conform to AWWA D-102 and AWWA C-210.

B. All coatings must meet the requirements for volatile organic compounds (VOC) of not more than 3.5 lbs/gallon after thinning.

C. Contain, handle, and dispose of all hazardous materials, including but not limited to lead containing paint, resulting from surface preparation and painting, in accordance with all applicable local, state and federal requirements.

1.08 ENVIRONMENTAL REQUIREMENTS

A. Apply paint only on thoroughly dry surfaces and during periods of favorable weather, unless otherwise allowed by the paint manufacturer. Except as provided below, painting is not permitted when the atmospheric temperature is below 50° F, or when freshly painted surfaces may be damaged by rain, fog, dust, or condensation, and/or when it can be anticipated that these conditions will prevail during the drying period.

B. Do not apply coatings unless the surface temperature is a minimum of 5° above the dew point; temperature must be maintained during curing.

C. Dew Point Calculation Chart

Ambient Air Temperature - Fahrenheit

Relative Humidity	20	30	40	50	60	70	80	90	100	110	120
90%	18	28	37	47	57	67	77	87	97	107	117
85%	17	26	36	45	55	65	76	84	95	104	113
80%	16	25	34	44	54	63	73	82	93	102	110
75%	15	24	33	42	52	62	71	80	91	100	108
70%	13	22	31	40	50	60	68	78	88	96	105
65%	12	20	29	38	47	57	66	76	85	93	103
60%	11	29	27	36	45	55	64	73	83	92	101
55%	9	17	25	34	43	53	61	70	80	89	98
50%	6	15	23	31	40	50	59	67	77	86	94

45%	4	13	21	29	37	47	56	64	73	82	91
40%	1	11	18	26	35	43	52	61	69	78	87
35%	-2	8	16	23	31	40	48	57	65	74	83
30%	-6	4	13	20	28	36	44	52	61	69	77

SURFACE TEMPERATURE AT WHICH CONDENSATION OCCURS

D. Suitable enclosures to permit painting during inclement weather may be used if provisions are made to control atmospheric conditions artificially inside the enclosure, within limits suitable for painting throughout the painting operations.

1.09 EXISTING CONDITIONS

A. When unable to inspect the interior surfaces of existing tanks during bidding, assume 25 percent of the area is pitted as defined by the Steel Structures Painting Council.

1.10 EXTRA MATERIALS

A. Provide a one gallon container of each color and surface texture to Owner.

B. Label each container with color, texture, location used, in addition to the manufacturer's label.

PART 2 PRODUCTS

2.01 MANUFACTURERS

A. All materials specified herein are manufactured by the Tnemec Company, Inc., North Kansas City, Missouri, unless noted otherwise. These products are specified to establish standards of quality and are approved for use on this Project.

B. Equivalent materials of other manufacturers may be substituted on approval of the Engineer. Requests for substitution must include manufacturer's literature for each product giving the name, generic type, descriptive information and evidence of satisfactory past performance and an independent laboratory certification that their product meets the performance criteria of the specified materials.

C. Performance Criteria

1. Abrasion - ASTM D4060, CS-17 Wheel, 1,000 grams load.

2. Adhesion - ASTM D3359, Method B or ASTM D4541.

3. Exterior Exposure - Exposed at 45 degrees facing the ocean (South Florida Marine Exposure).

4. Hardness - ASTM D3363.

5. Humidity - ASTM D2247 or ASTM D4585.

6. Salt Spray (Fog) - ASTM B117.

D. Substitutions which decrease the film thickness, the number of coats applied, change the generic type of coating, or fail to meet the performance criteria of the specified materials will not be approved. Primer and finish coats on all surfaces must be furnished by the same manufacturer.

2.02 MATERIALS

A. Coatings: Ready mixed, except field catalyzed coatings. Process pigments to a soft paste consistency, capable of being readily and uniformly dispersed to a homogeneous coating. Good flow and brushing properties; capable of drying or curing free of streaks or sags.

B. Accessory Materials: Linseed oil, shellac, turpentine, paint thinners and other materials not specifically indicated but required to achieve the finishes specified. Of commercial quality.

C. Cement - Base Patching: Thorite by Thoro System Products of Miami, Florida.

D. Colors: When not specified, as selected by the Owner.

2.03 EQUIPMENT

A. Use effective oil/water separators on all compressed air lines serving spray painting and sandblasting operations to remove oil or moisture from the air before it is used. Place separators as far as practicable from the compressor.

B. All equipment for application of the paint and the completion of the Work must be in first-class condition and comply with recommendations of the paint manufacturer.

PART 3 EXECUTION

3.01 INSPECTION

A. Applicator must examine areas and conditions under which painting Work is to be completed and notify Engineer in writing of conditions detrimental to proper and timely completion of Work.

B. Inspect the substrate and report any unsatisfactory conditions. Contractor is not responsible for latent defects in the substrate which can not be detected during a reasonable visual inspection. Starting the Work indicates acceptance of the substrate as constructed.

C. All surfaces to be painted are subject to review by the Engineer before application of the prime coat and each succeeding coat. Any defects or deficiencies are to be corrected by the Contractor before application of any subsequent coat.

D. When any appreciable time has elapsed between coats, previously coated areas are to be reviewed by the Engineer. Where surfaces are damaged or contaminated, they are to be cleaned and recoated. Adhere to recoating times of manufacturer's printed instructions.

3.02 SURFACE PREPARATION

A. General: Clean surfaces as specified and in accordance with the manufacturer's recommendation for the coating being used. If surfaces are subject to contamination other than mill scale or normal atmospheric rusting, the surfaces are to be pressure washed, and acid or caustic pH residues neutralized, in addition to the specified surface preparation.

B. Concrete and Masonry: Remove all oil, grease, dirt, laitance and other foreign materials. Blast remove all existing coatings using equipment rated at 3500 psi. Acid etch with a solution of muriatic acid and then rinse with clean water. Verify required acid-alkali balance is achieved. Surface must be dry and free of dust prior to painting. New concrete and masonry must be cured a minimum of 28 days before treating and coating.

   Repair damaged concrete using a cement base patching system. Use in strict accordance with the manufacturer's recommendations.

C. Plaster: Remove dirt, loose mortar, scale, chalk, salt or alkali powder, and other foreign matter. Remove oil and grease with a solution of tri-sodium phosphate; rinse well and allow to dry.

Remove stains caused by weathering of corroding metals with a solution of sodium metasilicate after thoroughly wetting with water. Allow to dry. Fill hairline cracks, small holes, and imperfections with a latex patching plaster.

D. Gypsum Drywall: Latex fill minor defects. Spot prime after repair. Remove dust from surface by wiping with clean rags or other means.

E. Carbon Steel: Remove all oily and greasy residues in accordance with SSPC-SP1. Blast clean using Dupont's 'Starblast' as the blasting media in accordance with SSPC-SP10. 'Starblast' is the only blasting media allowed to be used. Apply primer coat before any rust bloom forms.

F. Galvanized Steel and Other Non-Ferrous Metals: Surface to be clean and dry. Remove oil, grease, and protective mill coatings by solvent cleaning per SSPC-SP1. Remove white rust from galvanized steel by hand or power brushing. Take care not to damage or remove the galvanizing. Remove rust from old galvanized steel by hand or power tool cleaning in accordance with SSPC-SP2 or SSPC-SP3.

G. PVC Pipe: Remove surface contaminants. Roughen surface by sanding to provide adhesion for primer coat.

H. Wood: Remove dust, grit and foreign matter. Seal knots, pitch streaks, and sappy sections. Fill nail holes and cracks. Wood must be clean and dry before application of coating.

I. Fiberglass Reinforced Plastic: Roughen by brush blasting to provide adhesion for primer coat.

3.03 PROTECTION

A. Protect elements surrounding the Work of this Section from damage or disfiguration.

B. Repair damage to other surfaces caused by Work of this Section.

C. Furnish drop cloths, shields, and protective methods to prevent spray or droppings from disfiguring other surfaces.

D. Erect, maintain, and dismantle scaffolding without damage to structures, machinery, equipment or pipe. Use drop cloths to protect buildings and equipment.

E. Construct a temporary shroud or cover to contain and collect all spent abrasives and old paint. Dispose of spent abrasives and old paint in accordance with all local, state and federal requirements.

3.04 APPLICATION

A. Apply products in strict accordance with the coating manufacturer's instructions.

B. Apply coating uniformly at the prescribed thickness. Prevent film defects that would adversely affect the appearance or performance.

C. Apply prime coat immediately following surface preparation and in no case later than the same working day. Apply by brushing, paint mitt and roller, conventional spraying, or airless spraying, using equipment approved by the coatings manufacturer.

D. Recoat as per the manufacturer's instructions. Coating is considered recoatable when an additional coat can be applied without any detrimental film irregularities such as lifting or loss of adhesion.

E. Surfaces that will be inaccessible after assembly are to receive either the full specified paint system or three shop coats of the specified primer before assembly.

F. Brushing or rolling is to be done so that a smooth coat as nearly uniform in thickness as possible is obtained. Smooth the film so as not to leave detrimental marks.

G. When using an air, airless or hot spray, apply paint in a uniform layer, with a 50 percent overlap pattern. Brush out all runs and sags immediately or the paint will have to be removed and the surface resprayed.

H. High build coatings should be applied by a cross-hatch method of spray application to ensure proper film thickness of the coating.

I. Surfaces not accessible to brushes, rollers or sprays may be painted by a dauber, sheepskin, or paint mitt.

J. Sand lightly between each succeeding alkyd enamel or varnish coat.

3.05 FINISHING MECHANICAL AND ELECTRICAL EQUIPMENT

A. Approval from the Owner is required prior to field painting in the vicinity of, or on, energized electrical and rotating equipment, and equipment and/or pipes in service.

B. Exercise extreme care in the painting of operable equipment, such as valves, electric motors, etc., so that the proper functioning of the equipment will not be affected.

C. Degloss factory finish.

D. Do not paint identification markings or code required labels.

E. Match associated piping color with finished paint color. See piping color code.

3.06 CLEANING

A. Contain paint overspray and debris by suitable means, including but not limited to, full shrouding of the area.

B. As Work proceeds, promptly remove paint where spilled, splashed or splattered.

C. During progress of Work maintain premises free of unnecessary accumulation of tools, equipment, surplus materials, and debris.

3.07 COATING SYSTEMS - INTERIOR SURFACES

A. Concrete Floors

1. One coat of Tnemec Series 287 Enviro-Tread (Waterborne Epoxy) applied at 3.0 mils DFT (273 SF/Gal).
2. A second coat of Tnemec Series 287 Enviro-Tread applied at 3.0 mils (273 SF/Gal).
3. Where requested by Owner add or broadcast Series S287-300C (sand) to the 1st coat for a non-slip finish.

B. Masonry Block Walls

1. One coat Tnemec 54-WB surface coat masonry filler. Apply at a minimum rate of 80-100 square feet per gallon to concrete block surfaces only.
2. One coat Series 113 H.B. Tnemec-Tufcoat water-base acrylic epoxy. Apply at a minimum rate of 120-170 square feet per gallon. Two coats will be required if applied by roller.

C. Concrete (including exposed ceilings)

1. Two coats Series 113 H.B. Tnemec-Tufcoat water base acrylic epoxy. Apply at a minimum rate of 120-170 square feet per gallon.

D. Gypsum Drywall

1. One coat Tnemec-cryl Sealer (thinned 10%). Apply at a minimum rate of 400 square feet per gallon.
2. One coat Series 113 H.B. Tneme-Tufcoat water-base acrylic-epoxy. Apply at a minimum rate of 120-170 square feet per gallon. Two coats will be required if applied by roller.

E. Carbon Steel, Ductile Iron, or Cast Iron

1. Prime coat Tnemec Series N69-1211 Epoxoline Primer epoxy-polyamide, 3-5 mils DFT.
2. Finish coat Tnemec Series N69 Hi-Build Epoxoline II epoxy-polyamide, 4-6 mils DFT.

F. Fuel Oil Tanks

1. Prime coat Series 61-5002 Tneme-Liner high solids catalyzed epoxy, 8-12 mils DFT.
2. Finish coat Series 61-5001 Tneme-Liner high solids catalyzed epoxy, 8-12 mils DFT.

G. Galvanized Steel and Other Non-Ferrous Metals

1. One coat Tnemec Series N69 Hi-Build Epoxoline epoxy-polyamide, 4-6 mils DFT.

H. PVC Piping

1. Two coats Tnemec Series N69 Hi-Build Epoxoline epoxy-polyamide. Apply at a minimum rate of 300 square feet per gallon per coat.

I. Shop Finished Electrical and Mechanical Equipment

1. One coat Tnemec Series 27 F/C/ Tu[ppxu (Fast Cire E[pxu), 2-6 mils DFT.
2. One coat Tnemec Series N69 Hi-Build Epoxoline epoxy-polyamide, 4-6 mils DFT.

J. Wood Trim and Doors - Painted

1. Prime coat of Tenemec Series 10-99 W Tnemec primer applied at 2.5 mils DFT (350± SF/Gal)..
2. Two coats of Tnemec Series 23 Enduratone (Semi-Gloss Alkyd Ename) applied at 2.0 mils DFT per coat.

3.08 COATING SYSTEMS - EXTERIOR SURFACES

A. Carbon Steel, Ductile, or Cast Iron

1. Prime coat Tnemec Series 135 (Chembuild Surface Tolerant Epxy), 3-5 mils DFT.
2. Finish coat Tnemec Series 73 Endura-Shield III high build acrylic polyurethane, 2-5 mils DFT.

B. Galvanized Steel and Other Non-Ferrous Metals

1. Prime coat Tnemec Series N69 Hi-Build Epoxoline epoxy-polyamide, 2-3 mils DFT.
2. Finish coat Tnemec Series 73 Endura-Shield III high build acrylic poly- urethane, 2-5 mils DFT.

C. Above Ground Fuel Storage Tanks

1. Shop Primer: One coat Series 90-97 Tneme-Zinc zinc-rich urethane, 2.5-3.5 mils DFT.
2. Field Touch-Up: Series 90-97 Tneme-Zinc, 2.5-3.5 mils DFT.

3. Full first coat Tnemec Series N69 Hi-Build Epoxoline epoxy polyamide, 2-3 mils DFT.
4. Finish coat Tnemec Series 73 Endura-Shield III high-build acrylic polyurethane, 2-5 mils DFT.

D. PVC Piping

1. One coat Tnemec Series N69 Hi-Build Epoxoline epoxy polyamide. Apply at a minimum rate of 300 square feet per gallon.
2. One coat Tnemec Series 73 Endura-Shield III high-build acrylic polyurethane. Apply at a minimum rate of 300 square feet per gallon.

E. Fiberglass Reinforced Plastic

1. One coat Tnemec Series N69 Hi-Build Epoxoline epoxy polyamide. Apply at a minimum rate of 300 square feet per gallon.
2. One coat Tnemec Series 73 Endura-Shield III high-build acrylic polyurethane. Apply at a minimum rate of 300 square feet per gallon.

F. Shop Finished Electrical and Mechanical Equipment

1. Prime coat Tnemec Series 27 F.C. Typoxy (fast cure epoxy), 2-3 mils DFT.
2. Finish coat Tnemec Series 73 Endura-Shield III high-build acrylic polyurethane, 2-5 mils DFT.

G. Masonry Block Walls
1. Block Filler – Tnemec Series 54WB surface coat Masonry Filler applied at 80± SF/Gal.
2. Finish per requirements below.

H. Precast and Cast In Place Concrete
1. Above Grade Coating – Finish per requirements below.
2. Below Grade Coating – Apply one coat Series 46H-413 Hi-Build Theme-Tar (Coal Tar Epoxy), 14.0 to 20.0 mils DFT.

I. Plaster, Above Grade Concrete, and Stucco
1. Prime Coat: Thoro Primer 2K by Thoro System Products of Miami, Florida. Apply at the minimum rate of 200 square feet per gallon.
2. Finish Coats: Two coast Thorosheen by Thoro System Products of Miami, Florida. Apply at the minimum rate of 200 square feet per gallon.
3. See Section 07145 for additional requirements for new or repaired concrete and masonary surfaces.

3.09 PIPING COLOR CODE

Water Lines

Raw	Olive Green
Settled or Clarified	Aqua
Finished or Potable	Dark Blue

Chemical Lines

Alum or Primary Coagulant	Orange
Ammonia	White
Carbon Slurry	Black
Caustic	Yellow with Green Band
Chlorine (Gas and Solution)	Yellow
Fluoride	Light Blue and Red Band
Lime Slurry	Light Green
Ozone	Yellow with Orange Band
Phosphate Compounds	Light Green with Red Band

Polymers or Coagulant Aids	Orange with Green Band
Potassium Permanganate	Violet
Soda Ash	Light Green with Orange Band
Sulfuric Acid	Yellow with Red Band
Sulfur Dioxide	Light Green with Yellow Band

Fuel Oil Lines

Black Oil	Yellow
Diesel	Yellow

Waste Lines

Backwash Waste	Light Brown
Sludge	Dark Brown
Sewer (Sanitary and Other)	Dark Gray

Other

Compressed Air	Dark Green
Gas	Red
Other Lines	Light Gray

3.10 PAINTING SCHEDULE

A. All above ground pipe and other miscellaneous metal.

B. Exemptions: Stainless steel item, chain link fence and other factory finished items (with approval of the Engineer).

END OF SECTION

SECTION 11213

DEEPWELL TURBINE PUMPS

PART 1 GENERAL

1.01 SECTION INCLUDES

A. Turbine pumping units for submersible deepwell applications.

B. Pump column pipe (drop pipe).

1.02 PAYMENT

A. Payment for materials and installation of the Pumping Unit(s) and the services of a Manufacturer's Field Representative shall be included in the Contract Lump Sum Price for turbine well pump, column pipe, etc., as detailed on the Bid Form.

1.03 RELATED SECTIONS

A. Section 02700 Series - Water Supply Well Construction

1.04 REFERENCES

A. ANSI/AWWA E101-77: Vertical Turbine Pumps

1.05 DESIGN REQUIREMENTS

A. Minimum Capacity at design head (gpm) - 800 gpm

B. Datum Elevation to be determined in the field.

C. Pumping level below Datum at design capacity – 80 feet (Assumed)

D. Total head above Datum (static plus system friction) at design capacity - 40 feet

E. Total pump head at design capacity - 120 feet

F. Operating Range: Minimum Total Pump Head – 60 feet
Maximum Total Pump Head – 140 feet

G. Maximum Size of Electric Motor shall be 30 hp

H. Pump Setting - 103 feet below Datum.

I. Nominal diameter Pump Column – 6 inches

J. Nominal diameter of Well Casing – 12 inches.

K. Static water level below Datum – To be determined during construction

L. Maximum shaft nominal speed to be 3600 rpm

1.06 SUBMITTALS

A. Six (6) copies of the manufacturer's information for the pumping unit including but not limited to certified copies of the pump performance curve indicating pumping head, capacity, efficiency and horsepower.

B. Six (6)) copies of the equipment manufacturer's installation, operating and maintenance manuals for the pumping unit.

C. Pumping unit manufacturer's notarized statement that all equipment furnished complies with these Specifications and the applicable requirements of ANSI/AWWA E101-77.

D. Provide certified pump curves of the factory pump test.

PART 2 PRODUCTS

2.01 ACCEPTABLE MANUFACTURERS

A. Pumping unit and motor to be furnished shall be manufactured by a company which maintains an established warehouse within the State of Florida for replacement parts.

B. Manufacturers of pumping units approved to date of this printing are: Goulds Pumps and J-Line Pump Company

C. Manufacturers of pump motors approved to date, as of this printing are: Franklin Electric

2.02 MATERIALS

A. Materials to be utilized in the various components of the pump shall be as listed in Table 4 of AWWA E101-77 with the following exceptions:

1. Suction interconnector bearings, and cable seal glands shall be bronze.
2. The impeller Collet, strainer, and cable clamps shall be 316 stainless steel.
3. Surface plate (sealed) shall be steel.
4. Surface plate gasket shall be neoprene.
5. Terminal box shall be stainless steel.
6. Impellers and bowl assembly shall be nickel-aluminum-bronze.

2.03 EQUIPMENT

A. The pump furnished shall be a submersible vertical pumping unit consisting of a pump bowl assembly with enclosed type impellers, column assembly, 316 stainless steel strainer, surface plate, discharge elbow, terminal box, submersible motor and cable.

B. The submersible electric motor shall be 3-phase, 240 volts, 60 cycle and shall be as specified in Section B4 of AWWA E101-77. The motor shall be of proper size to drive the pump continuously over the specified operating range without the load exceeding the motor rating. Provide Subtrol-Plus monitoring unit from Franklin Electric.

C. Motor case shall be 316 stainless steel.

2.04 PUMP COLUMN PIPE

A. Materials: pipe and couplings shall be made from unplasticized PVC compounds having a minimum cell classification of 12454-B, as defined in ASTM D1784. The compound shall qualify for a Hydrostatic Design Basis (HDB) of 4000 psi for water at 73.4°, in accordance with the requirements of ASTM D2837. White pipe shall be supplied, unless otherwise approved by the Engineer.

B. Approvals: Products shall be evaluated, tested, and certified for conformance with NSF61, or the health effects portion of NSF14, by an acceptable certifying organization.

C. Physical Requirements: Standard pipe laying length shall be 20'. Nominal drop pipe diameter shall be as specified on the Drawings.

D. All pipe supplied as part of this specification shall meet the performance requirements of ASTM D1785 for Schedule 80 pipe.

E. Pipe shall be joined using a spline lock joint. High-strength, acid-resistant, flexible thermoplastic splines shall be inserted into mating precision-machined grooves to provide full 360° restraint with evenly distributed loading. No external pipe-to-pipe restraining devices that clamp onto or otherwise damage the pipe surface as a result of point-loading shall be permitted. The joining system shall incorporate elastomeric sealing gaskets that are designed to provide a watertight seal. Pipe with threaded joints shall not be accepted.

F. The Drop Pipe shall be joined to pumps or other components using a 316 Stainless Steel Drop Pipe Adapter provided by the Drop Pipe manufacturer. Adaptors shall use the same spline lock joint as used on the drop pipe.

G. The Drop Pipe shall be legibly and permanently marked with the following information:

- Manufacturer and Trade Name
- Nominal Size & SCH Rating
- Manufacturing Data Code
- (NSF-61) or (NSF14)

H. All Drop Pipe and couplings shall be homogeneous throughout and free from visible cracks, holes, foreign inclusions, blisters and dents, interior roughness, and other injurious defects that may affect wall integrity. The pipe and couplings shall be uniform in color, opacity, density and other physical characteristics.

I. The Drop Pipe Manufacturer shall be Certa-Lok PVC Drop Pipe by CertainTeed Corporation, Valley Forge, PA 19482 or approved equal.

PART 3 EXECUTION

3.01 INSTALLATION

A. Installation shall comply with the Contract Drawings and Specifications.

B. Assembly of pumping unit shall conform to the pump manufacturer's recommendations.

3.02 MANUFACTURER'S FIELD REPRESENTATIVE

A. Contractor shall provide the services of the pumping unit manufacturer's authorized field representative to verify proper installation of each unit prior to start-up, and to check the operation of each unit during initial operation.

END OF SECTION

SECTION 13100

INSTRUMENTATION, CONTROLS, AND TELEMETRY

PART 1 - GENERAL

1.01 SCOPE OF WORK

A. The work covered by this section of the specifications consists of furnishing all labor, materials, and equipment, and performing all operations necessary for the installation of the complete instrumentation, control, and telemetry system ready for use as specified and shown on the drawings. Omission of a specific item obviously necessary for the proper function of the equipment shall not relieve the Contractor of the responsibility of furnishing and installing the item as a part of the Contract.

B. The major components of the instrumentation, controls, and telemetry system are as follows:

1. One (1) flow transmitter.

2. One (1) level transmitter.

3. Programming of the central station computer to include all control/status logic, screens, and report generation as required for the new systems.

4. Other hardware as shown or as described in the specifications, or as is necessary for proper operation of the system.

1.02 QUALITY ASSURANCE

A. Codes and Standards: All work shall be performed in accordance with the following:

1. Institute of Electrical and Electronic Engineers (IEEE)

2. Instrument Society of America (ISA)

3. National Electrical Manufacturers Association (NEMA)

4. America National Standards Institute (ANSI)

5. National Electric Code (NFPA70)

6. Underwriter Laboratories (U.L.). The RTU shall meet UL 508 requirements and bear the U.L. label.

B. The instrumentation, controls, and telemetry system is an integrated system which shall be furnished by one (1) Supplier who shall provide all of the equipment, regardless of Manufacturer, and shall be responsible to the Contractor for satisfactory operation of the entire system. The Supplier shall also coordinate the interconnecting control functions of all of the system equipment and shall be responsible for producing the complete instrumentation/control/telemetry system interconnection diagrams, wiring tables, and schematics.

C. The Contractor shall coordinate work of the system Supplier, service personnel during construction, testing, calibration and acceptance of this system. The system Supplier shall provide service personnel as required to assist the Contractor in the location of sleeves, methods of installing conduit and special cable, mounting, piping, and wiring of the system equipment prior to placing it in service. The system Supplier shall also provide personnel as required for calibration, start-up and testing of the system equipment.

C. All instruments, and telemetry system components, regardless of Manufacturer, shall be supplied by C.C. Control Corp. of West Palm Beach, Florida, or approved equal. Alternate Suppliers must meet the following conditions:

1. At least two (2) full-time employees of the Supplier, with five (5) years of acceptable experience in the installation and programming of similar systems permanently located within twenty-five miles of the project site.

2. U.L. certified instrumentation, controls, and telemetry assembly shop.

1.03 SUBMITTALS

A. The following shall be provided for approval:

1. A complete schematic of instrumentation/control/telemetry system wiring and equipment interconnection wiring with a full description of the operation and with each component identified. Final copies of the schematic shall be provided as AutoCAD files on disk.

2. Component data sheets indicating pertinent data identifying each component by item number and nomenclature as indicated in the plans and specifications and on the above mentioned schematic drawings.

3. Control loops as separate drawings shall be provided where needed to clarify the operation and connections of the equipment.

4. A hard copy printout of the programs and ladder logic diagrams if applicable.

5. Proposed computer screens for the central station computer shall be provided for review and comment prior to completion of the programming. Changes shall be made as requested at no additional cost.

B. All literature and drawings being forwarded for approval shall be neatly bound in one volume labeled "Instrumentation/Controls/Telemetry". Sales bulletins and other general publications are not acceptable as material for approval. The intent is to provide the Owner and Engineer with a reusable reference.

C. After the work is complete, the Supplier shall provide six (6) copies of complete operating and maintenance instructions and parts lists. These sets of instructions shall include copies of the original

drawing submitted for approval reflecting all "as-built" modifications. The manual shall also include functional description of the entire system. Special requirements particular to the system shall be clearly defined along with special calibration test procedures. Include all password keys. These manuals shall be in a hard cover 3-ring binder in single volume labeled "Instrumentation/Controls/Telemetry Operating and Maintenance Instructions".

D. The Supplier shall provide a minimum of eight (8) hours of instruction to maintenance personnel in the proper operation, calibration, and training on the use and maintenance of all equipment supplied.

1.04 WARRANTY

A. All equipment furnished, and all work performed under Division 13, shall be guaranteed by the Supplier against defects in workmanship, materials, and proper operation for a minimum period of one (1) year from date of acceptance.

PART 2 - PRODUCTS

2.01 ELECTROMAGNETIC FLOW METER

A. Flow Element
   1. Type:
      a. Pulsed DC electromagnetic induction type and shall provide a signal, which is linear to the liquid flow rate.
   2. Functional/Performance:
      a. Power requirements - Match to converter/transmitter
      b. Accuracy - Plus or minus 0.2 percent of reading, or +/- 1 millimeter per second, whichever is greater, irrespective of flow direction (including converter/ transmitter).
      c. Temperature rating - Suitable for process liquid temperature up to 70 degrees C and an ambient of 65 degrees C.
      d. RFI protection - Provide RFI protection.
      e. Pressure rating - 240 psi if 150 lb flanges are used, 700 psi if 300 lb flanges are used.
      f. Additional - Meter shall be capable of running empty indefinitely without damage to any component.
      g. Additional - Meter shall be able to measure flowrate and flow total in both the forward and reverse directions.
   3. Physical:
      a. Metering Tube: 304 stainless steel unless otherwise indicated.
      b. Flanges: ANSI 150 lb, 304 stainless steel unless otherwise indicated.
      c. Liner - Polyurethane for raw water.
      d. Electrodes - Type 316 stainless steel, bullet nosed or elliptical self-cleaning type.
      e. Housing - Meters shall be designed for continuous submergence in 30-ft of water.
      f. Painting - All external surfaces shall be painted with a chemical and corrosion resistant epoxy finish.

4. Accessories/Options Required:
   a. Factory calibration - All meters shall be factory calibrated. A copy of the report shall be provided.
   b. Grounding - Meter shall be grounded per the manufacturers recommendation. Provide ground ring, ground wires, gaskets, etc, as required or as otherwise noted. All materials shall be suitable for liquid being measured.
5. Manufacturers:
   a. Rosemont 8700 Series, no substitute.

B. Flow Converter/Transmitter
1. Type:
   a. Match to flow element.
2. Functional/Performance:
   a. Power requirements - 120 VAC plus or minus 10 percent.
   b. Accuracy - As defined for flow element.
   c. Temperature - minus 25 to plus 65 degrees C
   d. Output - Isolated 4-20 mA into 0 to 1000 ohms, HART protocol.
3. Physical:
   a. Housing - NEMA 4X wall mount.
4. Accessories/Options Required:
   a. Cable - Provide signal cable between element and signal converter.
   b. Indicator - provide local digital indicator with scale in engineering units which indicates actual flow rate.
   c. Totalizer - Provide a seven digit, resettable or non-resettable totalizer on the face of the enclosure and a scalable pulse output to drive the totalizer. The totalizer multiplier shall be a power of 10.
   d. Zero Return Unit - Provide a zero return unit. The unit shall be powered from the converter/transmitter and may be mounted in a separate NEMA 4X enclosure; the device shall drive the element output to 4 mADC on no flow conditions.
   e. Password Protection - Meter software shall incorporate dual password features to prevent inadvertent program or unit changes.
5. Manufacturer:
   a. Rosemont 8712 Series, no substitute.

2.02 LEVEL TRANSMITTER

A. Type:

1. Submersible
2. Pressure
3. 316SS Housing

B. Functional:

1. Range: 0-100 ft. w.c.
2. Power Supply: 24VDC (from receiver over signal leads)
3. Output: 4-20mA DC
4. Mounting Depth: 100 ft. below wellhead

C. Performance:

1. Accuracy: 0.25 percent of span
2. Stability: 0.1 percent of span per year

D. Installation:

1. Level transmitter shall be Pressure Systems, Inc. Series 700, KPSI, or approved equal.

2. Install the level transmitter in accordance with Manufacturer's instructions.

3. Coordinate with the mechanical contractor for proper mounting of equipment and required fittings.

2.03 INSTRUMENT POWER SUPPLIES

A. Provide separate 0-24VDC power supplies, within the RTU enclosure, where required to power the 4-20mA instrument loops. These shall be isolated with lighting/surge protection as specified herein.

2.04 LIGHTING/SURGE PROTECTION

A. General-Lighting/Surge protection shall be provided to protect the electronic instrumentation system from induced surges propagating along the signal and power supply lines. The protection systems shall be such that the protective level shall not interfere with normal operation, but shall be lower than the instrument surge withstand level, and be maintenance free and self-restoring. Instruments shall be housed in a suitable metallic case, properly grounded. Ground wires for all surge protectors shall be connected to a good earth ground and where practical each ground wire run individually and insulated from each other. These protectors shall be mounted within the instrument enclosure or a separate NEMA 4 junction box coupled to the enclosure.

B. Power-Supply-Protection of all 120 VAC instrument power supply lines shall be provided. Cabinet(s)/panel(s) and groups of field instruments shall be protected by UL-listed isolation transformers and two-stage LTSS gas tube and zener diodes devices. Individual field instruments shall be protected by individual 120VAC two-stage LTSS gas tube and zener diodes devices. Maximum withstand ratings shall be coordinated with the electrical service entrance surge arrestors. Transformers shall be GE, SOLA, or equal. LTSS devices shall be Phoenix Contact, Joslyn, MCG Electronics, or equal.

C. Signal Line-All signal lines when they enter a panel shall be protected through the use of UL-listed two-stage LTSS devices containing gas tube surge arrestors, inductor filters, and transorb diode protectors. Panel protectors shall be track-mounted. Field protectors shall be conduit-mounted. Devices shall be Phoenix Contact, Joslyn, Rosemount, EDCO, Weidmueller, or equal.

PART 3 - EXECUTION

3.01 GENERAL

A. All mounting hardware shall be stainless steel.

B. Instrumentation and accessory equipment shall be installed in accordance with the Manufacturer's instructions. The locations of equipment, transmitters, and devices shown on the Drawings are approximate only. Exact locations shall be as approved by the Engineer during construction. Obtain in the field all information relevant to the placing of instruments and in case of any interference with other work, proceed as directed by the Engineer and furnish all labor and materials necessary to complete the work in an approved manner.

C. Unless specifically shown in the contract Drawings, direct reading or electrical transmitting instrumentation shall not be mounted on process piping. Instrumentation shall be mounted on stainless steel unistrut supports. All instrumentation connections shall be provided with shutoff and drain valves. Diaphragm seals with flushing connections shall be provided.

D. The shield on each process instrumentation cable shall be continuous from source to destination and be grounded as directed by the Manufacturer of the instrumentation equipment but in no case shall more than one ground point be employed for each shield.

E. The system supplier shall complete the installation, the placing and location of system components, their connections to the process equipment panels, cabinets, and devices, subject to the Engineer's approval. He shall be responsible to insure that all field wiring for power and signal circuits are correctly done in accordance with best industry practice and provide for all necessary system grounding to insure a satisfactory functioning installation.

F. Instrumentation shall be energized and started only by the instrumentation supplier's field representative.

G. All instrumentation shall be carefully checked by the supplier's field service personnel for damage and shall be fully calibrated and put into operation. Field service personnel shall check calibration under actual conditions as equipment is put into service, and shall work closely with the Contractor and Owner/Engineer in obtaining desired control.

H. After all adjustments are made, one (1) day shall be set aside to allow the system Supplier to demonstrate proper operation as specified, and to instruct maintenance and operations personnel in the operation, maintenance, and troubleshooting of all equipment supplied under this section.

3.02 CENTRAL STATION COMPUTER PROGRAMMING

A. The following control strategies and parameters described herein are written descriptions of the programming required to implement the operation of the entire system. The programming shall be implemented within the central station computer as required to provide the following control and status/alarm reporting functions:

1. Well No.12:

   a. Pump Start/Stop (DO)

   b. Pump Run (DI)

   c. Pump Fail (DI)

   d. Intrusion Alarm (DI)

   e. Pressure (AI)

   f. Level (AI)

   g. Flow (AI)

   h. Power Failure or RTU on Battery Backup (DI)

B. The Supplier shall test all individual control parameters to prove its integrity and the process control language in which it is implemented. Within the testing process the Supplier shall test all Loop-Specific and Non-Loop-Specific functions including but not limited to the following:

1. Failure Mode and Backup Procedures: power failure, program backup and reload, retentive outputs.

2. Communication with the remote terminal units via telemetry.

3. All remote I/O module functions.

Tests shall be performed locally and at the central station computer.

END OF SECTION

APPENDIX A – FIGURE 1

POTABLE WELL NO. 12 DEEPENING

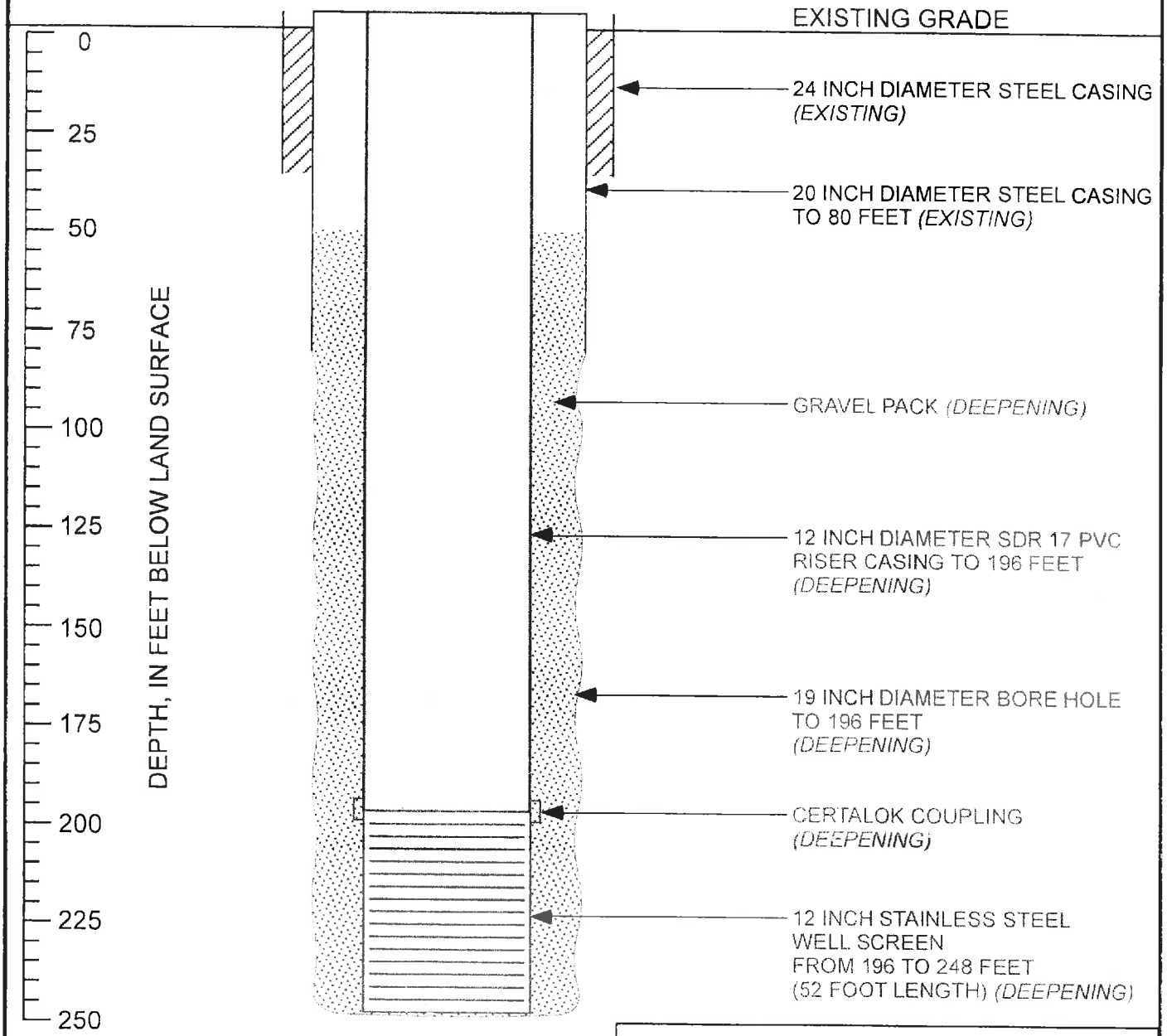

JLA Geosciences, Inc.

LEGEND: CEMENT GROUT; PVC WELL CASING; GRAVEL PACK; WELL SCREEN; STEEL CASING	SCALE: AS SHOWN	DATE: 07/22/2014	
	DRAWN BY: RKS	DWG #:	
PROJECT SITE: CITY OF LAKE WORTH		PROJECT NO: 14-017	
FIGURE TITLE: POTABLE WELL NO. 12 DEEPENING WELL CONSTRUCTION DETAILS		FIGURE NO: 1	

ACORD®

CERTIFICATE OF LIABILITY INSURANCE

DATE (MM/DD/YYYY): 1/6/2015

THIS CERTIFICATE IS ISSUED AS A MATTER OF INFORMATION ONLY AND CONFERS NO RIGHTS UPON THE CERTIFICATE HOLDER. THIS CERTIFICATE DOES NOT AFFIRMATIVELY OR NEGATIVELY AMEND, EXTEND OR ALTER THE COVERAGE AFFORDED BY THE POLICIES BELOW. THIS CERTIFICATE OF INSURANCE DOES NOT CONSTITUTE A CONTRACT BETWEEN THE ISSUING INSURER(S), AUTHORIZED REPRESENTATIVE OR PRODUCER, AND THE CERTIFICATE HOLDER.

IMPORTANT: If the certificate holder is an ADDITIONAL INSURED, the policy(ies) must be endorsed. If SUBROGATION IS WAIVED, subject to the terms and conditions of the policy, certain policies may require an endorsement. A statement on this certificate does not confer rights to the certificate holder in lieu of such endorsement(s).

PRODUCER

Weekes & Callaway, Inc.
3945 West Atlantic Avenue
Delray Beach, FL 33445-3902

CONTACT NAME: Jill Sayer
PHONE (A/C, No, Ext): (561) 278-0448 FAX (A/C, No): (561) 278-2391
E-MAIL ADDRESS: jsayer@weekescallaway.com

INSURED

All Webb's Enterprises, Inc.
309 Commerce Way
Jupiter, FL 33458

INSURER(S) AFFORDING COVERAGE	NAIC #
INSURER A: Crum & Forster Specialty	44520
INSURER B: Travelers Indemnity Co of Amer	25666
INSURER C: Phoenix Insurance Co	25623
INSURER D:	
INSURER E:	
INSURER F:	

COVERAGES CERTIFICATE NUMBER: CL1411306067 REVISION NUMBER:

THIS IS TO CERTIFY THAT THE POLICIES OF INSURANCE LISTED BELOW HAVE BEEN ISSUED TO THE INSURED NAMED ABOVE FOR THE POLICY PERIOD INDICATED. NOTWITHSTANDING ANY REQUIREMENT, TERM OR CONDITION OF ANY CONTRACT OR OTHER DOCUMENT WITH RESPECT TO WHICH THIS CERTIFICATE MAY BE ISSUED OR MAY PERTAIN, THE INSURANCE AFFORDED BY THE POLICIES DESCRIBED HEREIN IS SUBJECT TO ALL THE TERMS, EXCLUSIONS AND CONDITIONS OF SUCH POLICIES. LIMITS SHOWN MAY HAVE BEEN REDUCED BY PAID CLAIMS.

INSR LTR	TYPE OF INSURANCE	ADDL INSR	SUBR WVD	POLICY NUMBER	POLICY EFF (MM/DD/YYYY)	POLICY EXP (MM/DD/YYYY)	LIMITS	
A	GENERAL LIABILITY X COMMERCIAL GENERAL LIABILITY CLAIMS-MADE X OCCUR X Pollution Liability X $5,000 Per Claim Ded. GEN'L AGGREGATE LIMIT APPLIES PER: X POLICY X PRO-JECT LOC	X	X	EPK105954	11/2/2014	11/2/2015	EACH OCCURRENCE DAMAGE TO RENTED PREMISES (Ea occurrence) MED EXP (Any one person) PERSONAL & ADV INJURY GENERAL AGGREGATE PRODUCTS - COMP/OP AGG	$ 1,000,000 $ 50,000 $ 5,000 $ 1,000,000 $ 2,000,000 $ 2,000,000
B	AUTOMOBILE LIABILITY X ANY AUTO ALL OWNED AUTOS SCHEDULED AUTOS X HIRED AUTOS X NON-OWNED AUTOS			DT-810-1735P699-TIA-14	11/2/2014	11/2/2015	COMBINED SINGLE LIMIT (Ea accident) BODILY INJURY (Per person) BODILY INJURY (Per accident) PROPERTY DAMAGE (Per accident) single limit	$ 1,000,000 $ $ $ $
A	UMBRELLA LIAB OCCUR X EXCESS LIAB CLAIMS-MADE DED X RETENTION $ 0			EFX101959	11/2/2014	11/2/2015	EACH OCCURRENCE AGGREGATE	$ 2,000,000 $ 2,000,000 $
	WORKERS COMPENSATION AND EMPLOYERS' LIABILITY ANY PROPRIETOR/PARTNER/EXECUTIVE OFFICER/MEMBER EXCLUDED? Y/N (Mandatory in NH) If yes, describe under DESCRIPTION OF OPERATIONS below	N/A					WC STATU-TORY LIMITS OTH-ER E.L. EACH ACCIDENT E.L. DISEASE - EA EMPLOYEE E.L. DISEASE - POLICY LIMIT	$ $ $
C	Installation Floater			QT-660-1984P108-PHX-13=4	11/2/2014	11/2/2015	$500,000 Installation Floater $1,000 Deductible	

DESCRIPTION OF OPERATIONS / LOCATIONS / VEHICLES (Attach ACORD 101, Additional Remarks Schedule, if more space is required)

RE; Project: Potable Well No. 12 Reconstruction Lake Worth Solicitation No. IFB-15-101
City of Lake Worth is named as an Additional Insured with respects to General Liability when required by written contract with the Named Insured per policy terms and conditions. Florida statute requires 10 day notice of cancellation for non-payment of premium and 45 day notice for non-renewal.

CERTIFICATE HOLDER

City of Lake Worth
7 North Dixie Highway
Lake Worth, FL 33460

CANCELLATION

SHOULD ANY OF THE ABOVE DESCRIBED POLICIES BE CANCELLED BEFORE THE EXPIRATION DATE THEREOF, NOTICE WILL BE DELIVERED IN ACCORDANCE WITH THE POLICY PROVISIONS.

AUTHORIZED REPRESENTATIVE

Rose McEwen, CIC/JDS Rose Ann McEwen

© 1988-2010 ACORD CORPORATION. All rights reserved.
The ACORD name and logo are registered marks of ACORD
PDF created with pdfFactory Pro trial version www.pdffactory.com

ACORD®

CERTIFICATE OF LIABILITY INSURANCE

DATE (MM/DD/YYYY) 1/7/2015

THIS CERTIFICATE IS ISSUED AS A MATTER OF INFORMATION ONLY AND CONFERS NO RIGHTS UPON THE CERTIFICATE HOLDER. THIS CERTIFICATE DOES NOT AFFIRMATIVELY OR NEGATIVELY AMEND, EXTEND OR ALTER THE COVERAGE AFFORDED BY THE POLICIES BELOW. THIS CERTIFICATE OF INSURANCE DOES NOT CONSTITUTE A CONTRACT BETWEEN THE ISSUING INSURER(S), AUTHORIZED REPRESENTATIVE OR PRODUCER, AND THE CERTIFICATE HOLDER.

IMPORTANT: If the certificate holder is an ADDITIONAL INSURED, the policy(ies) must be endorsed. If SUBROGATION IS WAIVED, subject to the terms and conditions of the policy, certain policies may require an endorsement. A statement on this certificate does not confer rights to the certificate holder in lieu of such endorsement(s).

PRODUCER
Weekes & Callaway, Inc.
3945 West Atlantic Avenue
Delray Beach, FL 33445-3902

CONTACT NAME: Jill Sayer
PHONE (A/C, No, Ext): (561) 278-0448 FAX (A/C, No): (561) 278-2391
E-MAIL ADDRESS: jsayer@weekescallaway.com

INSURER(S) AFFORDING COVERAGE	NAIC #
INSURER A: Crum & Forster Specialty	44520
INSURER B: Travelers Indemnity Co of Amer	25666
INSURER C: Phoenix Insurance Co	25623
INSURER D:	
INSURER E:	
INSURER F:	

INSURED
All Webb's Enterprises, Inc.
309 Commerce Way
Jupiter, FL 33458

COVERAGES CERTIFICATE NUMBER: CL1411306067 REVISION NUMBER:

THIS IS TO CERTIFY THAT THE POLICIES OF INSURANCE LISTED BELOW HAVE BEEN ISSUED TO THE INSURED NAMED ABOVE FOR THE POLICY PERIOD INDICATED. NOTWITHSTANDING ANY REQUIREMENT, TERM OR CONDITION OF ANY CONTRACT OR OTHER DOCUMENT WITH RESPECT TO WHICH THIS CERTIFICATE MAY BE ISSUED OR MAY PERTAIN, THE INSURANCE AFFORDED BY THE POLICIES DESCRIBED HEREIN IS SUBJECT TO ALL THE TERMS, EXCLUSIONS AND CONDITIONS OF SUCH POLICIES. LIMITS SHOWN MAY HAVE BEEN REDUCED BY PAID CLAIMS.

INSR LTR	TYPE OF INSURANCE	ADDL INSR	SUBR WVD	POLICY NUMBER	POLICY EFF (MM/DD/YYYY)	POLICY EXP (MM/DD/YYYY)	LIMITS	
A	GENERAL LIABILITY X COMMERCIAL GENERAL LIABILITY CLAIMS-MADE X OCCUR X Pollution Liability X $5,000 Per Claim Ded. GEN'L AGGREGATE LIMIT APPLIES PER: X POLICY X PRO-JECT LOC	X	X	EPK105954	11/2/2014	11/2/2015	EACH OCCURRENCE DAMAGE TO RENTED PREMISES (Ea occurrence) MED EXP (Any one person) PERSONAL & ADV INJURY GENERAL AGGREGATE PRODUCTS - COMP/OP AGG	$ 1,000,000 $ 50,000 $ 5,000 $ 1,000,000 $ 2,000,000 $ 2,000,000 $
B	AUTOMOBILE LIABILITY X ANY AUTO ALL OWNED AUTOS X HIRED AUTOS SCHEDULED AUTOS X NON-OWNED AUTOS			DT-810-1735P699-TIA-14	11/2/2014	11/2/2015	COMBINED SINGLE LIMIT (Ea accident) BODILY INJURY (Per person) BODILY INJURY (Per accident) PROPERTY DAMAGE (Per accident) single limit	$ 1,000,000 $ $ $ $
A	UMBRELLA LIAB OCCUR X EXCESS LIAB CLAIMS-MADE DED X RETENTION $ 0			EFX101959	11/2/2014	11/2/2015	EACH OCCURRENCE AGGREGATE	$ 2,000,000 $ 2,000,000 $
	WORKERS COMPENSATION AND EMPLOYERS' LIABILITY ANY PROPRIETOR/PARTNER/EXECUTIVE OFFICER/MEMBER EXCLUDED? Y/N (Mandatory in NH) If yes, describe under DESCRIPTION OF OPERATIONS below	N/A					WC STATUTORY LIMITS OTHER E.L. EACH ACCIDENT E.L. DISEASE - EA EMPLOYEE E.L. DISEASE - POLICY LIMIT	$ $ $
C	Installation Floater			QT-660-1984P108-PHX-13=4	11/2/2014	11/2/2015	$500,000 Installation Floater $1,000 Deductible	

DESCRIPTION OF OPERATIONS / LOCATIONS / VEHICLES (Attach ACORD 101, Additional Remarks Schedule, if more space is required)
Re; Project: Potable Well No. 12 Reconstruction Lake Worth Solicitation No. IFB-15-101
Mocks, Roos & Associates, Inc. (Engineer) is named as an Additional Insured with respects to General Liability when required by written contract with the Named Insured per policy terms and conditions.
Florida statute requires 10 day notice of cancellation for non-payment of premium and 45 day notice for non-renewal.

CERTIFICATE HOLDER
Mocks, Roos & Associates, Inc.
5720 Corporate Way
West Palm Beach, FL 33407

CANCELLATION
SHOULD ANY OF THE ABOVE DESCRIBED POLICIES BE CANCELLED BEFORE THE EXPIRATION DATE THEREOF, NOTICE WILL BE DELIVERED IN ACCORDANCE WITH THE POLICY PROVISIONS.

AUTHORIZED REPRESENTATIVE
Rose McEwen, CIC/JDS Rose Ann McEwen

© 1988-2010 ACORD CORPORATION. All rights reserved.
The ACORD name and logo are registered marks of ACORD
PDF created with pdfFactory Pro trial version www.pdffactory.com

ACORD®

CERTIFICATE OF LIABILITY INSURANCE

DATE (MM/DD/YYYY) 01/06/2015

THIS CERTIFICATE IS ISSUED AS A MATTER OF INFORMATION ONLY AND CONFERS NO RIGHTS UPON THE CERTIFICATE HOLDER. THIS CERTIFICATE DOES NOT AFFIRMATIVELY OR NEGATIVELY AMEND, EXTEND OR ALTER THE COVERAGE AFFORDED BY THE POLICIES BELOW. THIS CERTIFICATE OF INSURANCE DOES NOT CONSTITUTE A CONTRACT BETWEEN THE ISSUING INSURER(S), AUTHORIZED REPRESENTATIVE OR PRODUCER, AND THE CERTIFICATE HOLDER.

IMPORTANT: If the certificate holder is an ADDITIONAL INSURED, the policy(ies) must be endorsed. If SUBROGATION IS WAIVED, subject to the terms and conditions of the policy, certain policies may require an endorsement. A statement on this certificate does not confer rights to the certificate holder in lieu of such endorsement(s).

PRODUCER

IRON FIDELITY INSURANCE SERVICES, LLC. 4041
2004 LA PRADA PARKWAY
MESQUITE, TX. 75150

CONTACT NAME: Payroll Management, Inc.
PHONE (A/C, No, Ext): 850-243-5604 FAX (A/C, No): 850-243-5640
E-MAIL ADDRESS: payroll@pmipeo.com

INSURER(S) AFFORDING COVERAGE	NAIC #
INSURER A: XL SPECIALTY INSURANCE COMPANY	37885
INSURER B:	
INSURER C:	
INSURER D:	
INSURER E:	
INSURER F:	

INSURED
Payroll Management, Inc.
FOR: ALL WEBBS ENTERPRISES, INC.
348 Miracle Strip Parkway SW
Suite 39
Fort Walton Beach, FL. 32548

COVERAGES CERTIFICATE NUMBER: REVISION NUMBER:

THIS IS TO CERTIFY THAT THE POLICIES OF INSURANCE LISTED BELOW HAVE BEEN ISSUED TO THE INSURED NAMED ABOVE FOR THE POLICY PERIOD INDICATED. NOTWITHSTANDING ANY REQUIREMENT, TERM OR CONDITION OF ANY CONTRACT OR OTHER DOCUMENT WITH RESPECT TO WHICH THIS CERTIFICATE MAY BE ISSUED OR MAY PERTAIN, THE INSURANCE AFFORDED BY THE POLICIES DESCRIBED HEREIN IS SUBJECT TO ALL THE TERMS, EXCLUSIONS AND CONDITIONS OF SUCH POLICIES. LIMITS SHOWN MAY HAVE BEEN REDUCED BY PAID CLAIMS.

INSR LTR	TYPE OF INSURANCE	ADDL INSR	SUBR WVD	POLICY NUMBER	POLICY EFF (MM/DD/YYYY)	POLICY EXP (MM/DD/YYYY)	LIMITS	
	GENERAL LIABILITY							
	COMMERCIAL GENERAL LIABILITY						EACH OCCURRENCE	$
	CLAIMS-MADE OCCUR						DAMAGE TO RENTED PREMISES (Ea occurrence)	$
							MED EXP (Any one person)	$
							PERSONAL & ADV INJURY	$
	GEN'L AGGREGATE LIMIT APPLIES PER:						GENERAL AGGREGATE	$
	POLICY PRO-JECT LOC						PRODUCTS - COMP/OP AGG	$
								$
	AUTOMOBILE LIABILITY						COMBINED SINGLE LIMIT (Ea accident)	$
	ANY AUTO						BODILY INJURY (Per person)	$
	ALL OWNED AUTOS / SCHEDULED AUTOS						BODILY INJURY (Per accident)	$
	HIRED AUTOS / NON-OWNED AUTOS						PROPERTY DAMAGE (Per accident)	$
								$
	UMBRELLA LIAB / OCCUR						EACH OCCURRENCE	$
	EXCESS LIAB / CLAIMS-MADE						AGGREGATE	$
	DED RETENTION $							$
A	WORKERS COMPENSATION AND EMPLOYERS' LIABILITY						X WC STATU-TORY LIMITS / OTH-ER	
	ANY PROPRIETOR/PARTNER/EXECUTIVE OFFICER/MEMBER EXCLUDED? Y/N N (Mandatory in NH) If yes, describe under DESCRIPTION OF OPERATIONS below	N/A	X	RWE9435453	05/01/2014	05/01/2015	E.L. EACH ACCIDENT	$ 1,000,000
							E.L. DISEASE - EA EMPLOYEE	$ 1,000,000
							E.L. DISEASE - POLICY LIMIT	$ 1,000,000

DESCRIPTION OF OPERATIONS / LOCATIONS / VEHICLES (Attach ACORD 101, Additional Remarks Schedule, if more space is required)

*COVERAGE ONLY APPLIES TO ACTIVE EMPLOYEE(S) OF PAYROLL MANAGEMENT INCORPORATED, THAT ARE LEASED TO THE FOLLOWING "CLIENT COMPANY" ALL WEBBS ENTERPRISES, INC.
**COVERAGE ONLY APPLIES TO INJURIES INCURRED BY PAYROLL MANAGEMENT INCORPORATED & SUBSIDIARIES ACTIVE EMPLOYEE(S) WHILE WORKING IN THE STATE OF FLORIDA.
***COVERAGE DOES NOT APPLY TO STATUTORY EMPLOYEE(S) OR INDEPENDENT CONTRACTOR(S) OF THE CLIENT COMPANY OR ANY OTHER ENTITY.
****DOES NOT COVER USL&H.
PROJECT: POTABLE WELL NO. 12 RECONSTRUCTION LAKE WORTH SOLICITATION NO. IFB-15-101

CERTIFICATE HOLDER

The City of Lake Worth, Florida
7 North Dixie Highway
Lake Worth, Florida 33460

CANCELLATION 4041

SHOULD ANY OF THE ABOVE DESCRIBED POLICIES BE CANCELLED BEFORE THE EXPIRATION DATE THEREOF, NOTICE WILL BE DELIVERED IN ACCORDANCE WITH THE POLICY PROVISIONS.

AUTHORIZED REPRESENTATIVE

Adam Goldberg

© 1988-2010 ACORD CORPORATION. All rights reserved.

The ACORD name and logo are registered marks of ACORD

ACORD®

CERTIFICATE OF LIABILITY INSURANCE

DATE (MM/DD/YYYY) 01/08/2015

THIS CERTIFICATE IS ISSUED AS A MATTER OF INFORMATION ONLY AND CONFERS NO RIGHTS UPON THE CERTIFICATE HOLDER. THIS CERTIFICATE DOES NOT AFFIRMATIVELY OR NEGATIVELY AMEND, EXTEND OR ALTER THE COVERAGE AFFORDED BY THE POLICIES BELOW. THIS CERTIFICATE OF INSURANCE DOES NOT CONSTITUTE A CONTRACT BETWEEN THE ISSUING INSURER(S), AUTHORIZED REPRESENTATIVE OR PRODUCER, AND THE CERTIFICATE HOLDER.

IMPORTANT: If the certificate holder is an ADDITIONAL INSURED, the policy(ies) must be endorsed. If SUBROGATION IS WAIVED, subject to the terms and conditions of the policy, certain policies may require an endorsement. A statement on this certificate does not confer rights to the certificate holder in lieu of such endorsement(s).

PRODUCER 4041

IRON FIDELITY INSURANCE SERVICES, LLC.
2004 LA PRADA PARKWAY
MESQUITE, TX. 75150

CONTACT NAME: Payroll Management, Inc.
PHONE (A/C, No, Ext): 850-243-5604 FAX (A/C, No): 850-243-5640
E-MAIL ADDRESS: payroll@pmipeo.com

INSURER(S) AFFORDING COVERAGE	NAIC #
INSURER A : XL SPECIALTY INSURANCE COMPANY	37885
INSURER B :	
INSURER C :	
INSURER D :	
INSURER E :	
INSURER F :	

INSURED
Payroll Management, Inc.
348 Miracle Strip Parkway SW
Suite 39
Fort Walton Beach, FL. 32548
850-243-5604

COVERAGES CERTIFICATE NUMBER: REVISION NUMBER:

THIS IS TO CERTIFY THAT THE POLICIES OF INSURANCE LISTED BELOW HAVE BEEN ISSUED FOR THE POLICY PERIOD INDICATED. NOTWITHSTANDING ANY REQUIREMENT, TERM OR CONDITION OF ANY CONTRACT OR OTHER DOCUMENT WITH RESPECT TO WHICH THIS CERTIFICATE MAY BE ISSUED OR MAY PERTAIN, THE INSURANCE AFFORDED BY THE POLICIES DESCRIBED HEREIN IS SUBJECT TO ALL THE TERMS, EXCLUSIONS AND CONDITIONS OF SUCH POLICIES. LIMITS SHOWN MAY HAVE BEEN REDUCED BY PAID CLAIMS.

INSR LTR	TYPE OF INSURANCE	ADDL INSR	SUBR WVD	POLICY NUMBER	POLICY EFF (MM/DD/YYYY)	POLICY EXP (MM/DD/YYYY)	LIMITS	
	GENERAL LIABILITY						EACH OCCURRENCE	$
	COMMERCIAL GENERAL LIABILITY						DAMAGE TO RENTED PREMISES (Ea occurrence)	$
	CLAIMS-MADE OCCUR						MED EXP (Any one person)	$
							PERSONAL & ADV INJURY	$
							GENERAL AGGREGATE	$
	GEN'L AGGREGATE LIMIT APPLIES PER:						PRODUCTS - COMP/OP AGG	$
	POLICY PRO-JECT LOC							$
	AUTOMOBILE LIABILITY						COMBINED SINGLE LIMIT (Ea accident)	$
	ANY AUTO						BODILY INJURY (Per person)	$
	ALL OWNED AUTOS / SCHEDULED AUTOS						BODILY INJURY (Per accident)	$
	HIRED AUTOS / NON-OWNED AUTOS						PROPERTY DAMAGE (Per accident)	$
								$
	UMBRELLA LIAB / OCCUR						EACH OCCURRENCE	$
	EXCESS LIAB / CLAIMS-MADE						AGGREGATE	$
	DED RETENTION $							$
A	WORKERS COMPENSATION AND EMPLOYERS' LIABILITY ANY PROPRIETOR/PARTNER/EXECUTIVE OFFICER/MEMBER EXCLUDED? Y/N N (Mandatory in NH) If yes, describe under DESCRIPTION OF OPERATIONS below	N/A	X	RWE9435453	05/01/2014	05/01/2015	X WC STATU-TORY LIMITS / OTH-ER	
							E.L. EACH ACCIDENT	$ 1,000,000
							E.L. DISEASE - EA EMPLOYEE	$ 1,000,000
							E.L. DISEASE - POLICY LIMIT	$ 1,000,000

DESCRIPTION OF OPERATIONS / LOCATIONS / VEHICLES (Attach ACORD 101, Additional Remarks Schedule, if more space is required)

*COVERAGE ONLY APPLIES TO ACTIVE EMPLOYEE(S) OF PAYROLL MANAGEMENT INCORPORATED, THAT ARE LEASED TO THE FOLLOWING "ALL WEBBS ENTERPRISES" ,PAYROLL M ANAGEMENT INC..
**COVERAGE ONLY APPLIES TO INJURIES INCURRED BY PAYROLL MANAGEMENT INCORPORATED & SUBSIDIARIES ACTIVE EMPLOYEE(S) WHILE WORKING IN THE STATE OF FLORIDA.
***COVERAGE DOES NOT APPLY TO STATUTORY EMPLOYEE(S) OR INDEPENDENT CONTRACTOR(S) OF THE CLIENT COMPANY OR ANY OTHER ENTITY.
****DOES NOT COVER USL&H.
A LIST OF ACTIVE EMPLOYEE(S) LEASED TO ALL WEBBS ENTERPRISES CAN BE OBTAINED BY EMAIL TO PAYROLL@PMIPEO.COM

CERTIFICATE HOLDER

MOCKS, ROOS & ASSOCIATES, INC.
5720 CORPORATE WAY
WEST PALM BEACH, FL 33407

CANCELLATION 4041

SHOULD ANY OF THE ABOVE DESCRIBED POLICIES BE CANCELLED BEFORE THE EXPIRATION DATE THEREOF, NOTICE WILL BE DELIVERED IN ACCORDANCE WITH THE POLICY PROVISIONS.

AUTHORIZED REPRESENTATIVE

Adam Goldberg

© 1988-2010 ACORD CORPORATION. All rights reserved.

The ACORD name and logo are registered marks of ACORD

MOCK • ROOS
ENGINEERS • SURVEYORS • PLANNERS

January 8, 2015
Revised February 12, 2015

Mr. Larry Johnson, P.E.
Lake Worth Utilities
301 College Street
Lake Worth, FL 33460

Ref. No. B4015.02
Subject: Potable Well No. 12 Reconstruction
Task Order No. 11

Dear Larry:

We are submitting the attached Proposal To Provide *Construction Phase Engineering Services for Potable Well No. 12*. Please review the attached proposal and return one signed copy to our office as our authorization to proceed with the Scope of Services outlined in the proposal.

We will provide the Construction Phase Scope of Services on an hourly basis, plus reimbursable expenses. We anticipate the total fee to provide the Construction Phase Scope of Services will be $39,300. Approximately 50% of this fee is for our hydro-geologic subconsultant.

If you have any questions please contact me at 683-3113, extension 258. Thank you for using Mock•Roos on this project. We look forward to working with you.

Sincerely,

MOCK, ROOS & ASSOCIATES, INC.

John R. Leemon, P.E.
Senior Project Manager

JRL:jeh
Enclosure
Copies: Bookkeeping

Mock, Roos & Associates, Inc.
5720 Corporate Way, West Palm Beach, Florida 33407-2066, (561) 683-3113, fax 478-7248

Proposal To Provide Construction Phase Services for Potable Well No. 12 Reconstruction Task Order No. 11

Services to be provided by: Mock•Roos

Services provided to (City): Lake Worth Utilities

Proposal Date: January 8, 2015
Revised February 5, 2015

Proposal Terms

A. Project Description:

The project includes the reconstruction of Potable Well No. 12 to a deeper depth. Mock•Roos will provide construction phase services as more specifically described under **B. Scope of Services** below.

B. Scope of Services:

1. Construction Phase Services

   a. Provide Construction Phase Engineering Services for the Project, act as the City's engineering representative during construction, and advise the City on construction aspects of the project when necessary.

   b. Coordinate with the City and the selected Contractor to assist in awarding the contract.

   c. Coordinate, schedule and attend a preconstruction meeting with the Contractor, City and Subconsultants, prepare a detailed agenda for the preconstruction meeting, and prepare and distribute meeting minutes.

   d. Review and process Contractor submittals and shop drawings for general conformance with the Contract Documents. Review and processing of "or equal" or "substitution" packages, as may be requested by the Contractor or City, can be performed as Additional Services. These services when requested are usually reimbursed by the Contractor.

   e. Provide part time Project Field Representative services in accordance with the description of duties contained in the Project Manual. Project Field Representative services are budgeted not to exceed 2 hours per day for the active construction period other than the well drilling phase. Our hydro-geologic subconsultant will provide Field Representative services for the well drilling and well development phases.

f. Provide periodic site visits by the Engineer to observe the progress of the Work.

g. Review and process Contractor submitted applications for progress payment. Recommendations to the City regarding payment will be based on estimated quantities and work to date amounts observed for the requested progress payment period.

h. Assist in resolving Contractor's technical questions, if any, during the construction period. Provide interpretations of the Drawings, Technical Specifications, and Contract Documents and issue clarifications as needed.

i. Assist in implementing City requested minor changes to the construction project, generally in the form of Work Directive Changes. These minor changes should not require re-design of project elements. Associated construction cost, if any, will be deducted from a general allowance balance on the Project. Preparing major Change Orders for City requested changes or additions may require Additional Services.

j. Attend periodic construction meetings with the Contractor, City, and Subconsultants, to discuss the progress of the Work, review the Contractor's proposed construction schedules, and discuss other items as may be appropriate.

2. Perform one "Substantial Completion Walkthrough" with the Contractor, City and Subconsultants.

3. Prepare and distribute a punch-list of remaining work items to be completed following the "Substantial Completion Walkthrough".

4. Prepare and assist the City in the execution of a Substantial Completion Certificate as appropriate.

5. Perform one "Final Project Walkthrough" with the Contractor, City and Subconsultants once the punch-list is completed. Prepare a list, if necessary, of any punch-list items found to be inadequately addressed and advise the Contractor of the items that remain to be completed before the Project can be accepted by the City.

6. Review Contractor submitted record drawings for conformance with the requirements of the Contract Documents and incorporate the Contractor's record drawing information into to the electronic drawing files for City use. Provide an electronic copy of the drawing files in AutoCAD "DWG" format and in PDF format.

7. Prepare and assist the City in processing final paperwork for the Project including: a final change order to adjust any quantities or other items in the Project, if necessary; the Contractor's final payment application; and a recommendation for final payment and final acceptance of the Project when appropriate.

8. Provide the services of a hydro-geologic subconsultant to review the drilling, development, and completion aspects of the well construction.

9. Schedule: Construction Phase Services will run concurrent with the initial construction contract timeframe. If contractor schedule is extended for any reason the Engineer's schedule and fee may be adjusted..

C. Additional Services:

1. Any services not included in the Scope of Services will be considered Additional Services.

2. Any design changes, schedule changes, drawing changes, or other project changes requested by Client will be considered Additional Services.

3. Additional Services can be provided upon Mock•Roos receiving signed authorization from Client.

D. Fees and Rates:

1. Mock•Roos will complete the Construction Phase Services on an hourly basis at Mock•Roos' hourly rates, plus reimbursable expenses. The total fee to provide the Construction Phase Scope of Services is anticipated to be $39,300.

2. Mock•Roos will not provide services in excess of the anticipated fee without authorization from City.

3. Mock•Roos can provide Additional Services at the Mock•Roos rates in effect at that time, plus reimbursable expenses or for an agreed upon lump sum fee.

E. Conditions:

1. All terms become valid upon Mock•Roos receiving one complete copy of this proposal within 60 days of its date.

2. This Proposal is based on the Scope of Services being completed on or before December 31, 2015. If not completed by this date for reasons other than those within the control of Mock•Roos, all Mock•Roos may request a change order as provided for in Mock•Roos' contract with the Client (Contract RFQ 12-13-302).

3. This proposal serves as a supplement to the general agreement between Mock•Roos and Client Contract RFQ 12-13-302.

4. In case of discrepancies, the terms of this proposal supersede those of previous agreements.

F. Acceptance and Authorization to Proceed:

1. This proposal is acceptable and Mock•Roos has authorization to proceed with the Scope of Services. This authorization becomes valid upon Mock•Roos receiving one **complete** copy of this form with an original signature below.

IN WITNESS WHEREOF the parties hereto have made and executed this Agreement on the _____ day of _____, 2015.

CITY OF LAKE WORTH, FLORIDA

By: _____
Pam Triolo, Mayor

ATTEST:

_____
Pamela J. Lopez, City Clerk

Approved as to form and legal sufficiency:

By: _____
Christy Goddeau
City Attorney

_____
Date

MOCK, ROOS & ASSOCIATES, INC.

By: _____
Thomas A. Biggs, P.E.
Executive Vice President

2/12/15
Date

STATE OF FLORIDA)
COUNTY OF PALM BEACH)

The foregoing instrument was acknowledged before me this 12 day of February, 2015, by Thomas A. Biggs, P.E., Executive Vice President of Mock, Roos & Associates, Inc., a Florida corporation, on behalf of the corporation, and who is personally known to me or who as produced the following _____ as identification.

Notary Public:
Jane E. Hayes

Print Name: Jane E. Hayes
My commission expires: 8/15/17

JANE E. HAYES
Commission # FF 040421
Expires August 15, 2017
Bonded Thru Troy Fain Insurance 800-385-7019

L:\mk\B4015.02\hr01jlcm-rev.doc

Potable Well No. 12 Reconstruction
for
City of Lake Worth

Estimate of Construction Phase Engineering Fees

TASK	Project Manager	Project Engr.	Field Rep	CADD Tech	Admin. Assist.	TOTAL
I. Pre-Construction Activities						
Pre-construction Meeting & Minutes	1	3	1		2	683
Processing Shop Drawings	2	8			2	1,298
Coord. w/Contractor & Client	2	2				520
Subtotal	5	13	1	0	4	2,501
II. Construction Activities						
Construction Services Admin.	4	8			2	1,598
Field Observation & Supervision	2	4	60		4	6,076
Review Payment Applications	4	6			4	1,496
Resolve Field & Technical Quest.	2	4			2	858
Assistance with Minor Changes	2	4			2	858
Construction Progress Meetings	4	6				1,260
Substantial Completion Walk-Through & Follow-up Coord.	2		2		2	588
Final Completion Observation	2		2		1	529
Coord. w/Contractor & Client	2	2			1	579
Subtotal	24	34	64	0	18	13,842
III. Post-Construction Activities						
Resolve Punch List Items	1	2	4		1	769
Process Final Paperwork	2	4			2	858
Update AutoCAD Record Drawings		2		6		730
Coordination w/Contractor & Client	2	2			1	579
Subtotal	5	10	4	6	4	2,936
Total Hours	34	57	69	6	26	19,279
Hourly Rate	150	110	85	85	59	
Total By Category	5,100	6,270	5,865	510	1,534	
Total Hourly Cost						19,279
Hydrogeologic Subconsultant						16,045
Electrical Subconsultant						3,500
Reimbursable Expenses						476
TOTAL BUDGET						**$39,300**

CITY OF LAKE WORTH

7 North Dixie Highway · Lake Worth, Florida 33460 · Phone: 561-586-1600· Fax: 561-586-1750

AGENDA DATE: February 17, 2015, Regular Meeting **DEPARTMENT:** Water Utilities, Public Services

---

EXECUTIVE BRIEF

TITLE:

Ordinance No. 2015-03 - Second Reading and Public Hearing - amend Chapter 18 to address all City utilities with specific provisions for water, sewer and stormwater

SUMMARY:

This ordinance will consolidate the city utility systems into Chapter 18 (except solid waste) and provide provisions for water, sewer and stormwater. Many of the provisions currently exist in the city's code, city resolutions or in policies/practice. This ordinance also authorizes the implementation of Policies and Procedures Manuals for Water Utilities and Stormwater.

BACKGROUND AND JUSTIFICATION:

The city currently has ordinances, resolutions and policies/practices for the operations, management and maintenance of its water, sewer, electric and stormwater utilities. City staff desires to consolidate the primary legal requirements of these utilities in Chapter 18 and to create and adopt policies and procedural manuals (PPMs) to supplement the legal requirements and set forth particular specifications, procedures and policies. This ordinance specifically addresses the water, sewer and stormwater utilities. Solid Waste will remain in Chapter 12 (Health and Sanitation) and the electric utility system will updated in Chapter 18 in the near future. The PPMs for water, sewer and stormwater will be presented to the City Commission on second reading of this ordinance (or shortly thereafter) for adoption by the Commission. Once adopted, the PPMs may be modified by the applicable utility director with the approval of the City Manager. All fees and charges are removed from Chapter 18 and will be set forth in the city-wide fee resolution (or may be separated into their own resolution).

MOTION:

I move to approve/not approve Ordinance No. 2015-03 on second reading.

ATTACHMENT(S):

Fiscal Impact Analysis – Not applicable

ORDINANCE NO. 2015-03 OF THE CITY OF LAKE WORTH, FLORIDA, DELETING CHAPTER 18, "WATER AND SEWERS", AND ADOPTING A NEW CHAPTER 18, "UTILITIES" TO SET FORTH THE ADMINISTRATIVE AND REGULATORY REQUIREMENTS OF THE WATER, SEWER, STORMWATER AND ELECTRIC UTILITY SYSTEMS; AMENDING CHAPTER 2, "ADMINISTRATION", ARTICLE 1, "IN GENERAL", SECTION 2-10, "LIEN OF UTILITY SERVICE CHARGES"; DELETING ARTICLE I, "USE OF STORMWATER SYSTEM" FROM CHAPTER 12, "HEALTH AND SANITATION"; PROVIDING FOR OTHER PURPOSES, SEVERABILITY, CONFLICTS, CODIFICATION AND AN EFFECTIVE DATE

WHEREAS, the City of Lake Worth, Florida (the "city") is a duly constituted municipality having such power and authority conferred upon it by the Florida Constitution and Chapter 166, Florida Statutes; and

WHEREAS, the city's code of ordinances contains some of the city's administrative and regulatory requirements for its water, sewer, stormwater and electric utility systems; and

WHEREAS, the city has also adopted resolutions containing other administrative and regulatory requirements for its water, sewer and electric systems; and

WHEREAS, the city desires to consolidate the administrative and regulatory requirements regarding the water, sewer, stormwater and electric systems in chapter 18 of the city's code; and

WHEREAS, this ordinance specifically sets forth the administrative and regulatory requirements regarding the water, sewer and stormwater systems with said requirements for the electric system to be addressed at a future date; and

WHEREAS, the city also desires to adopt a Policy and Procedures Manual to supplement and be a legally binding part of this ordinance; and

WHEREAS, the City Commission has determined that it is in the best interest of the public health, safety and general welfare of the City to adopt this ordinance.

NOW THEREFORE, BE IT ORDAINED BY THE CITY COMMISSION OF THE CITY OF LAKE WORTH, FLORIDA, that:

Section 1. The foregoing "WHEREAS" clauses are true and correct and are hereby ratified and confirmed by the City Commission.

Section 2. Chapter 18, "Water and Sewers", is deleted, and new Chapter 18, "Utilities" is adopted to read as follows:

Chapter 18 – UTILITIES

ARTICLE I. GENERAL

Sec. 18-1. Utility systems separated

(a) The city's electric system, water system and sewer system are hereby separated into the Electric Utilities Department, which includes all aspects of the electric system, and the Water Utilities Department, which includes the water system, local sewer system and regional sewer system.

(b) The stormwater system and solid waste system shall be separate utilities under the management of the Public Services Department.

(c) All funding, data and associated records shall be kept separately for the operation and management of the systems. The various systems will continue to cooperate and share services for the benefit of the city.

(d) Rates, fees, and charges applicable to the city's utilities shall be adopted by resolution unless otherwise set forth in the code.

Sec. 18-2. Lien of utility service charges.

(a) The city will have liens on all lands or premises served by its water system, sewer system, stormwater system, solid waste system and electric system for all service charges for such services and facilities until paid, which liens shall be prior to all other liens on such lands or premises except the lien of state, county and municipal taxes and shall be on a parity with the lien of such state, county and municipal taxes. Such liens, when delinquent for more than thirty (30) days, may be foreclosed by the city in the manner provided by the Laws of Florida for the foreclosure of mortgages on real property.

(b) A lien established by this section shall be released by the Mayor upon the payment of the service charges and the recommendation of the applicable department director or his or her designee. The release of lien shall be in written form and executed by the Mayor or designee and City Clerk.

(c) Notwithstanding the provisions of subsection (a) above, the city shall not have a lien on rental properties or rental units when prohibited by section 180.135, Florida Statutes.

ARTICLE II. WATER UTILITY

Sec. 18-3. Definitions.

The following words, terms and phrases, when used in this chapter, shall have the meanings ascribed to them in this section, except where the context clearly indicates a different meaning:

Consumer means the property owner, tenant, user and/or any other consumer of any and all services provided under this chapter.

Sewer System means all piping and works operated by the city for the collection and conveying of sanitary sewage from the pipe connection at the property line fronting the individual properties to the point of final disposition thereof, and all equipment and facilities used in connection therewith, including all pipelines, manholes, trunk lines, pumping equipment, lift stations, purification and treatment facilities and works whatsoever, real or personal, now or hereafter owned or used by the city in the operation of the sewer system which is inclusive of the wastewater system and the local and regional sewer system.

Water System means all wells, pumping stations, purification plants and other sources of supply of water and all pipes, mains and other parts of the facilities for the transmission and distribution of water, and all equipment and property used in connection therewith and all other facilities of any nature or description, real or personal, now or hereafter owned or used by the city in the supply and distribution of water by its municipally owned water system.

Water Utility means both the water and sewer system.

Sec. 18-4. Service of notice.

(a) Any notices, as prescribed herein, shall be deemed to have been properly served if left upon the premises of the owner or consumer or if mailed to the owner or consumer, directed to, or left at the address as shown on the city's utility account records.

(b) All notices of a general character, affecting or likely to affect more than one hundred owners or consumers, if required by these rules to be given, shall be deemed to have been properly given or served if advertised at least once in a weekly newspaper.

Sec. 18-5. Protection of city property.

It shall be the consumer's responsibility to properly protect all facilities of the city's water system and sewer system on the consumer's premises or easement. In the event of any loss or damage to the city’s water system and sewer system caused by or arising out of carelessness, neglect or misuse by the consumer, the cost of

repairing the damage shall be paid by the consumer. Such charges may be added to and collected with the water utility bills.

Sec. 18-6. City not liable for failure of service.

The city will at all times use reasonable diligence to provide continuous service and having used due diligence shall not be liable to the consumer for complete or partial failure or interruption of service, or for fluctuations in pressure, resulting from causes beyond its control, or through the ordinary negligence of its employees, servants, or agents, nor shall the city be liable for the direct or indirect consequences of interruptions or curtailments made in accordance with the provisions of any of its rate schedules. The city shall not be liable for any act or omission caused directly or indirectly by strikes, labor troubles, accidents, litigation, shutdowns or repairs or adjustments, interference by federal, state, or municipal governments, acts of God, for any damage resulting from the bursting of any main, service pipe, from the shutting off for repairs, extensions or connections, or for the accidental failure of supply from any cause whatsoever. In case of emergency, the city shall have the right to restrict the use of utilities in any reasonable manner for the protection of the public, the city and its utilities.

Sec. 18-7. Consumer to indemnify city against certain losses.

By applying for and/or receiving service from the city, the consumer agrees to indemnify, hold harmless and defend the city from and against any and all liability or loss in any manner directly or indirectly growing out of the transmission and use of water or sewer system by the consumer at or on the consumer's side of the point of delivery or connection.

Sec. 18-8. Consumers to grant easements, etc.; access to premises by city employees.

The consumer shall grant or cause to be granted to the city without cost all rights, easements, permits, and privileges which are necessary for the rendering of service. Employees of the city and the city’s agents and contractors (under the city's direction) shall have safe access at all reasonable hours to the consumer’s premises for the purpose of reading meters; installing, inspecting, repairing or removing any of its equipment or facilities; or, for any purpose incidental to the rendering of service. Safe access shall be granted at all times for emergency purposes. Safe access means physical access free from interference of any kind including, but not limited to, pets or other animals, fences or landscaping.

Sec. 18-9. Receiving service without paying for same.

It shall be unlawful for any person or consumer to receive or attempt to receive, except in the manner expressly authorized, utility service from the city without paying the required rates, fees and charges. The city reserves the right to seek

all charges, including without limitation undercharges, not paid in full by the consumer or property owner.

Sec. 18-10. Water utilities policy and procedures manual.

The city commission will establish standard policies and procedures for the water utilities department by adopting a policy and procedures manual by resolution ("PPM-W" hereafter), which may include, but shall not be limited to, consumer service and billing procedures; extension and connection policies; standard development agreements and forms; minimum design and construction standards; cross-connection control/backflow prevention requirements; pretreatment requirements; and, emergency water use restrictions, which are consistent with and/or supplementary to this chapter and other applicable laws, codes and regulations. After adoption by the city commission, the PPM-W may be amended from time to time based upon recommendations by the Water Utility Director and approval by the City Manager. The PPM-W shall have the same force and effect as a city ordinance.

Sec. 18-11. Application for service.

Application for service(s) shall be made on forms furnished by the city and shall constitute an agreement by the consumer with the city to abide by all applicable city ordinances, resolutions and policies as they relate to the water utility. The PPM-W of the city will set forth the process to apply for services.

Sec. 18-12. Rates, fees and charges.

The city commission shall adopt the rates, fees and charges for water utilities by resolution. The requirement for such rate, fee or charge shall be set forth in this chapter, the code or the PPM-W.

Sec. 18-13. Refusal or discontinuance of service by city.

As applicable, the city may refuse or discontinue service in accordance with the PPM-W.

Sec. 18-14. Deposits.

The amount of deposit required for residential or non-residential service; waiver of the deposit; adjustment of the deposit; and, refund of the deposit shall be set forth in the PPM-W.

Sec. 18-15. Water meters.

The requirements for meter testing and applicable charges, as well as the

applicable penalties for tampering with a meter shall be set forth in the PPM-W.

Sec 18-16. Meter tampering.

Title to meters and metering equipment shall be and remain with the city. Unauthorized connections to, or tampering with the city's meter(s) or meter seals, or indications or evidence thereof, or otherwise tampering with the system, will result in immediate discontinuance of service; criminal prosecution; adjustment of prior bills for services rendered; and/or, reimbursement to the city for all lost revenue, expenses incurred, a field investigation charge and civil liability under section 812.14(5), Florida Statutes, as amended from time to time. The PPM-W shall set forth the city's procedure for recovering expenses including, but not limited to, lost revenue due to alleged theft of service.

Sec. 18-17. Connection required.

(a) Every person or entity that owns or occupies real property within the city's water or sewer utility service area shall, within 180 days after being notified in writing by the city, connect to the city's water or sewer system when such system is available. The requirements for connecting to the water system are described below. The requirements for connecting to the sewer system are provided in Article V of this chapter.

(b) Property owners shall be notified when water is available as follows:

(1) Water service shall be considered available to existing residential dwellings and existing commercial or industrial establishments when a water main is within two hundred (200) linear feet from the nearest point of the property.

(2) All new dwellings and new commercial or industrial establishments shall be connected to the water system, unless excluded as part of an approved site plan.

(c) Any owner or occupant refusing, failing or neglecting to make such connections in accordance with the provisions of this section shall be in violation of this section. Violations of this section shall be enforced in accordance with code enforcement procedures by the issuance of a code enforcement citation or notice of violation to the property owner. If a citation is issued, the fine shall be set by resolution or the special magistrate. Each day of violation shall be considered a separate offense. Further, any violation of the provisions of this section may be prosecuted by the city in county court as a misdemeanor of the second degree and

punished by a fine and/or imprisonment in the county jail as set forth in the PPM-W. The city shall also be entitled to take any other appropriate legal action, including, but not limited to, cease and desist orders, other administrative action and requests for temporary and permanent injunctions to enforce the provisions of this section. It is the purpose of this subsection to provide additional cumulative remedies to the city to enforce this section.

(d) Applicable charges shall be in effect upon connection or 180 days after notification of the availability of service whichever occurs first.

Sec. 18-18. Extension of water or sewer service facilities of the city.

(a) Any person desiring to extend the city's water or sewer service facilities shall do so at his or her own cost and according to the guidelines set forth herein, by city resolution or in the PPM-W. Upon application to the city, the applicant or the city may design and/or construct the proposed facilities at the applicant's cost. All designs shall be approved by the water utilities director.

(b) If the city requires the applicant to install facilities greater than the facilities needed for the applicant's own use, the applicant shall install such facilities as required by the city at the applicant's own cost. The city, under a contract between the city and the applicant, shall reimburse the applicant the excess costs identified as being due to the oversizing of facilities.

(c) The applicant shall be required to extend water and/or sewer facilities across the entire frontage of the applicant's property to the property line with the adjoining property most distant from the point of connection.

(d) Upon completion of the water and/or sewer facilities as set forth in this section, the applicant shall convey such facilities and property rights attendant thereto to the city by an instrument suitable for such purpose.

(e) If the applicant is designing and/or constructing the facilities, the applicant shall provide the required bond and insurance in amounts and coverages satisfactory to the city.

Sec. 18-19. City construction standard and city approved products.

All utility construction and related product requirements shall be set forth in the PPM-W including without limitation, requirements for plan reviews and

inspections for projects requiring a Florida Health Department or Department of Environmental Protection permit.

Sec. 18-20. Adjustments to accounts.

Consumers who experience an involuntary or extraordinary use of water due to a leak may apply for an adjustment in accordance with the PPM-W.

ARTICLE III. EMERGENCY WATER USE

Sec. 18-21. Definitions.

The following words, terms and phrases, when used in this article, shall have the meanings ascribed to them in this section, except where the context clearly indicates a different meaning:

District means the South Florida Water Management District.

Water resource means any water on or beneath the surface of the ground, including natural or artificial watercourses, lakes, ponds or diffused surface water, and water percolating, standing or flowing beneath the surface of the ground.

Water shortage condition means that situation when sufficient water is not available to meet present or anticipated needs of persons using the water resource, or when conditions are such as to require temporary reduction in total water usage within a particular area to protect the water resource from serious harm. A water shortage usually occurs due to drought.

Water shortage emergency means that situation when the powers which can be exercised under 40E-21, Florida Administrative Code, are not sufficient to protect the public health, safety or welfare, or the health of animals, fish or aquatic life, or a public water supply, or commercial, industrial, agricultural, recreational or other reasonable uses.

Sec. 18-22. Intent and purpose.

It is the intent and purpose of this article to protect the city's water resources from the harmful effects of overutilization during periods of water shortage and allocate available water supplies by assisting the District in the implementation of its water shortage plan. The District's water shortage plan, as set forth in Chapter 40E-21, Florida Administrative Code, as same may be amended from time to time, is incorporated herein by reference as a part of this article.

Sec. 18-23. Applicability.

This article shall apply to all of the city's water service area and upon the declaration of a water shortage or water shortage emergency within all or any

part of the city by the governing board or the executive director of the District and shall invoke the provisions of this section and the PPM-W (as applicable). Upon such declaration, all water use restrictions or other measures adopted by the District applicable to the city, or any portion thereof, shall be subject to enforcement action pursuant to this article. Any violation of the provisions of this article; Chapter 40E-21, Florida Administrative Code; the applicable PPM-W provisions; or, any order issued pursuant thereto, shall be a violation of this article. This article shall not apply to persons using only salt water.

Sec. 18-24. Enforcement.

Every law enforcement officer having jurisdiction in the area governed by this article shall, in connection with all other duties imposed by law, diligently enforce the provisions of this article. In addition, the City Manager may delegate enforcement responsibility for this article to agencies and departments of the city in accordance with state, local law and applicable ordinances.

Sec. 18-25. Penalties.

(a) Except as may be provided in Chapter 40E-21 or in the PPM-W, violations of the provisions of this article are a civil infraction.

(b) Each day in violation of this article shall constitute a separate offense. For purposes of this article, no person shall be found to have committed a repeat violation based upon a violation of the provisions of this article that occurred during a prior water shortage or water shortage emergency which is no longer in effect.

(c) The provisions of this section are an additional and supplemental means of enforcing this article. Nothing contained herein shall prohibit enforcement by any other means, including, but not limited to, emergency injunctive action to enforce the provisions of this article.

Secs. 18-26 – 18-29. Reserved.

ARTICLE IV. BACKFLOW PREVENTION DEVICES

Sec. 18-30. Required.

Those consumers of the city's water system, as required and set forth by the PPM-W, shall install and maintain appropriate backflow prevention devices for the protection of the public potable water system from contamination or pollution.

Sec. 18-31. Testing.

All required backflow prevention devices shall comply with the testing requirements set forth in the PPM-W.

Secs. 18-32 – 18-39. Reserved.

ARTICLE V. SEWER USE

Division 1. General.

Sec. 18-40. General provisions.

The general provisions of this chapter, the applicable requirements set forth in the PPM-W and this article set forth uniform requirements for consumers of the city wastewater system and the East Central Regional Wastewater Treatment Facility (ECRWWTF) and enable the city and the ECRWWTF to comply with all applicable State and Federal laws including without limitation the Clean Water Act, 33 United States Code section 1251 et seq., and the General Pretreatment Regulations, Title 40 CFR Part 403, and Rule 62-625, F.A.C. (Pretreatment Requirements for Existing and Other Sources of Pollution). The objectives of this article are:

(1) To prevent the introduction of pollutants into the wastewater facilities that will interfere with its operation;
(2) To prevent the introduction of pollutants into the wastewater facilities that will pass through the wastewater facilities without adequate treatment and receiving waters, or otherwise be incompatible with the wastewater facilities;
(3) To protect wastewater facility personnel who may be affected by the wastewater in the course of their employment;
(4) To promote reuse and recycling of industrial wastewater and sludge from the wastewater facilities;
(5) To provide for fees for the equitable distribution of the cost of operation, maintenance, and improvement of the wastewater facilities; and
(6) To enable the City of West Palm Beach, which holds the National Pollutant Discharge Elimination System permit on behalf of the ECRWWTF, to comply with the NPDES permit conditions, sludge use and disposal requirements, and any other federal or state laws to which the wastewater facilities are subject.

This article and the applicable provision of the PPM-W shall apply to all consumers and users of the wastewater system, the ECRWWTF and the connected systems which also includes private sewer systems. It authorizes the issuance of individual wastewater discharge permits; provides monitoring, compliance, and enforcement activities; establishes administrative review procedures; and requires user reporting.

Except as otherwise provided, the water utilities director shall administer, implement, and enforce provisions of this article. Any powers granted to or duties

imposed upon the director may be delegated by the director to a duly authorized city employee.

Sec. 18-41. Use of public sewers required.

(a) All premises shall be provided, by the owner thereof, with at least one (1) toilet. All toilets shall be kept clean and in a sanitary working condition.

(b) No person shall dispose of human excrement except in a working toilet.

(c) It shall be unlawful to discharge to any natural outlet within the city, or in any area under the jurisdiction of said city, any wastewater or other polluted waters, except where suitable treatment has been provided in accordance with subsequent provisions of this article and the PPM-W.

(d) Except as hereinafter provided, it shall be unlawful to construct or maintain any privy, privy vault, septic tank, cesspool, or other facility intended or used for the disposal of wastewater.

(e) All consumers or owners are hereby required, at their expense, to install suitable toilet facilities and shall be responsible for and properly maintain all sewer lines, facilities and/or connections on their property up to and including the connection with the sewer system.

(f) All sinks, dishwashing machines, lavatories, basins, shower baths, bathtubs, laundry tubs, washing machines, and similar plumbing fixtures or appliances shall be connected to the sewer system; provided that, if sewer service is not available, septic tanks or other private subsurface disposal facilities may be used if approved by the appropriate agency having governing jurisdiction and the city.

(g) Property owner(s) shall be notified when sewer is available as described below.

(1) Sewer service shall be considered available to an existing single family dwelling when the dwelling can be connected by gravity flow to a line within 100 feet from the nearest point of the property.

(2) Sewer service shall be considered available to any new single-family dwelling when the dwelling can be connected by the installation of two hundred (200) linear feet of gravity flow line from the nearest point of the property.

(3) All other existing dwellings and commercial or industrial establishments shall be connected to the public sewer when the gravity sewer or force main is located within two hundred (200) feet from the nearest point of the property.

(4) All other new dwellings and commercial or industrial establishments shall be connected to sewer facilities unless excluded as part of an approved site plan.

Sewer charges shall be in effect upon connection or 180 days after notification of the availability of sewer service whichever occurs first.

Sec. 18-42. Building sewers and connections.

No unauthorized person shall uncover, make any connections to or openings into, use, alter, or disturb any public sewer or appurtenance thereto without first obtaining a written permit from the water utilities director and as set forth by the PPM-W.

Division 2. Prohibited Discharge Standards.

Sec. 18-43. Applicability.

The provisions of this division, as supplemented by the PPM-W, shall apply to all users and consumers of the structure, equipment, and processes required to collect, carry away, and treat domestic, industrial, medical, and other wastes and dispose of the effluent including facilities of the city sewer system, the ECRWWTF and the connected systems (the "WWF" hereafter).

Sec. 18-44. Prohibited discharge standards.

Users shall not discharge pollutants into the WWF unless in accordance with this division and the PPM-W.

(a) *Discharge prohibitions.* As defined in the PPM-W, no user shall discharge into the WWF any waste or wastewater which may cause pass-through or interfere with the operation or performance of the WWF.

(b) *Compliance with national and local standards.* As defined in the PPM-W, it shall be unlawful for any person to discharge any pollutant into the WWF except when such discharge is in compliance with federal standards promulgated pursuant to the Act, and any other more stringent state and local standards. Wastes containing concentrations in excess of the National Categorical Pretreatment Standards are prohibited.

(c) *Local pretreatment standards.* Any wastes containing concentrations in excess of the local pretreatment standards as set forth in the PPM-W are prohibited.

(d) *Right of revision.* The city reserves the right to establish herein or in the PPM-W or in wastewater discharge permits, more stringent limitations or

requirements on discharges to the WWF if deemed necessary to comply with the requirements of this division or applicable law.

(e) *Dilution.* No user shall ever increase the use of process water, or in any way attempt to dilute a discharge, as a partial or complete substitute for adequate treatment to achieve compliance with the limitations unless expressly authorized by an applicable federal categorical pretreatment standard, or in any other pollutant-specific limitation developed by the state. The city may impose mass limitations on users which are using dilution to meet applicable pretreatment standards or requirements or in other cases when the imposition of mass limitations is appropriate.

(f) *Septic and industrial waste hauling.* Septic and industrial waste hauling shall be governed by the provisions and regulations set forth in the PPM-W.

(g) *Control of discharge.* If any wastes or wastewaters are discharged, or are proposed to be discharged, to the WWF which contain the substances or possess the characteristics prohibited by this article and/or the PPM-W, do not meet applicable pretreatment standards and requirements, and/or which may have a deleterious effect upon the WWF, its processes, equipment, or receiving waters, or which otherwise create a hazard to life or constitute a public nuisance, the city may:

(1) Reject the wastes or deny or condition the introduction of new sources of wastewater to the WWF; or
(2) Require the industrial user to demonstrate that in-plant improvements will modify the discharge to such a degree as to be acceptable; and/or
(3) Require pretreatment of the industrial user's discharge to ensure compliance with this article; and/or
(4) Require payment of an industrial waste surcharge to cover the added cost of handling and treating excess loads imposed on the WWF by such discharge. Surcharge amounts shall be established by a resolution of the city, together with a schedule of rates and fees of the WWF. Imposition of industrial waste surcharges for the recovery of treatment costs does not replace or supersede the requirements for pretreatment facilities, should they be found necessary by the city; or,
(5) Take such other action as set forth in the PPM-W.

Sec. 18-45. Pretreatment.

(a) *Pretreatment facilities.* As set forth in the PPM-W, consumers shall provide wastewater treatment as necessary to comply with this division and shall achieve compliance with all categorical pretreatment standards, local limits, and the prohibitions set forth in the PPM-W within the time

limitations specified by EPA, the state or the city, whichever is more stringent. Any pretreatment facility shall be provided, operated, and maintained at the user's sole cost and expense. Detailed plans prepared by a registered engineer in the state describing such facilities and operating procedures must be approved in writing by the city before such facilities are constructed. The review and approval of such plans and operating procedures shall not relieve user from the responsibility of modifying such facilities as necessary to produce a discharge in compliance with this division.

(b) *Additional pretreatment measures.* Additional pretreatment measures, including without limitation the requirement for accidental discharge/slug control plans, shall be as required in the PPM-W.

Sec. 18-46. Industrial wastewater discharge permit.

(a) It is unlawful to discharge industrial waste without a permit. Application for a permit and the process for the same shall be as set forth in the PPM-W. Any violation of the terms and conditions of a permit shall be deemed a violation of this division and shall subject the permit holder to sanctions set out in the code and the PPM-W. Obtaining a permit does not relieve a person of its obligation to comply with all federal and state pretreatment standards or requirements or with any other requirements of federal, state, and local law. The city may require other users, including liquid waste haulers and non-discharging users to obtain permits as necessary to carry out the purposes of this division.

(b) *Special agreements.* The city reserves the right to enter into special agreements with users setting out special terms under which they may discharge to the WWF. In no case will a special agreement waive compliance with a categorical pretreatment standard or requirement.

(c) *Regulation of discharge from other jurisdictions.* In the event another jurisdiction or municipality contributes all or a portion of its wastewater to the WWF, the city shall require the jurisdiction or municipality to enter into a multi-jurisdictional agreement with the city or the control authority. The requirements for a multi-jurisdictional agreement shall be set forth in the PPM-W.

Sec. 18-47. Reporting requirements.

Reporting requirements for users and consumers under this division shall be in accordance with the requirements of the PPM-W.

Sec. 18-48. Protection from damage.

No person shall maliciously, willfully, or negligently break, damage, destroy, uncover, deface, or tamper with any structure, appurtenance, or equipment which is a part of the WWF. Costs of any damage to WWF caused by such acts or costs associated with additional treatment or alternative disposal method required to meet effluent or sludge treatment and disposal requirements resulting from violations of this division shall be paid by the user or consumer responsible for the violations.

Sec. 18-49. Powers and authority of inspectors.

(a) Authorized representatives of the city, the DEP, and the EPA bearing proper credentials shall be permitted to enter upon any property without prior notification for the purpose of inspection, observation, measurement, sampling, testing review and/or photocopying of records, or investigation as may be necessary in the enforcement of this division. Entry shall be made during daylight or operating hours unless abnormal or emergency circumstances require otherwise.

(b) The city may seek issuance of a search warrant(s) from any court of competent jurisdiction for the following reasons:

(1) Refusal of access to a building, structure or property or any part thereof.

(2) If the city is able to demonstrate probable cause to believe that there may be a violation of this division.

(3) If there is a need to inspect and/or sample as part of a routine inspection and sampling program of the city.

(4) To protect the public health, safety and welfare of the city.

Sec. 18-50. Enforcement actions.

The escalating enforcement strategy set forth in the PPM-W shall be used by the city when any person is out of compliance with this division. The various types of enforcement actions, including the industrial discharger enforcement procedure (IDEP), shall be used as determined by the city depending on the circumstances of the violation and the PPM-W.

Sec. 18-51. Permit fees, surcharges and penalties.

(a) Permit fees, industrial surcharges and penalties under this division shall be set forth in the PPM-W and as adopted by city resolution.

(b) Any person who violates a provision of this division may be prosecuted in the name of the state in a court having jurisdiction of misdemeanors by the

prosecuting attorney thereof, and upon conviction shall be punished by a fine as set forth in the PPM-W.

(c) Any person who knowingly makes any false statement, representation or certification in any record or other document submitted under this division of industrial user permits shall be subject to fines set forth in the PPM-W.

Sec. 18-52. Civil and criminal remedies.

In addition to the administrative fines provided in this division, the city is hereby authorized to institute any appropriate action or proceeding, including without limitation suit for injunctive relief and civil penalties up to a maximum amount per day per violation as set forth in the PPM-W, in order to prevent or abate violations of this division. The city may recover reasonable attorney's fees, court costs, and other expenses associated with enforcement of this division, including sampling and monitoring expenses, and the costs of any actual damages incurred by the city.

(a) *Injunctive relief.* When the city finds that a user has violated, or continues to violate, any provision of this division, a permit, or order issued hereunder, or any other pretreatment standard or requirement, the city may petition the circuit court for the issuance of a temporary or permanent injunction, as appropriate, which restrains or compels the specific performance of the permit, order, or other requirement imposed by this division on the activities of the user. The city may also seek such other action as is appropriate for legal and/or equitable relief, including a requirement for the user to conduct environmental remediation. A petition for injunctive relief shall not be a bar against, or a prerequisite for, taking any other action against a user.

(b) *Criminal prosecution.*

(1) A user who willfully or negligently violates any provision of this division, a permit, or order issued hereunder, or any other pretreatment standard or requirement shall, upon conviction, be guilty of a misdemeanor, punishable by a fine of not more than the maximum fine allowed under state law per violation, per day, or imprisonment, or both.

(2) A user who willfully or negligently introduces any substance into the WWF which causes personal injury or property damage shall, upon conviction, be guilty of a misdemeanor and be subject to a penalty of at least the maximum fine allowed under state law, or be subject to imprisonment, or both. This penalty shall be in addition to any other cause of action for personal injury or property damage available under state law.

(3) A user who knowingly makes any false statements, representations, or certifications in any application, record, report, plan, or other documentation filed, or required to be maintained, pursuant to this division, permit, or order issued hereunder, or who falsifies, tampers with, or knowingly renders inaccurate any monitoring device or method required under this division shall, upon conviction, be punished by a fine of not more than the maximum fine allowable under state law per violation, per day, or imprisonment or both.

(4) In the event of a second conviction, a user shall be punished by a fine of not more than the maximum fine allowable under state law per violation, per day, or imprisonment, or both.

(c) *Remedies nonexclusive.* The remedies provided for in this division are not exclusive. The city may take any, all, or any combination of these actions against a noncompliant user. Enforcement of pretreatment violations will generally be in accordance with the city's enforcement response plan. However, the city may take other action against any user when the circumstances warrant. Further, the city is empowered to take more than one (1) enforcement action against any noncompliant user.

Sec. 18-53. Notification requirements and affirmative defenses to accidental discharge, upset, and bypass.

The notification requirements and affirmative defenses to accidental discharge, upset and bypass shall be as set forth in the PPM-W.

Sec. 18-54. Confidentiality.

Information and data concerning individual industrial users obtained from reports, questionnaires, permit applications, permits, monitoring programs, and inspections shall be available to the public to the extent permitted by state law without restriction unless the industrial user specifically requests and is able to demonstrate to the satisfaction of the city that such release would divulge information, processes, or methods of production entitled to protection as trade secrets under applicable state law. Notwithstanding the foregoing, wastewater constituents and characteristics will not be recognized as trade secrets or confidential information.

Sec. 18-55. Violations.

Violations of this division may result in the city taking specific action to protect the health, safety and welfare of the city, including without limitation, suspending or disconnecting water and/or wastewater service and/or revoking any and all related permits. The applicable violation procedures, process and requirements shall be set forth in the PPM-W.

Secs. 18-56 – 18-59. Reserved.

ARTICLE VI. WATER AND SEWER CAPACITY CHARGES

Sec. 18-60. Water and sewer reserve capacity charges.

The city shall require water and sewer reserve capacity charges to offset the capital investments required to provide needed water production and sewer collection and pumping facilities. Water and sewer reserve capacity charges shall be set forth in the PPM-W and the amount or calculation thereof set by city resolution.

Secs. 18-61 – 18-69. Reserved.

ARTICLE VII. STORMWATER UTILITY

Division 1. General.

Sec. 18-70. Authority.

The city is authorized by the Florida Constitution and the provisions of Chapter 166 and section 403.0893, Florida Statutes, to construct, reconstruct, improve, and extend stormwater utility system and to issue revenue bonds and other debts if needed to finance in whole or part the cost of such system and to establish just and equitable rates, fees, and charges for the services and facilities provided by the system.

Maintenance of the stormwater management system includes but is not limited to inlets, conduits, manholes, channels, ditches, drainage easements, retention and detention basins, infiltration facilities, swales, and other components as well as natural waterways. All elements of these storm and surface water management systems, which provide for the collection, storage, treatment, and conveyance of stormwater, are of benefit and provide services to all property within the city.

Sec. 18-71. Findings and determinations.

It is hereby found, determined, and declared as follows:

(1) Those elements of the city stormwater management system which provide for the collection and disposal of stormwater and regulation of groundwater are of benefit and provide services to all property within the incorporated city limits, including property not presently served by the storm elements of the system.

(2) The costs of operating and maintaining the city stormwater management system and financing necessary repairs, replacement, improvements, and extension thereof should, to the extent practicable, be allocated in relationship to the benefits enjoyed and services received therefrom.

Sec. 18-72. Definitions.

For the purpose of this article, the following definitions shall apply; words used in singular shall include the plural, and the plural, the singular; words used in the present tense shall include the future tense. The word "shall" is mandatory and not discretionary. The word "may" is permissive. Words not defined herein shall be construed to have the meaning given by common and ordinary use as defined in the latest edition of Webster's Dictionary.

Authorized official means any employee or agent of the city authorized by the director to administer or enforce the provisions of this article.

Availability charge means a charge to a developer or individual resident to recover the debt service and extension and replacement costs paid for a stormwater management system facility that had been previously constructed, but which serves such developer or individual resident.

Best Management Practices (BMPs) means management techniques recognized to best minimize pollutant and sediment loadings from stormwater runoff.

Bonds means revenue bonds, notes, loans or any other debt obligations issued or incurred to finance the costs of construction.

Costs of construction means costs reasonably incurred in connection with providing capital improvements to the system or any portion thereof, including but not limited to the costs of (1) acquisition of all property, real or personal, and all interests in connection therewith, including all rights-of-way and easements therefor (2) physical construction, installation and testing, including the costs of labor, services, materials, supplies and utility services used in connection therewith, (3) architectural, engineering, legal and other professional services, (4) insurance premiums taken out and maintained during construction, to the extent not paid for by a contractor for construction and installation, (5) any taxes or other charges which become due during construction, (6) expenses incurred by the city or on its behalf with its approval in seeking to enforce any remedy against any contractor or sub-contractor in respect of any default under a contract relating to construction, (7) principal of and interest on any bonds, and (8) miscellaneous expenses incidental thereto.

Debt service means, with respect to any particular fiscal year and any particular series of bonds, an amount equal to the sum of (i) all interest payable on such

bonds during such fiscal year, plus (ii) any principal installments of such bonds during such fiscal year.

Detention means the collection and temporary storage of stormwater in such a manner as to provide treatment through physical, chemical or biological processes with subsequent gradual release of the stormwater.

Developed property means real property which has been altered from "natural" state by the addition of any improvements such as a building, structure, or impervious surface. For new construction, property shall be considered developed pursuant to this article: (a) upon issuance of a certificate of occupancy, or upon completion of construction or final inspection if no such certificate is issued; or (b) if construction is at least fifty per cent (50%) complete and construction is halted for a period of three (3) months.

Director means the director of public services or his or her designee.

Dwelling unit means a single unit or apartment providing complete, independent living facilities for one (1) or more persons including permanent provisions for living, sleeping, eating, cooking and sanitation.

Equivalent residential unit or *ERU* means the average impervious area of residential developed property per dwelling unit located within the city and as established by resolution as provided herein.

ERU rate means a utility fee charged on each ERU as established by resolution as provided herein.

Extension and replacement means costs of extensions, additions and capital improvements to, or the renewal and replacement of capital assets of, or purchasing and installing new equipment for, the system, or land acquisition for the system and any related costs thereto, or paying extraordinary maintenance and repair, including the costs of construction, or any other expenses which are not costs of operation and maintenance or debt service.

Fee-in-lieu-of means a charge to a developer or individual resident to recover (1) the costs of construction and debt service on a new stormwater management system facility which serves such developer or individual resident, or (2) the extension and replacement costs necessitated by development undertaken by such developer or individual resident.

Fiscal year means a twelve-month period commencing on the first day of October of any year, or such other twelve-month period adopted as the fiscal year of the utility.

Impervious area means metal roofed and paved areas, including, but not limited to, areas covered by roofs, roof extensions, patios, porches, driveways, sidewalks, parking areas and athletic courts.

Nonresidential developed property means developed property that is classified by the property appraiser as land use types 10 through 99 using the Florida Department of Revenue Land Use Codes, as amended or supplemented.

Operating budget means the annual utility operating budget adopted by the city for the succeeding fiscal year.

Operations and maintenance means the current expenses, paid or accrued, of operation, maintenance and current repair of the system, as calculated in accordance with sound accounting practice, and includes, without limiting the generality of the foregoing, insurance premiums, administrative expenses, labor, executive compensation, the cost of materials and supplies used for current operations, and charges for the accumulation of appropriate reserves for current expenses not annually incurred, but which are such as may reasonably be expected to be incurred in accordance with sound accounting practice.

Property appraiser means the office of the county property appraiser.

Residential developed property means developed property that is classified by the property appraiser as land use types 00 through 09 using the Florida Department of Revenue Land Use Codes, as amended or supplemented.

Retention means the prevention of stormwater runoff from direct discharge into receiving waters by utilizing discharge systems such as percolation, exfiltration, and evaporation processes.

Revenues means all rates, fees, assessments, rentals or other charges or other income received by the utility, in connection with the management and operation of the system, including amounts received from the investment or deposit of moneys in any fund or account and any amounts contributed by the city, all as calculated in accordance with sound accounting practice.

Site of industrial activity or *industrial site* means any area or facility used for manufacturing, processing or raw materials storage, as defined under 40 CFR section 122.26(a)(14) of the U.S. Environmental Protection Agency, as amended.

Stormwater means any stormwater runoff, surface runoff and/or drainage.

Stormwater management system or *system* means the existing stormwater management system of the city and all improvements thereto used for collecting, storing, and transporting stormwater which by this article is constituted as the property and responsibility of the utility, to be operated as an enterprise fund to, among other things, conserve water, control discharges necessitated by rainfall

events, incorporate methods to collect, convey, store, absorb, inhibit, treat, use or reuse water to prevent or reduce flooding, over-drainage, environmental degradation and water pollution or otherwise affect the quality and quantity of discharge from such system.

Undisturbed parcel means a parcel which has not been altered from its natural state by dredging, filling, removal of trees and vegetation or other activities which have disturbed or altered the topography or soils on the property.

Utility fee means a utility fee authorized by Florida law and this article which is established to pay operations and maintenance, extension and replacement and debt service.

Stormwater management utility or *utility* means the enterprise fund utility created by this article to operate, maintain and improve the system.

Sec. 18-73. Establishment of stormwater management utility.

(a) The stormwater management utility is hereby established to provide for the general welfare of the city and its residents.

(b) The director shall be the chief staff member of the utility.

Sec. 18-74. Operating budget.

The city shall adopt an operating budget not later than the first day of each fiscal year. The operating budget shall set forth for such fiscal year the estimated revenues and the estimated costs for operations and maintenance, extension and replacement and debt service.

Sec. 18-75. Required levels of rates for utility fees.

The city commission shall require that adequate revenues are generated to provide for a balanced operating budget by at least annually setting sufficient levels of utility fees.

Sec. 18-76. Imposition of utility fees.

The city commission hereby authorizes the imposition of utility fees on all property within the city.

Sec. 18-77. Rate schedule.

(a) *Property classification.* For purposes of assessing the utility fee, the following property classes will identify the customer base:

(1) Residential developed property;

(2) Nonresidential developed property; and
(3) Undisturbed parcel.

(b) *Computation of utility fee for residential developed property.* The utility fee for residential developed property shall be the ERU rate multiplied by the number of individual dwelling units existing on the property.

(c) *Computation of utility fee for nonresidential developed property.* The utility fee for nonresidential developed property shall be the ERU rate multiplied by the numerical factor obtained by dividing the total impervious area for a nonresidential developed property by one (1) ERU. The minimum utility fee for any nonresidential developed property shall be equal to one (1) ERU rate.

(d) *Computation of utility fee for undisturbed parcels.* Undisturbed parcels shall be exempted from the utility fee.

Sec. 18-78. Billing.

The frequency of billing is to be established by the city based on an assessment of the most efficient, effective and equitable method of billing and collections available to the utility. The utility fee shall be billed at least annually by the city but no more than twelve (12) times in one calendar year. The utility may pursue billing and collections of the utility fee through the non-ad valorem levy, collection, and enforcement method as provided for in chapter 197, Florida Statutes, or as part of a consolidated statement with other city utilities, or any other manner authorized by law.

Sec. 18-79. Adjustment of fees.

(a) Requests for adjustment of the utility fee for nonresidential developed property shall be submitted to the director, who is hereby given the authority to develop and administer the procedures and standards for the adjustment of fees as established herein. All requests shall be judged on the basis of the amount of impervious area on the site. No credit shall be given for the installation of facilities required by city or county development codes or state stormwater rules. The following procedures shall apply to all adjustment requests of the utility fee:

(1) Any customer who has paid his or her utility fee and who believes his or her utility fee to be incorrect may, subject to the limitations set forth in this article, submit an adjustment request to the director.
(2) Adjustment requests shall be in writing and set forth, in detail, the grounds upon which relief is sought.
(3) Adjustment requests made during the first calendar year that the utility fee is imposed will be reviewed by the director within a two-

month period from the date of filing of the adjustment request. Adjustments resulting from such request shall be retroactive to the beginning of billings, but retroactive adjustment shall not exceed one (1) year.

(4) The customer requesting the adjustment may be required, at his or her own cost, to provide supplemental information to the director, including, but not limited to, survey data approved by a registered professional land surveyor (R.P.L.S.) and engineering reports approved by a professional engineer (P.E.). Failure to provide such information may result in the denial of the adjustment request.

(5) Adjustments to the utility fee will be made upon the granting of the adjustment request, in writing, by the director. Denials of adjustment requests shall be made, in writing, by the director.

(b) Upon receipt of the written denial of an adjustment request, the customer who initially requested the adjustment may, within thirty (30) days of receipt of such denial, appeal to the city commission for review of the denial. Such appeal shall not be a de novo appeal but shall be based on the material initially submitted to the director.

(1) The commission shall complete its review within thirty (30) days of receipt of said request for review. The city commission's determination shall be in writing and set forth, in detail, the reason or reasons for its decision.

(2) In reviewing denials of adjustment requests, the city commission shall apply the standards and review criteria contained in this article.

Sec. 18-80. Capital contributions.

(a) Where the city has constructed or plans to construct stormwater facilities which are proposed to be used by a developer or owner in lieu of a facility usually required to be constructed by the developer or owner, the city may accept a capital contribution from the developer or owner and waive certain construction requirements.

(b) Procedures and standards developed by the city shall define appropriate means by which to optimize the developer's or owner’s capital contributions in the construction or refunding of stormwater systems. These capital contributions shall take the form of fee-in-lieu-of or availability charges. Each situation will be analyzed by the city and a specific written decision will be developed. The application of each is defined as follows:

(1) Fee-in-lieu-of is applied to a site specific negotiated procedure, wherein a development's stormwater contribution (quantity and quality) is assessed its share of the capital needs of the facilities required to serve the development in question. This capital contribution would be used for the construction and refunding of city-owned stormwater facilities. The process does not apply when the stormwater facilities are privately held. Each application is evaluated against the city's master plan, or where the master plan is incomplete, against the cumulative impacts of the development.

(2) Availability charge is administered on a site specific basis identical to the fee-in-lieu-of procedure noted above. The only difference is that the capital investment advanced by the city in implementing a stormwater facility is now recovered through an availability charge. The capital charge is determined on a prorata share of the capacity used by the new development as measured by the cumulative impact of the development upon all impacted facilities applied to the present worth of the original capital expenditure.

Sec. 18-81. Program responsibility.

It shall be the duty of the department of public services to administer the stormwater management utility. The department shall keep an accurate record of all persons using the services and facilities of said stormwater management system of the city and to make changes in accordance with the rates and changes established in this article.

Sec. 18-82. Stormwater management utility trust funds.

There shall be established a stormwater management utility trust fund for the deposit of all fees and charges collected by the stormwater utility. These funds shall be for the exclusive use of the city's stormwater management utility, including but not limited to the following:

(1) Administrative costs associated with the management of the stormwater management utility.
(2) Planning and engineering.
(3) Operation and maintenance of the system.
(4) Funding of pollution abatement devices constructed on stormwater systems discharging to the surface water of the city.
(5) Debt service financing.

Sec. 18-83. Stormwater utility policy and procedures manual.

The city commission will establish standard policies and procedures for the stormwater utility system by adopting a policy and procedures manual by resolution ("PPM-S" hereafter), which may include, but shall not be limited to, rules and regulations for various stormwater procedures, restrictions and BPMs; extension and connection policies; standard agreements and forms; and, minimum design and construction standards, which are consistent with and/or supplementary to this chapter and other applicable laws, codes and regulations. After adoption by the city commission, the PPM-S may be amended from time to time based upon recommendations by the Public Services Director and approval by the City Manager. The PPM-S shall have the same force and effect as a city ordinance.

Division 2. Prohibited Discharge Standards.

Sec. 18-84. Discharge prohibited to stormwater system.

Any discharge into the stormwater system in violation of any federal, state, county, municipal or other law, rule, regulation or permit is prohibited and unlawful. It is also prohibited and unlawful for any person or facility to deposit any solids or discharge any liquid or gas that is not identified as acceptable stormwater or an identified allowable deposit or discharge directly or indirectly into the stormwater system. Such prohibited deposits and discharges are determined to be contaminants and or pollutants.

(a) Solids: Solids are defined as materials and particulates suspended in or capable of being deposited in and or transported by stormwater. The allowable limits of solids occurring in stormwater are as found in the city's most recent Stormwater National Pollutant Discharge Elimination System (NPDES) permit.

(b) Erosion control/construction sites: No property owner or other person shall allow through purpose or neglect, uncontrolled earthen exposure to deposit soil and related debris into any stormwater system.

(c) Litter/trash/garbage: No person or facility may deposit any litter, trash, or garbage in any manner that will result in the material being transported by or obstructing a stormwater system.

(d) Landscaping materials shall not be deposited in the storm system. All materials related to lawn and landscape maintenance capable of being transported by or obstructing a stormwater system must be controlled by the use of container and cover or compostable bag.

(e) No person or facility shall allow through purpose or neglect the discharge of any volatile or organic solids, liquids, or gas into a stormwater system (i.e., benzene, motor oil, anti-freeze, soaps, chlorine, grease, etc.).

(f) No sewage, industrial waste or other waste materials shall be discharged into the system. Animal feces must be disposed of in an appropriate manner.

(g) Cooling and/or condensing water may only be discharged to the stormwater system if a NPDES permit is obtained from the FDEP.

Sec. 18-85. Exemptions.

The following activities as defined in chapter 62-624.200, Florida Administrative Code, as amended, shall be exempt from the requirements of this division to the extent that these discharges meet state water quality standards:

(a) Water line flushing;
(b) Landscape irrigation;
(c) Rising ground waters;
(d) Uncontaminated ground water infiltration (as defined at 40 CFR 35.2005(20));
(e) Uncontaminated pumped ground water;
(f) Discharges from potable water sources;
(g) Irrigation water;
(h) Water from crawl space pumps;
(i) Footing drains;
(j) Lawn watering runoff;
(k) Water from individual residential car washing;
(l) Flows from riparian habitats and wetlands;
(m) Dechlorinated swimming pool discharges;
(n) Residual street wash water; and,
(o) Discharges or flows from firefighting activities.

Sec. 18-86. NPDES permits.

(a) Any person who holds a NPDES permit which provides for an authorized connection and/or authorized discharge to the city's system or regulated waters, shall provide a copy of such permit to the Department of Public Services no later than 60 calendar days after the effective date of this chapter or 30 calendar days after the issuance of said permits.

(b) Authorized discharges to the city's system shall be controlled so that they do not impair the operation of the city's system or contribute to the failure of the city's system to meet any applicable local, state, or federal law or regulation.

(c) Authorized discharges to regulated waters shall be controlled so that they do not adversely impact the quality or beneficial uses of those waters or result in violation of any applicable local, state, or federal law or regulation.

Sec. 18-87. Inspections.

(a) An authorized official shall be permitted to enter any building, structure, or property for the purpose of inspecting facilities or activities discharging or suspected of discharging to the system or regulated waters in order to enforce this division and to investigate potential violations of this division.

All structures and processes that allow, contribute, or are exposed to stormwater discharges, and all records concerning them, shall be made accessible or available to authorized official for monitoring the quality of existing or potential stormwater discharges. Consent to such access shall be obtained from a person of suitable age and discretion therein or in control thereof. If such consent is refused, the city may seek enforcement pursuant to law.

(b) Any authorized official may install and maintain such devices as are necessary to conduct sampling or monitoring of discharges to the separate storm sewer system. During any inspections made to enforce the provisions of this division, or regulations or permits issued under this article, any authorized official may take any samples deemed necessary.

(c) The director may require any person engaging in any activity or owning any property, building or facility (including, but not limited to, a site of industrial activity) to undertake reasonable monitoring of any discharge(s) to the stormwater system and to furnish periodic reports.

(d) As part of the NPDES program, FDEP officials may also, at any given time, request permission to inspect any site or facility for NPDES compliance.

(e) The city may charge the applicable owner or person a reasonable fee for the cost of on-site inspection or re-inspection of stormwater, erosion, and sediment control plans associated BMPs if it is found applicant is in violation. The amount of the fee is established by resolution or ordinance.

Sec. 18-88. Discharges from commercial, industrial, or construction activities to the stormwater system or regulated waters.

(a) Stormwater from areas of any commercial, industrial, or construction activities shall be controlled, treated, and managed on-site using BMPs so as not to cause an illegal discharge to the city's system or regulated waters.

(b) All erosion, pollutant, and sediment controls required by any applicable local, state, or federal permit, including elements of a stormwater pollution prevention plan required under a NPDES permit and the city's Land Development Regulations, shall be properly implemented, installed, operated, and maintained so as to effectively prevent polluted stormwater discharges.

(c) On-site disposal and temporary storage of construction-related materials and wastes at construction sites such as discarded building materials, concrete truck washout, chemicals, litter, and sanitary waste shall be controlled through effective implementation of BMPs so as to effectively

prevent mixing with stormwater, which may result in polluted stormwater discharges.

(d) Authorized discharges to the city's system shall be controlled so that they do not impair the operation of the city's system or contribute to the failure of the city's system to meet any applicable local, state, or federal law or regulation.

(e) Authorized discharges to regulated waters shall be controlled so that they do not adversely impact the quality or beneficial uses of those waters or result in violation of any applicable local, state, or federal law or regulation.

Sec. 18-89. Control of pollutant contributions from interconnected systems and privately-owned stormwater facilities.

Stormwater flows from interconnected stormwater systems and privately-owned stormwater facilities shall be controlled so that they do not impair the operation of or contribute to the failure of the receiving stormwater system and privately-owned stormwater facilities to meet any applicable local, state, or federal law or regulation. Owners of an interconnected stormwater system and privately-owned stormwater facilities shall be responsible for the quality within their portion of the system and shall coordinate with the owners of the downstream (receiving) interconnected stormwater system.

Sec. 18-90. Reporting and correction of illegal connections and illegal discharges.

(a) Persons responsible for and/or currently operating known illegal connections or illegal discharges shall immediately initiate procedures to cease discharging and provide suitable containment facilities. Such procedures shall include a schedule for implementing proposed corrective measures that must be approved by the Director or the Director's designee.

(b) The construction, use, maintenance, or continued existence of illegal connections to the city's system is prohibited. This prohibition includes illegal connections made prior to the effective date of this section, regardless of whether the connection was permissible under law or practices applicable or prevailing at the time of connection. Immediately upon discovery, persons currently operating an illegal connection shall initiate procedures to cease discharging, remove said illegal connection, and proceed in cleanup of any discharge.

(c) As soon as a person responsible for and/or currently operating a commercial, industrial, or construction activity obtains information of a suspected and/or potential illegal discharge or illegal connection to the system or regulated waters from said activity, then all necessary actions

shall be taken to locate the illegal discharge or illegal connection and, upon discovery, immediately initiate procedures to prevent and/or cease the illegal discharge and/or remove the illegal connection. Further, a schedule for implementing additional proposed corrective measures including authorized containment and cleanup of any discharge shall be submitted in writing to the Public Services Department for approval prior to implementation. In the event of a discharge of a hazardous material said person shall immediately notify emergency response officials of the occurrence via emergency dispatch services (911).

(d) The city may require, by written notice, that any owner and/or person engaged in any activity or owning or operating any facility that may cause or contribute to Illegal connections or illegal discharges to the city's system or regulated waters to undertake at said owner's and/or person's expense such monitoring and analysis and furnish such reports to the city as deemed necessary to determine compliance with this section.

(e) All owners and/or persons in violation of this divison shall address such violations immediately. Violations shall be addressed as set forth in this division by providing a written response to the Public Services Department, outlining the temporary and permanent measures that have or will be taken to correct the violation and a proposed schedule for completion of each of the corrective measures. Corrective actions are subject to the approval of the Director.

(f) Persons responsible for a discharge which adversely impacts the system or a regulated water shall be liable for all sampling and analytical costs incurred in monitoring the discharge; any city, county, state or federal fines imposed as a result of the discharge; and the cost of removing or properly treating the discharge for complete restoration of the quality the system and/or regulated waters.

(g) If the owner and/or person responsible for a violation fail to take corrective action approved by the Director, the city has the right to take remedial action as provided in this article. In addition to such remedies, the owner and/or person responsible for the illegal discharge or illegal connection shall reimburse all costs incurred by the city in taking such actions and satisfy all liens imposed for the remedial action.

Sec. 18-91. Enforcement and penalties.

(a) This article may be enforced by any method prescribed by law, including injunctive relief and the provisions of Chapter 162, Florida Statutes. The director may issue an administrative order to any person to immediately cease any activity in violation of this article, any applicable law, regulation or permit.

(b) If the owner fails to remedy the violation within the time allotted causing the city to perform or cause to be performed the work necessary to remedy the violation, the city shall bill the owner the city's cost of bringing the real property into compliance. The aforesaid costs shall include all costs to the city, including direct salary, salary overhead (fringe benefits), inspection costs, administration costs, billing costs and penalties. If the owner fails to pay this bill within 30 days of mailing of said bill, the city shall then assess the total amount of costs against the real property improved. Said assessment shall constitute a lien as any special assessment on the property and shall bear the maximum interest rate as permitted by law. In the event that such lien is not paid, the city may enforce and collect such lien as the collection and enforcement of any special improvement liens as provided by this code or the laws of Florida.

(c) If a violation of this article is continued, each day of such violation shall constitute a separate offense.

Sec. 18-92. Construction sites and construction activities.

Construction sites and operations shall be required to maintain during and after all construction, development, excavation and/or alteration operations, structural and non-structural BMPs with the intent to reduce pollutants and sediment in stormwater runoff.

(a) Construction and operations site plans and permits shall be required and reviewed by the city prior to the initiation of construction operations. Site plans shall include descriptions of structures, procedures, and or control measures designed to reduce and control sediment and pollutant loading either directly or indirectly to stormwater runoff.

(b) Construction or construction operations over any existing or planned stormwater management system or any such operations causing interference with any stormwater management system shall not be permitted.

(c) A schedule of inspections for monitoring shall be developed to be carried out during and after the construction and operation phases as conditions to the permit to determine and verify compliance with this section.

Sec. 18-93. Industrial sites and industrial activities.

Industrial sites and industrial activities determined by the city to contribute pollutant loadings to stormwater and/or the system shall be inspected and monitored by the city in order to verify compliance with this section.

(a) It shall be unlawful to deposit, spill, dump, or introduce any significant material or pollutants that may contribute contamination to any surface

area, stormwater, system, and/or stormwater runoff. It shall be unlawful to deposit, spill, dump or introduce:

(1) Substances that settle to form sludge deposits.
(2) Floatable or suspended substances such as debris, oil, scum, and other materials.
(3) Any significant substance, petroleum product, infectious matter, toxic or hazardous substance or hazardous material onto surface areas or to stormwater management systems.
(4) Industrial wastewater, domestic, cooling or any other wastewater into any area designated to carry stormwater without prior city approval.

(b) Any site and or activity identified as contributing any significant material and or pollutants shall be required:

(1) To develop and initiate structural systems and or non-structural management practices designed to reduce and control the contribution or pollutants to stormwater, surface areas and/or to the system.
(2) To be inspected and monitored by the city in order to verify compliance with this section.

Sec. 18-94. Site runoff control.

Operations of any dump site shall be conducted to provide for collection, control and treatment of surface runoff and verification that no significant pollutant contribution to receiving waters shall occur upon discharge of said runoff.

Sec 18-95. Alterations or obstructions to stormwater management.

Alterations or obstructions to any stormwater management system, including pump stations, sewer lines, structural controls, catch basins, culverts, wetlands or swales shall be prohibited without prior written approval of the city.

Sec. 18-96. Herbicide, pesticide, fertilizer applications.

Companies involved in the application of herbicides, pesticides, fertilizers, or any regulated material shall be required to adhere to the city's Fertilizer Friendly Use Regulations Ordinance with the intent of minimizing or preventing over application and spills and develop plans for spill response and spill control of said materials.

Sec. 18-97. Storage Tanks.

The discharge of hazardous and or significant materials from storage tank facilities to ground or surface waters, to surface areas, to ground waters during

remediation activities, to stormwater runoff, and/or to any stormwater systems shall be prohibited.

Sec. 18-98. Backwash Disposal.

The disposal of filter backwash water to stormwater management systems shall be prohibited. Disposal of backwash shall provide for separation before final disposal to:

(a) Irrigation of pervious surface areas where sufficient pervious area exists, remote from water supply wells, disposal systems, pits, and septic tanks.
(b) Concentrate Disposal Deep Injection Well.
(c) Sanitary sewers after prior written approval by the city.

Sec. 18-99. Litter, littering material.

The accumulation, placing, sweeping, scattering, throwing, or dumping of litter, or littering material such as dead plants, yard clippings, stagnant water, rubbish, debris, trash, including any wrecked derelict or partially dismantled motor vehicle, trailer, boats, machinery, appliances, furniture or similar article, or any unsanitary, hazardous or significant material upon any surface area, stormwater system or water body within the city is hereby prohibited.

Sec. 18-100. Stormwater interagency agreements and stormwater programs.

The city is authorized to develop interagency agreements and mutually compatible programs with the South Florida Water Management District, Florida Department of Transportation, all other local governmental agencies, and all private agencies; with the intent to control the contribution of pollutants within inter-system stormwater management system linkages; in order to develop mutually compatible stormwater management programs and systems; and, to develop and enforce stormwater management, inspections, and monitoring programs.

Sec. 18-101. Determination of compliance or non-compliance.

The city shall be granted the authority to determine the compliance or non-compliance with this article based on investigation, surveillance, monitoring, sampling, testing, and or sound engineering and operational evaluations; and, as required in any applicable violation hearing or process.

Sec. 18-102. Effluent standards and water quality criteria.

The city adopts the criteria set forth in section 62-302, Florida Administrative Code, “Surface Water Quality Standards”, as amended from time to time, as the

minimum surface water criteria and effluent standards for discharges to surface water.

Sec. 18-103. On site drainage.

Prior to the issuance of a building permit for construction on property, a site drainage plan and drainage computations shall be submitted for approval by the director or designee. The drainage plan must indicate facilities which will totally contain on-site a three-year one-hour storm event and such facilities must be constructed prior to final inspection by the city.

ARTICLE VIII. ELECTRIC UTILITY

Reserved.

Section 3. Section 2-10 of the city's code, "Lien of utility service charge" is amended in its entirety to read:

As set forth herein, the city shall have liens on all lands or premises served by the city's utility systems and as otherwise provided in the code or by resolution.

Section 4. Article I, "Use of Stormwater System", of Chapter 12, "Health and Sanitation" of the city's code, is deleted in its entirety.

Section 5. Severability. If any section, subsection, sentence, clause, phrase or portion of this Ordinance is for any reason held invalid or unconstitutional by any court of competent jurisdiction, such portion shall be deemed a separate, distinct, and independent provision, and such holding shall not affect the validity of the remaining portions thereof.

Section 6. Repeal of Laws in Conflict. All ordinances, resolutions or parts of ordinances or resolutions in conflict herewith are hereby repealed to the extent of such conflict; provided that, all ordinances, resolutions or parts thereof as they pertain to the electric utility system shall remain in full force and effect.

Section 7. Codification. The sections of the ordinance may be made a part of the City code of ordinances and may be re-numbered or re-lettered to accomplish such, and the words "ordinance", "chapter", "article", "section", or "division", may be changed as appropriate.

Section 8. Effective Date. This ordinance shall take effect ten (10) days after adoption.

The passage of this Ordinance on first reading was moved by Vice Mayor Maxwell, seconded by Commissioner Amoroso, and upon being put to a vote, the vote was as follows:

Mayor Pam Triolo	AYE
Vice Mayor Scott Maxwell	AYE
Commissioner Christopher McVoy	AYE
Commissioner Andy Amoroso	AYE
Commissioner John Szerdi	AYE

The Mayor thereupon declared this Ordinance duly passed on first reading on the 3rd day of February, 2015.

The passage of this Ordinance on second reading was moved by Commissioner _____, seconded by Commissioner _____, and upon being put to a vote, the vote was as follows:

Mayor Pam Triolo
Vice Mayor Scott Maxwell
Commissioner Christopher McVoy
Commissioner Andy Amoroso
Commissioner John Szerdi

The Mayor thereupon declared this Ordinance duly passed and enacted on the 17th day of February, 2015.

LAKE WORTH CITY COMMISSION

By:_____
Pam Triolo, Mayor

ATTEST:

_____
Pamela J. Lopez, City Clerk

CITY OF LAKE WORTH

7 North Dixie Highway · Lake Worth, Florida 33460 · Phone: 561-586-1600· Fax: 561-586-1750

AGENDA DATE: February 17, 2015, Regular Meeting **DEPARTMENT:** Public Services

---

EXECUTIVE BRIEF

TITLE:
Update on the newly modified 7th Avenue South between A and F Streets improvement design

SUMMARY:

This item is to provide the Commission with an update on a modified design as a result of a meeting between staff and residents.

BACKGROUND AND JUSTIFICATION:
Back in 2014, the City Commission (and subsequently the County) approved moving forward with a 7th Avenue South Community Development Block Grant (CDBG) project. This improvement project would stretch from South A Street to South F Street. The original typical section (attachment 1) entailed converting the existing unimproved shell rock right-of-way into a residential roadway consisting of two 11' wide drive lanes, sidewalks, two 4' wide bicycle lanes, drainage improvements, water main upgrades for water pressure and fire hydrant coverage, and the addition of stop signs and pavement striping.

After bringing this forward, some residents in the area where displeased with the proposed typical section. The main concern was the large addition of hardscape and potential for increased traffic in the area. Public Services then arranged an onsite meeting on November 6th with City residents to discuss the project, which took place on 7th Avenue South between A Street and B Street. Following this meeting, staff went back to the engineer of record for the project and requested a modification to the original typical section. Staff feels this new section (attachment 2) displays a good compromise: what was once a two way street with sidewalk on both the north and south has been changed to a one way street headed westbound with only a meandering multi-use path on the north side. Addressing resident concerns, this design adds more green space and restricts traffic to west bound only. It also addresses City staff goals of drainage improvement as well as beautification.

MOTION:
No motion required.

ATTACHMENT(S):
7th Ave Typical Section – Original
7th Ave Typical Section – Updated
7th Ave Aerial

EXISTING 7TH AVE. S. – B ST. TO C ST.

TYP. EXISTING 7TH AVE. S. – LOOKING EAST

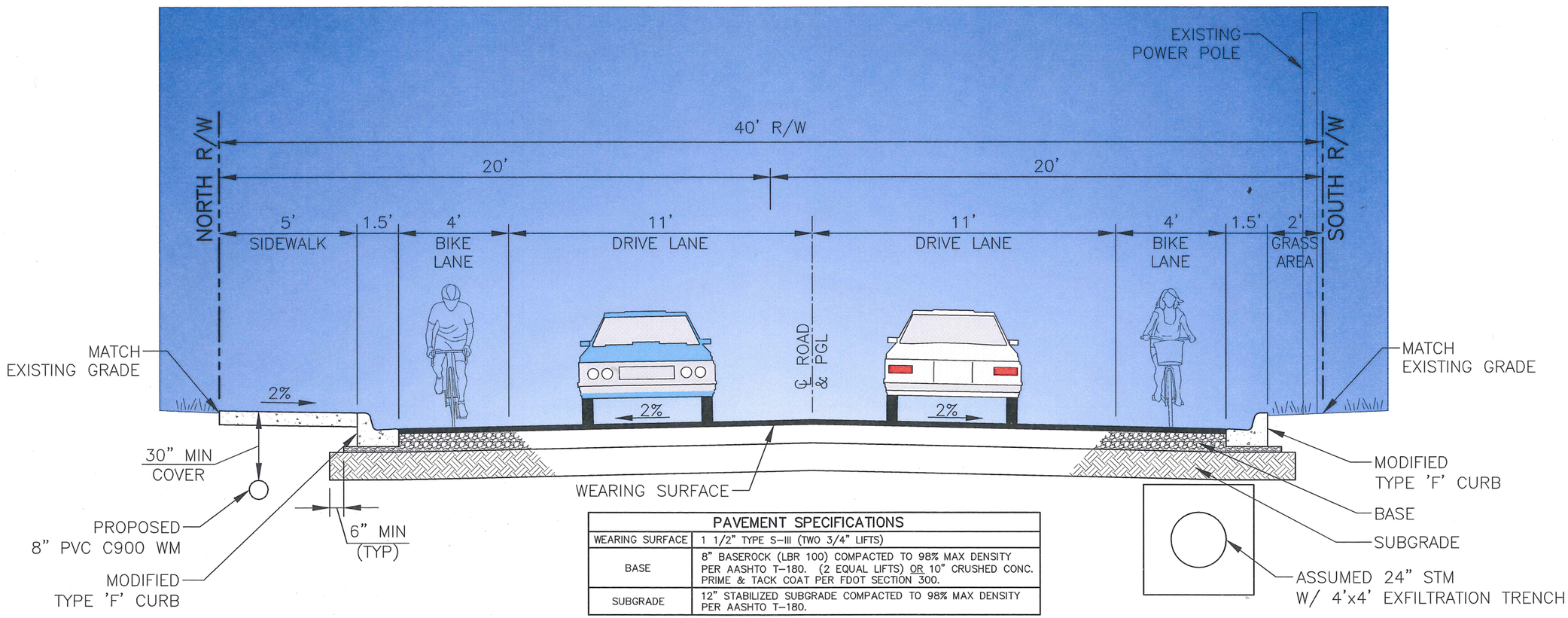

PAVEMENT SPECIFICATIONS	
WEARING SURFACE	1 1/2" TYPE S-III (TWO 3/4" LIFTS)
BASE	8" BASEROCK (LBR 100) COMPACTED TO 98% MAX DENSITY PER AASHTO T-180. (2 EQUAL LIFTS) OR 10" CRUSHED CONC. PRIME & TACK COAT PER FDOT SECTION 300.
SUBGRADE	12" STABILIZED SUBGRADE COMPACTED TO 98% MAX DENSITY PER AASHTO T-180.

PROPOSED 7TH AVENUE SOUTH TYPICAL ROADWAY SECTION

SCALE: NTS

PRELIMINARY

NO.	DATE	ISSUED FOR	APRV'D BY

DESIGNED: M.R.T.
DRAWN: J.A.J.
CHECKED: D.L.M./A.C.
APPROVED: D.L.M.

M. REBECCA TRAVIS, P.E.
No. 40988

MATHEWS CONSULTING
CIVIL ENGINEERS
477 S. Rosemary Avenue, Suite 330, West Palm Beach, Florida 33401
Phone: 561-655-6175 ● Fax: 561-655-6179
www.mathewsconsultinginc.com EB-0007929

VERIFY SCALE
1"
BAR IS ONE INCH ON FULL SIZE (22x34) ORIGINAL DRAWING. ADJUST SCALES AS NECESSARY.

CITY OF LAKE WORTH 7TH AVENUE SOUTH (SOUTH "A" STREET TO SOUTH "F" STREET) ROADWAY IMPROVEMENTS PROJECT

7TH AVENUE SOUTH TYPICAL SECTION – OPTION 3

DATE: MARCH 2014
SHEET:
DRAWING:

Date\Time : Thu, 03 Apr 2014 – 8:47am Current Plotstyle : ByColor Layout Tab: Option 3
Path\Name : S:\Projects\LakeWorth\1738 7th Avenue\CAD\Preliminary Design Sections\SECTIONS.dwg
Acad Version : R18.2s (LMS Tech)
User Name : jjenkins

-DRAFT-

TYP. EXISTING 7TH AVE. S. – LOOKING EAST

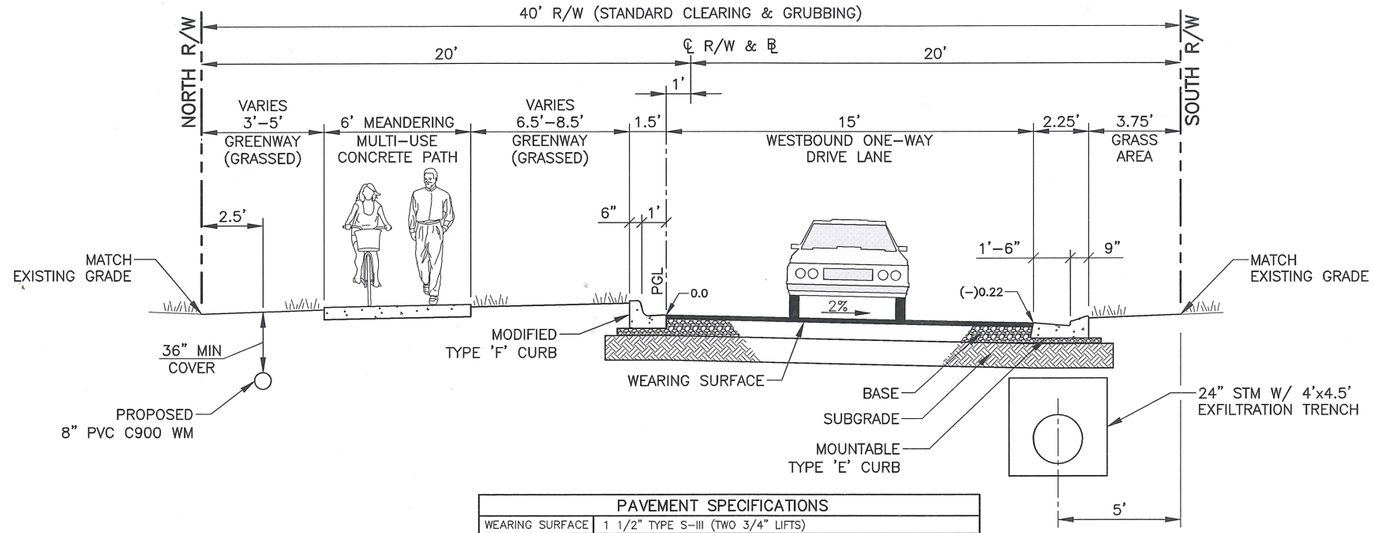

PAVEMENT SPECIFICATIONS	
WEARING SURFACE	1 1/2" TYPE S–III (TWO 3/4" LIFTS)
BASE	8" BASEROCK (LBR 100) COMPACTED TO 98% MAX DENSITY PER AASHTO T–180. (2 EQUAL LIFTS) OR 10" CRUSHED CONC. PRIME & TACK COAT PER FDOT SECTION 300.
SUBGRADE	12" STABILIZED SUBGRADE COMPACTED TO 98% MAX DENSITY PER AASHTO T–180.

7TH AVENUE SOUTH TYPICAL SECTION ONE WAY W/ MULTI–USE PATH
S 'A' ST TO S 'B' ST AND S 'C' ST TO S 'F' ST

SCALE: NTS

EXISTING 7TH AVE. S. – B ST. TO C ST.

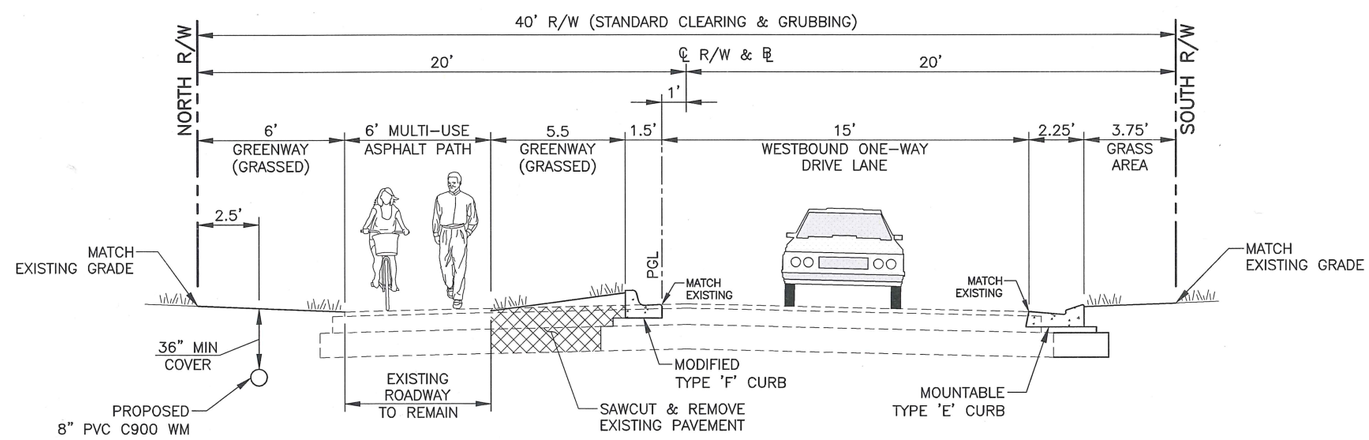

7TH AVENUE SOUTH TYPICAL SECTION
S 'B' ST TO S 'C' ST

SCALE: NTS

Date\Time : Wed, 14 Jan 2015 – 8:08am Current Plotstyle : ByColor Layout Tab: 1
Path\Name : S:\Projects\LakeWorth\1738 7th Avenue\CAD\Preliminary Design Sections\1738SECTIONS.dwg
Acad Version : R19.0s (LMS Tech)
User Name : jjenkins

NO.	DATE	ISSUED FOR	APRV'D BY

DESIGNED: M.R.T.
DRAWN: J.A.J.
CHECKED: D.L.M./A.C.
APPROVED: D.L.M.

MATHEWS CONSULTING
CIVIL ENGINEERS
477 S. Rosemary Avenue, Suite 330, West Palm Beach, Florida 33401
Phone: 561-655-6175 ● Fax: 561-655-6179
www.mathewsconsultinginc.com EB-0007929

VERIFY SCALE
1"
BAR IS ONE INCH ON FULL SIZE (22x34) ORIGINAL DRAWING. ADJUST SCALES AS NECESSARY.

ENGINEER NO.: 1738
CLIENT PROJECT NO.:
CAD REF.: 1738SECTIONS

CITY OF LAKE WORTH
7TH AVENUE SOUTH
ROADWAY IMPROVEMENTS PROJECT

TYPICAL ROADWAY SECTIONS

DATE: JANUARY 2015
SHEET:
DRAWING:

7th Ave South - improvements include full road construction, sidewalks, swale area, curb and gutter, and signage/striping
Proposed 8" water main
6th Ave S
7th Ave S
8th Ave S
S A St
S B St
S C St
S D St
S E St
S G St
SE Coast St
© 2013 Google
Google earth
Imagery Date: 3/21/2011 26°36'27.60" N 80°03'44.75" W elev 19 ft eye alt 1749 ft

CITY OF LAKE WORTH

7 North Dixie Highway · Lake Worth, Florida 33460 · Phone: 561-586-1600· Fax: 561-586-1750

AGENDA DATE: February 17, 2015, Regular Meeting **DEPARTMENT:** Water Utilities

---

EXECUTIVE BRIEF

TITLE:
Resolution No. 08-2015 - establish water and sewer utility fees and charges to be effective April 1, 2015

SUMMARY:
This Resolution establishes the Water and Sewer Utility Fees and Charges, to be effective April 1, 2015. These fees and charges will be incorporated in the City's consolidated Fees and Charges when they are updated. This resolution does not change the Water or Sewer rates previously approved for Fiscal Year 2014-2015.

BACKGROUND AND JUSTIFICATION:
The City of Lake Worth has developed a consolidated listing of fees and charges that consolidates fees and charges previously required by many documents. This Resolution establishes consolidated Fees and Charges for the Water and Sewer Utility Department, which are consistent with the regulatory and administrative requirements contained in the Policies and Procedures Manual – Water (PPM-W). These Fees are in addition to Fees and Charges established for Electric Utilities and Customer Services.

MOTION:
I move to approve/not approve Resolution No. 08-2015 establishing Water and Sewer Fees and Charges to be effective April 1, 2015.

ATTACHMENT(S):
Fiscal Impact Analysis – Not Applicable
Resolution

RESOLUTION NO. 08-2015 OF THE CITY OF LAKE WORTH, FLORIDA, PROVIDING FOR ADDITIONAL FEES AND CHARGES FOR USE OF WATER SYSTEM AND SEWAGE SYSTEM OF THE CITY OF LAKE WORTH; PROVIDING FOR SEVERABILITY; PROVIDING FOR THE REPEAL OF CONFLICTING RESOLUTIONS OR PARTS OF RESOLUTIONS; AND PROVIDING AN EFFECTIVE DATE.

WHEREAS, the City of Lake Worth, Florida, is authorized and required to fix uniform and adequate fees and charges for its service; and

WHEREAS, the City Commission adopted a comprehensive fee and charges structure for Fiscal Year 2014-2015, per Resolution 56-2014; and

WHEREAS, an evaluation of the fees and charges for the water system and sewer system establishes a need to consolidate and revise the fees and charges as set forth herein in order to meet the objectives of the City.

NOW, THEREFORE, BE IT RESOLVED BY THE CITY COMMISSION OF THE CITY OF LAKE WORTH, FLORIDA, that:

Section 1. The foregoing recitals are incorporated into this Resolution as true and correct statements.

Section 2. The schedule of fees and charges for the 2014-2015 fiscal year which is attached hereto as Exhibit “A” and incorporated herein is hereby adopted.

Section 3. Except as revised herein all other fees and charges adopted by the City remain unchanged.

Section 4. All Resolutions or parts of Resolutions in conflict herewith are hereby repealed.

Section 5. If any provision of this resolution or the application thereof to any person or circumstances is held invalid, the invalidity shall not affect other provisions or applications of this Resolution which can be given effect without the invalid provision or application and to this end the provisions of this Resolution are declared severable.

Section 6. This Resolution shall take effect upon adoption.

The passage of this Resolution was moved by Commissioner _____, seconded by Commissioner _____, and upon being put to a vote, the vote was as follows:

Mayor Pam Triolo
Vice Mayor Scott Maxwell
Commissioner Christopher McVoy
Commissioner Andy Amoroso
Commissioner John Szerdi

The Mayor thereupon declared this Resolution duly passed and adopted on this 17th day of February, 2015.

LAKE WORTH CITY COMMISSION

By:_____
Pam Triolo, Mayor

ATTEST:

_____
Pamela J. Lopez, City Clerk

70 Exhibit A
71

EXHIBIT C

SCHEDULE OF FEES AND CHARGES FOR SERVICES

Originating Department	Description of Services Provided	Fees ($)		
WATER UTILITY		Resident	Non-Resident	Deposit
Building Department	**1. Reserved Capacity Charges:** These fees are paid to the building department at the time of building permit issuance. Equivalent Residential Unit (ERU) shall be defined in accordance with the WUPP.[1]			
	Water Capacity Charge: per ERU	$ 3,416.00		
	Sewer Capacity Charge: per ERU	$ 2,650.00		

Meter Size	# of ERUs
5/8 x 3/4"	1
1"	2.5
1½"	5
2"	8
3"	16
4"	25
6"	50

Customer Services	**2A. Meter Set and Tap Fees:** These fees are paid to Customer Service at the time of a meter application.			

Meter Size	Meter Set Only	Tap and Meter Set
¾"	$241.50	$1,360.00
1"	$336.00	$1,486.00
1½"	$546.00	$2,226.00
2"	$788.00	$2,473.00

New	**2B. Additional Connection Fee** (Installation of water main to property in City)	$ 4,000		
	2C. Cancellation Fee:	$25.00 minimum or actual expense		
Fees Changed	**3A. Sanitary sewer lateral and tap Fee:**	$ 2,500		
New	**3B. Additional Connection Fee** (Installation of sewer to property in City)	$ 6,000		
	4. Temporary Hydrant Meter: Deposit	$ -	$ -	$525.00
	Activation Fee	$ 35.00		
	Application Fee	$ 17.00		
	Minimum Charge per month	$ 68.00		

Footnote / Explanation	
W.U.P.P[1]	Water Utility Policy and Procedures.
	Additional connection fee for installation of water main or sewer to property within three (3) years of connection.
	Additional connection fee may be paid over ten (10) years as an addition to the monthly bill.
	Reserved capacity fees for connection of existing buildings to water & sewer service may be paid over (10) years as an addition to the monthly bill.
	All fees and charges are re-statements or in addition to existing Utilities fees and charges.

72
73

EXHIBIT C

SCHEDULE OF FEES AND CHARGES FOR SERVICES

Originating Department	Description of Services Provided	Fees ($)		
WATER UTILITY	**Continued**	**Resident**	**Non-Resident**	**Deposit**
Customer Services	5. Backflow Device Administrative Fee, per year	$ 25.00		
	6. Backflow Device Tester Registration Fee	$ 50.00		
	7. Cross connection involving a private water system, which is a health hazard, per day.	$ 1,000.00		
	8. Cross connection involving a private water system, which is not a health hazard, per day.	$ 500.00		
	9. Failing to test or maintain backflow prevention assemblies, as required, per violation.	$ 500.00		
	10. Unmetered Fire Line Inspection Charge, prior to operation.	$ 210.00		
Fees Changed	11. Industrial Pretreatment permit application and renewal fee, per year.	$ 500.00		
	12. Industrial Pretreatment waste surcharge fee (IWS), per month IWS = 8.34 (V)($X(BOD-400)+$Y(TSS-400)+$Z(FOG-100)) IWS = monthly industrial surcharge rate, $ V = volume of industrial flow per month in million gallons, based on metered water X, Y, Z = Excess Costs per pound of stated Pollutants X = $0.40/lb Y = $0.40/lb Z = $7.30/lb	Formula Driven Charge		

Footnote / Explanation	
B.O.D	Biological Oxygen Demand in mg/l
T.S.S	Total Suspended Solids in mg/l
F.O.G	Fats, Oils and Grease in mg/l

74
75

EXHIBIT C

SCHEDULE OF FEES AND CHARGES FOR SERVICES

Originating Department	Description of Services Provided	Fees ($)		
WATER UTILITY	Continued	Resident	Non-Resident	Deposit
Customer Services will collect on bill	13. Industrial Discharger Enforcement Fines:			
New	(a) Failure to comply with 24 hour notification, per occurrence	100.00		
New	(b) Failure to comply with Notice of Violation (NOV), per occurrence	150.00		
New	(c) Continued failure to comply with NOV after 60 days, monthly	500.00		
New	(d) Notice of significant violation (NOSV), per occurrence	500.00		
New	(e) Continued failure to comply with (NSOV) after 60 days, monthly	1,000.00		
New	(f) Notice of monthly fine (NMF), monthly	2,000.00		
Customer Services	14. Fats, Oils and Grease Permit Application and Renewal Fee, per year.	$ 100.00		
	15. Fats, Oils and Grease waste surcharge fee (FOG), per month	$ 100.00		
	16. Water and Sewer Utility Site Plan Review Fee			
	0 - 2 Acres	$ 200.00		
	3 - 10 Acres	$ 400.00		
	> 10 Acres	$ 600.00		
	17. Annual private sewer system inspection fee			
Fees changed	Septic Tank and Drain Field	$ -	Out	
	Gravity sewer system, per manhole	$ 25.00		
	Private Lift Station	$ 100.00		
	18. Lake Worth Bottled Water, 500 ml bottles, per case	$ 15.00		

Footnote / Explanation

CITY OF LAKE WORTH

7 North Dixie Highway · Lake Worth, Florida 33460 · Phone: 561-586-1600· Fax: 561-586-1750

AGENDA DATE: February 17, 2015, Regular Meeting **DEPARTMENT:** Water Utilities

---

EXECUTIVE BRIEF

TITLE:
Resolution No. 09-2015 - regulatory and administrative requirements in the Policies and Procedures Manual - Water Utilities Department

SUMMARY:
The Resolution approves the regulatory and administrative requirements included in the Policies and Procedures Manual – Water Utilities Department (PPM-W).

BACKGROUND AND JUSTIFICATION:
The Policies and Procedures Manual (PPM-W) consolidates and updates the administrative and regulatory requirements for the Water and Sewer Utility functions, which supplements the legal requirements included in the revised Ordinance, Chapter 18, "Utilities". The PPM-W is a compilation of procedures and requirements contained in various documents over the years, and already followed by the department. The PPM-W contains changes in requirements described in the attached presentation provided to the City Commission in a workshop on December 9, 2014. The PPM-W references and includes standard work processes and standard operating procedures for work done by the department.

MOTION:
I move to approve/not approve Resolution No. 09-2015 approving the Policies and Procedures Manual – Water Utilities Department.

ATTACHMENT(S):
Fiscal Impact Analysis – Not Applicable
Resolution
Policies and Procedures Manual - Water Utilities
Commission presentation dated December 9, 2014

RESOLUTION NO. 09-2015 OF THE CITY OF LAKE WORTH, FLORIDA, APPROVING THE POLICIES AND PROCEDURES MANUAL – WATER UTILITIES DEPARTMENT (PPM-W), WHICH PROVIDES REGULATORY AND ADMINISTRATIVE REQUIREMENTS FOR THE WATER AND SEWER UTILITY SYSTEMS; PROVIDING FOR SEVERABILITY; PROVIDING FOR THE REPEAL OF CONFLICTING RESOLUTIONS OR PARTS OF RESOLUTIONS; AND PROVIDING AN EFFECTIVE DATE.

WHEREAS, the City of Lake Worth, Florida, is authorized to own and operate a water and sewer utility system; and

WHEREAS, the City Commission adopted Ordinance 2015-03, approving a new Chapter 18, “Utilities” and authorizing the adoption of Policies and Procedures Manuals to set forth administrative and regulatory requirements of those utilities; and

WHEREAS, administrative and regulatory requirements for the water system and sewer system need to be consolidated and updated to provide better administration of the water system and sewer system for the benefit of the public and to meet the objectives of the City.

NOW, THEREFORE, BE IT RESOLVED BY THE CITY COMMISSION OF THE CITY OF LAKE WORTH, FLORIDA, that:

Section 1. The foregoing recitals are incorporated into this Resolution as true and correct statements.

Section 2. The Policies and Procedures Manual – Water Utilities (PPM-W) which is attached hereto and incorporated herein is hereby adopted.

Section 4. All Resolutions or parts of Resolutions in conflict herewith are hereby repealed.

Section 5. If any provision of this resolution or the application thereof to any person or circumstances is held invalid, the invalidity shall not affect other provisions or applications of this Resolution which can be given effect without the invalid provision or application and to this end the provisions of this Resolution are declared severable.

Section 6. This Resolution shall take effect upon adoption.

The passage of this Resolution was moved by Commissioner _____, seconded by Commissioner _____, and upon being put to a vote, the vote was as follows:

Mayor Pam Triolo
Vice Mayor Scott Maxwell
Commissioner Christopher McVoy
Commissioner Andy Amoroso
Commissioner John Szerdi

The Mayor thereupon declared this Resolution duly passed and adopted on this 17th day of February, 2015.

LAKE WORTH CITY COMMISSION

By: _____
Pam Triolo, Mayor

ATTEST:

_____
Pamela J. Lopez, City Clerk

Exhibit A to Resolution No. 09-2015

CITY OF LAKE WORTH

WATER UTILITIES DEPARTMENT

POLICIES AND PROCEDURES MANUAL

CITY OF LAKE WORTH

POLICIES AND PROCEDURES MANUAL
WATER UTILITIES DEPARTMENT

TABLE OF CONTENTS:

CHAPTER 1 - OVERVIEW AND DEFINITIONS

CHAPTER 2 – EXTENSIONS, REPLACEMENTS AND ADDITIONS

CHAPTER 3 – SEWER CONNECTIONS

CHAPTER 4 – APPLICATION FOR SERVICE AND BILLING

CHAPTER 5 – RATES

CHAPTER 6 – DEPOSITS, CHARGES, FEES AND PENALTIES

CHAPTER 7 – RESERVE CAPACITY CHARGES

CHAPTER 8 – POTABLE WATER

CHAPTER 9 – CROSS-CONNECTION CONTROL (BACKFLOW)

CHAPTER 10 – WATER CONSERVATION

CHAPTER 11 – WATER USE RESTRICTIONS

CHAPTER 12 – WASTEWATER (SANITARY SEWER)

CHAPTER 13 – INDUSTRIAL PRETREATMENT PROGRAM

CHAPTER 14 – FATS, OILS AND GREASE

CHAPTER 15 – PRIVATE WASTEWATER SYSTEMS

CITY OF LAKE WORTH

POLICIES AND PROCEDURES MANUAL
WATER UTILITIES DEPARTMENT

CHAPTER 1 - OVERVIEW AND DEFINITIONS

1.1 PURPOSE

The purpose of this Water Utilities Department Policies and Procedures Manual (PPM-W) is to establish uniform and non-discriminatory policies, procedures, standards, and utility fees for the proper administration of the City of Lake Worth Water and Sewer Utilities Department (Department). The Department will, at all times, conduct itself in accordance with the intent of this PPM-W. The City, through its Department provides potable water and wastewater service on a uniform and non-discriminatory basis. The Department works with and uses services from the Electric Utility Department for Customer Service, water meter reading, billing, revenue collection and revenue protection. These services are governed by the policies and procedures of the Electric Utility Department, as supplemented by these procedures. The Department is a subordinate entity of the City, governed by and with policies established by the Mayor and City Commissioners.

1.2 DEPARTMENT WORK PROCESSES

The Department has established typical work processes as guides for various work functions. These work processes are attached and made part of this PPM-W. The Department shall use the work processes as guides for work done and interfaces with other organizations, to the extent that the coordination is practical.

1.3 STANDARD OPERATING PROCEDURES

The Department shall maintain and upgrade as necessary, internal standard operating procedures that describe the expected procedures needed to efficiently and safely perform necessary functions within each organization. These Standard Operating Procedures shall be maintained with a hard copy in the organization and a copy in the Administration Division. Such Standard Operating Procedures shall be considered part of this PPM-W. Revisions of the Standard Operating Procedures shall be approved by the Director.

1.4 VALIDITY

The policies and the procedures specified herein supersede and replace any prior policies, procedures, regulations, etc., governing provision of utility service unless such prior specification is protected by valid agreement or otherwise protected by law or action of the City Commission. In the event that a portion of this PPM-W manual is declared unconstitutional or void for any reason by any court of competent jurisdiction, such decision shall in no way affect the validity of the remaining portions of this PPM-W.

1.5 REVIEW OF POLICIES AND PROCEDURES MANUAL

The Department shall periodically review this PPM-W to evaluate the adequacy of its provisions. Revisions must be reviewed by the Water Utilities Department Director and the City Manager prior to implementation and dissemination, except as may be authorized as a ministerial responsibility. Changes to Rates and Fees shall be approved by resolution of the City Commission.

1.6 MINISTERIAL RESPONSIBILITIES AUTHORIZED

The City Commission hereby delegates and authorizes the Department Director to perform those functions necessary to properly conduct the business of the Department in conformance with the policies, procedures, and regulations set forth in this PPM-W manual, as well as under applicable law and regulation. Such functions include, but are not limited to, the ability to execute Standard Potable Water Development Agreements, Standard Wastewater Development Agreements, indemnity agreements, easements, deeds, liens, permits, renewal agreements, permit agreements, and such other documents as are necessary and ordinary for carrying out the day-to-day activities of the Department. Lien satisfactions may be executed by the Department Director or their designee. In addition, the City Manager, with the concurrence of the City Attorney's Office, may enter into regulatory resolution letter agreements with the Florida Department of Environmental Protection (FDEP) to settle outstanding regulatory matters. The value of agreements entered into pursuant to this delegation shall not exceed twenty-five thousand dollars ($25,000) per agreement. The Department Director may also include additional conditions in Standard Potable Water Development Agreements and Standard Wastewater Development Agreements, provided they are of a ministerial nature or are specifically authorized under the existing provisions of the PPM-W. Authorized ministerial functions further include interpretation of applicability and the ability to implement corrections to the PPM-W and accompanying documents when minor in nature and not otherwise legally requiring an action of the City Commissioners for implementation. Consistent implementing procedures may also be adopted by the Department without further approval.

1.7 Definitions.

Act or The Act: The Federal Water Pollution Control Act, also known as the Clean Water Act, as amended, 33 U.S.C. 1251 et seq.

Address: The house number of a physical location of a specific property. This excludes post office box numbers. If a lot number in a mobile home park or similar community is used by the U.S. Postal Service to determine a delivery location, the lot number shall be the property's address.

Administrator: The administrator of the U.S. Environmental Protection Agency or his/her duly authorized representative.

Air-gap: The unobstructed vertical distance through the free atmosphere between the lowest opening from any pipe or faucet supplying water to a tank, plumbing fixture, or other device and the flood level rim of such vessel. An approved air-gap shall be at least double the diameter of the supply pipe; measured vertically, above the top of the rim of the vessel and, in no case, less than two inches.

Approval Authority: The Department of Environmental Protection or its successor agencies.

Approved: Accepted by the director of Water Utilities as meeting an applicable specification stated or cited in this section, or as suited for the proposed use.

ASTM - American Society for Testing and Materials.

Authorized Representative: A principal executive officer of at least the level of vice president if the industrial user is a corporation, a general partner or proprietor if the industrial user is a partnership or sole proprietorship, or an individual if such representative is responsible for the overall operation of the facility.

Auxiliary water supply: Any water supply on, or available to, the premises other than the purveyor's approved public potable water supply.

Backflow: The flow of water or other liquid, mixture or substance under pressure into the distributing pipes of a potable water supply system from any source or sources other than its intended source.

Backflow preventer: A device or means designated to prevent backflow or back-siphonage.

Back-Siphonage: The flow of water or other liquid, mixture or substance into the distributing pipes of a potable water supply stream from any source other than its intended source caused by the sudden reduction of pressure in the potable water supply system.

Biochemical Oxygen Demand (BOD): The quantity of oxygen utilized in the biochemical oxidation of organic matter under standard laboratory procedure in five days at 20°C, expressed in milligrams per liter (mg/1).

Building: Any structure, either temporary or permanent, built for the support, shelter or enclosure of persons, chattels or property of any kind, or any other improvement, use, or structure which creates or increases the potential demand on the water and wastewater utility systems operated by the City of Lake Worth. This term shall include trailers, mobile homes, or any vehicle serving in any way the function of a building. This term shall not include temporary construction sheds or trailers erected to assist in construction and maintained during the term of a Building Permit.

Building Drain: That part of the piping of a building which collects wastewater inside the walls of the building and conveys it to outside the building wall.

Building Official: The chief building official designated by the City in the Department of Community Sustainability.

Building Permit: An official document or certificate issued by the authority having jurisdiction, authorizing the construction or siting of any building. For purposes of this section, the term BUILDING PERMIT shall also include a tie-down permit for any structure or building, such as a mobile home, that does not otherwise require a Building Permit in order to be occupied.

Building Sewer. The extension from the building drain to the public sewer or other place of disposal, also called house connection.

Bulk Customers (Large Users): Those public entities/utilities having individual intergovernmental agreements with the city for treatment and disposal of wastewater.

Bypass: The intentional diversion of wastewater streams from any portion of an industrial user's treatment facility.

Categorical Industrial User: An industrial user subject to categorical pretreatment standards.

Categorical Pretreatment Standard: Any regulation containing pollutant discharge limits promulgated by EPA in accordance with Sections 307(b) and (c) of the Act (33 U.S.C. 1317) which applies to a specific category of industrial users and which appear in 40 CFR Chapter I, Subchapter N, Parts 405-471, as amended.

Categorical Pretreatment Standard or Categorical Standard: Any regulation containing pollutant discharge limits promulgated by the EPA in accordance with 33 U.S.C. 1317 which apply to a specific category of users and which appear in Rule 62-660.400(1)(e), F.A.C.

CFR - Code of Federal Regulations.

Chemical Oxygen Demand ("COD"): A measure of the oxygen equivalent of that portion of the organic matter in a water sample that is susceptible to oxidation by a strong chemical oxidant.

City: The City of Lake Worth, Florida, the City Commission, City Manager, or the duly authorized staff, agent or the representative acting on behalf of the City Commission to supervise and manage the operation of the publicly owned water and wastewater facilities.

COD - Chemical Oxygen Demand.

Collection System: Wastewater lines and appurtenances, valves, manholes, pumping stations, and the like, required to collect wastewater from its point of origin and transport it for treatment and disposal.

Commodity Charge: A charge payable by a user based on water consumption.

Consumer: Any party, person, firm, corporation or association that receives and utilizes potable water or wastewater service at a specific location.

Contamination: Any impairment of the quality of potable water by sewage, industrial fluids, waste liquids, compounds, or other materials to a degree which creates a potential actual hazard to the public health through poisoning or through the spread of disease.

Control Authority: The City of West Palm Beach as ECRWRF permit holder acting on behalf of and as agent for the ECRWRF Board.

Cooling Water: The water discharged from a building subsequent to its use for purposes connected with air conditioning, cooling, refrigeration, or for other purposes to which the only pollutant added is heat.

Cross-connection: Any physical connection or arrangement of piping or fixtures between two otherwise separate piping systems, one of which contains potable water and the other nonpotable water or fluids of questionable safety, through which, or because of which, backflow or back-siphonage may occur into the potable water system.

Cross-Connection Control: The installation of an approved backflow prevention device at the water service connection to any customer's premises.

Customer: The person or entity responsible for payment for all potable water or wastewater services used at a specific location, and further defined as that person who has applied for and requested that services be made available at the specific location and has agreed to pay for all usage of such services occurring at the location. The customer and the consumer may be one and the same.

Customer Service: The office within the Electric Utility Department with responsibility for Customer Service, billing and collection of water and sewer utility bills, in conjunction with electric utility bills.

Delinquent: Monies and fees owed to the City, which remain unpaid 30 days after the due date.

DEP - Florida Department of Environmental Protection.

Department: The Water and Sewer Utility Department within the City of Lake Worth, Florida.

Director: The person designated by the city as the Director of the Water and Sewer Utilities Department, whose job it is to supervise the operation of the publicly-owned treatment works, or his/her duly authorized deputy, agent, or representative.

Discharge: Any spilling, leaking, pumping, emitting, emptying or dumping, which causes the introduction of pollutants into a POTW from any nondomestic source regulated under F.S. Ch. 403.

District: The South Florida Water Management District.

Domestic Waste: Any superfluous solid, liquid, or gaseous material derived principally from the use of sanitary conveniences of residences (including apartments); wastewater produced from a noncommercial or nonindustrial source.

Domestic Wastewater: A combination of water-carried wastes which shall not exceed the following concentrations: 250 mg/l BOD, 250 mg/l TSS, 30 mg/l TKN and 15 mg/l phosphorus.

Double Check Valve Assembly: An assembly of two (2) independently operating approved check valves with tightly closing shutoff valves on each side of the check valves, plus properly located test cocks for the testing of each check valve. The entire assembly shall meet the design and performance specifications and approval of a recognized and city-approved testing agency for backflow prevention devices. To be approved, these must be readily accessible for in-line maintenance and testing.

Easement: A grant by the owner of land for a specific use of land by a person or persons, or by the public generally. For the purposes of this chapter, easement means a grant of land by a developer or other party, for the purpose of operating, managing and construction of water and wastewater facilities.

ECRWRF - The East Central Regional Water Reclamation Facility.

Effluent: Wastewater or other liquid, partially or completely treated, or in its natural state, flowing out of a point source, reservoir, basin, treatment plant, or industrial treatment plant, or part thereof.

Environmental Protection Agency (EPA): The United States Environmental Protection Agency or, where appropriate, the term may also be used as a designation for the administrator or other duly authorized official of the agency, or designee of the agency, including the Florida Department of Environmental Protection.

EPA - U.S. Environmental Protection Agency.

Established: Any lawn and landscaping which does not meet the definition of new as defined in this section.

Existing Source: Any source of discharge, the construction or operation of which commenced prior to the publication by EPA of proposed categorical pretreatment standards, which will be applicable to such source if the standard is thereafter promulgated in accordance with 33 U.S.C. 1317.

FAC - Florida Administrative Code.

FBC: Florida Building Code, in effect in Palm Beach County, Florida, as revised from time to time.

FDEP: The State of Florida's Department of Environmental Protection or its successor agency in function.

Floatable Oil: Oil, fat or grease in a physical state such that it will separate by gravity from wastewater by treatment in an approved pretreatment facility.

Flush Toilet: The common sanitary flush commode in general use for the disposal of human excrement.

Force Main: A pipe which carries sewage under pressure.

Garbage: Solid wastes from the domestic and commercial preparation, cooking and dispensing of food, and from the handling, storage, and sale of produce.

Grab Sample: A sample which is taken from a waste stream on a one-time basis with no regard to the flow in the waste stream and without consideration of time.

Hazardous Substance: A substance having radiological, chemical, physical or biological properties that are or could be dangerous to plant, animal or human life, or real property.

Health Officer: The Palm Beach County Public Health Unit Director.

Indirect Discharge: The discharge or introduction of nondomestic pollutants from any source into the municipal wastewater facilities as regulated under 33 U.S.C. 1317, as amended from time to time.

Industrial User: A source of indirect discharge as regulated under 33 U.S.C. 1317, as amended from time to time.

Industrial Waste Surcharge: The charge made for all wastewater over and above normal wastewater charges.

Industrial Wastes: The liquid wastes discharged from industrial manufacturing processes, trades, or businesses and having characteristics different from domestic wastewater.

Industrial Wastewater: Food waste, other waste, or any superfluous solid, liquid, or gaseous material resulting from manufacturing, industrial, or commercial processes, or from natural resource development, recovery, or processing.

Infiltration/Inflow: Ground water and surface water which leaks into the sewers through cracked pipes, joints, manholes or other openings.

Instantaneous Maximum Allowable Discharge Limit: The maximum concentration of a pollutant allowed to be discharged at any time, determined from the analysis of any discrete or composite sample collected, independent of the industrial flow rate and the duration of the sampling event.

Interference: A discharge which, alone or in conjunction with a discharge or discharges from other sources, both:

(1) Inhibits or disrupts the POTW, its treatment processes or operations, or its domestic wastewater residuals processes, use or disposal; and

(2) Is a cause of a violation of any requirement of the POTW's permit (including an increase in the magnitude or duration of a violation) or prevents use or disposal of domestic wastewater residuals in compliance with local regulations or rules of DEP and F.S. Ch. 403.

Irrigation: The outside watering of shrubbery, trees, lawns, grass, ground covers, vines, gardens and other such flora, not intended for resale, which are planted and are situated in such diverse locations as residential and recreation areas, cemeteries, public, commercial and industrial establishments and public medians and rights-of-way.

Irrigation System: A permanent artificial watering system designed to transport and distribute water to plants.

Irrigation System Zone: A division, area or region distinguished from adjacent parts by distinctive features in an irrigation system.

Landscaping: Any combination of living plants (such as grass, ground cover, shrubs, vines or trees) and nonliving material (such as rocks, pebbles, paving materials or fences).

Lawn(s): A usually closely mown plot or area planted with grass or similar plants surrounding a residence, commercial, public, industrial or institutional property.

Lift Station: A small wastewater pumping station that lifts the wastewater to a higher elevation when the continuance of the sewer at reasonable slopes would involve excessive depths of trench, or that raises wastewater from areas too low to drain into available sewers.

Low Volume Irrigation: The use of equipment and devices specifically designed to allow the volume of water delivered to be limited to a level consistent with the water

requirement of the plants being irrigated and designed to allow that water to be placed with a high degree of efficiency within the root zone of the plant; and the low volume irrigation of plants with one hose fitted with a self-canceling or automatic shutoff nozzle, attended by one person.

May - A word that when utilized in this chapter has a permissive meaning.

Medical Waste: Isolation wastes, infectious agents, human blood and blood products, pathological wastes, sharps, body parts, contaminated bedding, surgical wastes, potentially contaminated laboratory wastes, and dialysis wastes.

Meter Installation Charge: The charge for the meter, meter installation, and necessary inspections.

Meter Tampering: when any person shall willfully alter, injure, or knowingly suffer to be injured any water meter, lock or other apparatus or device belonging to the city in such a manner as to cause loss or damage or to prevent any such meter installed from registering the quantity which otherwise would pass through the same; or to alter the index or break the seal of any such meter; or in any way to hinder or interfere with the proper action or just registration of any such meter or device or make or cause to be made any connection of any pipe or appurtenance in such a manner as to use, without the consent of the city, any water or wastewater utility service without such service being reported for payment or such commodity passing through a meter provided by the city and used for measuring and registering the quantity passing through the same.

Meter Test Charge: The charge imposed for the costs of determining the accuracy of the meter.

Mg/l - Milligrams Per Liter.

Month: an interval between successive meter reading dates, which interval may be 30 days, more or less.

Monthly Base Charge: The charge imposed for the availability of the utility from a distribution line, and imposed to defray a portion of the capital costs of construction of the system, maintenance, repairs, and administration.

National Categorical Pretreatment Standard or Pretreatment Standard: Any regulation containing pollutant discharge limits promulgated by the EPA in accordance with the Clean Water Act, as amended from time to time, being 33 U.S.C. 1251 et seq.

Natural Outlet: Any outlet into a watercourse, pond, ditch, lake or other body of surface water or groundwater.

National Pollution Discharge Elimination System or NPDES Permit: A permit issued to the city by the EPA pursuant to Section 402 of the Act (33 U.S.C. 1342).

New: Any lawn or landscaping which has been in existence in the same location for less than 30 days.

New Source:

(1) Any building, structure, facility or installation from which there is or may be a discharge, the construction of which commenced after the publication of proposed pretreatment standards under 33 U.S.C. 1251 et seq., and which will be applicable to such source if the standards are thereafter promulgated in accordance with that section, provided that:

a. The building, structure, facility or installation is constructed at a site at which no other source is located;

b. The building, structure, facility or installation totally replaces the process or production equipment that causes the discharge of pollutants at an existing source; or

c. The production or wastewater generating processes of the building, structure, facility or installation are substantially independent of an existing source at the same site. In determining whether these are substantially independent, factors such as the extent to which the new facility is integrated with the existing plant, and the extent to which the new facility is engaged in the same general type of activity as the existing source shall be considered.

(2) Construction of a new site at which an existing source is located results in a modification rather than a new source if the construction does not create a new building, structure, facility or installation meeting the criteria of (1)(b) or (1)(c) above but otherwise alters, replaces, or adds to existing process or production equipment.

(3) Construction of a new source, as defined in this chapter, has commenced if the owner or operator has:

a. Begun, or caused to begin as part of a continuous on-site construction program:

1. Any placement, assembly, or installation of facilities or equipment; or

2. Significant site preparation work including clearing, excavation, or removal of existing buildings, structures, or facilities which is

necessary for the placement, assembly, or installation of new source facilities or equipment.

b. Entered into a binding contractual obligation for the purchase of facilities or equipment which are intended to be used in its operation within a reasonable time. Options to purchase or contracts which can be terminated or modified without substantial loss, and contracts for feasibility, engineering, and design studies do not constitute a contractual obligation under this section.

Noncontact Cooling Water: Water used for cooling which does not come into direct contact with any raw material, intermediate product, waste product, or finished product.

Normal Wastewater: Wastewater discharged into the sanitary sewers in which the average concentration of total suspended solids and BOD is not more than 250 mg/l, total phosphorus is not more than 15 mg/l, total Kjeldahl nitrogen is not more than 30 mg/l, and total flow is not more than 25,000 gallons per day.

NPDES - National Pollutant Discharge Elimination System.

Oil-Effluent Water Separator: Any tank, box, sump or other container in which any petroleum or product thereof, floating on or entrained or contained in water entering such tank, box, sump or other container, is physically separated and removed from such water prior to outfall, drainage or recovery of such water.

Outfall: The point, location or structure where wastewater or drainage discharges from a sewer, drain or conduit into the receiving waters.

Owner: The person, firm, corporation, association, occupant or tenant having an interest, whether legal or equitable, sole or only partial, in any premises which is, or is about to be, supplied with water by the city and the word “owners” means all interested.

Owner, Tenant or Consumer: Includes executors, administrators, successors and assigns of the party referred to in the covenants and agreements contained in any contract between the water or sewer department and its consumers, and such agreements shall be binding upon and inure to the benefit of the successors, heirs, executors, administrators or assigns of such party. The consumer is considered the owner, as distinguished from a tenant, when the property serviced is recorded or stands of record in his name.

Pass-Through: A discharge which exits the POTW into waters of the state or of the United States in quantities or concentrations which, alone or in conjunction with a discharge or discharges from other sources, is a cause of a violation of any requirement of the POTWs permit (including an increase in the magnitude or duration of a violation).

Pathogens: Any organism capable of causing infection or disease, excluding total coliforms (for such as, bacteria, viruses, protozoans, and the like).

PBCDERM: Palm Beach County Department of Environmental Resources Management.

PBCPHU: Palm Beach County Public Health Unit.

Permit: A permit, including a No Discharge (ND) permit, issued to a POTW in accordance with Chapter 62-620, F.A.C.

Person: Any individual, partnership, co-partnership, firm, company, governmental entity or any other legal entity, or their legal representatives, agents or assigns.

pH: The logarithm (base 10) of the reciprocal of the weight of hydrogen ions in grams per liter of solution.

Point Source: A source generating a specific flow of wastewater which can be categorically defined.

Pollutant: Any dredged spoil, solid, incinerator residue, sewerage, garbage, sewage sludge, munitions, chemical wastes, biological materials, radioactive materials, heat, wrecked or discharged equipment, rock, sand, cellar dirt and industrial, municipal or agricultural wastes discharged into the surface waters or ground waters of the state.

Pollution: The presence of any foreign substance (organic, inorganic or biological) in water which tends to degrade its quality so as to constitute a hazard or impair the usefulness or quality of the water to a degree which does not create an actual hazard to the public health but which does adversely and reasonably affect such waters for domestic use.

POTW - Publicly Owned Treatment Works.

PPM (Volume): Parts per million by volume, or milligrams per liter.

PPM (Weight): Parts per million by weight or milligrams per kilogram.

Premises: Each parcel of land having a building, a premises, or any connection to the utility systems.

Pressure-Type Vacuum Breaker: An assembly used to isolate entire irrigation lines from potable water systems. It has the ability to withstand supply pressure for long periods and to prevent backflow of toxic and nontoxic water into the potable water system in back-siphonage conditions. To be approved, these devices must be readily accessible for in-line maintenance and testing.

Pretreatment: The reduction of the amount of pollutants, the elimination of pollutants, or the alteration of the nature of pollutant properties in wastewater prior to or in lieu of discharging or otherwise introducing such pollutants into a POTW. The reduction or

alteration may be obtained by physical, chemical or biological processes, process changes or by other means, except as prohibited by Rule 62-625.410(5), F.A.C. Appropriate pretreatment technology includes control equipment, such as equalization tanks or facilities for protection against surges or slug discharges that might interfere with or otherwise be incompatible with the POTW. However, where wastewater from a regulated process is mixed in an equalization facility with unregulated wastewater or with wastewater from another regulated process, the effluent from the equalization facility must meet an adjusted pretreatment limit calculated in accordance with Rule 62-625.410(6), F.A.C.

Pretreatment Program: A program administered by a public utility that meets the criteria established in Rule 62-625.500, F.A.C.

Pretreatment Requirement: Any substantive or procedural requirement related to pretreatment, other than a pretreatment standard, imposed on an industrial user.

Pretreatment Standard: Any regulation containing pollutant discharge limits promulgated by DEP under F.S. Ch. 403, which applies to industrial users. This term includes prohibitive discharge limits established in rule 62-625.400, F.A.C.

Private Sewage Disposal System: Any individual on-site sewage treatment and disposal system such as septic tanks, cesspools and similar facilities, but not including package sewage treatment plants.

Properly Shredded Garbage: The wastes from the preparation, cooking, and dispensing of food that have been shredded to such a degree that all articles will be carried freely under the flow conditions normally prevailing in public sewers, with no particle greater than one-half (1/2) inch (1.27 centimeters) in any dimension.

Publicly Owned Treatment Works (POTW): A treatment works which is owned in this instance by the city. This definition includes any sewers that convey wastewater to the treatment works, but does not include pipes, sewers or other conveyances not connected to a facility providing treatment.

Public Sewer: A common sewer controlled by a governmental agency or public utility.

Purveyor or Water Purveyor: The owner or operator of the public potable water system supplying an approved water supply to the public.

RCRA - Federal Resource Conservation and Recovery Act.

Reclaimed Wastewater: Wastewater that has received at least secondary treatment and is reused after flowing out of a wastewater treatment facility.

Reclaimed Water: Wastewater effluent that has received at least secondary treatment and is reused, after additional treatment including filtration and high level disinfection, in accordance with Chapter 17-610, FAC, as amended, treatment criteria.

Reduced Pressure Principle Device: An assembly of two (2) independently operating approved check valves with an automatically operating differential relief valve between the two (2) check valves, tightly closing shutoff valves on either side of the check valves, plus properly located test cocks for the testing of the check and relief valves. The entire assembly shall meet the design and performance specifications and approval of a recognized and city approved testing agency for backflow prevention assemblies.

Removal: A reduction in the amount of a pollutant in the POTW's effluent or alteration of the nature of a pollutant during treatment at the POTW. The reduction or alteration can be obtained by physical, chemical or biological means and may be the result of specifically designed POTW capabilities or may be incidental to the operation of the treatment system. Removal as used in this chapter shall not mean dilution of a pollutant in the POTW.

Replacement Irrigation System: An irrigation system taking, filling the place, being or providing a substitute for an established irrigation system.

Retail Customers: Those customers occupying any residential, commercial or industrial facility within or outside the city, which is connected directly or indirectly to the city sewage collection system and is charged in accordance with the rate schedule contained herein.

Sanitary Sewer: A sewer that carries by gravity, or under pressure, liquid and water-borne wastes from residences, commercial buildings, industrial plants, and other institutions; and to which storm, surface waters, and ground waters are not intentionally admitted.

Seawater: An aqueous solution with a chloride concentration equal to or greater than 19,000 mg/L.

Septic Tank: A subsurface impervious tank designed to temporarily retain sewage or similar waterborne wastes together with:

(1) A sewer line constructed with solid pipe, with the joints sealed, connecting the impervious tank with a plumbing stub out; and

(2) A subsurface system of piping to drain the clarified discharge from the tank and distribute it underground to be absorbed or filtered.

Service Line: The line on the premises, installed and maintained by user, connecting the system to the premises.

Sewage: A combination of the water-carried wastes from residences, business buildings, institutions and industrial establishments, together with such ground waters and surface and stormwaters as may be unintentionally present.

Sewage Treatment Plant: All facilities for treatment and disposal of sewage.

Sewage Works: All facilities for collecting, pumping, treatment, and disposal of sewage.

Sewer: A pipe or conduit for carrying sewage.

Sewer System: All conduits and works operated by the city for the collection and conveying of sanitary sewage from the pipe connection at the property line fronting the individual properties to the point of final disposition thereof, and all equipment and facilities used in connection therewith, including all pipelines, manholes, trunk lines, pumping equipment, lift stations, purification and treatment facilities and works whatsoever, real or personal, now or hereafter owned or used by the city in the operation of the sewer system.

Shall: Always mandatory and not merely directory.

Shall and Will: Words that when utilized in this chapter have a mandatory meaning.

SIC - Standard Industrial Classification.

Significant Industrial User: Except as provided in (3) below, the following shall apply:

(1) All industrial users subject to categorical pretreatment standards under Rule 62-625.410, F.A.C., and 40 CFR Chapter 1, Subchapter N, which has been adopted by reference in Chapter 62-660, F.A.C.

(2) Any other industrial user that discharges an average of 25,000 gallons per day or more of process wastewater to the POTW (excluding domestic wastewater, noncontact cooling and boiler blowdown wastewater); contributes a process waste stream which makes up 5 percent or more of the average dry weather hydraulic or organic capacity of the treatment plant, or is designated as such by the control authority on the basis that the industrial user has a reasonable potential for adversely affecting the POTW's operation or for violating any pretreatment standard or requirement in accordance with Rule 62-625.500(2)(e), F.A.C.

(3) Upon a finding that an industrial user meeting the criteria in subsection (2) above has no reasonable potential for adversely affecting the POTW's operation or for violating any pretreatment standard or requirement, the control authority may at any time, on its own initiative or in response to a petition received from an industrial user, and in accordance with Rule 62-625.500(2)(e), F.A.C., determine that such industrial user is not a significant industrial user.

Significant Violation: A violation which remains uncorrected for 45 days after notification of noncompliance, which is part of a pattern of noncompliance over a 12 month period; which involves a failure to accurately report noncompliance; or which results in the POTW exercising its emergency authority to halt or eliminate immediately a discharge.

Slug: Any discharge of water, sewage or industrial waste which in concentration of any given constituent or in quantity of flow may cause upset of the POTW operation or exceeds five times the average 24 hour concentration of flows during normal operation for any period of duration longer than 15 minutes.

Slug Discharge: Any discharge of a nonroutine, episodic nature.

SS - Suspended Solids.

Standard Industrial Classification (SIC): A classification pursuant to the Standard Industrial Classification Manual issued by the Executive Office of the President, Office of Management and Budget, in 1972, as amended from time to time.

Standard Methods or Standard Methods for the Examination of Water and Wastewater: According to the most recent edition, as published jointly by American Public Health Association, the American Water Works Association, and the Water Environment Federation.

State: The State of Florida or regulatory agency within the state government having jurisdiction over a particular topic of concern.

Storm Drain (sometimes termed Storm Sewer): A sewer which carries storm and surface waters and drainage but excludes sewage and industrial wastes, other than unpolluted cooling water.

Stormwater: Waters from rainfall runoff. Stormwater specifically excludes sewage and industrial wastes.

Suspended Solids: Total suspended matter that either floats on the surface of, or is in suspension in, water, wastewater or other liquids, and that is removable by laboratory filtering as prescribed in "Standard Methods for the Examination of Water and Wastewater" and referred to as nonfilterable residue.

Tap-In Charge: The charge imposed to defray the cost of making a service connection.

Territory: The service area supplied potable water by the city.

TKN - Total Kjeldahl Nitrogen.

Toxic Pollutant: Any pollutant or combination of pollutants listed as toxic in regulations promulgated by the Administrator of the Environmental Protection Agency under the provisions of the Clean Water Act, as amended from time to time, being 33 U.S.C. 1251 et seq.

Treated effluent: Water that has received at least secondary treatment and is reused after flowing out of a wastewater treatment facility.

Unusual: Not ordinary, in most cases referring to greater than normal amounts of a contaminant in the domestic wastewater.

Upset: An exceptional incident in which there is unintentional and temporary noncompliance with categorical pretreatment standards because of factors beyond the reasonable control of the industrial user.

U.S.C. - United States Code.

User: Any person who contributes, causes or permits the contribution of wastewater into the POTW.

Utilities: Those services rendered by the city (i.e., electric, water, sewer, garbage, etc.)

Utility Account: A numbered record of debit and credit entries to cover transactions pertaining to the billing of utilities.

Wastewater: A combination of the water-carried wastes from residences, business buildings, institutions and industrial establishments, together with such ground, surface and stormwaters as may be present.

Wastewater Collection System: The City sewer facilities utilized to collect and transport wastewater from the customer premises to the wastewater treatment facility.

Wastewater, Domestic: Wastewater discharged into the sanitary sewers in which the average concentration of total suspended solids and BOD is not more than 400 mg/l, total phosphorus is not more than 15 mg/l, total Kjeldahl nitrogen (TKN) is not more than 30 mg/l, COD is not more than 800 mg/l and TDS is not more than 2000 mg/l.

Wastewater, Industrial: The wastewater from industrial, commercial and other establishments, as distinct from domestic wastes.

Watercourse: A channel in which a flow of water occurs, either continuously or intermittently.

Water Distribution System: The City water supply and distribution system.

Water Meter: A mechanical device designed to measure the flow of water to a specific location. The water meter is owned and installed by the Department to measure water consumption of the customer. Water meter readings are used as the basis for billing of both water and sewer bills.

Water, Nonpotable: Water which is not safe for human consumption or which is of questionable quality.

Water, Potable: Any water which, according to recognized standards, is safe for human consumption.

Water Resource: Any and all water on or beneath the surface of the ground, including natural or artificial water courses, lakes, ponds, or diffused surface water, and water percolating, standing or flowing beneath the surface of the ground.

Water Service: That portion of the water distribution system designed to transport water through pipes to serve a specific location, lot, plot or parcel of land.

Water, Service Connections: The terminal end of a service connection from the public potable water system; that is, where the water purveyor loses jurisdiction and sanitary control over the water at its point of delivery to the customer's water system. If a meter is installed at the end of the service connection, the service connection: The downstream end of the meter. There should be no unprotected takeoffs from the service line ahead of any meter or backflow prevention device located at the point of delivery to the customer's water system. “Service connection” shall also include water service connection from a fire hydrant and all other temporary or emergency water service connections from the public potable water system.

Water Shortage Condition: When sufficient water is not available to meet present or anticipated needs of persons using the water resource, or when conditions are such as to require temporary reduction in total water usage within a particular area to protect the water resource from serious harm. A water shortage usually occurs due to drought.

Water Shortage Emergency: That situation when the powers which can be exercised under Part II of Chapter 40E-21, Florida Administrative Code, are not sufficient to protect the public health, safety or welfare, or the health of animals, fish or aquatic life, or a public water supply, or commercial, industrial, agricultural, recreational or other reasonable uses.

Water System: The entire system of production, treatment and distribution of water throughout the city and its environs. The water system shall be considered as made up of two (2) parts: The customer system and the utility system.

(1) The “customer system” shall include those parts of the facilities beyond the termination of the utility distribution system which are utilized in conveying utility-delivered domestic water to points of use.

(2) The “utility system” shall consist of the source facilities and the distribution system; and shall include all those facilities of the water system under the complete control of the utility, up to the point where the customer's system begins (meter). The “source” shall include all components of the facilities utilized in the production, treatment, storage and delivery of water to the distribution system. The “distribution system” shall include the network of piping used for the delivery of water from the source to the customer's system.

WPCF - Water Pollution Control Federation.

1.8 Compliance with Other Applicable Regulations Required.

(a) The provisions of this chapter shall not be deemed as alleviating compliance with applicable state, county and federal regulations.

(b) The city reserves the right to establish more stringent limitations or requirements if deemed necessary to comply with the objectives presented herein.

1.9 Service of Notice; Requirements.

(a) Any notices, as prescribed herein, shall be deemed to have been properly served if left upon the premises of the owner or if mailed to the owner, directed to, or left at his address as shown on the city's utility account records.

(b) All notices of a general character, affecting or likely to affect more than one owner, if required by these rules to be given, shall be deemed to have been properly given or served if advertised at least once in one of the weekly newspapers.

1.10 Protection of City Property.

It shall be the consumer's responsibility to properly protect the city's property on the consumer's premises or easement. In the event of any loss or damage to property of the city caused by or arising out of carelessness, neglect or misuse by the consumer, the cost of replacing the property or repairing the damage shall be paid by the consumer.

1.11 City not Liable for Failure of Service.

The city will at all times use reasonable diligence to provide continuous service and having used due diligence shall not be liable to the consumer for complete or partial failure or interruption of service, or for fluctuations in pressure, resulting from causes beyond its control, or through the ordinary negligence of its employees, servants, or agents, nor shall the city be liable for the direct or indirect consequences of interruptions or curtailments made in accordance with the provisions of any of its rate schedules. The city shall not be liable for any act or omission caused directly or indirectly by strikes, labor troubles, accidents, litigation, shutdowns or repairs or adjustments, interference by federal, state, or municipal governments, acts of God, for any damage resulting

from the bursting of any main, service pipe, from the shutting off for repairs, extensions or connections, or for the accidental failure of supply from any cause whatsoever. In case of emergency the city shall have the right to restrict the use of utilities in any reasonable manner for the protection of the public, the city and its utilities.

1.12 Consumers to Grant Easements, Etc.; Access to Premises by City Employees.

(a) The consumer shall grant or cause to be granted to the city without cost all rights, easements, permits, and privileges which are necessary for the rendering of service. Employees of the city, agents and contractors of the city under the city's direction shall have safe access at all reasonable hours to the premises of the consumer for the purpose of reading meters, installing, inspecting, repairing or removing any of its properties, or for any purpose incidental to the rendering of the service. Access shall be granted at all times for emergency purposes. Safe access means physical access free from interference of any kind including but not limited to pets or other animals, fences or landscaping.

(b) If such access is precluded or denied due to locked gates or fences, animals, shrubbery, or the city is otherwise temporarily prevented access, the city may estimate the consumer's consumption on the basis of previous consumption or any other method in accordance with generally accepted utility practices which produces a reasonable estimate of consumption during the relevant period. Any difference between the estimated consumption and the actual consumption will be adjusted through subsequent readings. Where it has been necessary to estimate the consumer's consumption, the combined monthly statement shall carry appropriate notice to that effect.

(c) If such access is precluded or denied due to locked gates or fences, animals, shrubbery, or the city is otherwise temporarily prevented access for purposes of maintenance, repair or rehabilitation of existing facilities, the City may, after verbal or written notice is provided at the property, enter the property as required to perform the maintenance, repair or rehabilitation of facilities. The customer shall be responsible for removal or modification of facilities to provide the City necessary access for such purposes.

(d) If the meter is inaccessible for two consecutive months the consumer will be notified that access must be made available to the city during the next regular meter reading cycle. If the meter is inaccessible to the meter reader at the time of the next regular meter reading, the consumer must call the city as specified in the notice to make special arrangements for a city representative to gain access to the meter for the purpose of reading and inspecting the meter. In addition to the special arrangements for access the city may require, at its option, either

(1) Relocation of the Meter to an Accessible Location.

(2) Installation and Use of a Remote Metering Device.

The cost of the meter relocation may be borne by the customer. Failure to arrange such access or to pay for the meter relocation will result in the initiation of termination of service.

(e) A charge in accordance with the fee schedule will be assessed for each specially arranged visit. No additional charge will be assessed if the meter is made accessible for the regular meter reading cycle.

(f) Subsections (b) and (d) of this section shall not be applicable to any consumer's account if the meter is found to have been tampered with as prohibited in this chapter.

1.13 Receiving Service Without Paying for Same.

It shall be unlawful for any person or consumer to receive or attempt to receive, except in the manner expressly authorized, utility service from the city without paying the required rates and charges.

CHAPTER 2: EXTENSIONS, REPLACEMENTS AND ADDITIONS

2.1 System to Conform to City Requirements

All persons desiring to have designed and constructed an extension to the water supply system, or sewage collection system to serve a subdivision, lot or parcel and to have said system included in the system of the city must comply in every and all respects with the provisions of this chapter, hereinafter set forth.

2.2 Connections to Water, or Sanitary Sewerage System

All connections to active water or sanitary sewer facilities shall be made in accordance with the applicable Municipal Code. All connections to the water system which are 2 inches or smaller shall be made by the City or its agents. All private water fire lines or sanitary sewer laterals intended to be connected to the City Water or Sewer Systems respectively, shall not be constructed without a written permit issued by the building official with endorsement from the Water and Sewer Utility Department. All connections made by private entities in accordance with a City permit shall be made by contractors approved by the Department.

2.3 Site Plan Review and Inspection of Projects Requiring FDEP or PBCPHU Permits.

For each project requiring a permit issued by the Florida Department of Environmental Protection or the Palm Beach County Public Health Unit, and also requiring city approval in connection therewith, there is hereby fixed a service charge for the review of plans and inspection of the site. Such water and sewer utility site plan review service charge shall be in accordance with the latest fees and charges approved by resolution of the City Commission; and shall be paid in full prior to the city's approving the permit applications.

2.4 Plans and Specifications to be Approved by City Officers.

No service shall be rendered by the city to any consumer at any premises until such time as the appropriate building official, or his/her designee, shall have approved the premises for services as follows:

(a) Water/Sewer service. Approval of a dwelling or premises for service must be obtained from the appropriate city building or water utility official.

Copy of Approval. Each applicant for service must submit a copy of the approval where required as part of the application for service.

2.5 Construction Standards.

(a) All construction, repairs and restoration activity within City rights-of-way shall conform to the technical standards and specifications as contained in the Florida Department of Transportation Roadway Design and Construction. latest edition and minimum street requirements in City Code. Any deviation from the Florida Department of Transportation manual or City Code must be approved by the Public Services Director prior to any work being performed.

(b) All water and sewer system improvements shall be constructed in accordance with the City Design Standards attached and made part of this PPM-W manual. Where City Standards are not applicable, improvements shall be made to the latest version of the Palm Beach County Water Utilities Department Uniform Policies and Procedures Manual, Chapter 4: Minimum Design and Construction Standards.

(c) All construction on private property shall be constructed in accordance with the City's Land Development Regulations and the Florida Building Code, latest issue.

2.6 Water Improvements for New Subdivisions

The design, construction and payment for all water and sewer improvements to provide service shall be in accordance with the following:

(a) In the case of a system to serve a subdivision, the developer must first submit to the City a preliminary plat showing all details of the topography thereon.

(b) In the case of a system to serve an existing lot or parcel for which a subdivision plat is not required, the developer must submit a preliminary site plan showing the improvements proposed and all details of the topography thereon.

(c) Upon receipt of said preliminary subdivision plat or site plan, the Utility will, after reasonable time for study thereof, advise the developer as to the availability of a water main. If the developer desires to proceed with providing water to his property, he shall submit a written application to the city notifying the City and informing the City of the

licensed engineering firm that will handle the design and construction of said water improvements.

(d) The applicant shall be responsible for the total cost of construction of said improvement, which consent shall be evidenced by the applicant's depositing of a construction bond in accordance with the right-of-way permitting requirements in this chapter.

(e) Fire Hydrants.

(1) All water main extensions in City streets or rights-of-way shall be sized to provide for adequate fire flow from hydrants located on the main extension.

(2) All fire hydrants shall be conveyed to the city as part of the approved instrument of dedication; and all costs of, maintenance and operation of fire hydrants, after acceptance of such dedication, shall be the responsibility of the city.

(3) Each hydrant shall be capable of delivering not less than 1000 gpm with a residual pressure of not less than 20 psi.

(4) Fire hydrant branches (from main to hydrant) will be not less than six inches in diameter and as short as possible with a maximum of 300 feet. Each branch will be individually gate valved.

(f) The applicant shall bear all costs for the acquisition of any easements that the city shall deem necessary to furnish the service requested by applicant.

(g) The developer will have constructed the required improvements consistent with plans and specifications approved by the city.

(h) Upon completion of the project the applicant shall convey to the city the improvements and any appurtenances thereto by an appropriate instrument recordable in the public records of Palm Beach County. The city shall have the responsibility of maintaining every facility constructed and installed under these provisions.

2.7 Nonconforming System Not to be Connected

All developers desiring to have designed and constructed a water supply system in any subdivision, lot or parcel and not complying in every respect with the terms of this chapter shall not be allowed to connect said water supply system.

2.8 Water and Sewer Service Line Specifications

Service line size and material type located on the customer’s property shall be determined under the purview and approval of the Plumbing Inspector in the City’s Building Division. Service line size and material type for service lines in City rights-of-way or utility easements shall be determined by the Director.

2.9 Easements and Rights-of-Way

The owner/developer has sole responsibility for providing all necessary utility easements to the City. These easements must be provided with the current record property owner(s) as Grantor and the City as Grantee. An easement survey plat is required to describe the easement area and physical elements being conveyed.

2.10 Private Fire Lines

(a) The property owner shall be responsible for installation up to the approved water source, and installation and maintenance of the fire line on owner's property shall be subject to inspection by the city. The property owner shall incur all costs related to installation of said fire line, including repair of sidewalks, streets, driveways, swale areas and the like.

(b) Owner/Contractor shall abide by requirements and specifications set forth by the city. Including, but not limited to the following conditions:

(1) Use for Fire Purposes Only. Except for extinguishing fires or testing fire equipment, no branch connection will be made on, or water taken from, a private fire service or a public or private fire hydrant without written permission from the Water Utilities Director.

(2) Fire services and automatic fire sprinkler systems (including residential) will be designed and installed in accordance with the provisions of the National Fire Protection Association (NFPA) Code and other applicable codes, including proper backflow protection, and will require separate fire and domestic service lines.

(3) Domestic water use may include residential life safety automatic sprinkler systems to one- and two-family dwelling units in accordance with the provisions of the National Fire Protection Association (NFPA) Code Section 13D, “Sprinkler Systems for One- and Two-Family Dwellings and Mobile Homes.” The entire service will be metered. The meter will be sized for the minimum allowable flow demand per NFPA 13D. The water service will not be a fire service.

(4) All sprinkler systems and private fire services will be metered or equipped with a double detector check valve assembly or reduced pressure detector assemble with metered bypass. The type of meter will be determined by the Water Utility. A reduced pressure principle backflow preventer (BFP) must be installed on all new service lines to fire sprinkler systems with a Siamese connection.

(5) Because of the danger of pollution, the fire line shall have no connection with any other source of supply with the exception in the case of a tank or fire pump installed as part of the fire system.

(6) Double Detector Check. At the time of installation of the fire line, a double detector check assembly shall be installed by the property owner at the location designated by the city. There shall be at a minimum an assembly installed at each connection to the city's system to prevent water from the fire system running back into the city mains. Said double detector check shall be satisfactory to the insurance companies, and also to the city; said double detector check shall be fitted with a by-pass, on which shall be set a meter, the purpose of which shall be to indicate whether or not water is being used through this connection and for the further purpose of showing any leakage, if same exists.

(7) Property owners with private fire service lines located outside the corporate limits of Lake Worth shall comply in all respects with the requirements in this chapter.

2.11 City Expansion of Potable Water Service

It is the intent of the City to provide potable water service to all properties located within the City and the potable water service area outside the City, as far as practical and effective to do so.
The Director, or his/her designee may establish plans for expansion of the water facilities within the City limits. The Water Utility shall be responsible for the design and construction of such improvements. Reimbursement of costs for such improvements shall be incorporated into the water connection fees for new connections served by such improvements, based on the length of piping extension constructed within the last three years to provide the connection.

The City may use special assessments, governed by City ordinance, to extend water service within its service areas both inside and outside the City.

CHAPTER 3: SEWER CONNECTIONS

3.1 City Expansion of Sewer Service

It is the intent of the City to provide sewer service to all properties located within the City and the sewer service area outside the City, as far as practical and effective to do so.
The Director, or his/her designee may establish plans for expansion of the sewer facilities within the City limits. The Water Utility shall be responsible for the design and construction of such improvements. Reimbursement of costs for such improvements shall be incorporated into the sewer connection fees for new connections served by such improvements, based on the length of piping extension constructed within the last three years to provide the connection.

The City may use special assessments, governed by City ordinance, to extend sewer service within its service areas both inside and outside the City.

3.2 Gravity Main Extension

Where gravity mains are required to be constructed by the developer to extend wastewater service to a lot or development, which does not have an existing building, the property owner for

properties receiving such wastewater service shall pay all costs associated with the gravity main needed to support the project. Sizing and routing of the gravity main will be determined by the city.

3.3 Pump Station Construction

Where a pumping station is constructed by the developer to receive the gravity wastewater flow from a development, the developer shall either provide a City lift station or a private lift station for such purpose.

If the developer provides a City lift station, the design and construction of the pumping station shall be in accordance with city standards. The developer shall donate the pumping station to the city and pay all costs associated with pump station design and construction required to serve the proposed development including all future phases. The city may elect to pay oversizing costs, if required, to serve existing or future customers outside of the proposed development.

If the developer provides a private pumping station, the station shall be designed by a licensed professional engineer to be suitable for the service and shall be in accordance with the requirements of the PBCHU and FDEP. The developer shall provide the City with suitable assurances that the property owner will operate and maintain the pumping station for the life of the collection system at their expense.

3.4 Force Main Extension

Where force mains are constructed by the developer to extend wastewater service to a lot or development, the applicant for such wastewater service shall pay all costs associated with the force main needed to support the project. Sizing and routing of the force main will be determined by the city.

3.5 Service Line Clean-Out.

(a) A clean-out for the servicing of sewer systems attached to improvements on private property shall be located on such private property at the edge of such property line. The top of such clean-out section housing the sealed opening shall be brought to, but not above, grade level.

(b) This section shall apply only to new sewer connections being placed onto any private property subsequent to the approval of these policies and procedures by resolution of the City Commission.

3.6 PBCPHU and FDEP Permits

Before commencement of construction of a sewage disposal system, the owner /developer shall first obtain a written permit issued by the PBCPHU and/or FDEP as required.

(a) A permit for a private sewage disposal system shall not become effective until the installation is completed to the satisfaction of the PBCPHU. The PBCPHU shall be allowed to inspect the work at any stage of construction and, in any event, the applicant for the permit shall notify the PBCPHU when the work is ready for final inspection and before any underground portions are covered.

3.7 Private Sewage Disposal.

(a) Where a public sanitary sewer is not available, the building sewer shall be connected to a private sewage disposal system complying with the provisions of this section.

(b) The type, capacities, location and layout of a private sewage disposal system shall comply with all recommendations of the PBCPHU and the agency of the state having jurisdiction. No septic tank shall be permitted to discharge to any public sewer or natural outlet.

(c) At such time as a public sewer becomes available to a property served by a private sewage disposal system, as provided in subsection (B)(5) above, a direct connection shall be made to the public sewer within 180 days after date of official notice by the city to do so in compliance with this chapter, and any septic tanks, cesspools, and similar private sewage disposal facilities shall be abandoned and filled with suitable material, as outlined in Chapter 64E-6, F.A.C.

(d) The owner shall operate and maintain the private sewage disposal facilities in a sanitary manner at all times, at no expense to the city.

(e) Any premises that has a septic tank, privy or any other sewage, industrial waste, or liquid waste disposal system, located thereon that does not function in a sanitary manner shall be corrected within 90 days from the receipt of written notification from the PBCPHU or the City, that the system is not functioning in a sanitary manner, and order that the system be corrected.

(f) No statement contained in this section shall be construed to interfere with any additional requirements that may be imposed by the PBCPHU or the City Commission.

(g) Failure of the property owner to correct private sewage disposal facilities within 90 days of such notice, shall constitute a public health hazard, which may result in the City refusing sewer service, or conducting repairs, which shall be charged to the property owner as part of the local sewer bill.

3.8 Construction and Permitting of Building Sewers.

(a) No unauthorized person shall uncover, make any connections with or opening into, use, alter, or disturb any public sewer or appurtenance thereof without first obtaining a written permit from the City Building Division, with approval of the Director.

(b) It shall be unlawful to commence work on any building or premises on which plumbing is required or is to be installed; perform any work covered by the FBC, including but not limited to the excavation or obstruction of any public or private street, alley or other thoroughfare for the purpose of installing plumbing, sewer work or connection to the POTW or appurtenance thereof, commence the construction, reconstruction, alteration, repair and/or remodeling of any plumbing, sewer or liquid waste treatment system, without first having obtained a permit from the building official as required by the FBC, and this chapter. No sewage collection system intended to convey flow to the POTW shall be permitted without prior approval of the Director.

(c) Plans and specifications for building sewers and connections shall be submitted to the building official for approval by the Director prior to the issuance of a city permit.

(d) House sewers from buildings shall be connected to the public sewers only at such service connection as may be designated in the permit. The work of connecting existing sewers to city sewers in conformance with plans filed in accordance with the terms of this chapter must be performed by a duly licensed master plumber. No person other than designated city employees or a duly licensed master plumber shall tap, cut into, or break open any public sewer mains or lines, unless approved by the Director in writing.

(e) All costs and expenses incidental to the installation of connection of the building sewer shall be borne by the owner. The owner shall indemnify the city from any loss or damage that may directly or indirectly be occasioned by the installation of the building sewer and connection.

(f) Existing building sewers may be used in connection with new buildings sewers only when they are found on examination and test by the building official, to conform in all respects to the requirements governing new building sewers as outlined in Chapter 29 of the FBC in effect in Palm Beach County, Florida, as revised from time to time.

(g) No person shall connect roof downspouts, foundation drains, areaway drains, or other sources of surface runoff or groundwater to a building sewer or building drain which in turn is connected directly or indirectly to the POTW.

(h) The applicant for a building sewer permit shall notify the Building Department when the building sewer is ready for inspection and connection to the public sewer. The connection and testing shall be made under the inspection of the Building Official or his representative, for connection to a lateral at the property lines or the Water Utility Department for connection within a public right-of-way or easement.

(i) All excavations for building sewer installations shall be adequately guarded with barricades and lights in compliance with all OSHA requirements so as to protect the workers and the public from hazard. Streets, sidewalks, parkways and other public property disturbed in the course of the work shall be restored in a manner satisfactory to the city.

(j) The connection to the building sewer into the public sewer shall conform to the requirements of the FBC or other applicable rules and regulations of the Water Utilities Department. All such connections shall be made gas-tight and water-tight and verified by the proper testing.

(k) If sewers are not available for connection because of insufficient capacity, the city, at the customer request or by own choice, may upgrade the system when and if such upgrade is not detrimental to the system. The City shall then require the customer to connect to the sewer system. The customer shall pay the city for required connection fees to reimburse the city for costs incurred to make sewers available to him.

(l) On completion of any construction for building sewers and connections licensed under this chapter, as-built drawings signed by a professional engineer or land surveyor registered in the state shall be submitted to the BCDNRP and to the city. Certificates of occupancy for any structure built under the provisions of this chapter or for structures connecting to a sewer collection/transmission system built under the provisions of this chapter shall not be issued by the city until notified by the Director or designee that said structure and/or sewer as-built drawings have been reviewed and the project approved.

3.9 Sewer Charges to be Levied.

Sewer charges shall be levied on all water meters where sewer is available unless one of the following conditions exists:

(a) Irrigation only meter is installed to monitor and manage use of water for irrigation purposes. This provision only applies to those irrigation systems when it can be shown and verified to the Director or designee's satisfaction that the system is separate and distinct from the potable water supply.

(b) Process water only meter is installed to monitor and manage use of water for process water that does not enter the sanitary sewer system. This provision only applies to those process water systems when it can be shown and verified to the Director or designee's satisfaction that the system is separate and distinct from the potable water supply.

(c) Fire lines that are separate from domestic water supply and have their own meter as approved by the Director or designee.

3.10 Building Sewers and Connections, Maintenance by Owner.

(a) The owner shall be responsible to maintain, repair, and replace, as necessary all sewer laterals and appurtenances serving the owner's property, and which are not located within the city rights-of-way. The clearing of any blockages within the sewer lateral is included within this obligation.

(1) A sewer lateral is that portion of sewer pipe, which connects a structure to a sewer main. Appurtenances to the sewer lateral include, but are not limited to the

fitting to which the owner's plumbing is connected, the clean-out and plug, and any markings or devices installed as an aid to locating the service connection.

(2) Except as provided in this section, any portion of the sewer lateral located within the city rights-of-way, once accepted by the city, is the responsibility of the city. All other portions of the sewer lateral are the responsibility of the property owner.

(3) No modification, repair or replacement of a sewer lateral within the public right-of-way shall be performed without the written consent of the city Water Utility department.

(4) Nothing herein shall be construed to prohibit the city from performing any repairs or replacement of sewer laterals in the public rights-of-way.

(5) The city shall not be responsible for, nor will the city provide reimbursement for claims of costs incurred by property owners to clear blockages to any sewer lateral, including any and all damage within the residence or structure, without a written agreement, entered into prior to the commencement of any work on the sewer lateral.

(6) In the event of an emergency and in order to protect the public health and safety, the city may perform repairs to the sewer lateral on private property. Wherever possible, the city shall, at a minimum, make reasonable attempts to notify the property owner of the need for repairs to the sewer lateral.

(b) If a sewer connection permits entrance of infiltration or inflow, the Water Utilities Department shall require the customer to repair the sewer at the customer's expense within 90 days. The City may charge the owner a sewer surcharge that reflects the additional cost of sewage treatment from the owner's property; and/or require the owner to disconnect his sewer from the city's sewer system.

CHAPTER 4: APPLICATION FOR SERVICE AND BILLING

4.1 Purpose and Policy.

To enact a uniform policy for water and sewer utility service applications, utility service security deposits, application of security deposits toward payment of delinquent utility bills, and refund of security deposits. The Department works with and uses the Customer Service office within the Electric Utility Department for customer service, billing, water meter reading, revenue collection and revenue protection functions. These functions shall be governed by the policies and procedures of the Electric Utility Department, as supplemented herein. Where there is any conflict with procedures established by the Electric Utility Department, their procedures shall govern.

4.2 Free Service Prohibited

There shall be no free services rendered by the water and wastewater utility systems and all users of the services and facilities shall pay for the use of such services and facilities at the established rates, unless rates are established by a separate municipal interlocal agreement approved by the Commission.

4.3 Application for Service

(a) All applications for water, and/or sewer service must be made at the Electric Utility customer service office, in writing, by completing the duly adopted utility service application form as provided by the City.

4.4 Owner of Premises Responsible for All Acts

(a) Each and every owner will be held fully responsible and liable by and to the city for all that is done or omitted on, in or about premises by any agent or tenant or other persons not in the employ of the city, who may gain access thereto.

(b) The tenant in or upon any premises of any owner, shall at all times and for all purposes connected with or arising from the city's utility services to and for such premises except the making of the original application for service connections and contract, be taken and construed to be the properly constituted agent of the owner.

4.5 Change of Ownership or Occupancy of Premises

(a) In the event of any change in ownership or occupancy of any premises connected to the system, it is the responsibility of the current customer to close the utility account and the responsibility of the new customer to apply for new service. In addition to applying for new service, the new owner or tenant is required to provide proof of occupancy, such as a closing statement or deed for ownership, or a copy of a lease for tenancy, to establish the exact date of ownership or tenancy change. The current owner or tenant is responsible for all utility charges on the account up to the date of the ownership or tenancy change, and the new owner or tenant is responsible for all utility charges thereafter.

(b) When a customer vacates or sells property, leaving an unpaid bill, the city may refuse any service the same customer may be using or intends to use in the future, until the original delinquent account is paid in full, regardless of whether the other accounts of the customer are in good standing.

4.6 Classification of Combined Accounts:

Accounts that contain both residential and nonresidential facilities served through a common meter may be treated as either residential or nonresidential, whichever method of computation results in the largest number of equivalent living units.

4.7 Authority to Determine Type of Service;

The Director, or designee shall have the authority to determine the location and type of service to be rendered to each Consumer.

4.8 Bill Payment

(a) Payment of all bills and accounts of the city for utilities service shall be made at the Electric Utility Customer Service Office, or at any other approved city facility, or by utilizing any other payment method, electronic or otherwise, approved by the city.

4.9 Application to Become Binding Contract upon Installation of Service

(a) Effective when Installation Complete.

(1) The application becomes a binding contract upon both the owner and the city when the service connection for water and sewer utility services applied for has been installed and completed.

(2) It is the property owner's responsibility to maintain their side of the service. It is the city's responsibility to maintain the service from the adjacent public right-of-way to point of demarcation. Points of demarcation are as follows:

a. For potable water supply the demarcation point is the water meter.
b. For fire lines the demarcation point is the valve at the property line.
c. For sewer service lines the demarcation point is the property line, or the cleanout at the property line, where applicable.

(b) Term of Contract for Service. All contracts for service shall expire at the end of the next succeeding calendar month from date of application, but all contracts shall continue in force by renewal without act or notice from either party to the other, from month to month unless ten days' notice in writing is given by either party to the other of a desire to terminate the contract at the expiration of the then calendar month, and the charging for and payment of water rates in any manner, and at any interval or period, shall not be construed as altering the period of the contract or any renewal thereof under this rule.

(c) Rates for Service and Rules to be Part of Contract for Service. All of the foregoing rates and rules shall be considered and taken to be a part of the contract, so far as the same may be applicable to the class of service covered by and included in such contract, with every owner or consumer who shall make application for the service of the city or whose premises are furnished with, or are connected to the system of the city for such service, and every such owner shall be considered as having, and be taken and construed to have expressed his consent to be bound thereby whenever application service is made, or so long as the premises of any such owner are furnished with, or are connected to the system of the city for such service.

(d) Authority and Grounds for Disconnection of Service. All contracts shall be subject to cancellation and service there under discontinued by the city, for the following reasons:

(1) For misrepresentations or concealment in the application as to the premises or fixtures to be furnished with water supply service, or the use to be made of such service.

(2) For refusal or neglect to make any advance payment, if such is required by the city, or for refusal or neglect to comply with any requirements of the city as to meter service connection maintenance, alteration or renewal or other requirement relating to the water supply service of the city.

(3) For the use of service for or in connection with or for the benefit of any other premises or purpose than that stated in the application.

(4) For waste or excessive use of water through improper or imperfect pipes, fixtures or appliances, or in any other manner.

(5) For any interference or tampering, whether by act of commission or omission, with the meter measuring the service, or with any meter box or vault, or with service pipes, or valves thereon, or with any applicant of the city or with any appliance of the owner, which was or is required by the city for controlling or regulating the service, or who shall make or cause to be made any connection with any main, service pipe or other pipe, appliance or appurtenances used for or in connection with the city in such manner as to supply utilities from such connection to any outlet whatsoever without such utility passing through a meter or other measuring device used by the city for measuring and registering the quantity so passing through.

(6) Where there has been a change in the ownership of the premises, but no application from the new owner or owners has been made and approved by the city.

(7) Where the city has been or is being defrauded in any way.

(8) Where the contract has been in any way terminated by the owner.

(9) Any improper or illegal connections determined by the city to be detrimental to the public health.

(10) The violation of any rules of the city.

(11) Turning on the water supply at the city curb stop or at meter by the owner, his or her employees or agents shall subject the owner or consumer to an administrative fee. Upon the second offense, the city may, at its option, discontinue the service

and cut off the utility to said premises so long as the owner or consumer continues to reside at said premises.

(e) Emergency Shut-Off of Service. In case of accidents, breakdowns, shortage of water supply or any causes beyond its control, or because of any act or omission on the part of the city or Department, or their agents, or any of them, or in case of the making of repairs, renewals, or replacements, the city reserves the right to shut off the water supply from any one or any number of premises without notice, and shall in no manner be held responsible for any consequence of such shut-off.

(f) Notice of Shut-Off. The city will give notice in the manner deemed in its discretion to be most effective, of any shut-off of the utilities wherever and whenever the giving of such notice is practicable, but nothing in this chapter shall be construed to require the giving of such notice under any circumstances.

(g) Refunds or Credits not to be Made Because of Shut-Off. The shutting off of the utilities from and the discontinuance of service to, any premise or premises for any cause shall not entitle the owner to any abatement or deduction in or from the utility charges, nor to any refund on any such charges paid in advance, during or for the time of such shut-off unless the city determines that the shut-off was necessary due to an act of God and a credit is warranted

4.10 Service, Charges Commence upon Installation of Service; Exception

(a) New service installation. When application for service is made, the service, together with the charges and rates therefore, shall begin on the date of the completion of the service connection by the Utilities Department.

(b) Service reconnections. If a service connection already exists, service to new customers shall be turned on by the utility customer service office only upon written application of the customer and the charges and rates for water supply service shall commence from date of such turn- on in accordance with this chapter.

4.11 Delinquent Accounts.

(a) Criteria for Discontinuance of Service in the Event of Nonpayment shall be per the requirements of the Electric Utility Department, or as supplemented herein.

(1) Any bill and account will be considered delinquent on the 21st day after the billing date shown on the bill. A penalty of 10% per year, compounded monthly, will be assessed on any delinquent portion of the bill.

(2) If the bill remains unpaid, the next month's regularly scheduled bill will notify the customer of said delinquency and the date that service will be discontinued, which will be 45 days from the original billing date. No further notice shall be given prior to discontinuance, except that an additional 24-hour courtesy notice shall be

provided to commercial and hotel/motel establishments and to multifamily housing of ten units or more.

(3) The business day on which the payment is processed is the date of payment.

(b) Fees and Charges Related to Discontinuance of Service for Nonpayment.

(1) Service will not be restored to the premises until the delinquent portion of the customer's bill is paid, along with all applicable fees and charges as specified in the resolution approving water and sewer fees and charges.

a. Service disconnection charge for nonpayment.
b. After-hours service reconnection surcharge. After-hours service includes those cases where both the customer request is received and the reconnection service is performed before 8:30 a.m. or after 4:00 p.m. Monday through Friday, or any time on weekends and holidays.

(2) Customers who illegally restore their service after disconnection will be assessed charges and fines in accordance with this chapter.

(c) The Building Official and the Palm Beach County PBCPHU will be notified of any discontinuance of service for delinquent accounts when the service has been discontinued for 48 hours or more.

(d) Creation of Lien for Nonpayment.

(1) Recovery of Delinquent Charges: The city may recover by due process of law the amount of any unpaid utility service charge, including but not limited to, all billed amounts, collection costs, applicable interest charges, attorney fees, and delinquency fees.

(2) When service is furnished to the owner, occupant or occupants of premises, the charge for such service shall be and constitutes a variable and accruable lien against the premises, and shall become effective and binding as such lien from the date upon which the account becomes due, unpaid and in arrears.

(3) Liens accrued as set out in this section shall be of the same dignity as other City liens.

(4) The remedy provided in this section shall be cumulative and shall not be construed to waive the right of the city to require payment of any bill in arrears before renewing service to the premises in question.

(e) Upon a customer's request to extend payment of a bill, the city may approve, subject to review of the customer's account history, an extended payment agreement.

(1) A sliding scale payment plan for delinquent accounts shall be established. The city may adjust a payment plan based on the extenuating circumstances of a customer at the customer's request; provided, however, that in no event will the repayment period for a delinquent account balance exceed ten months. The penalty on the unpaid balance shall continue to accrue pursuant to paragraph (a)(1) of this section.

(2) No individual application may be made more than once in any 12-month period.

(3) Installment amounts due under the payment plan are payable in full together with full amounts billed for current charges and usage, no later than the due date for the current charges.

(4) Payment plans requested by customers for the repayment of previously unbilled charges identified by the city will be allowed repayment periods not to exceed the period of time over which the unbilled charges originally accrued.

(f)

(1) Any other provision of this chapter to the contrary notwithstanding, the city shall not refuse services or discontinue services to the owner of any rental unit or to a tenant or prospective tenant of such rental unit for nonpayment of service charges incurred by a former occupant of the rental unit; any such unpaid service charges incurred by a former occupant will not be the basis for any lien against the rental property under this section or legal action against the present tenant or owner to recover such charges except to the extent that the present tenant or owner has benefited directly from the service provided to the former occupant. This subsection applies only if the former occupant of the rental unit contracted for such services with the city or if the city provided services with knowledge of the former occupant’s name and the period the occupant was provided the services.

(2) The provisions of this chapter may not be waived through any contractual arrangement between the city and a landlord whereby the landlord agrees to be responsible for a tenant’s or future tenant’s payment of service charges.

(3) Nothing in this division shall be construed to limit the city’s rights, if any, under F.S. 159.17, as amended from time to time.

4.12 Adjustments on Metered Service Charges.

(a) Metered Water Services. No adjustments on metered service charges shall be made or allowed, except as provided herein, or as approved by the Director in writing:

(1) For errors, in meter readings on which such charges are based, or inaccuracies in the registration of any meter or in the event of error on the part of the city in the making of any charge or in the amount thereof, and then only provided claim for such abatement or deduction is made in writing to the utility customer service

office within 60 days after the date of the rendition of the bill or account in dispute.

(2) Unforseen Metered Leaks. When a premises experiences a catastrophic metered leak, which in the sole judgment of the Water Utilities Director is unforseen and not due to inadequate maintenance on the part of the user, and metered usage exceeds the average monthly usage for the preceding 12 months by 10,000 gallons, the property owner may apply for an adjustment for the period during which the metered leak occurred. The claim for such abatement or deduction shall be made in writing to the utility customer service office within 60 days after the date of the rendition of the bill said leak was measured.

(b) <u>Leak adjustment procedure</u>

Bill adjustments for loss of water shall be provided in accordance with the following water adjustment provisions:

- A Leak adjustment request form must be obtained from Customer Service and completed, signed, and submitted by the customer within 30 days of the contested bill. Proof of repair must be submitted with the form, if a repair is required.

- Upon submittal of the request form, the Utility will make a field investigation to determine the following:

  - The water meter was operating properly.
  - The water meter was read, recorded, and billed properly.
  - The cause of the excessive usage, if it is known.
  - There is no evidence that the excessive use was due to the intentional or negligent act of the customer.
  - The customer took prompt and reasonable action to determine the cause of the excessive use.
  - The customer took prompt and reasonable corrective action after discovering or being notified of a leak.
  - Proof of repair was submitted with the request form within thirty days from the billing date for the period in which the water loss occurred.

- A determination of whether an adjustment is granted shall be made at the sole discretion of the Water Utility Director or designee and shall be final.

- Water loss adjustments shall be limited to one adjustment every 24 months.

- If approved, the adjustment will be calculated on the maximum calculation as follows:

  - All gallons used shall be paid at the second lowest tiered water rates for the customer class assigned to the account, or
  - The bill will be recalculated based on the maximum usage over the last 24 months, or

- If the cause cannot be determined, the bill may be reduced based on one-half the measured usage.

- Residential accounts will receive no adjustment to the sewer account, since it is limited to a maximum usage.

- Commercial accounts will receive an adjustment to the sewer account if, in the determination of the Utility, the water was not disposed of in the sanitary sewer system.

- The Utility shall not make adjustments for bills not contested within thirty (30) days from the billing date, unless approved by the Water Utility Director.

- An adjustment shall be approved for no longer than two billing cycles.

- The Utility may extend the payment deadline for the disputed portion of the bill if the account is in current status. Adjustments shall not be granted for accounts that were delinquent prior to the disputed status.

- Adjustments will not be approved for the following:

  - Premises abandoned, or those that have not been provided reasonable care for the plumbing or irrigation system.

4.13 Minimum Water and Sewer Utility Bill.

The Minimum Water and Sewer Utility Bill is hereby established recognizing that a large proportion of the City's cost for providing water and sewer services are fixed, and that these costs are allocated to those customers with water or sewer connections, without regard to current usage. All owners of property with water or sewer connections are responsible for these minimum bills, when the properties are connected to the water and/or sewer service.

Owners shall be responsible for payment of the minimum bills for all properties with water or sewer connections, when the customer account for that property has been closed for a period of 60 days or more. Such charges will constitute a lien against the properties until paid.

The minimum bill herein for a single unit shall be billed the full month charge without proration for any period beyond the fifteenth day of the billing cycle, the period from the eighth to the fifteenth shall be 50% of the full month, and no minimum bill will be charged under eight days in a billing period. This will apply only to newly created accounts, reconnection of owners' accounts, and final bills.

4.14 Penalty.

Any person found guilty of violation of any provisions of this chapter for which another penalty is not provided, or who shall fail to observe any of the foregoing regulations, or who shall take and use utilities of the city without paying therefore in accordance with the provisions of this

chapter, or who shall connect his premises with any utility of the city without the permission of the city, shall be punished inc accordance with the applicable City municipal code.

4.15 Changes to Ordinances Automatically Become Part of Service Contract

Each and every addition or modification, alteration or amendment to and of any of the rates or rules of this PPM-W manual shall be and become binding upon, and shall form a part of the contract with each and every customer, upon the expiration of 30 days' notice thereof in writing, such notice to be provided by advertisement in the local newspaper.

4.16 Estimate of Consumption when Meters Fail to Register

(a) For metered services the city shall endeavor to have each customer's meter or meters read at approximately monthly intervals to determine the billed consumption.

(1) Water/wastewater: Water meters measure the water used in a multiple of gallons. For billing purposes, water meter readings are rounded downward to whole hundred gallons and shall be disclosed on the combined statement. For billing purposes, readings on meters installed to measure wastewater returned to the city's wastewater system are rounded downward to whole hundred gallons and shall be disclosed on the combined statement.

(b) If the meter on the customer's premises is destroyed or otherwise fails to register, the customer may be billed for the period involved on the basis of previous consumption, consumption after repair or replacement of the meter, or any other method in accordance with generally accepted utility practices which produces a reasonable estimate of consumption during the relevant period. Where it has been necessary to estimate the customer's consumption, the combined statement shall carry appropriate notice to that effect.

4.17 Private Fire Service Lines

(a) Pressure Not Guaranteed. The right is reserved by the city to shut off the supply at any time in case of accident, or to make alterations, extensions, connections or repairs and if possible the city agrees to give due and ample notice of such shut-off. The Water Utilities Department shall not make any guarantee as to a certain pressure in this pipe or in the main supplying the same, and shall not be, under any circumstances, held liable for loss or damage to the owner for a deficiency or failure in the supply of water, whether occasioned by shutting off of water in case of accident or alterations, extensions, connections or repairs, or for any cause whatsoever.

(b) Maintenance and Repair: The customer will own and maintain reduced pressure principle backflow preventers and double check valve assembly backflow preventers.

(c) Testing: Tests shall be conducted and results submitted to the Director or designee. Such tests shall be conducted after initial installation, then annually thereafter, also after repairs

on fire line installations performed or when deemed necessary by the Director or designee or Fire Marshal.

(d) Equipment Inspection. Any authorized representative of the city shall have free access to the building at any reasonable time for the purpose of inspecting any of the equipment.

(e) Violations. Violation by the owner of any of the regulations in this section shall terminate conditions as set forth in division (b)(1), (2), (3) and (4) hereof, and because of such violation, the city shall disconnect said pipe or pipes, or stop the flow of water through the same. Further, said owner may be subject to any other penalties and fines specified in chapter.

4.18 Temporary Water Service and Hydrant Meters.

(a) Temporary service, such as service for construction projects shall be rendered upon written application accompanied by a meter installation and removal charge and a deposit, in accordance with the approved fee schedule, which will be applied against the final bill. A five-eighths-inch by three-quarter-inch water meter shall be installed on all temporary construction meter installations. A backflow preventer shall be installed as part of the temporary hydrant meter installation.

(b) Hydrant Meters: At the option of the city, temporary service, such as for swimming pool filling and construction projects that, will require a water line on the customer's side of the meter larger than five-eighths-inch by three-quarter-inch may also be rendered by installing a meter on an existing fire hydrant at the site or very near to the site. Service may be rendered in this manner upon written application accompanied by a nonrefundable meter installation and removal charge and a deposit, in accordance with the approved fee schedule, which will be applied against the final bill, assuming the safe return of the meter. Water used through such a temporary meter shall be paid for at the prevailing commercial water service rate. A backflow preventer shall be installed as part of the temporary hydrant meter installation.

(c) This type of temporary connection shall be allowed for a maximum time period of 12-months but may be extended upon re-application by the customer.

(d) It shall be illegal to utilize or in any manner tamper with any fire hydrant except for employees of the fire department in performing their duties, or an employee of the city engaged in testing, installing or maintaining fire hydrants, or for connecting or disconnecting temporary fire hydrant service as defined in this section.

CHAPTER 5: RATES

5.1 Usage Outside Corporate Limits

(a) The city is hereby authorized to sell water and wastewater utility services to areas outside the corporate limits.

(b) Connection charges: Water and sewer service outside the corporate limits of the city shall be surcharged 25% above the then existing rates in accordance with F.S. 180.191(1)(a).

(c) Rates: Water and sewer service outside the corporate limits of the city shall be surcharged 25% above the then existing rates in accordance with F.S. 180.191(1)(a).

5.2 Water Rates

Water rates charged and collected for potable water furnished by the city to consumers shall be in accordance with the rates established annually by resolution of the City Commission.

Water Fees and Charges for potable water service shall be in accordance with fees and charges approved by resolution of the City Commission.

5.3 Unmetered Fire Lines (Private Fire Service Protection)

(a) The charges and surcharges or rates for special private fire service protection shall be based upon the size of the connection made to the city's distribution system in accordance with the fee schedule.

(b) Services outside the corporate limits of Lake Worth shall be surcharged 25% in accordance with F.S. Ch. 180.191(1)(a).

(c) Water used through fire service meters will be charged at meter rates, but there will be no charge for water used in case of fire. When fire line valves or connections are used in case of fire or for any other reason whatsoever, the owner shall immediately notify the Water Utilities Department.

5.4 Sale of Water in Bulk to Municipal Utilities

The city is hereby authorized to sell potable water in bulk to municipal utility providers that own water utilities located outside the potable water service area of the City through an interlocal agreement in accordance with a price schedule to be determined by the city on a case by case basis at the time such sale is initiated and included in the approved agreement. Service to entities within the City's water service areas and to private entities outside the City's water service area shall be provided by the city under retail rate structures, which are approved by Resolution of the City Commission.

5.5 Water Meters, Tampering With, Altering.

(a) Should it appear that water has been stolen by altering the pipes, altering the meter or otherwise, the Water Utilities Director or his/her designee shall have the right to

discontinue the service until the defect is corrected and the service approved by the appropriate inspector.

(b) Diversion cut-back charge. When a water meter is found to have been tampered with, service shall be subject to immediate disconnection. Before service may be restored, the estimated consumption as defined in subsection (c) of this section shall be paid by cash, postal money order or cashier's check or equivalent, or satisfactory arrangements for payment shall be made. Upon payment of the diversion cut-back charge, service shall be restored. If the customer's deposit has been previously refunded, a new deposit may be required.

(c) Estimated Consumption and Billing. When a water meter is found to have been tampered with or water has been otherwise diverted, the consumer shall be billed for the estimated water consumed, based on the rate in effect at the time of such billing. The consumption shall be estimated on the basis of previous consumption, consumption after replacement of the meter, or any other method in accordance with generally accepted utility practices which produces a reasonable estimate. In addition, the consumer shall be billed for the actual cost of the investigation of the meter tampering, including cost associated with the estimation of consumption and the labor, supplies, materials and equipment used in connection with such investigation. The consumer shall also be liable to the city for the cost of collection, including agency, attorneys' fees and court costs if the account is placed in the hands of an agency or attorney for collection or legal action because of the customer's failure to pay any amount due.

(d) Prima Facie Evidence. The presence, on property in the actual possession of the consumer where the meter tampering has occurred, of any connection, pipe, meter alteration, or device whatsoever which affects the diversion or use of water so as to avoid the registration of such use by or on a meter installed or private provided by the city shall be prima facie evidence of an intent to violate this section if:

(1) The presence of such a device or alteration can be attributed only to a deliberate act in furtherance of an intent to avoid payment for utility services.

(2) The customer charged with the violation of this section has received the direct benefit of the reduction of the cost of such utility service.

5.6 Wastewater Rates

Rates charged and collected for wastewater collection, treatment and disposal, furnished by the city to consumers shall be in accordance with rates established annually by resolution of the City Commission.

Fees and Charges for wastewater collection, treatment and disposal service shall be in accordance with fees and charges approved by resolution of the City Commission.

5.7 Irrigation Water and Other Water Consumption Not Returned to the Wastewater System

Any water customer may have the city install a separate water meter for the measurement of water not returned to the wastewater system or for irrigation purposes. The water used through this separate meter will be billed as a separate service and under the same provisions applicable to any existing water service but will not be subject to a monthly wastewater consumptive use charge or initial wastewater connection charges.

5.8 Treatment of Wastewater in Bulk from Municipalities and Utility Companies; Price Schedule

The city is hereby authorized to collect wastewater in bulk from other municipalities that own wastewater utilities located outside the City's sewer service area for transport to a wastewater treatment facility in accordance with an interlocal agreement including a price schedule to be determined by the city at the time such sale is initiated and included in the approved agreement. The sub-regional wastewater agreement with municipalities is one such acceptable agreement. Service to entities within the City's sewer service area shall be provided by the city under retail rate structures.

CHAPTER 6: DEPOSITS, CHARGES, FEES AND PENALTIES

6.1 Purpose

To establish requirements for handling security deposits, establishing deposits at account opening, providing a process for increasing deposits based upon customer account activity to ensure adequate assurance of payment, establishing applicable charges and fees and establishing appropriate penalties.

6.2 Policy

Unless otherwise exempted herein, a security deposit shall be required on all utility accounts to establish, re-establish, continue, or maintain services with the City, which shall be paid in full prior to receiving any services unless an alternative is authorized by the Director. Deposits, charges, fees and penalties, including policies related to each shall be the same as those established by the Electric Utility Department for use by the Customer Service office, as revised and as supplemented herein.

6.3 Connection Charges, Water (Meter, Distribution Line and/or Tapping) or Sanitary Sewer (Collection Line and/or Tapping)

(a) Owner/Applicant shall pay a connection charge immediately upon connection to the water distribution and/or sanitary sewer system; in the case of new construction, however, the connection charge shall be payable prior to the issuance of the certificate of occupancy.

(b) The water meter charge shall be to set or activate the water meter, and shall be charged for all new accounts.

(c) The tapping charge shall cover the costs of the tap line from the water or sewer line to the property line. If a property owner has previously been charged for the cost of such water service or sewer lateral connection, he or she shall not be required to pay such charge.

(d) The charge for the water service tap shall be in accordance with fees and charges approved by resolution of the City Commission.

(e) The charge for the sewer tap shall be based on an individual, itemized bill issued for each sewer tap, based on the total cost to the city for performing such connection, including materials, labor, cost of fringe benefits and an administrative processing fee. The labor charge shall be the actual salary paid to city workers for the actual time required to do the work. The fringe benefit costs, to cover the cost of the city employees' pension benefits, insurance and social security, shall be assessed at a flat rate of 50% of salary. An administrative processing fee shall also be assessed. The total of each of these four items shall constitute the sewer tapping charge.

(f) Connection fees for water distribution lines installed by the City to expand service shall be paid over a 10 year period as an additional charge on the water bill; established for the following conditions:

a. Water service available adjacent to property at least three years prior to connection.
b. Water service available within 1000 feet of property three years prior to connection, and piping extended adjacent to property.
c. Water service available more than 1000 feet away from property three years prior to connection, and piping extended adjacent to property.

(g) Connection fees for sewer collection lines installed by the City to expand service shall be paid over a 10 year period as an additional charge on the sewer bill; established for the following conditions:

a. Sewer service available adjacent to property at least three years prior to connection.
b. Sewer service available within 1000 feet of property three years prior to connection, and piping extended adjacent to property.
c. Sewer service available more than 1000 feet away from property three years prior to connection, and piping extended adjacent to property.

6.4 Connection/Disconnection Charge

(a) A turn-off charge shall be made in all instances where the city disconnects a utility service to a customer, except where a customer's utilities are shut off for nonpayment of a delinquent account.

(b) If a new customer turns on his or her own service without applying for service, the city shall assess the customer a tampering fee plus the cost of any damage to city property, and shall further charge the customer a disconnection fee if said customer does not submit an application for new service within five days of being notified by the city.

(c) If an established customer turns off his or her own service at the curb stop without city assistance for any reason and damages the City water facilities, the city shall assess the customer the cost of any damage to city property. Additionally, in the case of a customer who has unlawfully restored his or her service where the city identified leaks and waste of water, the customer shall be responsible for payment of the charges for all wasted water resulting from the unlawful connection.

(d) Any customer or individual who unlawfully connects into the city's utility systems by installing a bypass or by any other means shall be subject to all penalties prescribed herein and a service charge for removing the bypass or other tapping mechanism. Additionally, the city shall estimate usage and charges for the unmetered service unlawfully used and the customer or individual shall be responsible for payment of said billing.

(e) The city shall immediately disconnect any device found connected to an adjacent property owner's utility service or to any other source that is supplying a customer whose service has been disconnected due to nonpayment, leaks or wasteful use of water, and said customer shall be subject to any penalty prescribed herein and shall be charged the cost of any damage to city property. Said adjacent property owner, if found to have facilitated the illegal hook up, shall additionally be subject to discontinuation of service for unlawfully supplying utilities and shall be responsible for payment of any damage to city property.

6.5 Responsibility for Taxes or Assessments.

The customer shall be liable for any taxes or assessments that are lawfully imposed by any governmental authority on any service. Exemptions from such taxes or assessments shall be granted only by the taxing or assessing authority having jurisdiction. It shall be the customer's responsibility to secure and document such exemption on a continuous basis to the satisfaction of the city. A failure by the city to levy or collect any such tax or assessment, does not relieve the customer of the responsibility for the payment of such tax or assessment.

6.6 Penalties

(a) Except as provided in (e)(4) of this section, any violation of this PPM-W is a civil infraction.

(b) Any person who has committed an act in violation of this PPM-W shall receive a citation from any employee of the city who has probable cause to believe that the person has committed a civil infraction in violation of this PPM-W.

(c) The city shall:

(1) Accept designated fines and issue receipts therefore;

(2) Provide a uniform citation form for notifying alleged violators to appear and answer to charges of violation of this PPM-W.

(d) Violation of any provision of this PPM-W shall be punishable by a fine not to exceed an amount set by resolution of the city commission. Any person who has violated any provision of this PPM-W shall be fined an amount as follows:

(e) Any property owner violating the provisions of this PPM-W shall be deemed guilty of a civil infraction. During a one-year period, each violation shall constitute a separate offense. Each day in violation shall constitute a separate offense. Violations of these sections shall be punished in accordance with the latest edition of the city's fees and charges, as approved by resolution of the city commission.

(f) Each day in violation of this division shall constitute a separate offense. For purposes of this PPM-W, no person shall be found to have committed a repeat violation based upon a violation of the provisions of this PPM-W that occurred during a prior water shortage or water shortage emergency which is no longer in effect.

(g) Except as provided in (e)(4) of this section, any person issued a citation shall be deemed to be charged with a civil violation and shall comply with the directives on the citation.

(h) (Payment shall be made, either by mail or in person, to the city at the location and within the time specified on the citation. If a person follows this procedure, s/he shall be deemed to have admitted the infraction and to have waived his/her right to a hearing on the issue of commission of the infraction.

(i) Any person who fails to make payment within the specified period shall be deemed to have waived his/her right to pay the civil penalty as set forth in the citation.

(j) Any person who elects to appear before a hearing officer or special magistrate to contest the citation shall be deemed to have waived his/her right to pay the civil penalty. The hearing officer or special magistrate, after a hearing, shall make a determination as to whether a violation has occurred and may impose a civil penalty plus court costs.

(k) If a person fails to pay the civil penalty, or fails to appear before the hearing officer or special magistrate to contest the citation, s/he shall be deemed to have waived his/her right to contest the citation; and in such case, the hearing officer or special magistrate shall enter a fine at the time of the scheduled hearing, and the city may pursue a judgment against the violator for the maximum civil penalty.

(l) Any person cited for an infraction under this PPM-W shall sign and accept the citation indicating a promise to pay the fine or appear at a hearing before the hearing officer or special magistrate. Any person who willfully refuses to sign and accept a citation issued by an officer shall be guilty of a misdemeanor of the second degree, punishable as provided by Florida Statutes, § 775.082 or 775.083.

(m) As provided in (e)(4) of this section, a officer may require mandatory court appearances for violations resulting in the issuance of a fourth or subsequent citation to a person. The citation shall clearly inform the person of the mandatory court appearance. The city or law enforcement officer shall maintain records to prove the number of citations issued to the person. Persons required to appear in court do not have the option of paying the fine instead of appearing in court.

(n) The provisions of this PPM-W are an additional and supplemental means of enforcing this PPM-W. Nothing contained herein shall prohibit enforcement by any other means, including, but not limited to, emergency injunctive action to enforce the provisions of this PPM-W.

CHAPTER 7: RESERVE CAPACITY CHARGES

7.1 Purpose

To recover from new users of the city's water and sewer systems the proportionate share of the cost of expanding, or constructing additional water production, treatment and distribution facilities, and additional wastewater collection, treatment and disposal facilities to serve additional connections to the systems.

7.2 Types of Reserve Capacity Charges

(a) Water Reserve Capacity Charge

The Water Reserve Capacity Charge is for meeting the impacts of additional connections upon the expansion or construction of water production, treatment and distribution capital improvements to the potable water system.

(b) Sanitary Sewer Reserve Capacity Charge

The Sanitary Sewer Reserve Capacity Charge is for meeting the impacts of additional connections upon the expansion or construction of wastewater collection, treatment and disposal capital improvements to the sanitary wastewater systems.

7.3 Charge Based on Equivalent Residential Unit.

As used in this article, "ERU" shall stand for "equivalent residential unit" and shall mean the average system capacity used by a residential facility in terms of the reserved capacity needed to serve that facility. One (1) ERU is, by definition, equal to one (1) single family residence; As such for purposes herein, an "equivalent residential unit" (ERU) shall be defined as a customer with a ⅝″ x ¾″ meter. Customers with larger meter sizes shall be converted to a number of ERUs based upon meter size as follows: The same number of potable water ERUs calculated herein shall also apply to wastewater ERUs unless the sanitary flow is determined by the city to be inconsistent due to additional contributions to the wastewater stream.

Meter Size	# of ERUs
¾” x ⅝”	1
1”	2.5
1½”	5
2”	8
3”	16
4”	25
6”	50

7.4 Potable Water Reserve Capacity Charge per ERU.

A Water Reserve Capacity charge per ERU shall be imposed for new connections, by resolution of the City Commission. These charges are not refundable. The Water Reserve Capacity Charge for existing structures that connect to the water system may be paid as part of the monthly bill over a 10 year period of time after such connection.

7.5 Sanitary Sewer Reserve Capacity Charge per ERU.

A Sewer Reserve Capacity charge per ERU shall be imposed by resolution of the City Commission for new connections located on existing gravity sewers. These charges are not refundable. The Sewer Reserve Capacity Charge for existing structures that connect to the sewer system may be paid as part of the monthly bill over a 10 year period of time after such connection.

7.6 Prior Use.

In calculating the reserve capacity charges, a credit shall be applied for any prior reserve capacity charges paid for existing structures that are connected to the water or sewer system, or structures disconnected or demolished within twenty-four (24) months of application at the same location. Any credit shall apply only to the service location and shall not be transferred or applied to any other service locations. For purposes of clarification, no reserve capacity charges were collected prior to October 1, 1982, and therefore no credits for these facilities would apply.

7.7 Change in Use; Additional Capacity Charge.

Should there be a change in any of the factors upon which a reserve capacity charge is based, the owner or developer shall pay to the city, within ninety (90) days after notification, any additional reserve capacity charge required as calculated herein. If such additional payment is not made, the city water and/or sewer service may be terminated.

7.8 Time of Payment.

(a) Each owner or consumer who, acting on his own behalf or through authorized agents, makes application for a building permit for any new construction or any addition or alteration that results in additional reserve capacity necessary for the water treatment plant shall incur and pay before issuance of any such permit, in addition to the tapping charge, a water reserve capacity charge.

(1) For projects inside the City: Reserve Capacity Charges shall be payable at time of Building Permit application

(2) For projects outside the city limits Reserve Capacity Charges shall be payable at time of service application.

(b) The reserve capacity charges shall constitute a lien against the property, and the agreement shall provide for the city to record a claim of lien for said charges immediately upon execution of the agreement:

(c) The applicable reserve capacity charges shall be paid in addition to all other fees, charges and assessments due, and is intended to provide funds to pay for the fair share portion of the water utility system necessitated by system growth and expansion.

(d) Abandonment of a Project. For the purpose of this section, a project will be determined to be abandoned in accordance with the following:

(1) If capacity has been reserved pursuant to paragraph (a)(1), a project shall be deemed to be abandoned if the building permit has expired and was not renewed within 180 days of expiration;

(2) If the capacity has been reserved pursuant to paragraph (a)(2)a project shall be deemed to be abandoned if the site plan approval, including any extensions thereto for the project has expired.

7.9 Refund of Capacity Charges.

No refund or credit shall be afforded after a reserve capacity fee has already been paid.

7.10 Use of Funds.

(a) The city shall establish separate capital accounts for water and sewer reserve capacity charges collected pursuant to this article, and shall recognize such accounts separate and apart from all other accounts of the city. Immediately upon receipt, all such water reserve capacity charges received by the city shall be deposited into the water reserve capacity charge capital account, and all sewer reserve capacity charges received by the city shall be deposited into the sewer reserve capacity charge capital account.

(b) The use of all funds collected pursuant to this paragraph, as well as all similar capacity charges collected prior to the effective date of this article pursuant to Resolution Number 19-85 of the city and water and wastewater service policies of the city utilities authority, shall be used solely for the purpose providing the necessary utility facilities and improvements required by new development and growth of the water and sewer service area and shall include, but not be limited to, the following expenditures:

(1) Design or construction plan preparation;

(2) Permitting and related fees;

(3) Land acquisition, including any costs of acquisition or condemnation;

(4) Construction of water and sewer buildings, facilities, structures, or improvements and additions thereto;

(5) Relocating utilities required by the construction of buildings, facilities, structures, or improvements and additions thereto;

(6) Cost of construction management, inspection, or both;

(7) Surveying, soils and materials testing, and the evaluation and development of raw water resources and supplies;

(8) Acquisition of plant or equipment necessary or convenient to expand the water and/or sewer system; and

(9) Payment of principal and interest, reserves and costs of issuance under any bonds or other indebtedness issued by the city to fund growth-impacted improvements, and additions to the water and sewer systems.

(c) Funds on deposit in the water and sewer reserve capacity charge accounts shall not be used for any expenditures that would be classified as routine maintenance, operation or repair expenses. Expansion or upsizing of existing facilities may be considered an improvement.

(d) Any funds on deposit which are not immediately necessary for expenditure may be invested by the city. All income and earnings derived from such investments shall be deposited in the water and sewer reserve capacity charge accounts, respectively, and be used as provided herein.

CHAPTER 8: POTABLE WATER

8.1 Purpose and Policy.

The following rules and regulations for the sale and distribution of water by the city, shall hereafter be observed by the city and by consumers of water supplied by the city.

8.2 Automatic Car Washes.

The connection of automatic car washes to the city water and/or sanitary sewer system shall comply with County and City requirements that the car wash incorporates and uses a wash water recycling system of a type, design and efficiency approved by the water utilities department.

8.3 Approval of Plumbing and Connections Required.

No water service shall be connected until the plumbing and connections incident thereto shall have been inspected and approved by the building official, or his/her designee, as follows:

(a) Water Service to a Residence. Approval of a dwelling for water service must be obtained prior to initial provision of service.

(b) Water Service to Other Buildings. Approval of a building for water service must be obtained prior to initial provision of service or transfer of water service.

(c) Copy of Approval. Each applicant for new water service must submit a copy of such approval where required as part of the application for service.

8.4 Supplying Separately Owned Properties Through One Meter Prohibited

(a) Separately owned properties shall be served by separate meters. Supplying multiple properties though through one meter is prohibited. Multiple use of privately owned water systems is also prohibited.

(b) No person other than the owner/tenant of a water system located on his/her property shall be furnished with water from the water system for any purpose.

(c) This section shall not, however, prohibit single metering of property owned as a cooperative or condominium, or unless the customer is a municipal or private water utility served by a bulk meter service, as long as service is provided to and metered on common property and there is an association or corporation to apportion, collect and remit all fees and charges and accept notices. Such corporation or association shall demonstrate to the city that they have the legal authority to charge or collect from property or unit owners for the fees and charges billed.

8.5 Size of Service Connections

The Water Utilities Department in every instance reserves the right, at its option, to designate and prescribe the size of a service connection, either upon original installation of a new connection and in any case, where a size of service other than that applied for by the owner, or previously existing, is so designated and prescribed by the Department, the owner shall be bound thereby. In case the service supplying a house or building is found not to be large enough due to additions to the building or an increase in the number of fixtures, the Water Utilities Department will make the larger tap and install the larger service upon the payment of the tapping charge for the size of the new service. No credit will be given for the service already in place that is found to be insufficient in size.

8.6 Water Meter Up/Downsizing

(a) Increase in size. A customer desiring a water meter larger than the size of the water meter then in service shall pay to the city the estimate for material, labor and equipment costs plus overhead for installing the larger meter. In addition, the customer shall also pay the difference in the cost of the associated water and wastewater reserve capacity charges, if applicable, of the larger and smaller water meters.

(b) Reduction in size. A customer desiring a water meter smaller than the size of the meter then in service shall pay to the city the estimate for material, labor and equipment costs plus overhead for installing this smaller size water meter.

8.7 City Employees only to turn on water service

The city curb stop on any and all service connections shall only be used by the owner, his employees or agents for turning off the water supply. All turning on of the water supply at the meter shall be done exclusively by the city.

8.8 Authority of City to Require Owner to install Backflow Preventers or the Like on Service Connection

The city reserves the right, as necessary for public health and welfare, to require the following owners to install on his service connection at the location designated by the city, a backflow preventer or other appliances, apparatus or equipment of such type and design as is approved by the city.

(a) Residential properties with irrigation systems
(b) Residential properties with separate well systems
(c) Commercial properties
(d) Industrial properties

8.9 Duty of Consumer as to Leaks or Waste

(a) Duty of Owner or Tenant; Report to Utility Customer Service Office

(1) It shall be the duty of every owner, his or her agent or tenant, to at all times exercise due diligence to prevent the waste of water, and to this end shall immediately stop all leaks on his or her premises, and shall notify the utility customer service office promptly of any leak discovered other than upon his or her premises, thus to enable the prompt stopping thereof.

(2) Persisting in any willful waste, or neglect to promptly stop water through leaks on part of any owner, his or her agent or tenant, shall be sufficient cause to authorize the city to discontinue its service and shut off the water supply from and to the premises in question, without notice.

(3) Whenever the water supply to and for any premises has been shut off because of leaks or waste, the same shall not be turned on again until all cause for shut-off shall have been remedied or removed, and until satisfactory assurance shall be given to the city that the condition causing the shut-off will not again exist by the owner, or his or her agent or tenant, and the charge for service disconnection shall have been paid to the city to cover the cost of turning on said water supply again.

8.10 Meters to be Furnished, Installed by Water Utilities Department

(a) All meters shall be furnished and installed by the Water Utilities Department upon the application of any owner or responsible party for utility service and payment of the minimum service charge. All meters furnished and/or installed shall be and remain subject to the absolute and exclusive control of the Department.

(b) The Water Utilities Department in every instance reserves the right, at its option, to designate the location that, in the judgment of the city, will provide protection of the installation and will provide ease of access for replacement and the reading of the meter, and prescribe the size of a water meter either upon original installation of a new connection, or upon any renewal or replacement of any old connection and in any case, where a size of meter other than that applied for by the owner, or previously existing, is so designated and prescribed by the Department, the owner shall be bound thereby.

8.11 Water Meter Access

(a) In every instance of metered water supply service, the owner shall maintain the area in and around the water meter acceptable and accessible to the Water Utilities Department. Property owners who do not provide access to the meter or who do not keep physical access to the meter free and clear of debris and other obstacles so that the city can access the meter will be subject to the code enforcement citation and special hearing procedures.

(b) Once any meter has been placed, its position shall not be changed, except by the Water Utilities Department with its consent and at the cost of the owner, and in the event any owner makes any change in his premises, which in the discretion of the Department requires any change in the location of position of the meter or meter box, such change in location or position shall be made by the Department at the cost and expense of the owner.

8.12 Water Meter Repairs

Repairs, renewals and replacements of water meters and meter boxes with connections and appliances shall be made by the Water Utilities Department.

8.13 Reading of Water Meters

(a) Reading of meters shall be made monthly and if meter is in good order and has been in good condition since the last previous reading, bills shall be rendered in accordance therewith.

(b) Should the customer, at any time, question the accuracy of the reading of his or her meter, unless that reading is an estimated reading, the utility customer service office shall, upon the customer's request, reread the meter. If it is determined that the reading was correct, a meter test charge will be made for the rereading service on the next billing. In the event that the meter is found to be faulty or the reading is found to be erroneous, the customer shall not be required to pay said charge.

8.14 Testing, Changing Meters

(a) The Water Utilities Department reserves the right to routinely test or replace existing meters at any time for any reason.

(b) Meters under three inches in size. Should the owner, at any time, question the accuracy of the meter on his or her service, the Department shall, upon his or her written request, remove the meter and test it. If it is determined that the meter is functioning properly and is not over-registering by more than 1.5% (that is, the differential between billed flow and tested flow is less than 1.5% of the billed flow), the city will charge the customer a meter test fee to test the meter.

(1) As a result of the test, if it is determined that the meter is over-registering or under-registering by more than 1.5%, the customer will not be charged the service fee to test the meter.

(2) In addition, if it is determined that the meter is registering above 101.5% of accuracy (over-registering), the customer will receive a credit for the overbilling that is above the 101.5%.

(c) Meters that are three inches in or more in size. The Department shall test all meters of three inches or more in size once each year.. The Department will notify the customer at least five working days in advance of its intent to test a meter. The Department will test the meter in the field on location. If it is determined that the meter is not functioning within acceptable parameters of accuracy, the city will repair or replace the meter. Additional tests within the same annual period may be performed upon the written request of the customer at an extra cost per test.

(d) The Department reserves the right to remove and test any meter at any time, and if such meter is found to be inaccurate, to substitute another meter of the same size in its place, either permanently or temporarily. In the event of such test as last mentioned, the Department further reserves the right to make any correction in the bill rendered based on the last reading of such meter, in accordance with the result of such test.

8.15 Defective Water Meters

(a) The quantity of water recorded by the meter shall be conclusive on both the customer and the city except when the meter has been found to be defective, or ceases to register.

(b) In case the meter has been found to be defective or has ceased to register, the amount of usage to be billed for the period that the meter was not functioning properly shall be determined by taking the average monthly usage recorded by the new or repaired meter for a minimum of 90 days. The city can bill for past unbilled usage as herein determined for a period of up to 12 months.

8.16 Fire Flow; Fire Hydrants

(a) The Water Utilities Department may install, at any location on any public or private highway or thoroughfare, a standard fire hydrant or plug, having two, two and one-half-inch hose nozzle, and one four and one-half-inch nozzle, six-inch ductile-iron branch pipe and six inch isolation valve from the Department's street main, and provided further the

size of the street main and the surrounding distributing system and the available pressure on said street main and the surrounding distributing system is, in the discretion of the Department, sufficient to enable the giving of proper service at the fire hydrant under normal and ordinary conditions.

(b) All fire hydrants or plugs shall be used for fire protection purposes exclusively, unless the usage is approved by the local fire department having jurisdiction or the Department. All use of fire hydrants or plugs for sprinkling, watering, filling of other carts or receptacles, by persons other than the Fire Department or City personnel are prohibited, unless any such other use is permitted, in writing, by the Department.

CHAPTER 9: CROSS-CONNECTION CONTROL PROGRAM

9.1 Purpose

Under the rules of the Florida Department of Environmental Protection, Section 62-555.360, F.A.C., relating to cross connection, the city has the primary responsibility to prevent water from unapproved sources, or any other substances, from entering the water system. Therefore, upon detection of a prohibited cross-connection, the city is directed to either eliminate the cross-connection by requiring the installation of an appropriate backflow prevention device, or discontinue service until the contamination source is eliminated.

.

9.2 Water Utilities Department to Administer.

(a) The Water Utilities Department shall be responsible for the protection of the public potable water distribution system from contamination or pollution due to the backflow or back-siphonage of contaminants or pollutants through the water service connection.

(b) The Water Utilities Department shall establish policies and procedures to require an approved backflow prevention device at the city's water service connection if required for public safety of the water system. The Director of Water Utilities or his/her designated agent shall give notice in writing to the customer to install such an approved backflow prevention device at each service connection to his premises, if required by these policies and procedures. The customer shall immediately install such approved device or devices at his own expense; the failure, refusal, or inability on the part of the customer to install such device or devices immediately, shall constitute a ground for discontinuing water service to the premises until such device or devices have been properly installed.

(c) The Water Utilities Department shall annually complete and submit a Cross-connection Control Program Annual Report, Form 62-555.900(13), effective January 2016, in accordance with paragraph 62-555.360(2)(b) FAC. The Department shall take all necessary steps to collect and store data required to complete this report.

9.3 Interconnection of Private Water System/Irrigation Well to City Water System Prohibited.

Private water systems are prohibited from use for domestic potable water, where potable water is supplied by the City. If private water systems (wells) are used for irrigation purposes, the potable water system shall have an approved backflow device installed by the customer immediately downstream of the meter. Service of water to any premise may be disconnected by the city if a required backflow prevention device is not installed, tested and maintained. Water service will not be restored until such conditions or defects are corrected. All turn-off and turn-on service charges shall be paid by the consumer.

9.4 Backflow Prevention Devices Required

(a) Generally. The following new users of the city's water system shall install and maintain appropriate backflow prevention devices:

(1) Any user having a fire line connected to the city's water system, with the backflow prevention device to be installed in the fire line.

(2) Any user located in a building that is more than two (2) stories in height.

(3) Any commercial or industrial user.

An approved backflow prevention device shall be installed on each service line to a customer's water system at or near the property line or immediately inside the building being served and, in all cases, before the first branch line leading off the service line, whenever the above conditions exist:

(b) High-Risk Users. It is recognized that certain existing users of the city's water system may pose a high risk to the system. Accordingly, the following existing users shall, within six (6) months of receipt of notice from the city, install and maintain appropriate backflow prevention devices; the type and size to be determined by the city:

(1) Nursing homes;
(2) Hospitals;
(3) Medical offices;
(4) Dental offices;
(5) Mortuaries;
(6) Funeral parlors;
(7) Restaurants;
(8) Sewage lift stations;
(9) Automobile paint shops;
(10) Automobile body shops;
(11) Radiator repair shops;
(12) Waterfront facilities;
(13) Veterinary establishments;

(14) Manufacturing and processing plants;
(15) Car washes;
(16) Chemical plants;
(17) Film laboratories;
(18) Laundries;
(19) Dry cleaning establishments;
(20) Pest exterminating companies;
(21) Automobile filling and service stations;
(22) Schools with laboratories;
(23) Any commercial and industrial user handling, on a continuing or frequently recurring basis, corrosive, toxic, infectious, radioactive or other substances that would be a health hazard if they entered the drinking water supply;
(24) Any user located in a building that is more than two (2) stories in height; and
(25) Any user having a fire line connected to the city's water system, with the backflow prevention device to be installed in the fire line.

(c) Exemption for single-family structures. Single-family structures are exempt from the above requirements unless the city determines that a special health hazard exists.

(d) Type and size of required device. The type and size of each required backflow prevention device will be determined by the city.

(e) Grounds for termination of water service. The failure of a user of the city's water system to install or maintain backflow prevention devices as provided in this article will be grounds for termination of water service. In the case of an immediate hazard to the public health, water service may be terminated without notice, but upon request, the user will be entitled to a prompt hearing to determine the propriety of the termination.

9.5 Inspection by City

(a) The customer's system shall be open for inspection at all reasonable times to authorized representatives of the water utilities department to determine whether cross-connections or other structural or sanitary hazards, including violations of these regulations, exist. When such a condition becomes known, the Director of Water Utilities shall deny or immediately discontinue service to the premises by providing for a physical break in the service line until the customer has corrected the condition in conformance with state and city laws relating to plumbing and water supplies and the regulations adopted pursuant thereto.

9.6 Backflow Prevention Devices; When Required; Specifications.

(a) Type and size of required device. The type and size of each required backflow prevention device will be determined by the city.

(b) The term “approved backflow prevention device” shall be a device that has been manufactured in full conformance with the standards established by the American Water

Works Association and entitled “AWWA C510 Double Check Valve Backflow Prevention Assembly” or “AWWA C511 Reduced Pressure Principle Backflow Prevention Assembly” and which has met completely the laboratory and field performance specifications of the Foundation for Cross Connection Control and Hydraulic Research of the University of Southern California established by the Manual of Cross-Connection Control, 10th Edition, or the most current issue. These standards and specifications have been adopted herein.

9.7 Backflow Protection Device Testing.

(a) It shall be the duty of the customer-user at any premises where backflow prevention devices are installed, to have certified inspections and operational tests made at least once per year. These inspections and tests shall be at the expense of the customer and shall be performed by the device manufacturer's representative, by a certified tester or plumber approved by the state for such purpose.

(b) If a user of the city's water system fails to have a required backflow prevention device tested within thirty (30) days of receipt of notice from the city, the city may issue a second notice to have the device tested.

9.8 Backflow Protection Device Repair

(a) If a backflow prevention device fails a test required by this section, the user of the city's water system who is responsible for the proper operation of the device shall, within fourteen (14) days of receipt of notice of such failure, have it repaired and submit certification of proper operation to the city.

(b) These devices shall be repaired, overhauled, or replaced at the expense of the customer-user whenever such devices are found to be defective. Records of such tests, repairs and overhauls, shall be submitted to the Water Utilities Director or designee.

9.9 Notice of Violation; Failure to Remedy; Termination of Service

The Director or designee, shall notify the owner or authorized agent of the owner of the building or premises in which there is found a violation of this chapter, of such violation. The director shall set a reasonable time for the owner to have the violation removed or corrected (thirty (30) days maximum, or as determined by degree or hazard. On failure of the owner to have the violation corrected by the end of a specified time interval, the director may, if in his judgment an imminent health hazard exists, cause the water service to the building or premises to be terminated and/or charge additional fees provided in applicable resolutions approving fees and charges.

CHAPTER 10: CONSERVATION PROGRAMS

10.1 Conservation Policy.

(a) It is the policy of the city to reduce the consumption of fresh raw water required to provide adequate, safe, economic, reliable and environmentally sound potable water utility services. It is also the policy of the city to develop and provide cost effective services, information, and incentives which will reduce the consumption of and demand on potable water utility resources by consumers.

(b) The Water Utilities Director or his/her designee may designate procedures for the provision of financial incentives through rate structures to utility customers encouraging the wise use of potable water and the installation of conservation measures, which are consistent with the water conservation policies and objectives of the city. Financial incentives through rate structures may also be used to encourage conservation measures within the city's water utility system service area outside municipal boundaries.

CHAPTER 11: EMERGENCY WATER USE, WATER RESTRICTIONS AND THE WATER SHORTAGE PLAN

11.1 Intent and Purpose.

It is the intent and purpose of this chapter to protect the water resources of the city from the harmful effects of over-utilization during periods of water shortage and allocate available water supplies by assisting the South Florida Water Management District in the implementation of its water shortage plan.

11.2 Applicability.

The provisions of this chapter shall apply to all persons using the water resource within the geographical areas subject to the “water shortage” or “water shortage emergency”, as determined by the district, whether from public- or privately-owned water utility systems, private wells or private connections with surface water bodies. This chapter shall not apply to persons using only salt water.

11.3 Water-Use Restrictions Phases (Levels)

The District has established specific water-use restrictions according to the severity of the water shortage – Phase I, moderate; Phase II, severe; Phase III, extreme; and, Phase IV, critical. Each level requires an increasingly larger reduction in water use. The District correlates each phase of the restrictions to the overall percentage of reductions needed.

(a) Phase I, Moderate: Phase I water restrictions require water users to limit outdoor water use. Residential irrigation water uses are generally limited to three days per week. These

actions have a goal to produce a 15 percent reduction in overall demand on our water resources by all users.

(b) Phase II, Severe: Phase II water restrictions require water users to limit outdoor water use. Residential irrigation water uses are generally limited to two days per week. These actions have a goal to produce a 30 percent reduction in overall demand on our water resources by all users.

(c) Phase III, Extreme: Phase III water restrictions require water users to limit outdoor water use. Residential irrigation water uses are generally limited to one day per week. These actions have a goal to produce a 45 percent reduction in overall demand on our water resources by all users.

(d) Phase IV, Critical: Phase IV water restrictions require water users to limit outdoor water use. Residential irrigation water uses are generally not allowed. These actions have a goal to produce a 60 percent reduction in overall demand on our water resources by all users.

11.4 Declaration of Water Shortage or Water Shortage Emergency.

The declaration of a water shortage or water shortage emergency within all or any part of the county by the governing board or the executive director of the district shall invoke the provisions of this article. Upon such declaration, all water use restrictions or other measures adopted by the district applicable to the city, or any portion thereof, shall be subject to enforcement action pursuant to the Code. Any violation of the provisions of chapter 40E-21, Florida Administrative Code, or any order issued pursuant thereto, shall be a violation of the Code.

11.5 System-Based Water Shortages.

The city manager may declare a water shortage and impose water restrictions in accordance with the district's water shortage plan, when necessary to curtail water use within the city water system due to a mechanical failure or other operational problem with said system.

11.6 Permanent Restrictions on Lawns and Landscaping Irrigation

For the purpose of permanent restrictions on lawns and landscaping irrigation, the City of Lake Worth shall be considered under Phase I Modified (three day per week) restrictions as defined herein and by the most updated detailed restrictions imposed by South Florida Water Management District.

11.7 Enforcement

Residential and commercial water restrictions are mandatory and are enforced by South Florida Water Management District staff, local governments and law enforcement agencies. Every sheriff’s deputy having jurisdiction in the area governed by this chapter shall, in connection with all other duties imposed by law, diligently enforce the provisions of this chapter. In addition, the

City Manager may also delegate enforcement responsibility for this chapter to agencies and departments of city government in accordance with state and local law.

Violations of water restrictions may be reported to local law enforcement or city code enforcement personnel. If you choose to notify the local law enforcement agency, please call their non-emergency number

CHAPTER 12: WASTEWATER (SANITARY SEWERAGE) UTILITY SERVICE

12.1 Purpose and Policy.

To set forth uniform requirements for users of the city wastewater system (local sewer), the subregional wastewater collection system (regional sewer) and the East Central Regional Wastewater Treatment Facility (ECR) and to enable the city and the ECR to comply with all applicable State and Federal laws, including the Clean Water Act and Rule 62-625, F.A.C. (Pretreatment Requirements for Existing and Other Sources of Pollution). The objectives of this article are:

(a) To prevent the introduction of pollutants into the wastewater facilities that will interfere with its operation;

(b) To prevent the introduction of pollutants into the wastewater facilities that will pass through the wastewater facilities without adequate treatment and receiving waters, or otherwise be incompatible with the wastewater facilities;

(c) To protect wastewater facility personnel who may be affected by the wastewater in the course of their employment;

(d) To promote reuse and recycling of industrial wastewater and sludge from the wastewater facilities;

(e) To prevent the introduction of pollutants into the waters of the state from private wastewater facilities;

(f) To provide for fees for the equitable distribution of the cost of operation, maintenance, and improvement of the wastewater facilities; and

(g) To enable the City of West Palm Beach, which holds the National Pollutant Discharge Elimination System permit on behalf of the ECR, to comply with the NPDES permit conditions, sludge use and disposal requirements, and any other federal or state laws to which the wastewater facilities are subject.

12.2 Public Information

Information and data on a user obtained from reports, surveys, wastewater discharge permit applications, wastewater discharge permits, and monitoring programs, and from the director's inspection and sampling activities, shall be available to the public without restriction, unless the user specifically requests, and is able to demonstrate to the satisfaction of the director, that the release of such information would divulge information, processes, or methods of production entitled to protection as trade secrets under applicable state law. Any such request must be asserted at the time of submission of the information or data. When requested and demonstrated by the user furnishing a report that such information should be held confidential, the portions of a report which might disclose trade secrets or secret processes shall not be made available for inspection by the public, but shall be made available immediately upon request to governmental agencies for uses related to the NPDES program or pretreatment program, and in enforcement proceedings involving the person furnishing the report. Wastewater constituents and characteristics and other "effluent data" as defined by 40 CFR 2.302 will not be recognized as confidential information and will be available to the public without restriction.

12.3 Use of public sewers required- See requirements of Chapter 18, Municipal Code

12.4 Suitable Toilet Facilities Required.

(a) Buildings and establishments shall be provided by the owner thereof, with at least one flush toilet as required by Chapter 64E, FAC. All flush toilets shall be kept clean and in a sanitary working condition.

(b) All owners, as defined herein, are hereby required, at their expense, to install suitable toilet facilities.

(c) Flush toilets shall be provided at all times with sufficient running water under pressure to flush the toilet clean after each use.

(d) No person shall dispose of human excrement except in a flush toilet.

(e) It shall be unlawful to discharge to any natural outlet within the city, or in any area under the jurisdiction of said city, any wastewater or other polluted waters, except where suitable treatment has been provided in accordance with provisions of this chapter.

12.5 Powers and Authority of Inspectors.

(a) Authorized representatives of the city, the FDEP, and the EPA bearing proper credentials shall be permitted to enter upon any property without prior notification for the purpose of inspection, observation, measurement, sampling, testing review and/or photocopying of records, or investigation as may be necessary in the enforcement of this chapter. Entry shall be made during daylight or operating hours unless abnormal or emergency circumstances require otherwise.

(b) The city may seek issuance of a search warrant(s) from any court of competent jurisdiction for the following reasons:

(1) Refusal of access to a building, structure or property or any part thereof.

(2) If the city is able to demonstrate probable cause to believe that there may be a violation of this article.

(3) If there is a need to inspect and/or sample as part of a routine inspection and sampling program of the city.

(4) To protect the public health, safety and welfare of the city.

12.6 Authority to Refuse/Disconnect Service.

The city reserves the right to terminate wastewater disposal services and disconnect a customer from the system when:

(a) Acids or chemicals damaging to wastewater facilities are released into the sewer causing rapid deterioration of these structures or interfering with proper conveyance and treatment of wastewater;

(b) A governmental agency informs the city that the effluent from the wastewater treatment plant is no longer of a quality permitted for discharge into a watercourse, and it is found that the customer is delivering wastewater to the city's system that cannot be sufficiently treated or requires treatment that is not provided by the city as normal domestic treatment; or

(c) The customer:

(1) Discharges industrial waste or wastewater that is in violation of the permit issued by the approving authority,

(2) Discharges wastewater at an uncontrolled, variable rate in sufficient quality to cause an imbalance in the wastewater treatment system.

(3) Discharges wastewater from a commercial or industrial customer, which contains excessive quantities of fats, oils or grease that may cause sewer backups or cause problems for the wastewater treatment system.

(4) Fails to pay monthly bills for water and sanitary sewer services when due, or

(5) Repeats a discharge of prohibited wastes into public sewers.

12.7 Depositing Objectionable Wastes on Public and Private Property.

See requirements of Chapter 18, Municipal Code.

12.8 Discharge Prohibited to Sanitary Sewer System.

(a) No person shall discharge or cause to be discharged any unpolluted waters such as exterior foundation drains, or untreated cooling water to any sanitary sewer.

(b) No person shall discharge or cause to be discharged any stormwater, groundwater, roof runoff, subsurface drainage, to any sanitary sewer. No person shall make connection of roof downspouts, area drains or other sources of surface run-off or groundwater to a building sewer or building drain which in turn is connected directly or indirectly to the public sanitary sewer system.

(c) No person shall discharge or cause to be discharged any of the following described wastes to any public sewers:

(1) Any gasoline, benzene, naphtha, fuel oil, or other flammable or explosive liquid, solid, or gas.

(2) Any waters containing toxic or poisonous solids, liquids or gases in sufficient quantity, either singly or by interaction with other wastes, to injure or interfere with any waste treatment process, constitute a hazard to humans or animals, create a public nuisance, or create any hazard in the receiving waters of the wastewater treatment plant.

(3) Any waters or wastes having a pH lower than 5.5 or greater than 9.0, or having any other corrosive property capable of causing damage or hazard to structures, equipment, and personnel.

(4) Solid or viscous substances in quantities or of such size capable of causing obstruction to the flow in sewers, or other interference with the proper operation of the wastewater facilities such as, but not limited to, ashes, bones, cinders, sand, mud, straw, shavings, metal, glass, rags, feathers, tar, plastics, wood, unground garbage, whole blood, paunch manure, hair and fleshings, entrails and paper dishes, cups, milk containers, etc., either whole or ground by garbage grinders.

(d) All such existing connections shall be removed and corrected at the expense of the user.

12.9 Discharging into Natural Outlets.

See requirements of Chapter 18, Municipal Code.

CHAPTER 13: INDUSTRIAL PRETREATMENT PROGRAM

13.1 Purpose

To regulate industrial waste pretreatment facilities and discharge of industrial waste into the East Central Regional Wastewater Reclamation Facility and providing for pollutant limitations, data collection, monitoring, and sampling, and providing for penalties for the violation thereof for the following purposes:

(a) To prevent the introduction of pollutants into the city's wastewater system which will interfere with the normal operation of the wastewater collection system or the wastewater treatment plant, or which will contaminate the resulting municipal sludge;

(b) To prevent the introduction of pollutants into the city's wastewater collection system which do not receive adequate treatment by the ECRWRF, and which will pass through the system into receiving waters or the atmosphere or otherwise be incompatible with the system;

(c) To protect the Wastewater Facility workers and the general public;

(d) To provide for fees for the equitable distribution of the costs of operation, maintenance, and improvement of the Wastewater Facility;

(e) To improve the opportunity to recycle and reclaim wastewater and sludge from the system; and

(f) To enable the city to comply with its National Pollutant Discharge Elimination System permit conditions, sludge use and disposal requirements, and any other federal or state laws to which the ECRWRF is subject.

13.2 Policy

The policy is established that the provisions of this chapter will be enforced to the fullest extent possible under the provisions of Federal Pretreatment Regulations 40 CFR Part 403 and Florida Administrative Code Rules, 62-302, 62-600, 62-604, 62-610, and 62-625 issued by the Florida Department of Environmental Protection, and the Industrial Pretreatment Program administered on behalf of the ECRWRF by the City of West Palm Beach. The standards set forth are minimum requirements to ensure the general health and welfare of the public. Except as otherwise provided herein, the City of West Palm Beach shall administer, implement, and enforce the provisions of this chapter as controlling authority of the ECRWRF.

13.3 Compliance with Provisions or More Stringent Regulations.

The more stringent of ECRWRF, State or Federal requirements and limitations on discharges shall apply in any case where they are more stringent than requirements and limitations or those in this chapter.

13.4 Prohibited Discharge Standards.

Users shall not discharge pollutants into the ECRWRF unless in accordance with this chapter and Chapter 18 of the Municipal Code.

Discharge prohibitions. No user shall discharge into the WWF any waste or wastewater which may cause pass-through or interfere with the operation or performance of the WWF. No user shall discharge into the WWF or any waste or wastewater containing any of the following:

(1) Toxic or poisonous substances, chemical elements or compounds, taste or odor-producing substances, or any other substances which are not amenable to treatment or reduction by the wastewater treatment processes employed by the ECRWWTF. Toxic pollutants shall include, but not be limited to, any pollutant identified pursuant to 40 CFR Part 116(4).

(2) Noxious, or malodorous solids, liquids, or gases or other wastewater which, either singly, or by interaction with other waste or wastewater:

a. Are capable of creating public nuisance or hazard to human or animal life,
b. Are or may be sufficient to prevent entry into a sewer for its maintenance, inspection, or repair, or
c. May create any hazard in the receiving waters of the ECRWWTF.

(3) Liquids, solids, or gases which by reason of their nature or quantity are or may be sufficient either alone or by interaction with other substances to cause fire or explosion or be injurious in any other way to the WWF or to its operation. Prohibited materials include but are not limited to, petroleum oil and non-biodegradable cutting oil, pollutants with a closed cup flashpoint of less than one hundred forty (140) degrees Fahrenheit [sixty (60) degrees Centigrade], as determined by a Pensky-Martens Closed Cup Tester, using the test method specified in ASTM Standard D-93-79 or D-93-80k or a Setaflash Closed Cup Tester, using the test method specified in ASTM Standard D-3278 and pollutants which cause an excess of ten (10) percent of the lower explosive limit (LEL) at any point in the WWF, Specific products include, but are not limited to; gasoline, kerosene, fuel oil, motor oil, naphtha, benzene, toluene, xylene, ethers, alcohols, ketones, aldehydes, peroxides, chlorates, perchlorates, bromates, carbides, hydrides, and sulfides or any other substance which the city, the state, or any federal agency has determined is a fire hazard or hazard to the WWF.

(4) Radioactive wastes or isotopes of such half-life or concentration as may exceed limits established by regulations within the F.A.C. issued by the Florida

Department of Health and Rehabilitative Services and which will or may cause damage or hazards to the WWF or its operating personnel.

(5) Storm water, surface water, groundwater, artesian well water, roof runoff, subsurface drainage, swimming pool discharges, uncontaminated cooling water, unpolluted industrial process waters, air-conditioning condensate, unless specifically authorized by the city in writing.

(6) Domestic wastes from septic tanks, portable toilets, or other similar facilities, unless approved by the control authority in writing. Such discharges shall only be made at a site approved by the control authority.

(7) Mineral oil in excess of fifty (50) mg/L or animal/vegetable fats, wax, grease, or oils in excess of one hundred (100) mg/L, whether emulsified or not; or substances which may solidify or become viscous at temperatures lower than or equal to one hundred fifty (150) degrees Fahrenheit.

(8) All trucked or hauled pollutants are prohibited except at discharge points designated by the city.

(9) Inert suspended solids (such as, but not limited to, Fullers earth, lime slurries, and lime residues) or dissolved solids (such as, but not limited to, sodium chloride and sodium sulfate) in such concentrations as to pass through or cause interference with the operations of the WWF.

(10) Waste or wastewater having a pH lower than 5.5 exhibiting any corrosive property which either singly or by interaction with other wastes is capable of causing damage or hazard to structures, processes, equipment, or personnel of the WWF.

(11) Waste or wastewater having a pH higher than 9.5 which either singly or by interaction with other wastes is capable of causing damage or hazard to structures, processes, equipment or personnel of the WWF.

(12) BOD, COD, or chlorine in such concentration and/or flow as to constitute a significant load on or shock to the ECRWWTF or cause interference.

(13) Volume of flow or concentrations of wastes constituting "slugs" as defined herein.

(14) Liquid or vapor having a temperature higher than one hundred fifty degrees Fahrenheit (150° F) or that causes influent temperature to the ECRWWTF to

exceed one hundred four degrees Fahrenheit (104° F), except where higher temperatures are required by law.

(15) Solid or viscous substances in such quantities or of such size as to be capable of causing obstruction to the flow in a sewer, or other interference with the proper operation of any connected system, such as but not limited to; particles greater than one-half (½) inch in any dimension, grease, uncomminuted food wastes, animal entrails or tissues, paunch manure, bones, hair, hides or fleshings, whole blood, feathers, ashes, cinders, sand, spent lime, stone or marble dust, metal, glass, straw, shavings, grass clippings, rags, spent grains or hops, waste paper, wood plastics, rubber stoppers, tar asphalt residues from refining or processing of fuel or lubricating oil, gasoline, naphtha, and similar substances either whole or ground.

(16) Excessive discoloration which cannot be removed by the treatment process, such as but not limited to dye, printing wastes, and vegetable tanning solutions which imparts color to the ECRWWTF effluent thereby violating the NPDES permit held by the City of West Palm Beach on behalf of ECRWWTF. The discoloration (in combination with turbidity) shall not cause the ECRWWTF effluent to reduce the depth of the compensation point for photosynthetic activity by more than ten (10) percent from the seasonably established norm for aquatic life.

(17) Medical wastes, except as authorized by the city in a permit.

(18) Detergents, surface-active agents, or other substances which may cause excessive foaming in the WWF.

(19) Any sludges, screenings, or other residuals from the pretreatment of industrial wastes.

(20) Toxic gases, vapors, or fumes in a quantity that may cause acute worker health and safety problems.

(a) *Compliance with national and local standards.* It shall be unlawful for any person to discharge any pollutant into the WWF except when such discharge is in compliance with federal standards promulgated pursuant to the Act, and any other more stringent state and local standards. Wastes containing concentrations in excess of the National Categorical Pretreatment Standards are prohibited.

(b) Local pretreatment standards. Any wastes containing concentrations in excess of the local pretreatment standards included in the PPM-W are prohibited.

(c) Right of revision. The city reserves the right to establish, by ordinance or in permits, more stringent limitations or requirements on discharges to the ECRWRF if deemed necessary to comply with the requirements of this article.

(d) Dilution. No user shall ever increase the use of process water, or in any way attempt to dilute a discharge, as a partial or complete substitute for adequate treatment to achieve compliance with the limitations unless expressly authorized by an applicable Federal Categorical Pretreatment Standard, or in any other pollutant-specific limitation developed by the state. The control authority may impose mass limitations on users which are using dilution to meet applicable pretreatment standards or requirements, or in other cases when the imposition of mass limitations is appropriate.

(e) Septic and industrial waste hauling.

(1) Septic tank waste may be introduced into the ECRWRF only at the septic receiving station located at the ECRWRF.

(2) Any industrial or septic waste haulers shall have a discharge permit issued under conditions specified herein.

(3) No hauled load may be discharged without prior written consent from the city. Samples may be collected from each load to ensure compliance with applicable standards. The industrial or septic waste hauler may be required to provide waste analysis of any load prior to discharge.

(4) Industrial and septic waste hauler must provide a waste tracking form for every load. The form shall include, at a minimum, the name and address of the waste hauler, permit number, truck identification, names and addresses of sources of waste, volume and characteristics of waste. This form shall identify the type of industry known or suspected waste constituents and whether any wastes are RCRA hazardous wastes.

(f) Control of discharge. If any wastes or wastewaters are discharged, or are proposed to be discharged, to the ECRWRF which contain the substances or possess the characteristics enumerated in section 18-20 as prohibited by this article, does not meet applicable pretreatment standards and requirements, and/or which may have a deleterious effect upon the ECRWRF, its processes, equipment, or receiving waters, or which otherwise create a hazard to life or constitute a public nuisance, the city may:

(1) Reject the wastes or deny or condition the introduction of new sources of wastewater to the ECRWRF; or

(2) Require the industrial user to demonstrate that in-plant improvements will modify the discharge to such a degree as to be acceptable; and/or

(3) Require pretreatment of the industrial user's discharge to ensure compliance with this article; and/or

(4) Require payment of an industrial waste surcharge to cover the added cost of handling and treating excess loads imposed on the ECRWRF by such discharge. These special surcharges shall be approved by the city as stated in the existing schedule of rates and fees to the ECRWRF. Approval of industrial waste surcharges for the recovery of treatment costs does not replace or supersede the requirements for pretreatment facilities, should they be found necessary by the city.

13.5 Pretreatment.

(a) Local pretreatment standards. Any wastes containing concentrations in excess of the local pretreatment standards defined in this chapter are prohibited:

PARAMETER	MAXIMUM ALLOWABLE CONCENTRATION DURING A 24-HOUR PERIOD (mg/L)
Aluminum	16.0
Ammonia	50.0
Antimony	0.2
Arsenic	0.45
Barium	3.0
Beryllium	8.8
Biochemical Oxygen Demand (BOD)	400.0
Bismuth	0.05
Cadmium	0.32
Carbonaceous Biochemical Oxygen Demand (CBODs)	400.0
Chloride	600.0
Chemical Oxygen Demand (COD)	800.0
Chromium Total	30.00
Cobalt	1.0
Cooper	11.00
Cyanide	1.80
Cyanide Amendable to Chlorination	0.5
Hydrogen Sulfide	5.0
Iron	10.0
Lead	1.90
Manganese	1.0

Mercury	0.07
Molybdenum	0.80
Nickel	2.99
Oil, and Grease	100.0
Petroleum Hydrocarbons	15.0
pH (Standard Units)	5.5 9.5
Phenol	5.0
Phenolic Compound	0.5
Selenium	1.25
Silver	4.10
Strontium	0.2
Temperature (F)	150.0
Tin	0.6
Total Suspended Solids	400.0
Zinc	2.70

The above limits apply at the point where the wastewater is discharged to the ECRWRF. The control authority may impose mass limitations, instantaneous maximum limitations, maximum monthly average values, or maximum four-day average values, in addition to, or in place of, the limitations listed above.

(b) Pretreatment facilities. Users shall provide wastewater treatment as necessary to comply with Article 18 of the Municipal Code and this Chapter. Users shall achieve compliance with all categorical pretreatment standards, local limits, and the prohibitions set out in this article within the time limitations specified by EPA, the state or the city, whichever is more stringent. Any pretreatment facility shall be provided, operated, and maintained at the user's sole cost and expense. Detailed plans prepared by a registered engineer in the state describing such facilities and operating procedures must be approved in writing by the city before such facilities are constructed. The review and approval of such plans and operating procedures shall not relieve user from the responsibility of modifying such facilities as necessary to produce a discharge in compliance with this article.

(c) Additional pretreatment measures.

(1) Whenever deemed necessary, the city may require users to restrict their discharge during peak flow periods, designate that certain wastewater be discharged only into specific sewers, relocate and/or consolidate points of discharge, separate sewage waste streams from industrial waste streams, and such other conditions as may be necessary to protect the ECRWRF and determine the user's compliance with the requirements of this article.

(2) The city may require any person discharging into the ECRWRF to install and maintain, on their property and at their sole cost and expense, a suitable storage and flow-control facility to ensure equalization of flow. A permit may be issued solely for flow equalization.

(3) Users with the potential to discharge flammable substances shall be required to install and maintain an approved combustible gas detection meter.

(4) All records relating to compliance with the referenced pretreatment standards shall be made available to the city, the state, and the EPA for examination and duplication upon request at no charge.

(d) Pretreatment facilities - approval. If the city permits the pretreatment or equalization of waste flows, the design and installation of the equipment shall be subject to the review and approval of the city, and subject to the requirements of all applicable codes, ordinances, and laws.

(e) Pretreatment facilities - maintenance. Where preliminary treatment or flow equalizing facilities are provided for any waters or wastes, they shall be maintained continuously in satisfactory and effective operation by the owner at the owner's expense.

13.6 Other Interceptors/Traps.

Sand and/or lint interceptors shall be provided when, in the opinion of the city, they are necessary for the proper handling of liquid wastes containing excessive amounts of grit material or lint, except that such interceptors shall not be required for private living quarters or dwellings or dwelling units. All interceptors shall be of a type and capacity approved by the city, and shall be located as to be readily and easily accessible for cleaning and inspection. The minimum size of interceptors shall be in conformance with the FBC Plumbing Code.

13.7 Measurements/Tests.

(a) Measurements, tests. All measurements, tests, and analyses of the characteristics of waters and wastes to which reference is made in this chapter shall be determined in accordance with the latest edition of "Standard Methods for the Examination of Water and Wastewater," Published by the American Public Health Association; shall be determined at the control manhole provided upon suitable samples taken at the control manhole; and shall be carried out by customarily accepted methods to reflect the effect of constituents upon the sewage works and to determine the existence of hazards to life, limb, and property. (The particular analyses involved will determine whether a 24 hour composite of all outfalls of a premise is appropriate or whether a grab sample or samples should be taken. Normally, but not always, BOD and suspended solids analyses are obtained from 24 hour composites of all outfalls whereas pHs are determined from periodic grab samples.)

(b) Control manhole. When required by the city, the owner of any property serviced by a building sewer carrying industrial wastes shall install a suitable control manhole together with such necessary meters and other appurtenances in the building sewer to facilitate observation, sampling, and measurement of the wastes. Such manhole, when required, shall be constructed in accordance with plans approved by the city. The manhole shall be

installed by the owner at his/her expense, and shall be maintained by the owner so as to be safe and accessible at all times.

13.8 Uncontrolled Discharges.

(a) Each user shall provide the city protection from uncontrolled discharge of prohibited materials or other substances regulated by this chapter.

(b) In the case of an uncontrolled discharge, it is the responsibility of the user to immediately telephone and notify the ECRWRF of the incident. The notification shall include location of discharge, type of waste, concentration and volume, and corrective actions.

(c) Within five days following a slug discharge, the user shall submit to the Control Authority a detailed written report describing the cause of the discharge and the measures to be taken by the user to prevent similar future occurrences. Such notification shall not relieve the user of any expense, loss, damage, or other liability which may be incurred as a result of damage to the POTW, fish kills, or any other damage to person or property, nor shall such notification relieve the user of any fines, civil penalties, or other liability which may be imposed by this chapter or other applicable law.

(d) A notice shall be permanently posted on the user's bulletin board or other prominent place advising employees whom to call in the event of a dangerous discharge. Employers shall ensure that all employees who may cause or suffer such a dangerous discharge to occur are advised of the emergency notification procedure.

(e) Accidental uncontrolled discharge control plans. All IPP facilities, shall, to prevent uncontrolled discharges of prohibited materials, provide and maintain at the owner's cost and expense an accidental uncontrolled discharge control plan. Detailed plans showing facilities and operating procedures to provide this protection shall be submitted to the city for review, and shall be approved by the city before construction of the facility. At least once every two (2) years, the Control Authority shall evaluate whether to require each significant industrial user to adopt an accidental discharge/slug control plan. Alternatively, the Control Authority may develop such a plan for any user. Review and approval of such plans and operating procedures shall not relieve the industrial user from the responsibility to modify the user's facility as necessary to meet the requirements of this chapter. An accidental uncontrolled discharge control plan shall address, at a minimum, the following:

(1) Description of discharge practices, including non-routine batch discharges;

(2) Description of all stored chemicals;

(3) Procedures for immediately notifying the city of any accidental or uncontrolled discharge; and

(4) Procedures to prevent adverse impact from any accidental or uncontrolled discharge. Such procedures include, but are not limited to, inspection and maintenance of storage areas, handling and transfer of materials, loading and unloading operations, control of plant site runoff, worker training, building of containment structures or equipment, measures for containing toxic organic pollutants, including solvents, and/or measures and equipment for emergency response.

13.9 Industrial Wastewater Discharge Permit.

(a) An Industrial Wastewater Discharge Permit shall be obtained as required by Article 18 of the Municipal Code and this PPM-W which shall govern in all respects.

(b) *Application for discharge permit.*

(1) It is unlawful to discharge industrial waste without a permit. Any violation of the terms and conditions of a permit shall be deemed a violation of this division and shall subject the permit holder to sanctions set out in sections 18-50 and 18-51. Obtaining a permit does not relieve a permittee of its obligation to comply with all federal and state pretreatment standards or requirements or with any other requirements of federal, state, and local law. The city may require other users, including liquid waste haulers and non-discharging users to obtain permits as necessary to carry out the purposes of this division.

(2) All prospective users must submit to the city the application fee and information on the nature and characteristics of their wastewater by completing a permit application/wastewater survey at least one hundred and eighty (180) days prior to the date upon which any discharge will begin. The city is authorized to prepare a form for this purpose and may periodically require users to update the survey. Information to be provided with the survey may include description of the industrial activity, specifications of the constituents inherent to the processes and wastes, identification of the wastewater characteristics, plumbing diagrams, location of sampling points, number of employees and hours of operation, and any other information deemed necessary by the city to evaluate the permit application. Failure to complete this survey shall be reasonable grounds for terminating service to the user and shall be considered a violation of this division.

(3) Within ninety (90) days of receipt of a complete permit application, the city will determine whether or not to issue a permit. The city may deny any application for a permit.

(4) All users which discharge industrial waste into the WWF prior to the effective date of this division are granted temporary authority to continue to discharge in

compliance with the existing codes, regulations, and policies of the city. Those users who wish to continue such discharges, shall apply for a permit within ninety (90) days after the effective date of this division. The user shall not cause or allow discharges to the WWF to continue after one hundred eighty (180) days of the effective date of this division, except in accordance with a permit issued by the city.

(c) *Application signatories and certification.* All permit applications and user reporting must be signed by an authorized representative of the user and contain the following certification statement:

"I certify under penalty of law that this document and all attachments were prepared under my direction or supervision in accordance with a system designed to assure that qualified personnel properly gather and evaluate the information submitted. Based on my inquiry of the person or persons who manage the system, or those persons directly responsible for gathering the information, the information submitted is, to the best of my knowledge and belief, true, accurate, and complete. I am aware that there are significant penalties for submitting false information, including the possibility of fine and imprisonment for knowing violations."

All categorical industrial users must comply with the signatory requirements of Rule 62-625.600(11) F.A.C.

(d) *Permit issuance process.*

(1) Permits shall be expressly subject to all provisions of this division and all other applicable regulations. The cost of said permit shall be incurred by the user in accordance with the fee schedule as approved by resolution of the City Commission.

(2) Permit duration shall not exceed five (5) years from the date of issuance and upon expiration of same, a renewal permit may be issued which shall be effective for an additional five (5) years provided that the conditions of the existing permit have not changed and the appropriate renewal fees have been paid. The permit shall be displayed by the user in a location at the permitted facility so as to be seen and read by the general public.

(3) Permits shall contain at a minimum, the following conditions:

a. A statement that indicates permit duration;
b. A statement of non-transferability;

c. Pretreatment standards and effluent limits applicable to the user based on applicable standards in federal, state and local law;

d. Self monitoring, sampling, reporting, notification, and record keeping requirements;

e. Statement of applicable civil, criminal, and administrative penalties for violation of pretreatment standards and requirements.

(4) Permits may contain the following additional comments:

a. The unit charge or schedule of user charges and fees for management of the wastewater to be discharged to the WWF.

b. Limits on the instantaneous, daily, monthly average and/or four-day maximum concentration, mass, or other measure of identified wastewater constituents and characteristics;

c. Limits on the average and/or maximum rate and time of discharge and/or requirements for flow regulations and equalization;

d. Requirements for installation and maintenance of inspection facilities, and flow metering and sampling equipment;

e. Requirements for the installation of pretreatment technology, pollution control, or construction of appropriate containment devices, designed to reduce, eliminate, or prevent the introduction of pollutants into the WWF;

f. Development and implementation of spill control plans or other special conditions including management practices necessary to adequately prevent accidental, unanticipated, or routine discharges;

g. Development and implementation of waste minimization plans to reduce the amount of pollutants discharged to the WWF;

h. A statement that compliance with the permit does not relieve the permittee of responsibility for compliance with all applicable federal and state pretreatment standards, including those which become effective during the term of the permit;

i. Other conditions as deemed appropriate by the city to ensure compliance with this division, and federal and state laws, rules, and regulations.

(e) *Compliance schedules.* If additional pretreatment and/or operation and maintenance will be required to meet the pretreatment standards, the user shall submit to the city for approval and incorporation in the permit the shortest schedule by which the user is to provide additional pretreatment. The completion date in this schedule shall not be later than the compliance date established for the applicable pretreatment standards. The compliance schedule shall meet the requirements set out in this PPM-W.

(f) *Permit transfer.* Permits are issued to a specific user for a specific operation. A permit may not be reassigned, transferred or sold to a new owner or new user unless the permittee gives at least ninety (90) days advance written notice to the city and the city approves the permit transfer. The notice to the city shall include a written certification by the new owner and/or user that:

(1) States that the new owner and/or user has no immediate intent to change the facility's operations and processes;

(2) Identifies the specific date on which the transfer is to occur;

(3) Acknowledges full responsibility for complying with the terms and conditions of the existing permit.

Failure to provide advance notice of a transfer renders the permit voidable on the date of facility transfer.

(g) *Permit appeal.*

(1) The city shall provide public notice of the issuance of a permit. Any person, including the user, may petition the water utilities director to reconsider the terms of a permit within fifteen (15) days of its issuance. Failure to submit a timely petition for review shall be deemed to be a waiver of the administrative appeal.

(2) In its petition, the appealing party must indicate the wastewater discharge provisions objected to, the reasons for the objection, and the alternative condition, if any, it seeks to place in the permit.

(3) The effectiveness of the permit shall not be stayed pending the appeal.

(4) If the water utilities director fails to act within fifteen (15) days, a request for reconsideration shall be deemed to be denied. Decisions not to reconsider a permit, not to issue a permit, or not to modify a permit, shall be considered final administrative action for purposes of judicial review.

(h) *Permit modification.* Permits may be modified by the city for good cause including, but not limited to, the following:

(1) To incorporate any new or revised federal, state, or local pretreatment standards or requirements;

(2) To address significant alterations or additions to the user's operation, processes, or wastewater volume or character since the time of permit issuance;

(3) A change in the WWF that requires either a temporary or permanent reduction or elimination of the authorized discharge;

(4) Information indicating that the permitted discharge poses a threat to the WWF, city personnel, or the receiving waters;

(5) Violations of any terms or conditions of the permit;

(6) Misrepresentations or failure to fully disclose all relevant facts in the permit application or in any required reporting;

(7) Revision of or a grant of variance from categorical pretreatment standards pursuant to 40 CFR 403.13 and Rule 62-625.700, F.A.C.;

(8) To correct typographical or other errors in the permit;

(9) To reflect a transfer of the facility ownership and/or operation to a new owner/operator; or

(10) Upon request of the permittee, provided such request does not create a violation of any applicable requirements, standards, laws, or rules and regulations.

User requests for permit modifications shall be made in writing and include facts or reasons which support the request. When modifying a permit, the city shall allow a reasonable time frame for the user to comply with the new or changed conditions if the user cannot meet them at the time of the modification and if permitted by law. If the new or changed conditions are the result of new or changed pretreatment regulations, those regulations will stipulate the compliance period. The filing of a request by the permittee for a permit modification does not stay any permit condition.

(i) *Permit revocation.* Permits may be revoked for the following reasons:

(1) Failure to notify the city of significant changes to the wastewater prior to the changed discharge.

(2) Failure to provide prior notification to the city of changed condition pursuant to this PPM-W.

(3) Misrepresentation or failure to fully disclose all relevant facts in the permit application.

(4) Falsifying self monitoring reports.

(5) Tampering with monitoring equipment.

(6) Refusing to allow the city timely access to the facility premises and records.

(7) Failure to meet effluent limitations.

(8) Failure to pay penalties.

(9) Failure to pay sewer charges.

(10) Failure to meet compliance schedules.

(11) Failure to provide advance notice of the transfer of a permitted facility.

(12) Violation of any pretreatment standard or requirement, or any terms of the permit or this PPM-W.

(13) Indication that the discharge presents a threat to the environment or threatens to interfere with the operation of the WWF.

Permits shall be voidable upon nonuse, cessation of operations, or transfer of business ownership (except as addressed herein). All permits are void upon the issuance of a new permit.

(j) *Appeal of permit revocation.*

(1) Authorization to discharge industrial waste into the WWF shall continue in effect unless or until rescinded by the water utilities director in writing. In the event that the water utilities director revokes the authorization of any user to discharge wastes into the WWF, notification of such revocation shall be delivered to the user by certified mail or by hand delivery.

(2) Any system user whose authorization to discharge has been revoked may appeal the decision of the city manager. The appeal shall be sent in writing by certified mail, return receipt requested, to the water utilities director within fifteen (15) days of receipt of the city's notification to cease discharge.

(3) The city manager may affirm, reverse, or modify the order of the water utilities director and shall issue its decision in writing. The water utilities director order to cease discharge of wastes into the WWF shall not become effective until the period for appeal has expired, or in the event that an appeal has been filed, until the city manager has rendered a decision, unless the water utilities director has made a finding that continued discharge by the user into the WWF constitutes a clear and present danger to the operations of the WWF or to the health of the public, or to the environment. Any such finding shall be included in the city's notification to cease discharge, and in such event, the revocation of authorization to discharge wastes shall become effective immediately.

(k) *Permit renewal.* All permittees must apply for a permit renewal a minimum of ninety (90) days prior to the expiration of the existing permit. The reapplication for a permit shall consist of a written request for reissuance of the permit. The request shall state if all terms and conditions of the existing permit and PPM-W are complied with and must be signed by an authorized representative of the user.

(l) *Special agreements.* The city reserves the right to enter into special agreements with users setting out special terms under which they may discharge to the WWF. In no case will a special agreement waive compliance with a categorical pretreatment standard or requirement.

(m) *Regulation of discharge from other jurisdictions.* In the event another jurisdiction or municipality contributes all or a portion of its wastewater to the WWF, the city shall require the jurisdiction or municipality to enter into a multi-jurisdictional agreement with the city or the control authority. Prior to entering into a multi-jurisdictional agreement, the city may request the contributing jurisdiction provide the following information:

(1) A description of the quality and volume of the wastewater(s) at the point where it enters the WWF from the contributing jurisdiction.

(2) An inventory of all industrial users within the contributing jurisdiction.

(3) Such information as may be required by the city.

(n) *Multi-jurisdictional agreement.* A multi-jurisdictional agreement as required in subsection (l) of this section, shall contain the following conditions:

(1) A requirement for the contributing jurisdiction to adopt an ordinance which is at least as stringent as this division and local limits which are at least as stringent

as those set out in Chapter 18 of the municipal code and this PPM-W for those users that discharge in the WWF. The requirement shall specify that the ordinance and limits must be revised as necessary to reflect changes made to this division.

(2) A requirement for the contributing jurisdiction to submit a revised industrial user inventory on at least an annual basis.

(3) A requirement for the contributing jurisdiction to:

a. Conduct pretreatment implementation activities including industrial user permit issuance, inspection and sampling, and enforcement; or
b. Authorize the control authority to take or conduct the activities on its behalf.

(4) A requirement for the contributing jurisdiction to provide the control authority with access to all information that the contributing jurisdiction user or municipal user obtains as part of its pretreatment activities associated with the WWF.

(5) Limits on the nature, quality, and volume of the contributing jurisdiction wastewater at the point where it discharges to the WWF.

(6) Requirements for monitoring the discharge.

(7) A provision ensuring the control authority access to the facilities of WWF users located within the contributing jurisdiction's jurisdictional boundaries for the purpose of inspection, sampling, and any other duties deemed necessary by the control authority.

(8) A provision specifying remedies available for breach of the terms of the multi-jurisdictional agreement.

13.10 Reporting Requirements.

(a) Baseline monitoring reports. Within either one hundred eighty (180) days after the effective date of a categorical pretreatment standard, or the final administrative decision on a category determination under Rule 62-625.410(2)(d), F.A.C., whichever is later, existing categorical industrial users currently discharging to or scheduled to discharge to the ECRWRF shall submit to the city a report which contains the information listed numerically below. At least ninety (90) days prior to commencement of their discharge, new sources, and sources that become categorical industrial users subsequent to the promulgation of an applicable categorical standard, shall submit to the city a report which

contains the information listed numerically below. A new source shall report the method of pretreatment it intends to use to meet applicable categorical standards. A new source also shall give estimates of its anticipated flow and quantity of pollutants to be discharged.

(1) Identifying information. The name and address of the facility, including the name of the operator and owner.

(2) Environmental permits. A list of any environmental control permits held by or for the facility.

(3) Description of operations. A brief description of the nature, average rate of production, and standard industrial classifications of the operation(s) carried out by such user. This description should include a schematic process diagram which indicates points of discharge to the ECRWRF from the regulated processes.

(4) Flow measurement. Information showing the measured average daily and maximum daily flow, in gallons per day, to the ECRWRF from regulated process streams and other streams, as necessary to allow use of the combined waste stream formula set out in Rule 62-625.410(6), F.A.C.

(5) Measurement of Pollutants.

a. The categorical pretreatment standards applicable to each regulated process.
b. The results of sampling and analysis identifying the nature and concentration, and/or mass, where required by the standard or by the city, of regulated pollutants in the discharge from each regulated process. Instantaneous, daily maximum, and long-term average concentrations, or mass, where required, shall be reported. The sample shall be representative of daily operations and shall be analyzed in accordance with approved procedures.
c. Sampling must be performed in accordance with procedures set out in the Municipal Code Chapter 18.

(6) Certification. A statement, reviewed by the user's authorized representative and certified by a qualified professional, indicating whether pretreatment standards are being met on a consistent basis, and, if not, whether additional operation and maintenance (O&M) and/or additional pretreatment is required to meet the pretreatment standards and requirements.

(7) Compliance Schedule. If additional pretreatment and/or O&M will be required to meet the pretreatment standards, the shortest schedule by which the user will provide such additional pretreatment and/or O&M. The completion date in this schedule shall not be later than the compliance date established for the applicable pretreatment standard.

(8) Signature and Certification. All baseline monitoring reports must be signed and certified.

(b) Compliance Schedule Progress Reports. The following conditions shall apply to the compliance schedule:

(1) The schedule shall contain progress increments in the form of dates for the commencement and completion of major events leading to the construction and operation of additional pretreatment required for the user to meet the applicable pretreatment standards (such events include, but are not limited to, hiring an engineer, completing preliminary and final plans, executing contracts for major components, commencing and completing construction, and beginning and conducting routine operation);

(2) No increment referred to above shall exceed nine (9) months;

(3) The user shall submit a progress report to the city no later than fourteen (14) days following each date in the schedule and the final date of compliance, including, as a minimum, whether or not it complied with the increment of progress, the reason for any delay, and, if appropriate, the steps being taken by the user to return the established schedule; and

(4) In no event shall more than nine (9) months elapse between such progress reports to the city.

(c) Reports on compliance with categorical pretreatment standard deadline. Within ninety (90) days following the date for final compliance with applicable categorical pretreatment standards, or in the case of the new source following commencement of the introduction of wastewater into the ECRWRF, any user subject to such pretreatment standards and requirements shall submit to the city a report. For users subject to equivalent mass or concentration limits established in accordance with the procedures in Rule 62-625,410(4), F.A.C., this report shall contain a reasonable measure of the user's long-term production rate. For all other users subject to categorical pretreatment standards expressed in terms of allowable pollutant discharge per unit of production (or other measure of operation), this report shall include the user's actual production during the appropriate sampling period. All compliance reports must be signed and certified.

(d) Periodic Compliance Reports.

(1) All significant industrial users shall, at a frequency determined by the city but in no case less than twice per year (in June and December), submit a report indicating the nature and concentration of pollutants in the discharge which are limited by pretreatment standards and the measured or estimated average and maximum daily flows for the reporting period. All periodic compliance reports must be signed and certified.

(2) All wastewater samples must be representative of the user's discharge. Wastewater monitoring and flow measurement facilities shall be properly operated, kept clean, and maintained in good working order at all times. The failure of a user to keep its monitoring facility in good working order shall not be grounds for the user to claim that sample results are unrepresentative of its discharge.

(3) If a user subject to the reporting requirement in this section monitors any pollutant more frequently than required by the city, the results of this monitoring shall be included in the report.

(e) Reports of Changed Conditions. Each user must notify the city of any planned significant changes to the user's operations or system which might alter the nature, quality, or volume of its wastewater at least thirty (30) days before the change.

(1) The city may require the user to submit such information as may be deemed necessary to evaluate the changed condition, including the submission of a permit application.

(2) The city may issue a permit or modify an existing permit in response to changed conditions or anticipated changed conditions.

(3) For purposes of this requirement, significant changes include, but are not limited to, flow increases of twenty-five percent (25%) or greater, and the discharge of any previously unreported pollutants.

(f) Reports of Potential Problems.

(1) In the case of discharge, including, but not limited to, accidental discharges, discharges of a non-routine, episodic nature, a non-customary batch discharge, or a slug load, that may cause potential problems for the city, the user shall immediately telephone and notify the city of the incident. This notification shall include the location of the discharge, type of waste, concentration and volume, if known, and corrective actions taken by the user.

(2) Within five (5) days following such discharge, the user shall, unless waived by the city, submit a detailed written report describing the cause(s) of the discharge and the measures to be taken by the user to prevent similar future occurrences. Such notification shall not relieve the user of any expense, loss, damage, or other liability which may be incurred as a result of damage to the ECRWRF, natural resources, or any other damage to person or property; nor shall such notification relieve the user of any fines, penalties, or other liability which may be imposed pursuant to this article.

(3) A notice shall be permanently posted on the user's bulletin board or other prominent place advising employees whom to call in the event of a discharge described in subparagraph (1) above. Employers shall ensure that all employees, who may cause a discharge to occur, are advised of the emergency notification procedure.

(g) Reports from Unpermitted Users. All users not required to obtain a permit shall provide appropriate reports to the city as the city may require.

(h) Notice of Violation/Repeat Sampling and Reporting. If sampling performed by a user indicates a violation, the user must notify the city within twenty-four (24) hours of becoming aware of the violation. The user shall also repeat the sampling and analysis and submit the results of the repeat analysis to the city within thirty (30) days after becoming aware of the violation. The user is not required to resample if the city monitors at the user's facility at least once a month, or if the city samples between the user's initial sampling and when the user receives the results of this sampling.

(i) Notification of Discharge of Hazardous Waste.

(1) Any user who commences the discharge of hazardous waste shall notify the city, the EPA Regional Waste Management Ordinance Director, and state hazardous waste authorities, in writing, of any discharge into the ECRWRF of a substance which, if otherwise disposed of, would be a hazardous waste under 40 CRF Part 261. Such notification must include the name of the hazardous waste as set forth in 40 CFR Part 261, the EPA hazardous waste number, and the type of discharge (continuous, batch, or other). If the user discharges more than one hundred (100) kilograms of such waste per calendar month to the ECRWRF, the notification also shall contain the following information to the extent such information is known and readily available to the user; an identification of the hazardous constituents contained in the wastes, an estimation of the mass and concentration of such constituents in the waste stream discharged during that calendar month, and an estimation of the mass of constituents in the waste stream expected to be discharged during the following twelve (12) months. All notifications must take place no later than one hundred and eighty (180) days after the discharge commences. Any notification under this paragraph needs be submitted only once for each hazardous waste discharged. However, notifications of changed conditions must be submitted under section 18-23(e). The notification requirement in this section does not apply to pollutants already reported by users subject to categorical pretreatment standards under the self-monitoring requirements of Article 18 Municipal Code.

(2) Discharges are exempt from the requirements of paragraph (1), above, during a calendar month in which they discharge no more than fifteen (15) kilograms of hazardous wastes, unless the wastes are acute hazardous wastes as specified in 40 CFR 261.30(d) and 261.33(e). Discharge of more than fifteen (15) kilograms of nonacute hazardous wastes in a calendar month, or of any quantity of acute

hazardous wastes as specified in 40 CFR 261.30(d) and 261.33(e), requires a one-time notification. Subsequent months during which the user discharges more than such quantities of any hazardous waste do not require additional notification.

(3) In the case of any new regulations under Section 3001 of RCRA identifying additional characteristics of hazardous waste or listing any additional substance as a hazardous waste, the user must notify the city, the EPA Regional Waste Management Waste Ordinance Director, and state hazardous waste authorities of the discharge of such substance within ninety (90) days of the effective date of such regulations.

(4) In the case of any notification made under this section, the user shall certify that it has a program in place to reduce the volume and toxicity of hazardous wastes generated to the degree it has determined to be economically practical.

(5) This provision does not create a right to discharge any substance not otherwise permitted to be discharged by this article, a permit issued thereunder, or any applicable federal or state law.

(j) Analytical Requirements. All pollutant analyses, including sampling techniques, to be submitted as part of a permit application or report shall be performed in accordance with the techniques prescribed in 62-625,600(1)(e), F.A.C., unless otherwise specified in an applicable categorical pretreatment standard; or the sampling or analytical techniques for the pollutant in question is not given for the pollutant in question, sampling and analyses must be performed in accordance with procedures approved by EPA.

(k) Sample Collection.

(1) Except as indicated in paragraph (2), below, the user must collect wastewater samples using flow proportional composite collection techniques. In the event flow proportional sampling is infeasible, the city may authorize the use of time proportional sampling or a minimum of four (4) grab samples where the user demonstrates that this will provide a representative sample of the effluent being discharged. In addition, grab samples may be required to show compliance with instantaneous discharge limits.

(2) Samples for oil and grease, temperature, pH, cyanide, phenols, sulfides, and volatile organic compounds must be contained using grab collection techniques.

(l) Timing. Written reports will be deemed to have been submitted on the date postmarked. For reports which are not mailed, postage prepaid, into a mail facility serviced by the United States Postal Service, the date of receipt of the report shall govern.

(m) Records. Any industrial user subject to the reporting requirements in this article is requested to retain for a minimum of three (3) years any records of monitoring activities and results, and shall make records available for inspection or photocopying by the city

or state or federal officials. Records shall include the date, exact place, method and time of sampling and the name of the person(s) taking the samples; the dates analyses were performed; who performed the analysis, the analytical techniques or methods used and the results of said analyses. The three-year period shall be automatically extended for the duration of any litigation concerning the user, the city or where the user has been specifically notified of a longer retention period by the city.

13.11 Protection from Damage.

See requirements of Chapter 18, Municipal Code.

13.12 Enforcement Actions.

See requirements of Chapter 18, Municipal Code and this PPM-W.

The following escalating enforcement strategy shall be used by the city when industrial users are out of compliance with this PPM-W. The various types of enforcement actions, including the industrial discharger enforcement procedure (IDEP), shall be used as determined by the city depending on the circumstances of the violation and the PPM-W. Applicable fines required by this chapter shall be added to the monthly water utility bill and collected in accordance with billing and collection procedures.

(a) *Intermediate threat to public health.* The water utilities director may require the immediate halt of a discharge if it is deemed as an immediate threat to public health or the WWF.

(b) *Self-monitoring.* The industrial user will review its self-monitoring data to determine whether a violation of this division and/or of its permit limitations has occurred. If a violation has occurred, the industrial user must provide to the city:

(1) 24-hour notification that a violation has occurred.

(2) Magnitude and nature of the violation.

(3) Details regarding analytical quality assurance.

Failure to comply with the 24-hour notification requirement will result in administrative fines per occurrence.

(c) *Resampling.* Upon the determination that a violation has occurred, the industrial user must resample the final discharge for the violated parameter. The resampling data must be submitted to the city within thirty (30) days of discovery. Failure to resample and report within thirty (30) days is a violation of this division and Rule 62-625.600(6)(b),

F.A.C. If the industrial user fails to resample and submit the report within thirty (30) days, the water utilities director will issue a notice of violation (NOV). Failure to comply with the NOV will result in a single adminis-trative fine per violation. Continued failure to comply within sixty (60) days from original violation thereafter will result in a monthly fine.

(d) *WWF monitoring.* The water utilities director, or his designee, will conduct periodic, independent compliance monitoring of industrial users as appropriate. If the violation is not significant, as defined in this division, the city will issue a NOV and a 45-day compliance schedule including the requirement to resample in order to determine whether a violation is significant. The results of the resampling must be submitted to the city within thirty (30) days of receipt of the compliance schedule. Failure to comply will result in a Notice of Significant Violation. Continued failure to comply sixty (60) days after issuance of the NOSV will result in a monthly fine.

(e) *Significant noncompliance.* The water utilities director, or designee will review sampling data obtained to determine whether significant noncompliance as defined in this division has occurred; in which case a notice of significant violation (NOSV) will be assessed per violation.

(f) *Formal notice.* If significant noncompliance is determined to have occurred, the water utilities director will issue a notice of significant violation (NOSV), requiring the industrial user to submit within fifteen (15) days of the receipt of the notice, a 90-day compliance schedule to determine the need to install or construct pretreatment facilities. Failure to respond within fifteen (15) days will result in a single fine per violation. Upon receipt of the draft compliance schedule, the water utilities director will issue the compliance schedule as a condition of continued operation. A demonstration of compliance (DOC) will be included as the final item in the compliance schedule. If at any time during the 90-day schedule, the industrial user determines that pretreatment facilities are required, the industrial user will inform the water utilities director of such and submit a draft construction schedule.

(g) *DOC.* Upon completion of the 90-day compliance schedule, the water utilities director will review the DOC data to determine whether compliance has been achieved. Failure to demonstrate compliance during the 90-day schedule will result in the water utilities director issuing another NOSV requiring the industrial user to submit within fifteen (15) days of receipt of the NOSV a draft compliance schedule for the construction of new pretreatment facilities or the improvement, modification or expansion of existing facilities. Failure to respond within fifteen (15) days will result in a single fine per violation. Continued failure to comply within sixty days of the NOSV thereafter will result in a monthly fine. Upon receipt of the draft compliance schedule, the water utilities director will issue the compliance schedule as a condition of continued operation. Approval of the

facility design engineer by the water utilities director is required prior to design of the pretreatment facility. A DOC will be included as the final item in the compliance schedule. Upon completion of the construction compliance schedule, the water utilities director will review the DOC data to determine whether compliance has been achieved.

(h) *Final schedule of compliance.* If the construction of pretreatment facilities does not achieve compliance, the water utilities director will assess a fine and will issue a notice of monthly fine (NMF). Fines of the same amount will continue to be assessed on a monthly basis until compliance is achieved or service is terminated. The NMF will require that the industrial user submit a draft final compliance schedule within fifteen (15) days of receipt of the NMF. Upon receipt of the draft compliance schedule, the water utilities director will issue the final schedule of compliance as a condition of continued operation. A DOC period will be included as the final item in the compliance schedule. Upon completion of the compliance schedule, the water utilities director will review the DOC data to determine whether compliance has been achieved.

(i) *Show cause hearing.* If the final compliance schedule does not achieve compliance, the water utilities director will issue a notice to show cause (NSC) why the discharge permit should not be revoked and service terminated, in accordance with law. The NSC will be served on the user specifying the time and place of the hearing, the proposed facts of the action, the reasons for such actions and a request that the user show cause why the proposed enforcement action should not be taken. The notice of hearing shall be served personally or by registered or certified mail (return receipt requested) at least ten (10) days prior to the hearing on the user or posted at the location where the alleged violation is occurring or has occurred. Whether or not the user appears as notified, immediate enforcement action may be pursued following the hearing. The water utilities director will hold the show cause hearing to determine whether the permit should be revoked and sewer services terminated.

(1) If the industrial user shows cause for its failure to comply, service shall not be terminated nor the permit revoked. The monthly fine will increase to an amount equal to the NMF and a new final compliance schedule will be issued.

(2) If the industrial user fails to show cause why its permit should not be revoked and service terminated, the industrial user's permit shall be revoked and its sewer service will be terminated by the city.

(3) *Violations not addressed.* Penalties for violations of this division and/or the user's permit not addressed in this section will be assessed at the discretion of the city.

13.13 Permit fees, surcharges and penalties.

(a) Permit fees, industrial surcharges and penalties shall be in accordance with the provisions of the PPM-W and as approved by resolution.

(b) Any person who violates a provision of this PPM- W may be prosecuted in the name of the state in a court having jurisdiction of misdemeanors by the prosecuting attorney thereof, and upon conviction shall be punished by a fine not to exceed the amount set by resolution of the city commission per day for each offense or by imprisonment not to exceed sixty (60) days or by both such, fine and imprisonment. If a violation continues, each day of such violation shall constitute a separate offense.

(c) Any person who knowingly makes any false statement, representation or certification in any record or other document submitted under this division of industrial user permits shall be subject to fines or by imprisonment for not more than sixty (60) days, or both.

13.14 Civil and Criminal Remedies.

See requirements of Chapter 18, Municipal Code and this PPM-W.

13.15 Notification Requirements and Affirmative Defenses to Accidental Discharge, Upset, and Bypass.

See requirements of Chapter 18, Municipal Code.

13.16 Violations.

See requirements of Chapter 18, Municipal Code and this PPM-W.

(a) The water utilities director may suspend the water service and/or the wastewater service and may revoke a wastewater contribution permit when such suspension or revocation is necessary, in the opinion of the water utilities director, to stop an actual or threatened discharge which presents or may present an imminent or substantial endangerment to the health and welfare of persons, or to the environment, causes or may cause interference to the POTW, or causes or may cause the POTW to violate any condition of its NPDES permit.

(b) Any person notified of a suspension of the wastewater treatment service and/or the wastewater contribution permit shall immediately stop or eliminate the contribution. In the event of a failure of the person to comply voluntarily with the suspension order, the water utilities director shall take such steps as deemed necessary including initiation of legal action by the city attorney and immediate severance of the sewer connection, to

prevent or minimize damage to the wastewater facilities and endangerment to any individuals. The water utilities director shall reinstate the wastewater contribution permit and/or the wastewater treatment service upon proof of the elimination of the noncomplying discharge. A detailed written statement submitted by the User describing the causes of the harmful contribution and the measures taken to prevent any future occurrence shall be submitted to the water utilities director within fifteen (15) calendar days of the date of occurrence.

(c) Any user who violates the following conditions of this chapter or applicable state and federal regulations, is subject to having his permit revoked in accordance with the procedures of Chapter 18 of the Municipal Code and this PPM-W.

(1) Failure of a user to report factually the wastewater constituents and characteristics of his discharge.

(2) Failure of the user to report significant changes in operations, or wastewater constituents and characteristics.

(3) Refusal of reasonable access to the user's premises for the purpose of inspection or monitoring.

(4) Violation of conditions of the permit.

(d) Whenever the water utilities director finds that any user has violated or is violating this division, his wastewater contribution permit, or any prohibition, limitation or requirement contained herein, the water utilities director may serve upon such person a written notice stating the nature of the violation. Within thirty (30) days of the date of the notice, a plan for the satisfactory correction thereof shall be submitted to the water utilities director by the user.

(e) In the event of violation of this PPM-W, the water utilities director or authorized employees may verbally instruct the owner as to the necessary corrective action. If the owner fails to carry out verbal instructions in a timely manner or if a serious violation or hazard to public health exists, the water utilities director, may issue to the owner a written order stating the nature of the violation, the corrective action and the time limit for completing the corrective action. This time limit will be not less than twenty-four (24) hours nor more than six (6) months, depending upon the type and severity of the violation. The offender shall within the period of time stated in such notice, permanently cease all violations. The record of the mailing of said notice or order shall be prima facie evidence thereof and failure of said owner or owners to receive same shall in no way affect the validity of any proceedings conducted pursuant to this chapter.

(f) A person violating any provision of this section resulting in the disconnection of water and/or wastewater services by the water utilities director shall be charged the normal and usual charges for disconnection of said water and sewer services and the usual charges for connection of said water and wastewater services.

13.17 Authority to disconnect service.

The city reserves the right to terminate water and wastewater disposal services and disconnect a customer from the system when:

(1) Acids or chemicals damaging to wastewater facilities are released into the sewer causing rapid deterioration of these structures or interfering with proper conveyance and treatment of wastewater;

(2) A governmental agency informs the city that the effluent from the wastewater treatment plant is no longer of a quality permitted for discharge into a watercourse, and it is found that the customer is delivering wastewater to the city's system that cannot be sufficiently treated or requires treatment that is not provided by the city as normal domestic treatment; or

(3) The customer:

a. Discharges industrial waste or wastewater that is in violation of the permit issued by the approving authority,
b. Discharges wastewater at an uncontrolled, variable rate in sufficient quality to cause an imbalance in the wastewater treatment system.
c. Fails to pay monthly bills for water and sanitary sewer services when due, or
d. Repeats a discharge of prohibited wastes into public sewers.

CHAPTER 14: FATS, OILS AND GREASE PROGRAM

14.1 Purpose

To regulate and reduce the discharge of fats, oils and greases from commercial, and industrial facilities into the sanitary sewer system. Such discharges contribute to sewer backups, excessive sewer cleaning, lift station cleaning and wastewater treatment plant problems.

14.2 Fats, Oils and Grease.

(a) Wastewater containing such amounts of fats, oils or greases (FOG) as may be determined by the Water Utilities Director or his/her designee to be detrimental to the wastewater system shall not be directly discharged into the wastewater system. An efficient grease trap, grease interceptor or oil/water separator shall be utilized prior to discharge to the wastewater system and maintained as required in this section.

(b) Wastewater from restaurants or food service facilities shall be presumed to contain grease and grease traps or grease interceptors shall be required at all such locations.

(c) Automotive-related facilities including but not limited to car-washes and automobile repair shops, truck maintenance facilities and bus storage facilities, which may contribute petroleum-based oil to the collection system, are required to have an approved oil/water separator.

(d) Commercial facilities which use oils or grease may be required to furnish an oil or grease separator when, in the opinion of the city building official or Director of Water Utilities, an interceptor (separator or grease trap) is necessary for the proper handling of wastes containing matter considered harmful to the sanitary sewer system.

(1) All interception units shall be of type and capacity approved in writing by the city and shall be installed at a location on the premises to be easily accessible for cleaning and inspection. The minimum size of interceptors shall be in conformance with the FBC Plumbing Code, except that interceptors for restaurants of all types shall be 25 gallons of capacity per restaurant seat.

(2) All nonresidential facilities that prepare, process or serve food as determined by the Water Utilities Director or his/her designee are required to have an approved grease interceptor or approved grease trap. Such facilities shall follow all Certified Professional Food Management (CPFM) laws and rules required by the Health Department.

(3) A grease interceptor (separator or grease trap) shall be installed in the waste water line leading from the sinks, floor drains, mop sinks, service sinks or funnel drains in a food service facility.

(4) An oil interceptor (separator or grease trap) shall be installed in the storm and/or sanitary sewer drains of car washes, service stations, automotive repair facilities, truck maintenance facilities and bus storage yards when, in the opinion of the city building official or Director of Water Utilities, a potential hazard exists in that oils or other flammables could be introduced or admitted into the drainage system.

(5) The specifications of the Plumbing and Drainage Institute shall be utilized for the sizing of interceptors (separators or grease traps). The size, type material and location of interceptors shall be approved by the building official.

(6) Each interceptor shall be installed as to provide ready accessibility for service and maintenance, and to be separate from food service areas.

(7) No waste other than that requiring treatment or separation (no sanitary waste) shall be discharged into any interceptor.

(8) Grease interceptors, grease traps, and oil/water separators shall be installed solely at the customer's expense. Proper operation, maintenance, and repair of grease interceptors, grease traps, and oil/water separators shall be done solely at the customer's expense.

(9) The owner or operator shall maintain a maintenance log for the grease interceptors, grease traps, or oil/water separators on site that includes the previous 12-months activity. The log shall be available upon request by the city and include the date, time, maintenance performed, volume removed each pump out, and the name, signature, and contact information of the person who performed the maintenance.

(10) No chemicals shall be added to grease traps, including:

a. Solvents
b. Emulsifiers
c. Caustics
d. Acids
e. Enzymes
f. Bacteria

(11) Grease traps shall be cleaned at least monthly, and as follows:

a. When there is 6 inches of grease on top of the water
b. When solids are 8 inches above the bottom of the grease trap.

(12) Grease traps shall not have grease removed by decanting, skimming or back-flushing.

(13) Customers shall repair, retrofit or replace any existing grease trap within 90 days of notice by the City that the customer is contributing unacceptable levels of FOG to the sanitary sewer system.

(14) If grease accumulates in the wastewater collection system lines or damage to the wastewater system is caused by the discharge of FOG from a commercial facility required to have a grease trap, the owner or operator may be billed for cleaning the collection lines or any other expense incurred by the city.

(15) Interceptors shall not be required for residential connections.

(16) The City shall establish a fats, oils and grease (FOG) collection surcharge to be applied to the wastewater account of all commercial accounts that have a required grease trap. The surcharge for periodic removal of fats, oils and greases from the grease trap shall be established as part of the fees and charges for sewer service approved by resolution of the City Commission. The required oil and grease collection surcharge may be waived, if the commercial customer submits an annual written contract and invoices demonstrating that they have monthly private collection service for oil and grease traps from a vendor approved by the City and listed in the attachments to the PPM-W. The Director or designee shall inspect all grease traps annually. Any facility or person found in violation of this chapter shall be charged the FOG collection surcharge until the facility is found to be in compliance.

CHAPTER 15: PRIVATE WASTEWATER DISPOSAL SYSTEMS

15.1 On-Site Disposal Systems.

(a) Where a public sanitary sewer is not available as defined above, the building sewer shall be connected to a private wastewater disposal system complying with the provisions of this section. No person shall construct a septic tank or other wastewater disposal facility without prior permitting by the PBCPHU.

(b) The city will not issue a building permit involving the generation and discharge of effluents unless the applicant has previously obtained permit and/or approval from the PBCPHU.

(c) It shall be unlawful for any person to construct or maintain any privy, privy vault or cesspool.

(d) It shall be unlawful to maintain or construct any septic tank where a public sewer is available.

(e) The type, capacities, location, minimum areas and layout of a private wastewater disposal system shall comply with all regulations of the State Department of Health, as related in Chapter 64E, FAC, and to all state and local regulation. No septic tank or cesspool shall be permitted to discharge to any natural outlet.

(f) The owners shall operate and maintain the private wastewater disposal facilities in a sanitary manner at all times, at no expense to the city.

(g) Restrictions and permits for removing septic tank contents: It shall be unlawful to empty, dump, throw or otherwise discharge into any manhole, catch basin or other collection

system opening, the contents of any septic tank, sludge, sewage or other similar matter or material, except as approved by the ECRWRF.

(h) No statement contained in this section shall be construed to interfere with any additional requirements that may be imposed by the Health Officer, PBCDERM, or Utilities Director.

(i) At such time as a public sewer becomes available to a property served by a private sewage disposal system, as provided above, a direct connection shall be made to the public sewer within 180 days after date of official notice by the city so to do in compliance with this chapter, and any septic tanks, and similar private sewage disposal facilities shall be abandoned and filled with suitable material, as outlined in Chapter 64E-6, F.A.C.

15.2 Septic Tank Inspections.

(a) Septic tank inspections: Any residential property utilizing a septic tank system for the disposal of sanitary wastes will be required, prior to the sale of said property, to pass a septic tank inspection by a licensed septic tank service firm to verify the integrity of the system.

15.3 Private Sanitary Sewer Systems Constructed to Serve Subdivisions and the like

(a) General Requirements.

(1) Any person desiring to design and construct a sanitary sewer system to serve a subdivision, lot or parcel and to have such system included in the city's sanitary sewer system must comply in every and all respects with the provisions of this chapter.

(2) In the case of a collection system to serve a subdivision, the developer shall first submit to the city Utilities Director a preliminary subdivision plat showing all details of the topography thereon.

(3) In the case of a collection system to serve an existing lot or parcel for which a subdivision plat is not required the developer must submit a preliminary site plan to the city Utilities Director showing the improvements proposed and all details of the topography thereon.

(4) Upon receipt of such preliminary subdivision plat or site plan, the city Utilities Director will advise the developer as to the availability of a receiving sewer line.

(5) In the event a new lift station, an increase in capacity of an existing lift station, a new force main or a gravity main is required, the city Utilities Director will determine location, capacity and limits of the area the facility is intended to serve.

(6) The city Water Utilities Director will designate the portions of the new collection system, if any, that will become a part of the city's POTW.

(7) All costs for planning, designing, permitting and constructing the system in accordance with the drawings accepted by the City Water Utilities Director shall be borne by the developer.

(8) Developers are required to maintain the new collection system in accordance with this chapter until completion of the associated project.

(9) Upon completion of the installation, and prior to connection to the city POTW, the developer shall submit to the city Water Utilities Director signed and sealed as-built drawings, copy of FDEP certification form, and copy of PBCPHU as-built approval.

(10) At the option of the city Water Utilities Director, he may designate portions of a new collections system to become part of the city's POTW. In such event, the developer, upon completion of the new collection system installation, shall be required to transfer ownership of such portion, including right-of-ways and easements, to the city at no charge to the city. The city Water Utilities Department shall be responsible for the operation and maintenance of any such newly acquired portions.

(11) If a new collection system is to be privately owned and operated, the owner must comply in every and all respects with the provisions of this chapter.

(b) Construction Standards.

(1) The city Water Utilities Director shall develop and maintain specific design criteria that shall govern the review and approval of plats and site plans submitted in accordance with division (A) of this section. Such design criteria shall be made available for the use and benefit of developers, engineers and the citizens of Lake Worth.

(2) The new collection system shall be designed in strict accordance to FAC Chapter 62 requirements, and city standards created per subdivision (1) hereof.

(3) The developer shall engage the services of a professional engineer registered in the state for the preparation of the required drawings, and shall obtain all necessary permits for the construction of the new collection system.

15.4 Operation and Maintenance of Private Sewage Disposal Facilities.

(a) The owners of all private sewer collection systems within the city shall be responsible for the proper maintenance and operation of said systems to prevent sewer backups, prevent

sewer overflows and minimize inflow and infiltration, in accordance with section 62-604.500 of the Florida Administrative Code (FAC).

(b) Any person seeking a permit from the city for the installation of a private collection system shall provide drawings showing the private collection system and indicating the exact location of any and all lift stations included within the system. The Department will maintain documents pertaining to private collection systems located within city limits.

(c) The owners of all private collection systems shall be required to develop and follow a sewage spill contingency plan for such systems addressing and remediating sewage spills caused by but not limited to line failure, line collapse, line obstruction, surcharge, power failure and/or mechanical failure.

(d) The owners of all private lift stations shall enter into an agreement for the regular servicing and maintenance of said lift stations. All required work shall be performed by a person holding a State of Florida master plumbing certificate of competency, a Palm Beach County master plumber certificate of competency, or a wastewater collection technician license, or by a person approved by the Director to do such work. The maintenance contract shall provide for the maintenance of said lift stations a minimum of once per month and the availability of 24 hours per day emergency service to maintain said lift stations in full operating condition at all times. The owners of all private lift stations shall, in addition, maintain a written maintenance record and shall make same available to the city to assist in the enforcement of the provisions of this section.

(e) Any owners of all private collection systems shall obtain an operating permit from the Department. Said permit shall be renewable on an annual basis 90 days prior to the expiration date specified on the existing permit at a charge to be established by resolution of the City Commission.

(1) As a condition requisite for the obtaining of an initial operating permit, the owner of such private collection system shall be required to submit a copy of the following to the city:

a. A document delineating the private collecting system as required in subdivision (b) hereof,
b. A copy of the private lift station service and maintenance agreement, as per subdivision (d) hereof
c. A sewage spill contingency plan as required by subdivision (c) hereof, and as defined by the city,
d. As a condition requisite for renewing the operating permit, the owner of such private collection system shall be required to submit copies of the system maintenance records for the 12 month period prior to the operating permit renewal date, a copy of the private lift station service and maintenance agreement as required and an updated sewage spill contingency plan.

(f) The owners of all private lift stations shall comply with the provisions of this chapter within 90 days of the effective date of this chapter.

(g) The Department shall perform an annual video inspection of all private gravity sewer collection systems, and a visual inspection of all lift stations. An annual inspection fee to be established by resolution of the City Commission shall be assessed for each private collection system and for each lift station. Private collection systems shall be inspected for evidence of sewer backups, sewer overflows, excessive inflow and infiltration. Based on the findings of these inspections, appropriate enforcement action may be taken, including code enforcement actions.

CITY OF LAKE WORTH
FLORIDA

WATER AND SEWER UTILITY DEPARTMENT ORDINANCE AND POLICIES MANUAL

- MUNICIPAL CODE SECTION 18 CURRENTLY GOVERNS
- POLICIES ARE IN MULTIPLE DOCUMENTS
- SOME FEES ARE IN ORDINANCES WHILE RATES ARE IN RESOLUTIONS
- POLICIES DO NOT REFLECT CURRENT PRACTICES
- ORDINANCES AND POLICIES DO NOT MATCH

WATER AND SEWER UTILITY DEPARTMENT ORDINANCE AND POLICIES MANUAL

- NEW ORDINANCE, ARTICLE 18, PROVIDES LEGAL BASIS FOR WATER & SEWER REQUIREMENTS
- POLICIES AND PROCEDURES MANUAL (PPM-W) PROVIDES REQUIREMENTS TO IMPLEMENT ORDINANCE
- RATES AND FEES ARE IN SEPARATE RESOLUTIONS
- NEW ORDINANCE AND POLICIES MATCH
- NEW POLICIES INCLUDE:
    - CHANGES TO CURRENT PRACTICES
    - EXPANSION POLICIES

WATER AND SEWER UTILITY DEPARTMENT ORDINANCE AND POLICIES MANUAL

HEALTH AND SAFETY IMPROVEMENTS

LAKE WORTH IS A COMPACT URBAN ENVIRONMENT WITH POCKETS THAT STILL USE WELLS OR SEPTIC TANKS

- REQUIRE ALL DEVELOPED PROPERTIES IN CITY TO CONNECT TO WATER IF AVAILABLE
- REQUIRE ALL DEVELOPED PROPERTIES IN CITY TO CONNECT TO SEWER IF AVAILABLE

WATER AND SEWER UTILITY DEPARTMENT ORDINANCE AND POLICIES MANUAL

IMPROVED REGULATIONS

- REGULATE COMMERCIAL PROPERTIES THAT PRODUCE FATS, OILS AND GREASE TO REDUCE SEWER BACKUPS
- REQUIRE TESTING OF BACKFLOW PREVENTERS TO MEET EXISTING ORDINANCE AND HEALTH DEPARTMENT RULES TO PREVENT WATER SYSTEM CONTAMINATION
- ADD REGULATIONS AND INSPECTIONS FOR PRIVATE SEWER SYSTEMS TO ASSURE MAINTENANCE AND REDUCE ENVIRONMENTAL IMPACTS

WATER AND SEWER UTILITY DEPARTMENT ORDINANCE AND POLICIES MANUAL

RATE STRUCTURE CHANGES

- ALL RATES, FEES AND CHARGES ARE APPROVED BY RESOLUTION OF CITY COMMISSION
- ESTABLISH A MINIMUM BILL FOR CONNECTED PROPERTIES TO PAY FAIR CHARGE FOR FIXED COSTS
- ADD A WATER/SEWER DEVELOPMENT REVIEW FEE
- PROVIDE ECONOMIC DEVELOPMENT INCENTIVE RATE FOR 10 NEW JOBS AND MINIMUM 1.5” WATER CONNECTION

WATER AND SEWER UTILITY DEPARTMENT ORDINANCE AND POLICIES MANUAL

WATER AND SEWER EXPANSION PROGRAM

- DEPARTMENT WILL EXPAND WATER AND SEWER SERVICE TO ALL PROPERTIES IN CITY NOT CURRENTLY COVERED
- CONNECTION CHARGES WILL RECOVER EXPANSION COSTS
- USE VOLUNTARY ASSESSMENTS TO EXPAND WATER AND SEWER WITHIN SERVICE AREA OUTSIDE CITY
- DELAY PAYMENT OF 25% SURCHARGE OUTSIDE CITY FOR 10 YEARS IF EXISTING PROPERTIES CONNECT TO WATER/SEWER
- AUTHORIZE USE OF MUNICIPAL BULK WATER AGREEMENTS FOR INCREASED USAGE

CITY OF LAKE WORTH

7 North Dixie Highway · Lake Worth, Florida 33460 · Phone: 561-586-1600· Fax: 561-586-1750

AGENDA DATE: February 17, 2015, Regular Meeting **DEPARTMENT:** City Manager

---

EXECUTIVE BRIEF

TITLE:
Discussion regarding allowing the United States Green Building Council (USGBC) South Florida Chapter to locate its headquarters in City office space.

SUMMARY:
The Discussion regarding a potential collaboration with the USGBC South Florida Chapter for the exchange of certain resources and services for space within City offices.

BACKGROUND AND JUSTIFICATION:
The principal focus of the USBC South Florida Chapter is to provide extensive education and training to professionals, residents, students and companies in southeast Florida in sustainable construction, education and community engagement.

The Chapter is represented by hundreds of experts in green-building and sustainability initiatives and practices and is a respected organization in the offices of elected officials in both Tallahassee and Washington, DC. Locating this Chapter in Lake Worth, as a tangible partner, will provide credibility to the City's own advocacy efforts. Additionally, the USGBC staff will assist the City by being a resource regarding the City's efforts to create a sustainable community. This includes coordinating and facilitating workshops and staff meetings.

MOTION:
I move to authorize/not authorize the City Attorney and City Manager to discuss and negotiate terms of an agreement with USBC South Florida Chapter for City Commission action.

ATTACHMENT(S):
Fiscal Impact Analysis – not applicable
Memorandum from USGBC South Florida

USGBC South Florida
sustain balance conserve

February 5, 2015

TO: Michael Bornstein, City Manager, City of Lake Worth
John Szerdi, City Commissioner, City of Lake Worth

Thanks again for meeting with me last week concerning the possibility of the USGBC South Florida Chapter moving its headquarters office back to the City of Lake Worth. Per your request, below you will find points related to the benefits of our nonprofit (501[c][3]) organization's possible presence in the City.

Should you or any Commissioners wish to discuss any of these particulars or anything else regarding this potential collaboration, I would be pleased to have that conversation. On behalf of our volunteer Board of Directors, thanks in advance for your consideration of this partnership.

Lee Cooke, Executive Director
USGBC South Florida Chapter
561-373-7367 / lcooke@usgbcsf.org / www.usgbcsf.org

Build Green! Everyone Profits! Consider the environment, please, before printing this email!
Ask me about our wonderful volunteers ... and how to get involved in our Chapter family!

****

- By having our headquarters office here in the City of Lake Worth, the visibility of the City would be raised. The USGBC South Florida Chapter is a nonprofit organization with more than 6,000 members and friends in South Florida, as well as solid business relationships throughout the State of Florida and the USA through the strong brand of the US Green Building Council, which is headquartered in Washington, DC. The Chapter has become the region's strongest advocate for green and sustainable-building design and construction practices, including the LEED Certification program -- itself a positive brand. Our amazing volunteers contributed more than 11,000 hours to the Chapter last year, allowing us to continue to effectively meet our Mission of transforming the way buildings and communities are designed, built and operated. Because of these efforts, we are making outstanding educational inroads from the Treasure Coast to the Keys toward a socially responsible, healthy and prosperous environment that improves the quality of life here in South Florida.

- The Chapter would be valued-added to the staff and residents of the City. The Chapter's Executive Director and volunteer leadership can be tapped for counsel by City-related constituencies, be it for counsel related to green and sustainable projects and initiatives; by providing guidance related to the LEED Certification system; or by simply being accessible to citizenry and staff in efforts to raise awareness of the need to embrace sustainability initiatives.

(cont.)

- As a prominent and respected international organization, the USGBC brand would provide positive PR and image to the City of Lake Worth. With a community comprising 76 local affiliates, nearly 16,000 member companies and organizations, and more than 170,000 LEED Professional Credential holders, the USGBC is the driving force of an industry that contributed $600 billion to the U.S. gross domestic product from 2009-2014. The USGBC leads a diverse constituency of builders and environmentalists, corporations and nonprofit organizations, elected officials and concerned citizens, teachers and students ... and more.

  Buildings in the United States are responsible for 39% of CO2 emissions, 40% of energy consumption, 13% water consumption and 15% of GDP per year, making green building a source of significant economic and environmental opportunity. Greater building efficiency can meet 85% of future U.S. demand for energy, and a national commitment to green building has the potential to generate 2.5 million American jobs.

- The housing of the USGBC's South Florida Chapter in the City of Lake Worth would bring a heightened presence to the City, illustrating that this respected municipality is supportive of the important green initiatives the Chapter represents through tangible collaboration with "best in class" partners.

- The seven USGBC Chapters in the State of Florida are in the process of merging into a single nonprofit Chapter -- USGBC Florida. This complex process has been in the works for three years and will culminate in the Winter of 2015. Although a headquarters location has not been determined, it is the South Florida Chapter and its Executive Director that have been tapped to oversee this path, and the South Florida Chapter's Executive Director will be the first ED for USGBC Florida. As such, there is a strong possibility that the City of Lake Worth would not just be the headquarters of the South Florida Chapter, but also to the USGBC Florida, bringing even greater visibility, prestige and status to the City.

- The Chapter, like the City of Lake Worth, is deeply respected in South Florida. The Chapter is driven by a deep conviction that business practices promoting social and environmental responsibility are the right business practices for the future. Setting the standard for USGBC Chapters around the country and the world for environmental conviction and excellence and social responsibility is more than the South Florida Chapter's charge. It's also good business. And the Chapter's legacy.

- The Chapter would foster and enhance the reputation of Lake Worth as a leader in sustainable construction, education and community engagement.

- The Chapter's principal focus is to provide extensive education and training to professionals, residents, students and companies in southeast Florida. Through workshops, webinars, tours or more than 100 educational programs offered annually, the Chapter reaches thousands of individuals and companies. At each of those programs, the logo of the City of Lake Worth would be shown and the City thanked for its valued partnership.

(cont.)

- One of the USGBC's strongest initiatives is its Center for Green Schools program (www.centerforgreenschools.org). The Chapter is South Florida's direct pipeline to this program and its leader in this community. The goal of the program is to transform campus, community and career to embrace robust triple bottom line solutions that clarify and strengthen a healthy and dynamic balance between environmental, social and economic prosperity. The USGBC believes that the path to a sustainable future begins with students. The City's association with the Chapter would mean association with this critically important initiative.

  The USGBC is at the forefront of driving the transformation of all schools into sustainable and healthy places to live, learn, work and play. With that goal in mind, our nonprofit organization is a nationwide leader for the Green Apple Day of Service, which will take place this year on September 28 throughout the world. Its intent is to bring together individuals and communities to make changes in their schools and surrounding areas. The Chapter is the catalyst for this program here in South Florida. To learn more, visit http://mygreenapple.org/.

- In addition to Green Schools, the Chapter actively embraces a number of initiatives that are focused on transforming the way buildings and communities are designed, built and operated, enabling a sustainable and socially responsible, healthy and prosperous environment for people to live, work, learn and play. A few which may be of interest to the City of Lake Worth include our programs tied to Green Veterans, Emerging Professionals, and a focus on serving Faith-based and underserved communities.

- The Chapter's and the USGBC's resources, human and educational, would be the City of Lake Worth's. The USGBC has created valuable programs such as our Affordable Green Neighborhoods Grant Program, which awards funding and provides educational resources to developers of affordable housing developers who are pursuing certification using the LEED for Neighborhood Development rating system. With generous support from the Bank of America Foundation, the grant program recognizes affordable housing developers who are committed to building sustainable communities. Another ... Global Green USA, with staff support from USGBC, is using the LEED ND rating system as a framework for their sustainable neighborhood assessments under the US EPA's Building Blocks for Sustainable Communities Program. The USGBC has created a number of resources to help translate the LEED ND rating system into a format useful to local governments in their planning processes and development regulations, including::

  - Local Government Guide
  - Technical Guidance Manual for Sustainable Communities
  - Neighborhood Development Floating Zone
  - Citizens Advocacy Guide

  The Chapter is the pipeline to all of these resources and industry connections ... and more.

(cont.)

- Represented by hundreds of experts in green-building and sustainability initiatives and practices, the Chapter is a highly respected organization in the offices of elected officials -- locally, in Tallahassee and in Washington, DC. We get important appointments. We are sought out by those in a legislative capacity. Having the Chapter as a tangible partner through its presence in Lake Worth via an invitation by the City adds further credibility to Lake Worth's own advocacy efforts.

- The Chapter's educational offerings are popular and even critical to some professionals seeking CEUs. The Chapter can provide specially discounted (mate's rates, if you will) workshop and class accommodations to City of Lake Worth staff.

- The Chapter has a wide (and ever-expanding) circle of community partnerships (e.g., Habitat for Humanity, Rebuilding Together Broward, Smart Growth, AIA, BOMA, ULI ... and many more across the State of Florida, and these associations are plusses for all of the Chapter's partners, including potentially the City of Lake Worth. The Chapter's volunteer leadership builds bridges and open doors. Amongst our many roles is that as convener of best-in-class partners.

- In recognition of the invitation to conduct the Chapter's important work from a City of Lake Worth address, the Chapter would recognize the City as a Platinum Level partner. As such, the City would receive numerous benefits, including:

    - The City's logo proudly shown at all Chapter events, including the Annual Meeting of Members, the annual GalaVerde LEEDership Awards Program, the annual Tropical Green Conference, Board meetings ... and more.

    - The City's logo shown at all Branch meetings, tours and functions -- more than 100 well-publicized GREENworking occurrences annually offered by the Treasure Coast, Palm Beach, Broward, Miami-Dade, and Keys Branches. Additionally, the City would be recognized and thanked by the Branch Chairs at these programs. See http://www.usgbcsf.org/events for a listing of 2015 educational programs.

    - The City's logo and a strong bio for the municipality would be featured prominently on the Chapter's website -- see http://www.usgbcsf.org/donorscircle to review our current Sponsors Circle partners and their bios.

    - The City would be recognized annually in the Chapter-sponsored full-page ad in *Southeast Construction / ENR Magazine* in which we thank our Sponsors Circle members.

    - The City would be recognized on *each page* of the Chapter's popular website as a shining star amongst supporters of the Chapter.

    - The City would annually receive beautiful recognition/thanks awards (suitable for display) at the Chapter's prestigious GalaVerde awards ceremony, which annually draws in excess of 350 shakers and movers in the green and sustainability community, as well as numerous elected officials.

(cont.)

- The City would receive 10 complimentary tickets (one table) to the Chapter's annual GalaVerde LEEDership Awards Program ($1,250 value).

- The City would receive the opportunity to provide its marketing materials to attendees at the Chapter's Annual Meeting of Members.

- The City would receive 15 complimentary individual Chapter memberships to be used at the City's discretion -- for employees/co-workers or as gifts to valued or prospective clients and donors ($1,125 value). Each member appears in the Chapter's popular online membership directory, further shining a bright marketing spotlight on the City.

- Should the Chapter's office relocate to the halls of the City, the organization's meetings and their associated attendees would follow, including our monthly Board meetings and other gatherings of professionals and involved parties. Additionally, the Chapter's leadership would look for opportunities to bring Palm Beach Branch educational programs to the City, as well as other gatherings -- daytime and evening -- associated with the business of the Chapter, including local, regional, State and even potentially national meetings. All of these efforts would have the positive effect of exposing the Chapter's diverse audiences and friends to the City of Lake Worth, as well as drive revenue into the City's coffers.

- Lastly, the USGBC South Florida Chapter could potentially assist the City of Lake Worth on climate/sea level rise matters as follows:

1. Work with the Chamber of Commerce, Economic Development and other stakeholder groups to host two workshops (evening) on the following topics:
   a. The latest climate science relative to South Florida impacts, what the economic impacts are related to those projections, and what the various legal, regulatory and policy initiatives are impacting local governments on sea level rise planning in South Florida. (There are many new State and federal regulatory issues that are forcing local governments to start addressing these issues in planning and permitting.)
   b. What local governments in Florida are doing related to climate change and sea level rise, tools and suggested planning approaches, and what the benefits are from these efforts.
2. Facilitate one internal City workshop with staff and Commissioners on:
   a. Data needs for sea level rise planning (vulnerability, policy, adaptation).
   b. Approaches and tools.
   c. Developing a framework for the City to approach these issues from a technical and policy standpoint.

Such efforts would likely take 60+ hours of professional time on the part of our volunteers with subject-specific expertise to secure logistics, develop content and speakers for the workshops, etc. The Chapter's volunteers could pull together the content and design of these sessions, and the Chapter would have to have commitments from the City and Chamber and other stakeholder groups to spread the word about the events. Amongst benefits to the City and attendees:

(cont.)

- An understanding of the landscape of what various local governments are doing and what benefits they are (or will be) seeing from those efforts.
- A “reality check” on the data needs and vulnerability analyses that can be conducted based on available data the City has. This is important because there isn’t just one "model" that is plug-and-play to provide all of the answers. Basically, based on what Lake Worth has, what can the City achieve or what could the City achieve with better data? And what the benefit from that will be.
- What the benefits are that go beyond design criteria for infrastructure: e.g., points gained within FEMA’s Community Rating System program that translate into percentage reductions in flood insurance premiums in that particular community; better design criteria for private- and business-driven development and redevelopment; and ideas for "adaptation strategies" that are based on "no regret" given the uncertainty of future sea level rise projections the further out one projects,
- Real world "implementation mechanisms" so that any plan or initiative the City undertakes doesn’t just sit on a shelf.

The USGBC South Florida Chapter thanks you for the opportunity to present some of the envisioned plusses that would accrue to Lake Worth should this potential partnership be embraced by the leadership of the City. The Chapter would be honored to have its headquarters offices in this beautiful coastal city "where warm tropics meet hot topics" and "where the sun shines bright and the ideas shine even brighter". The City of Lake worth has demonstrated a noteworthy and admirable social and environmental consciousness, and I believe that the Chapter could bring further strength to those commitments, as well be value-added in other tangible and PR manners.

In closing, there is rising interest across the USA and the world in visiting and residing in dynamic cities that practice, teach and support environmental choices. Clearly, the green movement is far more than a passing fad. The Chapter's presence in Lake Worth can only impact positively and favorably on the City. Together, the Chapter and the City can help drive market transformation. Together, these two highly respected entities can not only work together to push the conversation forward, but build the future that the City's residents, businesses and leaders want and deserve.

Thanks again for the opportunity to outline some of these advantages. Should you have any questions, please don't hesitate to contact me.

Lee Cooke, Executive Director
USGBC South Florida Chapter
561-373-7367 / lcooke@usgbcsf.org

Build Green! Everyone Profits! Consider the environment, please, before printing this email!
Ask me about our wonderful volunteers ... and how to get involved in our Chapter family!

PS ... In an effort to reduce our carbon footprint and paper consumption, the USGBC South Florida Chapter conducts most of its business communications via email. If anyone desires to have a hardcopy of this communiqué on Chapter letterhead, please let me know and I would be pleased to generate one for you.

CITY OF LAKE WORTH
7 North Dixie Highway · Lake Worth, Florida 33460 · Phone: 561-586-1600· Fax: 561-586-1750

DRAFT
AGENDA
CITY OF LAKE WORTH
CITY COMMISSION MEETING
CITY HALL COMMISSION CHAMBER
TUESDAY, MARCH 17, 2015 - 6:00 PM

1. **ROLL CALL:**

2. **INVOCATION:** Ted Brownstein, Baha'i Faith of Lake Worth

3. **PLEDGE OF ALLEGIANCE:**

4. **AGENDA - Additions/Deletions/Reordering:**

5. **PRESENTATIONS:** (there is no public comment on Presentation items)

   A. Downtown Jewel Neighborhood Association update

6. **COMMISSION LIAISON REPORTS AND COMMENTS:**

7. **PUBLIC PARTICIPATION OF NON-AGENDAED ITEMS AND CONSENT AGENDA:**

8. **APPROVAL OF MINUTES:**

9. **CONSENT AGENDA:** (public comment allowed during Public Participation of Non-Agendaed items)

   A. Authorize the use of outside legal services for Fiscal Year 2015

10. **PUBLIC HEARINGS:**

    A. Ordinance No. 2015-02 - Second Reading and Second Public Hearing - amend the Comprehensive Plan to include a water supply plan and amend various elements

11. **UNFINISHED BUSINESS:**

12. NEW BUSINESS:

A. Hector Samario of Siemens approval of Energy Performance Contracting Services

13. LAKE WORTH ELECTRIC UTILITY:

A. PRESENTATION: (there is no public comment on Presentation items)

1) Update on the electric utility system

B. CONSENT AGENDA: (public comment allowed during Public Participation of Non-Agendaed items)

C. PUBLIC HEARING:

D. NEW BUSINESS:

1) Purchase various poles for inventory usage throughout fiscal year 2015

14. CITY ATTORNEY'S REPORT:

15. CITY MANAGER'S REPORT:

April 7, 2015 – draft Commission agenda

16. ADJOURNMENT:

If a person decides to appeal any decision made by the board, agency or commission with respect to any matter considered at such meeting or hearing, he or she will need a record of the proceedings, and that, for such purpose, he or she may need to ensure that a verbatim record of the proceedings is made, which record includes the testimony and evidence upon which the appeal is to be based. (F.S. 286.0105)

NOTE: ONE OR MORE MEMBERS OF ANY BOARD, AUTHORITY OR COMMISSION MAY ATTEND AND SPEAK AT ANY MEETING OF ANOTHER CITY BOARD, AUTHORITY OR COMMISSION.