Lake Worth, Florida. The Art of Florida Living.sm

7 North Dixie Highway
Lake Worth, FL 33460
561.586.1600

AGENDA
CITY OF LAKE WORTH
CITY COMMISSION WORK SESSION
TUESDAY, FEBRUARY 09, 2016 - 6:00 PM

1. **ROLL CALL:**

2. **PLEDGE OF ALLEGIANCE:** Led by Vice Mayor Scott Maxwell

3. **UPDATES/FUTURE ACTION/DIRECTION:**

   A. MPO Draft Complete Streets Policy - estimated time 30 minutes

   B. Discuss City advisory board attendance policy - estimated time 30 minutes

   C. 26.4 kV distribution and sub-transmission system upgrade - estimated time 1.5 hours

4. **ADJOURNMENT:**

If a person decides to appeal any decision made by the board, agency or commission with respect to any matter considered at such meeting or hearing, he or she will need a record of the proceedings, and that, for such purpose, he or she may need to ensure that a verbatim record of the proceedings is made, which record includes the testimony and evidence upon which the appeal is to be based. (F.S. 286.0105)

NOTE:ONE OR MORE MEMBERS OF ANY BOARD, AUTHORITY OR COMMISSION MAY ATTEND AND SPEAK AT ANY MEETING OF ANOTHER CITY BOARD, AUTHORITY OR COMMISSION.

Palm Beach MPO
Draft Complete Streets Policy

February 9, 2016

www.PalmBeachMPO.org

2300 North Jog Road ● 4th Floor ● West Palm Beach ● FL 33411 ● 561-684-4170

What are Complete Streets?

Complete Streets are streets for everyone. They are designed and operated to enable safe access for all users, including pedestrians, bicyclists, motorists and transit riders of all ages and abilities.

Why Complete Streets? To Improve Safety

Palm Beach County is in FDOT's top 10 focus counties for pedestrian & bicycle safety.

Florida Department of Highway Safety and Motor Vehicles 2014 Traffic Crash Facts Report ranked Palm Beach County:

4th Highest in bicyclist injuries (513) & bicyclist fatalities (7)

4th Highest in pedestrian fatalities (35)

5th Highest in pedestrian injuries (564)

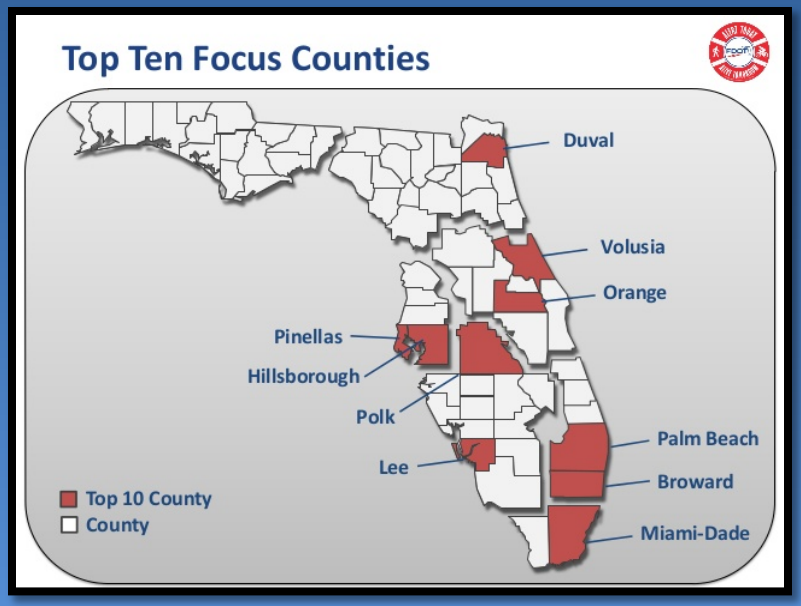

Why Complete Streets? Change mode split

How do we get to work?

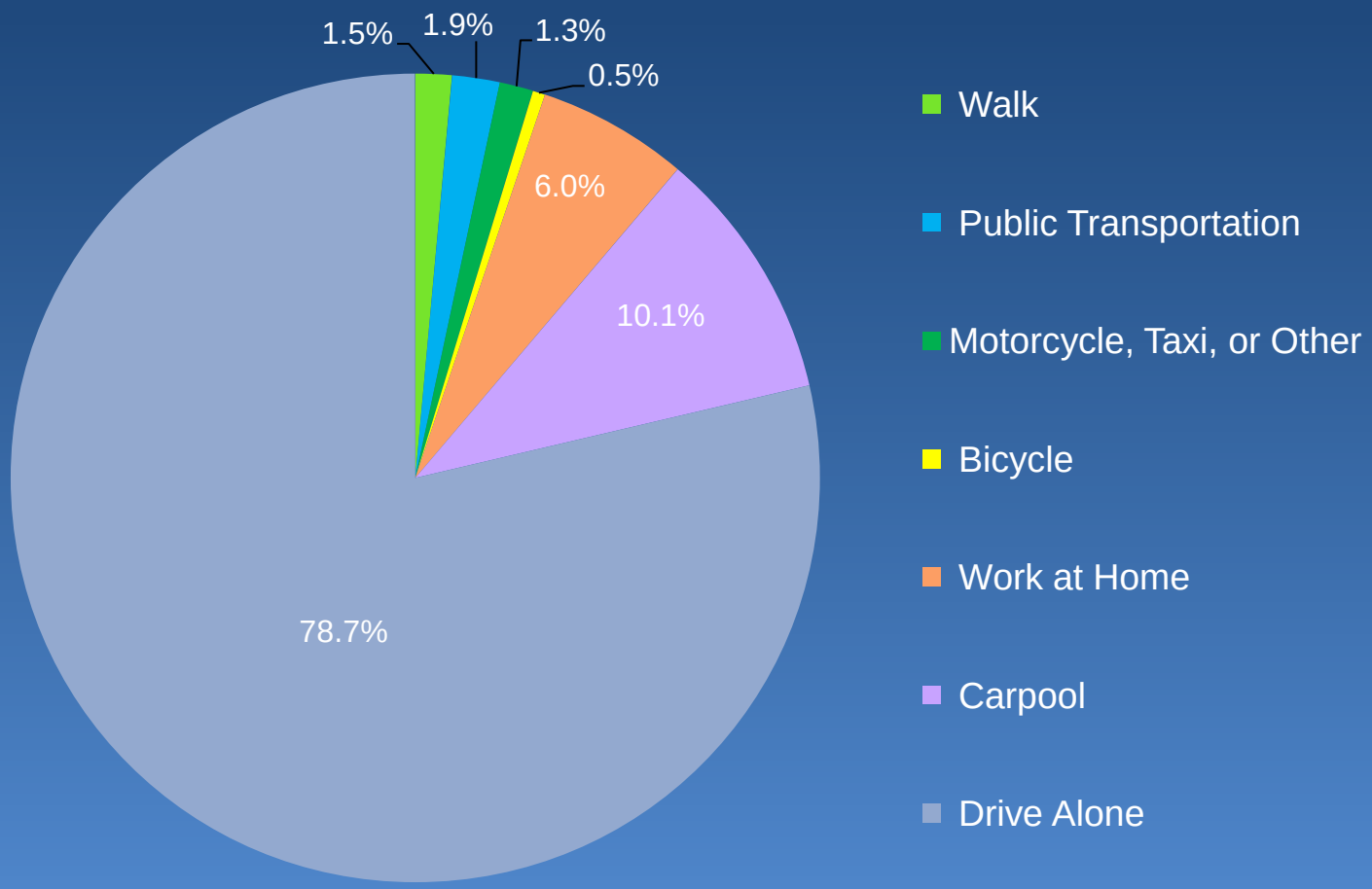

Source: American Community Survey 3 Year Estimates, 2011-2013

Why Complete Streets? Local Economy

Walkable urban regions produce more

U.S. walkable regions have a **41%** higher GDP over non-walkable regions

Walkable communities are more affordable

Walkable communities spend **43%** on housing and transportation
Non-walkable areas spend **48%**

Complete Streets create strong communities

+ Increase support of local businesses
+ Expand employment opportunities
+ Spur reinvestment into the local economy

Why Complete Streets? Health & Environment

Complete Streets promote physical activity

People who live in neighborhoods with sidewalks on streets are 47% more likely to be active at least **30** minutes a day

Complete Streets improve academic performance

Increased physical activity promotes better grades, school attendance, cognitive performance, and classroom behavior

Complete Streets reduce emissions

If each resident of an American community of **100,000** replaced one car trip with one bike trip just once a month, it would cut carbon dioxide (CO_2) emissions by **3,764 tons** of per year in the community

Florida Complete Streets Policies

1. Auburndale
2. Bartow
3. Bonita Springs
4. Broward County
5. Cape Canaveral
6. Cocoa
7. Davenport
8. Deerfield Beach
9. Dundee
10. Eagle Lake
11. FDOT
12. Fort Lauderdale
13. Fort Meade
14. Fort Myers
15. Frostproof
16. Grant-Valkaria
17. Haines City
18. Highland Park
19. Hillcrest Heights
20. Hillsborough County MPO
21. Jacksonville
22. Lake Alfred
23. Lake Hamilton
24. Lake Wales
25. Lakeland
26. Lee County MPO
27. Lee County
28. Martin County
29. Miami-Dade County
30. Miami
31. Mulberry
32. Orange City
33. Palm Bay
34. Palmetto
35. Florida-Alabama TPO
36. Polk City
37. Polk County TPO
38. Polk County
39. Rockledge
40. State of Florida (Florida Statute 335.065)
41. Tallahassee
42. Tampa
43. Titusville
44. Space Coast TPO
45. West Palm Beach
46. Winter Haven
47. Winter Park

Complete Streets Policy Purpose

- Accommodate all users in state and federally funded transportation projects programmed in the Transportation Improvement Program (TIP)
- Create a connected complete street network
- Recognize that every trip begins and ends as a pedestrian and that all streets and users are different
- Establish a Transportation Hierarchy for project design

Transportation User Consideration

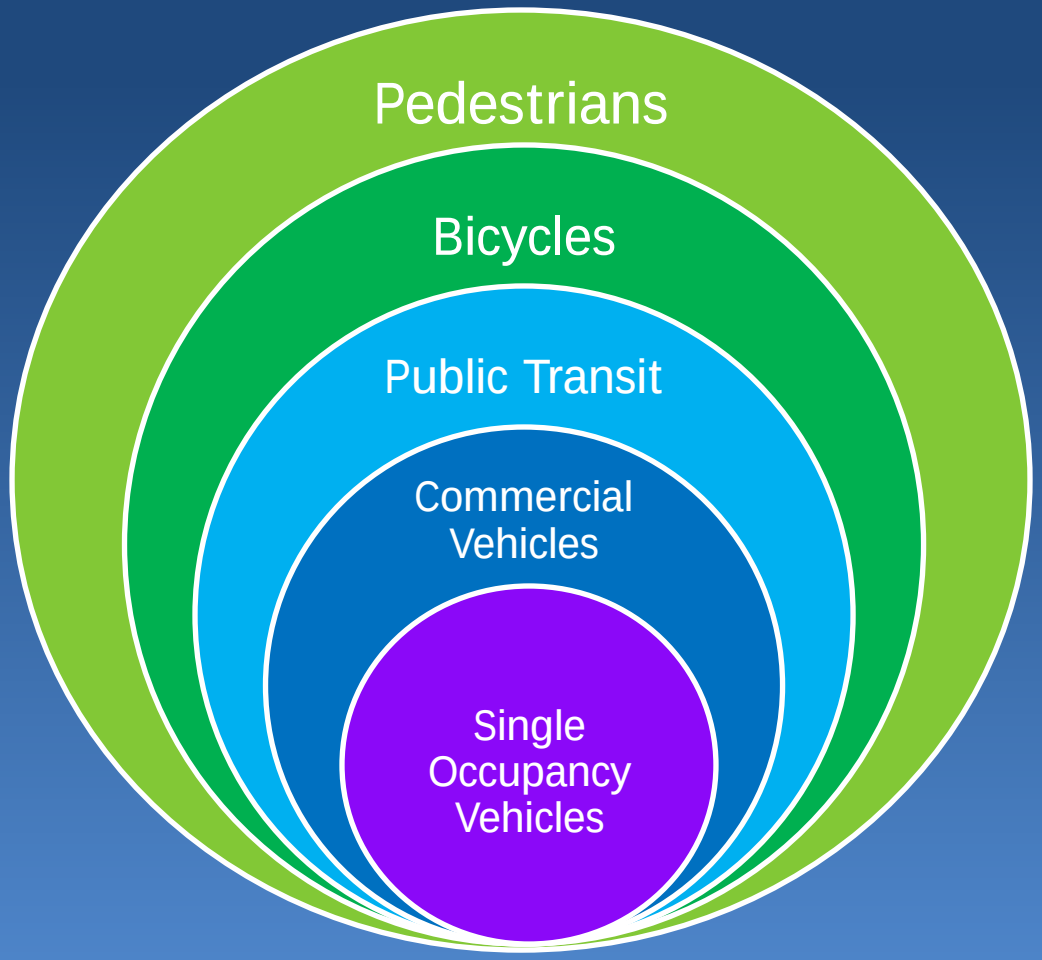

Draft Complete Streets Policy Statement:

The Palm Beach MPO aims to achieve a safe and convenient transportation network by implementing Complete Streets within the context of our county's diverse communities. The Palm Beach MPO will seek to promote Complete Streets by ***prioritizing the funding*** *of Complete Street infrastructure projects,* ***providing educational opportunities****; and* ***encouraging local jurisdictions to adopt and implement local Complete Streets policies****.*

Complete Streets Policy is consistent with MPO's adopted Long Range Transportation Plan (LRTP) Goals, Objectives and Values

To evaluate the effective implementation of the policy, the following measurable objectives will be monitored:

Objective	Current Value	2025 Target	2040 Target
Reduce the number[1] of…			
Pedestrian injuries	564	400	200
Pedestrian fatalities	35	17	10
Bicyclist injuries	513	350	250
Bicyclist fatalities	7	3	2
Increase the commuter mode choice[2] for…			
Pedestrians	1.5%	3.5%	5%
Bicycle	0.5%	1.5%	3%
Public Transportation	1.9%	3%	5%
Increase the number of local jurisdictions that have an adopted Complete Streets Policy	1	13	20
Provide annual workshops and events to promote Complete Streets and raise awareness of bicycle and pedestrian safety	0	2	4

Notes: 1. Current values obtained from Florida Dept. of Hwy Safety and Motor Vehicles, 2013 Annual Report
2. Current values obtained from American Community Survey 3 year estimates, 2011-2013

Applicability

State and federally funded transportation projects that are included in the Palm Beach MPO's TIP. Project exemptions will be considered on a case by case basis.

Timeline & Next Steps

- Draft Complete Streets Policy Presented to MPO Board & Committees – Sept. 2015
- Complete Streets Workshop for Key Stakeholders – Dec. 2015
- Working group meets to refine MPO draft policy & determine next steps – Jan. 2016
- Final MPO Complete Streets Policy to MPO Board for Adoption – March 2016
- Palm Beach MPO Complete Streets Working Group – Ongoing
- Municipalities are encouraged to adopt local Complete Streets Policy - Ongoing

Questions?

Valerie Neilson
vneilson@palmbeachmpo.org

AGENDA DATE: February 9, 2016, Work Session **DEPARTMENT:** City Commission

---

EXECUTIVE BRIEF

TITLE:
Discussion of City advisory board attendance policy

SUMMARY:
This item is to discuss specific types of absenteeism and if changes are needed to the policy.

BACKGROUND AND JUSTIFICATION:
In the last two years there has been vacancies on the City advisory boards due to excess of absenteeism. The most common reason for absenteeism is illness of the board member or illness of a board member's loved one, spouse, partner, or direct relative, sometimes requiring the board member to travel out of the state or out of the country. Currently, the attendance policy of all city advisory board has no provision for any absence due to illness or death of a direct relative. Staff is looking for discussion on reviewing the absentee policy for all City advisory boards.

Currently, the City's attendance policy for 11 advisory boards state that if any member is absent for three consecutive regularly scheduled meetings or 20% of a regularly scheduled meeting held within any 12-month period, the member's office shall be declared vacant.

Additionally, the City's attendance policy for the Planning and Zoning and Historic Resource Preservation Board's state that if any member is absent for three consecutive regularly scheduled meetings or 25% of their public meetings held within any 12-month period, the member's office shall be declared vacant.

Staff researched attendance policies in neighboring municipalities and found that some of them do not stipulate an attendance percentage, instead they estipulate that a board member cannot exceed three consecutive meetings on any 12-month period.

Staff is suggesting the advisory boards' attendance policy more closely mimic the Florida Attorney General's Opinion and City Commission's policy allowing for an absent member to participate by telephone due to extraordinary circumstances as defined as a serious illness, receiving medical treatment, or unable to attend due to being physically disabled or amend the City advisory boards' attendance policy to allow board members to have one (1) excused absence in any 12-month period due to board member's illness requiring his/her hospitalization or due to the loss of a loved one, spouse, partner, or direct relative, requiring the board member to travel out of state or out of the country.

DIRECTION:
Based on the decision of the Commission.

ATTACHMENT(S):

Fiscal Impact Analysis - not applicable
City of Lake Worth absentee policy
Town of Lantana absentee policy
City of Boynton Beach absentee policy

CITY OF LAKE WORTH ADVISORY BOARDS – ATTENDANCE POLICY

RECREATION ADVISORY BOARD
Ord. No. 2008-14, effective 7/10/08, amended attendance requirements: a member who fails to attend three consecutive regularly scheduled meetings or 20% of regularly scheduled meetings held within a 12-month period shall have his/her seat declared vacant by the City Clerk and the City Commission shall promptly fill such vacancy.

TREE BOARD
Ord. No. 2008-14, effective 7/10/08, amended attendance requirements: a member who fails to attend three consecutive regularly scheduled meetings or 20% of regularly scheduled meetings held within a 12-month period shall have his/her seat declared vacant by the City Clerk and the City Commission shall promptly fill such vacancy.

COMMUNITY REDEVELOPMENT AGENCY
Ordinance No. 2008-14, effective 7/10/08, amended attendance requirements: if any member of the board shall fail to be present at three (3) consecutive regularly scheduled meetings or at twenty (20) percent of the regularly scheduled meetings of the board held within any 12-month period, the city clerk shall schedule the matter for hearing before the city commission.

CONSTRUCTION BOARD OF ADJUSTMENT AND APPEALS
Ord. No. 2008-14, effective 7/10/08, amended attendance requirements: a member who fails to attend three consecutive regularly scheduled meetings or 20% of regularly scheduled meetings held within a 12-month period shall have his/her seat declared vacant by the City Clerk and the City Commission shall promptly fill such vacancy.

ELECTRIC UTILITY ADVISORY BOARD
Section 2-238 of the Lake Worth Code of Ordinances: If any member of the Board shall fail to be present at three (3) consecutive regularly scheduled meetings or at twenty (20) percent of the regularly scheduled meetings of the Board held within any 12-month period, the City Clerk shall declare the member's office vacant, and the City Commission shall promptly fill such vacancy.

FINANACE ADVISORY BOARD
Ord. No. 2010-03, effective 2/26/10, a member who fails to attend three consecutive regularly scheduled meetings or 20% of regularly scheduled meetings held within a 12-month period shall have his/her seat declared vacant by the City Clerk and the City Commission shall promptly fill such vacancy.

LIBRARY BOARD
Ord. No. 2008-14, effective 7/10/08, amended attendance requirements: a member who fails to attend three consecutive regularly scheduled meetings or 20% of regularly scheduled meetings held within a 12-month period shall have his/her seat declared vacant by the City Clerk and the City Commission shall promptly fill such vacancy.

BOARD OF TRUSTEES EMPLOYEES' RETIREMENT SYSTEM
3C, Article II, Section 16-18 - Any elected or appointed trustee who does not attend three (3) successive regular meetings or at twenty (20) percent of the regular meetings of the board held within any 12-month period shall automatically forfeit his or her position as trustee. Ord. No. 2003-25, enacted 8/5/03

BOARD OF TRUSTEES- POLICE RETIREMENT SYSTEM
Ord. No. 2008-14, effective 7/10/08, amended attendance requirements: a member who fails to attend three consecutive regularly scheduled meetings or 20% of regularly scheduled meetings held within a 12-month period shall have his/her seat declared vacant by the City Clerk and the City Commission shall promptly fill such vacancy.

BOARD OF TRUSTEES FIREFIGHTERS' PENSION TRUST FUND and
BOARD OF TRUSTEES FIREFIGHTERS' PENSION TRUST FUND - DIVISION 2

Ord. No. 2008-14, effective 7/10/08, amended attendance requirements: a member who fails to attend three consecutive regularly scheduled meetings or 20% of regularly scheduled meetings held within a 12-month period shall have his/her seat declared vacant by the City Clerk and the City Commission shall promptly fill such vacancy.

HISTORIC RESOURCES PRESERVATION BOARD

Ord. 2013-34 - Section 23.2, effective August 16, 2013 amends absentee policy to three (3) consecutive regularly scheduled meetings or at twenty five percent (25%) of the public meetings of the Board held within any 12-month period, the City clerk shall declare the member's office vacant and the City Commission shall promptly fill such vacancy.

PLANNING AND ZONING BOARD

Ord. 2013-34 - Section 23.2, effective August 16, 2013 deletes alternate members and increases membership to seven (7) board members and amends absentee policy to three (3) consecutive regularly scheduled meetings or at twenty five percent (25%) of the public meetings of the Board held within any 12-month period, the City clerk shall declare the member's office vacant and the City Commission shall promptly fill such vacancy.

Sec. 2-18. - Administrative boards, absentee policy.

(a) Members of boards and commissions shall be automatically removed for lack of attendance. Lack of attendance is defined as a failure to attend three (3) consecutive meetings or a failure to attend at least two-thirds of the meetings scheduled during a calendar year. Participation for less than three-fourths (¾) of a meeting shall be the same as a failure to attend a meeting. Members removed pursuant to this section shall not continue to serve on the board or commission and such removal shall create a vacancy. Vacancies shall be filled for the unexpired term in the manner in which original appointments are required to be made.

(b) Two (2) alternates shall be appointed to serve on each of the town's administrative boards; such alternates shall take the place of a regular board member in his absence whenever contacted to do so. All alternates are encouraged to attend the regular board meetings in order to ensure familiarity with the procedures utilized by the particular board.

(c) This section shall apply to all town administrative boards and commissions presently constituted and those hereafter created, including, but not limited to:

Fire code board of appeals.

Building board of adjustment and appeals.

Town planning commission.

Zoning board of appeals.

Code enforcement board.

Lantana Nature Preserve Commission.

Greater Lantana School Community Education Council.

(Ord. No. O-12-2012, § 3, 7-23-12)

Editor's note— Ord. No. O-12-2012, § 3, adopted July 23, 2012, repealed § 2-18, in its entirety and enacted new provisions to reads as herein set out. Prior to this amendment, § 2-18, pertained to similar subject matter. See Code Compartive Table for derivation.

Print

Boynton Beach, FL Code of Ordinances

Sec. 2-16. City boards and commissions; minimum qualifications for appointment, membership.

(a) In order to qualify for appointment to and to serve as a member of any board or committee of the city, an individual must be an elector of Palm Beach County, Florida.

(b) In selecting individuals to serve on boards and committees of the city, preference shall be given to individuals who are residents of the City of Boynton Beach, provided however, that non-residents who own and operate businesses located within the city may also qualify for appointment provided they possess qualifications or experience uniquely suited to deal with the subject matter over which the board or committee has subject matter review or power.

(c) No currently serving member of any board or committee shall be disqualified for falling to meet the minimum qualifications set forth in this section. However, at the expiration of the term of each current board of committee member, the vacancy created by that expiring term shall be filled with an individual qualified in accordance with the provisions of this section.

(d) Notwithstanding any other provision of city code or procedural rule, no alternate member of any city board may serve in the capacity of its Chairperson, Vice Chair, Chair Pro-Tem, or hold any other office on said board.

(e) No alternate member may be moved to a regular member of the Board unless appointed by the City Commission.

(f) When a member of any Board, with the exception of those Boards that have regularly scheduled meetings more than once a month, has missed three regular monthly meetings for any reason within one annual board term, that member will be notified that one additional absence will cause his/her Board membership to be terminated and a replacement will be appointed at the time of the next absence. Those boards that have regularly scheduled meetings more than once a month shall be permitted to have six absences during any one annual board term. The seventh absence shall result in removal from the board.

(g) No person shall be appointed to a City Board without the person first submitting an application for appointment. No application for appointment shall be considered by the City Commission until the application form has been fully completed and signed by the applicant. All applications for appointment to a City Board shall be on a form authorized by the City Commission. The City Clerk shall review all applications for completeness prior to submitting them to the City Commissioners for consideration.

(1) Prior to appointment, a City Commissioner may request written confirmation of the qualifications listed by any applicant for appointment. When a request for confirmation of the qualifications is made by a City Commissioner prior to appointment, the appointment shall be delayed until the information requested is submitted and made available to the members of the City Commission. No person shall be appointed to a City Board when that person is unable to substantiate the qualifications listed on their application.

(2) A member of the City Commission may request written confirmation of qualifications of a person who has been appointed by the Commission to a City Board. A request for confirmation shall be made by the City Commissioner to the City Clerk. The City Clerk shall make written request to the Board member. A copy of the Clerk's written request shall be provided to all members of the City Commission.

(3) Except as otherwise provided by law, a Board member who does not submit documentation of the qualifications listed on the Board member's application for appointment within thirty (30) days of receipt of the Clerk's written request, or who submits documentation which contradicts, negates, or fails to substantiate the information listed on the Board member's application shall automatically be removed from their Board position.

(4) A person who is removed from a City Board pursuant to the procedures set forth in this section shall not be subject to reappointment to any City Board for a period of thirty-six (36) months.

(i) The City Commission shall fill vacancies on city boards by making appointments in December following the city's November commission elections, commencing with the City Commission election of November, 2007. To the extent necessary to transition from April to November appointment, the term of office for any board appointee which would expire in April, 2008 or any April thereafter shall instead expire in the preceding November.

(Ord. No. 90-11, §§ 1—3, 6-19-90; Ord. No. 98-48, § 1, 12-15-98; Ord. No. 99-03, § 1, 1-19-99; Ord. No. 01-60, § 1, 12-18-01; Ord. No. 03-024, § 2, 6-17-03; Ord. No. 07-004, § 2, 1-16-07)

***Editor's note**-Ord. No. 90-11, §§ 1—3, adopted June 19, 1990, did not specifically amend the Code, but has been included as § 2-16 by the editor.*

***Cross references**-Procedures for boards, commissions, etc., with independent purchasing authority, § 2-61; code compliance board, § 2-72 et seq.; building board of adjustment and appeals,* § 5.153 et seq. ; cemetery, board of governors, § 6-4 et seq.; library board, § 12-1 et seq.; parks and recreation board, § 16-1 et seq.; planning and zoning board, § 19-1 et seq. ; community appearance board, § 19-38 et seq .; technical review board, § 19-63 et seq.

Sec. 2-17. City boards, appointment of alternate members.

All boards of the city with seven (7) or more members, shall have a minimum of two (2) alternate members, to be appointed by the city commission. All boards of the city with less than seven (7) members, shall have a minimum of one (1) alternate member, to be appointed by the city commission. The alternate members shall hold the same general qualifications as regular members to be eligible for appointment. The term of alternate members, if not otherwise provided, shall be for one (1) year and such appointees may be reappointed.

(Ord. No. 92-55, § 1, 11-17-92)

***Editor's note**-Ord. No. 92-55, § 1, adopted Nov. 17, 1992, enacted provisions pertaining to appointment of alternate members to city boards. Such provisions have been designated by the editor as § 2-17.*

POLICY FOR REPORTING ATTENDANCE IN THE OFFICIAL MINUTES

The Chairman of each Board and Commission should take steps to identify, at the beginning of each meeting, the regular members in attendance at the meeting and if necessary the alternates who will be substituting for regular members and be voting on issues that come before the Board of Commission.

In addition, the City Clerk's Office has instructions as they prepare minutes of meetings, to clearly identify those who are present in three categories as follows:

1. Those regular members who are in attendance and participating in the meeting.

2. Those alternate members who are in attendance and have been designated by the Chairman to participate as voting members at the meeting.

3. Those alternate members who are in attendance for discussion purposes only but not participating as voting members of the Board or Commission.

In addition, the minutes should show clearly those members, both regular and alternate, who are absent and whether or not on the event of an absence, prior notification was provided, and those City staff members who are in attendance as staff serving the Board or Commission.

Also the City Clerk's office will indicate other guests who are at the meeting i.e., members of the Mayor and City Commission, representatives of the media, recognized members of other Boards and Commissions.

This procedure for reporting in the minutes will standardize the minute taking procedure in regard to attendance and will clarify, for future reference, those members of the Boards and Commissions who are participating in the meeting as voting members. This procedure should clarify the formal record of board meetings for future reference.

orient1

CITY OF BOYNTON BEACH
POLICY FOR PARTICIPATION BY BOARD ALTERNATES AT BOARD MEETINGS

The following adopted outline is presented as the proper role for Board Alternates and was adopted by the City Council on June 7, 1983:

1. City Commission Expectations:

   Alternate will attend meetings so that they will be aware of:
   - Board Procedure
   - Board Policy
   - Type of issues coming to the Board for consideration
   - Nature of Board decisions

2. Procedure for Alternates:

   When at a meeting as an Alternate, the Alternate will:

   a. Take a seat separate from the regular Board seats, but in front of the room or close to the meeting table.

   b. Not vote unless acting as a substitute for a regular Board Member

   c. Be given a limited opportunity, by the Chairman, to ask questions for information of the Board and the Alternate

   d. Be given a limited opportunity, by the Chairman, to make suggestions on issues that are involved with the particular meeting

The Alternate will fully participate when a Board Member is unable to attend or excuses himself/herself from participation on a particular issue. The regular Board Member must indicate his/her reason for not participating in a matter and the Chairman should excuse the regular Board Member prior to the Alternate's participation.

If there is more than one alternate present at a meeting, the Chairman will select the Alternate to participate by rotation, unless an Alternate is appointed or elected to serve for a specific Regular Member.

orient2

AGENDA DATE: February 9, 2016, Work Session **DEPARTMENT:** Electric Utility

---

EXECUTIVE BRIEF

TITLE:
26.4 kV distribution and sub-transmission system upgrade

SUMMARY:
Review the proposed design aspects of the Long Range Plan to upgrade the City of Lake Worth Utilities distribution voltage class.

BACKGROUND AND JUSTIFICATION:
The City of Lake Worth Electric Utility's current 4.16 kV distribution system is in dire need of an upgrade. This outdated system has surpassed its intended function for decades, thereby reducing system flexibility, reliability, and dependability. The Electric Utility staff has explored a number of options and their direct financial and empirical impacts to the electric grid. After much review and analysis, it was determined that most efficient and correct option is to move to a 26.4 kV transmission system. The Electric Utility will work with an independent and experienced engineering consultant to furnish a performance study to serve as a peer review resulting in a complete design.

The long range improvement plan for the Electric Utility primarily focuses on a system configuration that affords maximum reliability while utilizing components from the already upgraded system. When complete, the system will be comprised of one 138 kV tie line, a 26.4 kV sub-transmission system, and a 26.4 kV distribution system. This particular plan does not address power supply or generation. The plan design includes a 26.4 kV sub-transmission system that ties switch stations in a looped system; affording each switch station (a substation without a transformer) with an alternate power source. This system will not be used to directly serve customer load, rather it will be a fail-safe method of reliability. By looping switch stations together and properly sizing station equipment to serve design and emergency load, it will be possible to quickly, safely, and reliably take switch stations out of service during storm events, natural disasters, and preventive maintenance and testing functions. These operations can be done seamlessly without prolonged interruption to customers' service.

There are two stages to the long range improvement plan for the electric utility. Stage one includes projects associated with design and construction of the 26.4 kV distribution system, including optimizations to the existing 26.4 kV feeders. Stage two encompasses the design and construction of the 26.4 kV sub-transmission system loop.

Stage One - 26.4 kV Distribution Circuits Upgrade

In an attempt to streamline conversion process, two of the substations (11th Ave North and 15th Ave South) will be eliminated. In addition, 7th Ave North substation will be replaced with a new switch station construction at the Elizabeth switch station location. Since the project scope calls for 26.4 kV

distribution, the need for substation transformers at each switch yard location is eliminated. Instead, single-phase regulators will be installed to regulate outgoing customer voltage.

New bus structures have been implemented in this design to accommodate for the higher distribution voltage. At 26.4 kV (phase – phase), ANSI C37.32-2002 Table 5 dictates that the phase spacing for the rated maximum voltage shall maintain a 36 inch centerline to centerline phase spacing. Current 4.16 kV bus structures phase spacing is 18 inches, hence, not suitable for any voltage higher than 8.3 kV.

Stage Two - Design and Construction of the 26.4 kV Sub-Transmission System Loop.

Once completed, the proposed electric grid will be in a standby looped configuration to increase reliability and switching capabilities. The sub-transmission and distribution systems will only require three substation transformers; A 55 MVA and a 50 MVA at Main Yard Substation and a 60 MVA at Canal Substation. This will greatly reduce maintenance, repairs, electric losses, and number of spare transformers in the event of emergencies.

As part of a looped configuration, each switch yard will have an alternate sub-transmission tie. This will facilitate switching due to load accommodations as well as for emergency and disaster recovery. Sub-transmission circuits will be dedicated as such:

a. Transfer all existing sub-transmission circuit load to feeder circuits
b. Strategically place gang-operated switches and reclosers for sectionalizing purposes

Currently, transmission voltage is stepped down from 138 kV to 26.4 kV at the Main and Canal Substations. The 26.4 kV system is used to serve customer load as well as serve as sub-transmission to the 26.4/4.16 kV substations. The existing distribution system is nearly equally divided between 26.4 kV and 4.16 kV. To date, the 4.16 kV electric system is primarily located east of the I-95 and is comprised of nine 26.4/4.16 kV substations. The 26.4 kV distribution circuits are mainly located west of the I-95 and are served from Canal Substations. There are also a number of 26.4 kV distribution pockets scattered between neighboring 4.16 kV distribution circuits East of I95.

The mechanics of the sub-transmission build out will take advantage of the fact that approximately one half of the distribution system was initially built to 26.4 kV. Previous installations will be moved and reused. By separating the 26.4 kV sub-transmission from the distribution system and developing a separate sub-transmission system, local 26.4 kV distribution faults that currently cause outages and equipment damage will be greatly minimized. The remainder of the long range improvement plan is focused on serving customer load. The 4.16 kV portion of the distribution system will be converted to 26.4 kV.

Some of the 4.16 kV system is configured such that it can be easily converted to 26.4 kV, since previous reinsulating projects were upgraded up to 35 kV specification. When designs are in the final stages, coordination with customers, home owner associations, and construction teams will provide valuable decision making information.

The construction of the plan will be accomplished primarily with outside contractor(s). This will allow the City to move forward with this project/upgrade at a reasonable and concise rate.

On December 2, 2015, this agenda item was recommended by the Electric Utility Advisory Board.

ATTACHMENT(S):

1. 26.4 kV Distribution Voltage report

FISCAL IMPACT ANALYSIS

Budgetary cost associated with the 26.4 kV distribution and sub-transmission system upgrade

Description	Budgetary Cost
Switch Station Construction	$7.6M
T&D Materials	$3.5M
T&D contracted labor	$2.9M
Sub-transmission Construction	$0.75M
Total Budgetary Cost	**$14.75M**

A. Department Fiscal Review: John Borsch, Electric Utility Director

DISTRIBUTION VOLTAGE UPGRADE PROJECT

Purpose and Scope

ABSTRACT

Detailing the proposed design aspects of a Long Range Plan to upgrade the City of Lake Worth Utilities' distribution voltage class

George Guirguis

Jean St. Simon

12/2/2015

TRANSMISSION

Purchased power is transmitted to the City of Lake Worth (CLW) electric grid via one 138 kV external electrical power supply source through Orlando Utilities Commission (OUC) and interconnected to Florida Power & Light (FP&L) grid. The transmission line enters the system at the city owned Hypoluxo Station, then service is extended from that point of entry to the Main and Canal Substations via a 138 kV overhead and underground line owned and operated by CLW. The Tom G. Smith Plant generation is connected to the City Electric system via 138 kV and 26.4 V at the Main Substation.

SUB-TRANSMISSION & DISTRIBUTION

Voltage is stepped down from 138 kV to 26.4 kV at the Main and Canal Substations. The 26.4 kV system is used to serve customer load as well as serve as sub-transmission to the 26.4/4.16 kV substations. The existing distribution system is nearly equally divided between 26.4 kV and 4.16 kV. Currently, the 4.16 kV electric system is primarily located east of the I-95 and is comprised of nine 26.4/4.16 kV substations.

PLAN

The long range improvement plan for the electric utility primarily focuses on a system configuration that affords maximum reliability while utilizing components from the already upgraded system. When complete, the system will be comprised of one 138 kV tie line, a 26.4 kV sub-transmission system, and a 26.4 kV distribution system. This particular plan does not address power supply or generation.

The plan design includes a 26.4 kV sub-transmission system that ties switch stations in a looped system; affording each switch station (a substation without a transformer) an alternate power source. This system will not be used to directly serve customer load, rather it will be a fail-safe method of reliability. By looping switch stations together and properly sizing station equipment to serve design and emergency load, it will be possible to quickly, safely, and reliably take switch stations out of service during storm events, natural disasters, and preventive maintenance and testing functions. These operations can be done seamlessly, without prolonged interruption to customers' service.

The mechanics of the sub-transmission build out will take advantage of the fact that approximately one half of the distribution system was initially built to 26.4 kV. Previous installations will be moved and reused. By separating the 26.4 kV sub-transmission from the distribution system and developing a separate sub-transmission system, local 26.4 kV distribution faults that currently cause outages and equipment damage will be greatly minimized.

The remainder of the long range improvement plan is focused on serving customer load. The 4.16 kV portion of the distribution system will be converted to 26.4 kV. The current 4.16 kV system is sorely deteriorated, over loaded, and is inflexible from a switching standpoint. Some of the 4.16 kV system is configured such that it can be easily converted to 26.4 kV, since previous reinsulating projects were upgraded up to 35 kV specification.

When designs are in the final stages, coordination with customers, home owner associations, and construction teams will provide valuable decision making information. The construction of the plan will be accomplished primarily with outside contractor(s). This will allow the City to move forward with this project/upgrade at a reasonable and concise rate.

PROJECT DESCRIPTIONS

There are two stages to the long range improvement plan for the electric utility. Stage one includes projects associated with design and construction of the 26.4 kV distribution system, including optimizations to the existing 26.4 kV feeders. Stage two encompasses the design and construction of the 26.4 kV sub-transmission system loop.

Stage One - 26.4 kV Distribution Circuits Upgrade

In an attempt to streamline conversion process, two of the substations (11th Ave North and 15th Ave South) will be eliminated. In addition, 7th Ave North substation will be replaced with a new switch station construction at the Elizabeth switch station location. Since the project scope calls for 26.4 kV distribution, the need for substation transformers at each switch yard location is eliminated. Instead, single-phase regulators will be installed to regulate outgoing customer voltage.

New bus structures have been implemented in this design to accommodate for the higher distribution voltage. At 26.4 kV (phase – phase), ANSI C37.32-2002 Table 5 dictates that the phase spacing for the rated maximum voltage shall maintain a 36 inch centerline to centerline phase spacing. Current 4.16 kV bus structures phase spacing is 18 inches, hence, not suitable for any voltage higher than 8.3 kV.

Forecasted budgetary cost to convert all the 4.16 kV distribution circuits to 26.4 kV is approximately $2,900,000 for contracted labor and $3,500,000 for materials.

Stage Two - Design and Construction of the 26.4 kV Sub-Transmission System Loop.

Once completed, the proposed electric grid will be in a standby looped configuration to increase reliability and switching capabilities as per Figure 1. The sub-transmission and distribution systems will only require three substation transformers; A 55 MVA and a 50 MVA at Main Yard Substation and a 60 MVA at Canal Substation. This will greatly reduce maintenance, repairs, electric losses, and number of spare transformers in the event of emergencies.

As part of a looped configuration, each switch yard will have an alternate subtransmission tie. This will facilitate switching due to load accommodations as well as for emergency and disaster recovery. Sub-transmission circuits will be dedicated as such:

a. Transfer all existing sub-transmission circuit load to feeder circuits
b. Strategically place gang-operated switches and reclosers for sectionalizing purposes
c. Budgetary sub-transmission circuit construction is estimated at $750,000

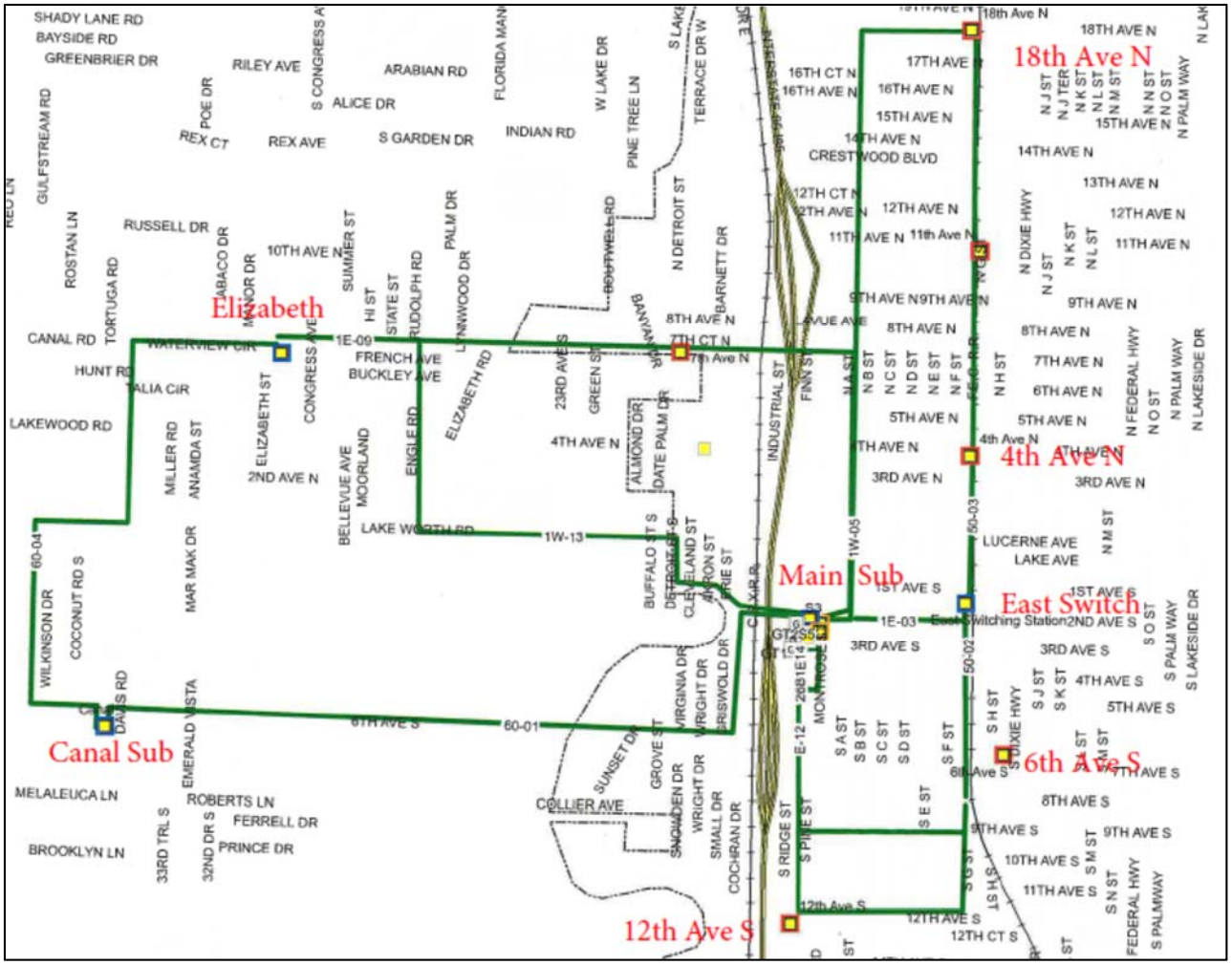

Figure 1 – 26.4 kV Sub-transmission loop

The switch yards will house all breakers within the confines of the switch yard property, eliminating the need for pole-mounted feeder breakers. Below is a breakdown of the per switch yard proposed design.

1. **18th Avenue North Switch Station**

    a. Complete the reinsulating of the 4.16 kV distribution feeders from the 18th and 11th Avenue North Substations to 35 kV standards
        i. Replace current 4.16 kV distribution transformers with 4.16/26.4 kV dual-voltage transformers
    b. Build a new bus structure to accommodate 8 total feeders (Double the existing number of feeders) at 18th Ave North site
    c. Incorporate the following feeders:
        i. Previous 11th Ave North Substation feeders

ii. Existing 26B1801 (College Park load) and 26B1719 (Vernon Heights load) pole mounted reclosers
iii. Additional breaker for North Dixie industrial area load

d. Refer to Figure 2 for proposed equipment and configuration
e. Budgetary switch station construction: $1.81M

2. 6th Avenue South Switch Station

a. Rebuild the 4.16 kV distribution feeders from the 6th Avenue South Substation and existing 4kv House feeders to 35 kV standards
b. Build a new bus structure to accommodate 8 total feeders (Double the existing number of feeders)
c. Incorporate the following feeders:
    i. Four circuits out of the existing 4 kV House
    ii. Existing 26B0603 pole mounted recloser
d. Refer to Figure 2 for proposed equipment and configuration
e. Budgetary switch station construction: $1.81M

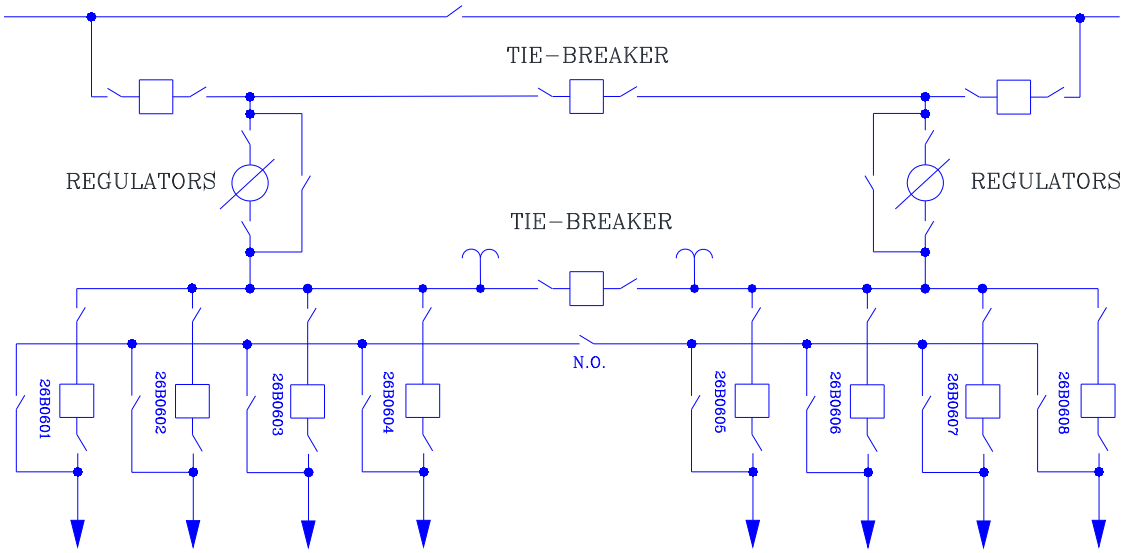

Figure 2 – One-line diagram for 18th Ave N and 6th Ave S switch yards

3. 4th Avenue North Switch Station

a. Rebuild the 4.16 kV distribution feeders from the 4th Avenue North Substation to 35 kV standards
b. Build a new bus structure
c. Incorporate one circuit out of the existing 4 kV House
    i. 3S05 and 3N11 combined as one circuit
d. Refer to Figure 3 for proposed equipment and configuration
e. Budgetary switch station construction: $1.1M

4. 12th Avenue South Switch Station

a. Rebuild the distribution 4.16 kV feeders from the 12th and 15th Avenue South Substations to 35 kV standards
b. Build a new bus structure
c. Combine 15th and 12th Ave South station circuits together at strategic tie points, creating larger circuits
d. Refer to Figure 3 for proposed equipment and configuration
e. Budgetary switch station construction: $1.1M

5. Elizabeth Switch Station

a. Rebuild the distribution 4.16 kV feeders from the 7th Avenue North Substation to 35 kV standards
b. Build a new bus structure and incorporate the following feeders:
    i. Existing 26B0701 circuit
    ii. Existing 0702 and 0704 circuits
    iii. Portion of the 6003 and 6004 circuits (from Canal Substation)
c. Complete 26B6004 subtransmission construction to Elizabeth
d. Refer to Figure 3 for proposed equipment and configuration
e. Budgetary switch station construction: $1.1M

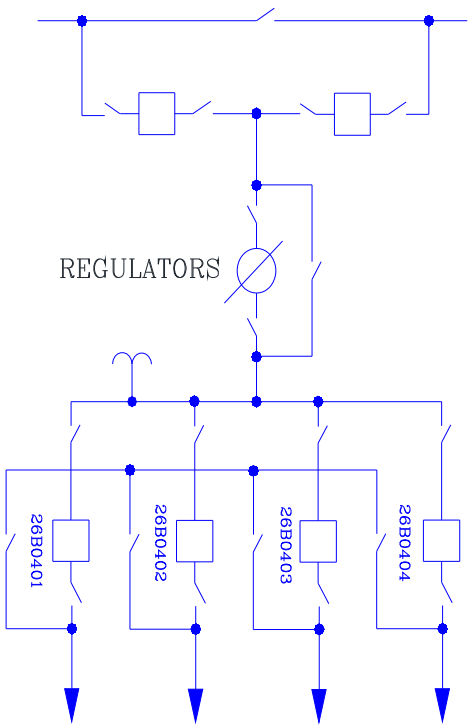

Figure 3 - One-line diagram for 4th Ave N, 12th Ave S, and Elizabeth switch yards

6. Canal Substation

a. Dedicate the 6002 circuit as a 26.4 kV feeder to Palm Beach State College
   i. Eliminate 26.4/4.16 kV transformer (TDJC)
   ii. Reinsulate DR01 circuit to 35kV standards
   iii. Place a 26.4/4.16 kV stepdown transformer on PBSC site to serve existing 4.16 kV load
b. Place additional feeder breaker(s) and additional bus work to break up native load
c. Refer to Figure 4 for proposed equipment and configuration
d. Budgetary switch station construction: $814,000.00

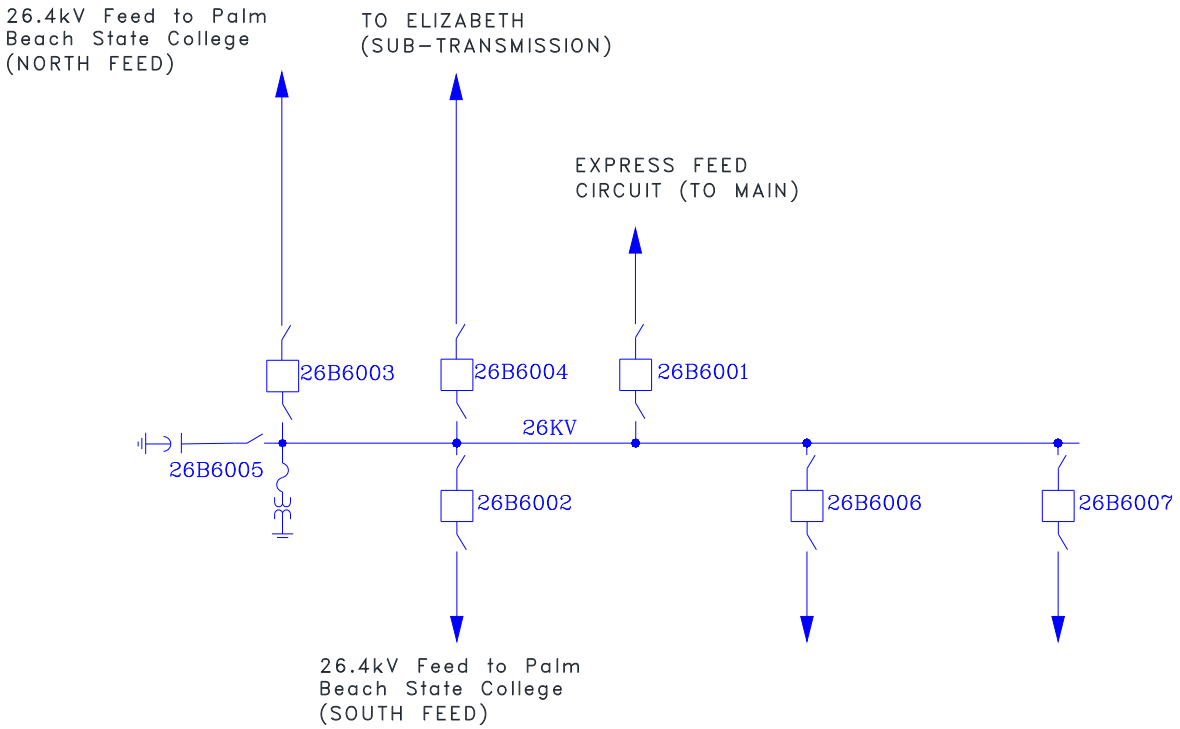

Figure 4 – Canal Substation 26.4 kV distribution and sub-transmission one-line

7. Main Yard Substation

a. Dedicate the W13 circuits as 26.4 distribution
   i. Provide measures to tie to sub-transmission for emergency purposes or tie flexibility
b. E09 circuit will continue to support High School and a subtransmission circuit
c. Eliminate 4 kV house, TPS1, and TPS2 transformers
d. Install a capacitor bank for West Bus and repurpose 26B1W15 breaker as a capacitor bank breaker
e. Repurpose 26B1E14 breaker as a sub-transmission breaker feeding between 6th and 12th Ave South switch stations
f. Refer to Figure 5 for proposed equipment and configuration

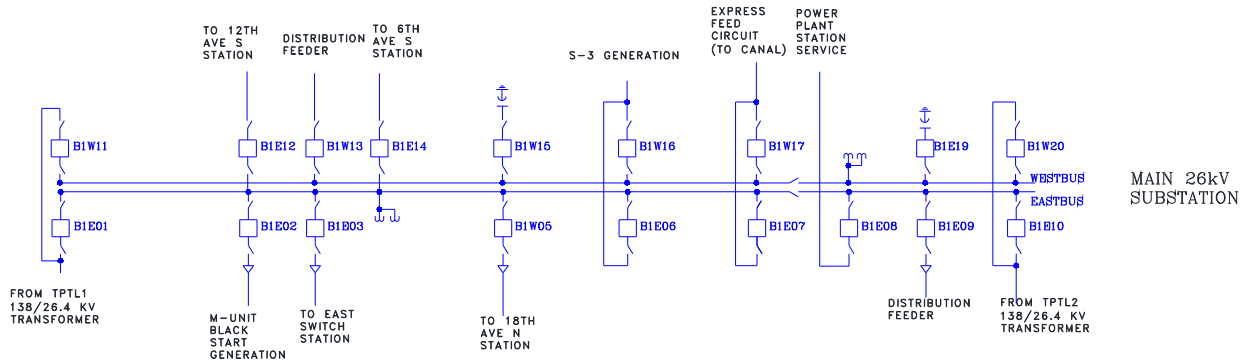

Figure 5 Main Substation 26.4 kV distribution and sub-transmission one-line

Process to accomplish our Goal

The proposal is to start working on the East corridor to convert all the 4.16 kV circuits to 26.4 kV.

The following materials will be required:

- Dual voltage transformers 4.16/26.4 kV of different kVA sizes
- Replace all 3 kV lightning arresters with 21 kV
- Replace all 15 kV switches with 34.5 kV
- Replace all 15 kV cutout with 25 kV
- Replace all 15 kV insulators with 35 kV porcelain insulators

To identify the existing materials that are not rated for 26.4 kV, a crew has been mobilized to accomplish a visual inspection of all 4.16 kV circuits. The following data has been collected:

- 4,900 Poles inspected
- 1,400 Bad poles

Construction Scope

The scope of the construction will be as follows:

- Construct 18th Avenue North and 6th Avenue South switch stations simultaneously
- Construct 4th Avenue North and 12th Avenue South switch stations simultaneously
- Construct Elizabeth switch station and Canal Substation simultaneously

All the circuits that are associated with these switch stations must be reinsulated to 35 kV prior to the completion of switch station construction.

Circuits Conversion Procedure

The procedure will be as follows:

a. Identify and replace all bad poles
b. Replace all the 15 kV insulators with 35 kV porcelain insulators
c. Replace all the 4.16 kV transformers with dual voltage 4.16/26.4 kV transformers
d. Install 3 kV lightning arrester **temporarily** for each transformer
e. Install three-phase 21 kV lightning arresters every thousand (1,000) feet
f. Change out all the cutouts with 25 kV or higher voltage

Switchover from 4.16 kV to 26.4 kV will require one or two service interruptions per customer. There are about 30 circuits to be converted and each circuit has approximately forty (40) bad poles and sixty five (65) transformers.

Safety concerns

- Constructing a system with a uniform distribution voltage will minimize accidental contact with a possible higher voltage.
- Higher voltages require a more stringent vegetation control

Proposed additional system reliability measures

It is recommended to have either an alternate tie with FP&L or expanded on-site generation.

Canal Substation site is suitable for the additional 138 kV tie

- Provide added flexibility and reliability in the event of current tie line disruption
- Budgetary cost to build new transmission line is: $1.6 Million per mile
    - Does not include permitting or right-of-way costs

The Electric Utilities will develop goals, objectives, and plans in several categories to keep the electric system operating effectively long past the stages of construction.