LAKE AVENUE PERSPECTIVE

02/26/16

HISTORIC GULFSTREAM HOTEL SITE DEVELOPMENT SUBMITTAL

JRA architects

C:\Users\tgraves.JRARCHITECTS\Documents\201519- GULFSTREAM HOTEL_CENTRAL_tgraves.rvt

HISTORIC GULFSTREAM HOTEL

1 LAKE AVENUE
LAKE WORTH, FLORIDA 33460

PACKAGE

SITE DEVELOPMENT SUBMITTAL

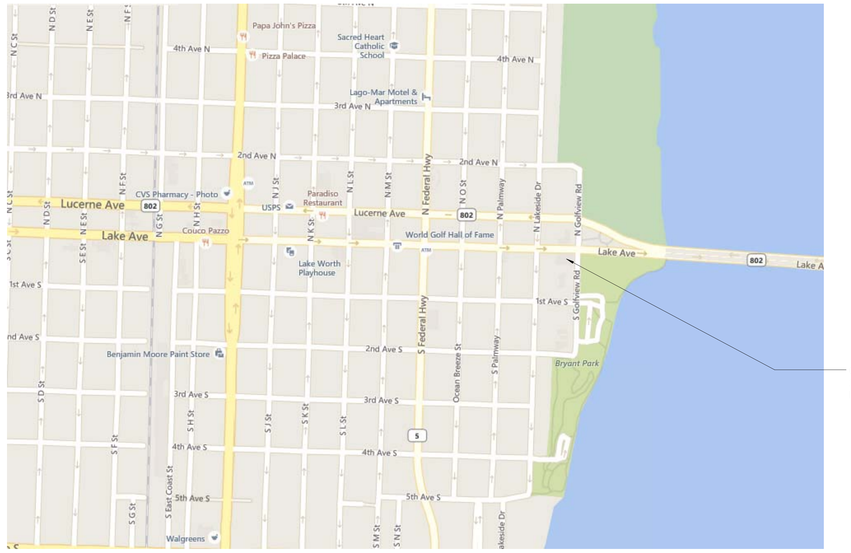

VICINITY MAP

OWNER
HUDSON HOLDINGS
20 SOUTH SWINTON AVENUE
DELRAY BEACH, FLORIDA 33444

PRIME ARCHITECT
JRA ARCHITECTS
829 EAST MARKET STREET, SUITE B
LOUISVILLE, KY 40206
P: 502.583.5467

CONSULTING ARCHITECT
LIVING DESIGNS GROUP
120 NORTH FEDERAL HWY, SUITE 211
LAKE WORTH, FL 33460
P: 561.540.3550

MECHANICAL / ELECTRICAL ENGINEER
KERR-GREULICH ENGINEERS
1534 ORMSBY STATION COURT
LOUISVILLE, KY 40223
P: 502.426.9457

CIVIL ENGINEER
ENVIRODESIGN ASSOCIATES
298 PINEAPPLE GROVE WAY
DELRAY BEACH, FL 33444
P: 561.274.6500

LANDSCAPE ARCHITECT
DON SKOWRON INC.
1415 North M Street
Lake Worth, FL 33460
P: 561.602.6277

DRAWING INDEX

A SITE DEVELOPMENT TECHNICAL DATA
A-1 SITE SURVEY
A-2 CONCEPTUAL SITE DEVELOPMENT PLAN
A-3 CONCEPTUAL SITE DEVELOPMENT PERMEABLE/IMPARMEABLE PAVING PLAN
A-4 PHASE 1- ADDITION AND TEMPORARY PARKING
A-5 PHASE 2- PARKING STRUCTURE AND TEMPORARY PARKING
A-6 NOT USED
A-7 HISTORIC GULFSTEAM HOTEL AND ADDITION FIRST FLOOR PLAN
A-8 HISTORIC GULFSTEAM HOTEL AND ADDITION 2ND THRU 6TH FLOOR PLANS
A-8A EXISTING FLOOR PLANS
A-8B EXISTING FLOOR PLANS
A-8C EXISTING EXTERIOR ELEVATIONS
A-9 HISTORIC GULFSTEAM HOTEL AND ADDITION EXTERIOR ELEVATIONS
A-9A HISTORIC GULFSTREAM HOTEL PERSPECTIVE AND DETAILS
A-10 HISTORIC GULFSTEAM HOTEL AND ADDITION SIGHT LINE STUDY FROM LAKE AVE PLAZA LOOKING NORTH
A-11 HISTORIC GULFSTEAM HOTEL AND ADDITION SIGHT LIGHT STUDY FROM LAKE AVE FACADE' LOOKING WEST
A-12 HISTORIC GULFSTEAM HOTEL AND ADDITION SIGHT LINE STUDY FROM LAKE AVE EAST WING LOOKING NORTH
A-13 GULFSTREAM HOTEL ANNEX FIRST FLOOR PLAN
A-14 GULFSTREAM HOTEL ANNEX SECOND FLOOR PLAN
A-15 GULFSTREAM HOTEL ANNEX THIRD THRU FIFTH FLOOR PLANS
A-16 GULFSTREAM HOTEL ANNEX EAST/WEST ELEVATIONS
A-17 GULFSTREAM HOTEL ANNEX NORTH AND SOUTH ELEVATIONS
A-18 DETAILS
A-19 GULFSTREAM PARKING STRUCTURE FLOOR PLANS
A-20 GULFSTREAM PARKING STRUCTURE EXTERIOR ELEVATIONS
A-21 GULFSTREAM BUILDING SECTIONS
A-22 GULFSTREAM BUILDING SECTION
A-23 HISTORIC GULFSTEAM HOTEL AND ANNEX CONCEPTUAL PERSPECTIVE
A-24 HISTORIC GULFSTEAM HOTEL AND ANNEX CONCEPTUAL PERSPECTIVE
A-25 GULFSTREAM ANNEX AND PARKING GARAGE CONCEPTUAL PERSPECTIVE
A-26 HISTORIC GULFSTREAM HOTEL AND ANNEX TERRACE PERSPECTIVE
A-27 HISTORIC GULFSTEAM HOTEL AND ANNEX TERRACE PERSPECTIVE
A-28 STREETSCAPE ELEVATIONS
A-29 NOT USED
A-30 CONCEPTUAL SITE DEVELOPMENT GROUND FLOOR LIGHTING STUDY
A-31 CONCEPTUAL SITE DEVELOPMENT 2ND FLOOR LIGHTING STUDY
1 OF 6 CIVIL SITE IMPROVEMENTS PLAN
2 OF 6 PAVING & DRAINAGE DETAILS
3 OF 6 PAVING & DRAINAGE DETAILS
4 OF 6 PAVING & DRAINAGE DETAILS
5 OF 6 WATER & WASTEWATER DETAILS
6 OF 6 POLUTION PREVENTION PLAN
L-1 LANDSCAPE PLAN
L-2 TREE RELOCATION PLAN
L-3 PLANTING SPECIFICATIONS AND DETAILS

REVISED WITH CITY OF LAKE WORTH REVIEW COMMENTS

JRA architects
829 E Market Street, Suite B
Louisville, Kentucky 40206
502.583.4697

STATE OF FLORIDA
MARK E. THIER
AR97544
REGISTERED ARCHITECT

SITE DEVELOPMENT SUBMITTAL

HISTORIC GULFSTREAM HOTEL
HUDSON HOLDINGS, LLC
LAKE WORTH, FL

PROJECT	2015-19
DATE	2/17/2016
DRAWN	TLG-AJT
CHECKED	MET

REVISIONS

No.	Description	Date
1	CITY COMMENTS	1/18/16
2	SIGNAGE	1/19/16
3	Additional Comments	1/28/16
4	FINAL REVIEW	2/4/16
5	Revised Design	2/26/16

JRA ARCHITECTS HAS RETAINED AN ELECTRONIC VERSION OF THESE DRAWINGS. THE CLIENT AGREES NOT TO REUSE THESE DRAWINGS - IN ELECTRONIC OR ANY OTHER FORMAT - IN WHOLE, OR IN PART, FOR ANY PURPOSE OTHER THAN FOR THE PROJECT. THE CLIENT AGREES NOT TO GIVE THESE FILES TO ANYONE OR OTHERS WITHOUT THE PRIOR WRITTEN CONSENT OF THE ARCHITECT. THE CLIENT FURTHER AGREES TO WAIVE ALL CLAIMS AGAINST THE ARCHITECT RESULTING IN ANY WAY FROM ANY UNAUTHORIZED CHANGES TO OR REUSE OF THE ELECTRONIC FILES FOR ANY OTHER PROJECT BY ANYONE OTHER THAN THE ARCHITECT.

COVER SHEET

A-1a

COPYRIGHT 2016 - JRA, INC.

2/26/2016 11:51:41 AM

C:\Users\tgraviss.JRARCHITECTS\Documents\201519- GULFSTREAM HOTEL_CENTRAL_tgraviss.rvt

ARCHITECTURAL STYLE CLASSIFCATION

Spanish Mission Revival Architecture

Spanish Mission Architecture (1600-1850)

Origins:
Spanish Mission architecture is most typically found in areas of the United States originally explored and settled by the Spanish just prior to the seventeenth century and lasting until approximately 1850. The style and type derive from a combination of the baroque style, popular in native Spain, and the local materials and labor available to frontier missions. The existing Baroque style popular in Spain at the time was derived from the Baroque style popular in Italy, which was heavily linked to the Counter-Reformation and the supremacy of the Catholic Church. The style drew heavily on existing Roman forms and symmetries.

Features & Construction:
In the west the style was heavily influenced by native building techniques, which resulted in rather primitive buildings. The resulting style was typically a massive adobe structure, with thick walls, flat roofs with parapets, and timber supports on unadorned brackets. A lack of suitable building materials often meant the walls were constructed of mud-brick, which had a low weight bearing capacity and would eventually dissolve. To protect the structure exterior walls were typically covered in a layer of stucco.

More sophisticated examples employed a stronger Roman influence, typical of contemporary Spanish architecture. Exterior walls were often often flanked on the outside by long arcaded corridors, which provided shade and also served to keep moisture away from the adobe walls.

Roofs were originally thatched, but later covered with a half-round clay tile to better protect the structure from moisture. Very often these roofs were enormously heavy, constructed of the same materials as the walls and supported by massive beams, which were constructed with the limited wood often available. When roofs were not completely flat with a surrounding parapet they were often a shallow gable, facing the front of the building.

Windows were basic openings with little decoration and were often the only break in an otherwise completely flat and uniformly stuccoed wall.

Transition:
The secularization of the original mission lands controlled by the Spanish resulted in continued Spanish architectural influence, which eventually dissipated, only to be revived in the 1890s, primarily in California, Florida, and the Southwest.

Spanish Mission/Eclectic Revival Architecture (1890-1940)

Origins:
The dawn of the twentieth century saw historical styles being used as a way of connecting with the past and reinforcing regional identities. This was particularly true in California and Florida, where Spain had created the first settlements. Addison Mizner, moving to Florida in 1918after time in New York, began importing the Spanish Baroque style he had studied at the University of Salamanca. His first large scale project was the Palm Beach Everglades Club. Soon wealthy easterners were approaching him to design Florida vacation homes for them. His work rode the real estate boom of the 1920s until the hurricane in 1926.

Mizner's work inspired many other buildings in the same style, which being located primarily in California and Florida (areas of previous Spanish settlement), came to have a powerful association with resort architecture, which evoked a relaxed, vacation-like lifestyle.

Features:
Spanish Mission Revival architecture features many of the original elements of the Spanish Mission style, using Spanish Baroque features and forms. Typically exteriors walls are smooth stucco, giving them the smooth appearance of the original adobe constructed missions. Dormers and parapets are mission shaped and may or may not be coped.

Roofs are typically a shallow gable or flat, with a parapet. Roofing materials are typically red clay half-round tiles. Eaves are frequently open and extend well beyond the plane of the wall. Windows often appear as a tri-part classical arrangement of a basic rectangular casement. Windows are often double-hung.

Arcades are frequently located along the street level of exterior walls. These arcades are often covered in the same smooth stucco as the rest of the building. Any ornamentation is typically of concrete or plaster with limited use of metal and wood. Arches are typically Roman in origin, rather than medieval or Moorish.

Transition:
The Spanish Mission/Eclectic Revival reached its zenith in the 1930s and quickly descended in popularity during the 1940s.

Notable Spanish Mission/Eclectic Revival Buildings

Mar-a-Lago (1923-27)

El Mirasol (1920s)

Everglades Club (1918)

Casa Bendita (1921)

La Jolla Women's Club (1912-1913)

Burlingame Train Station (1894)

San Gabriel Civic Auditorium (1927)

Santa Barbara County Courthouse (1929)

The Gulf Stream Hotel - Lake Worth

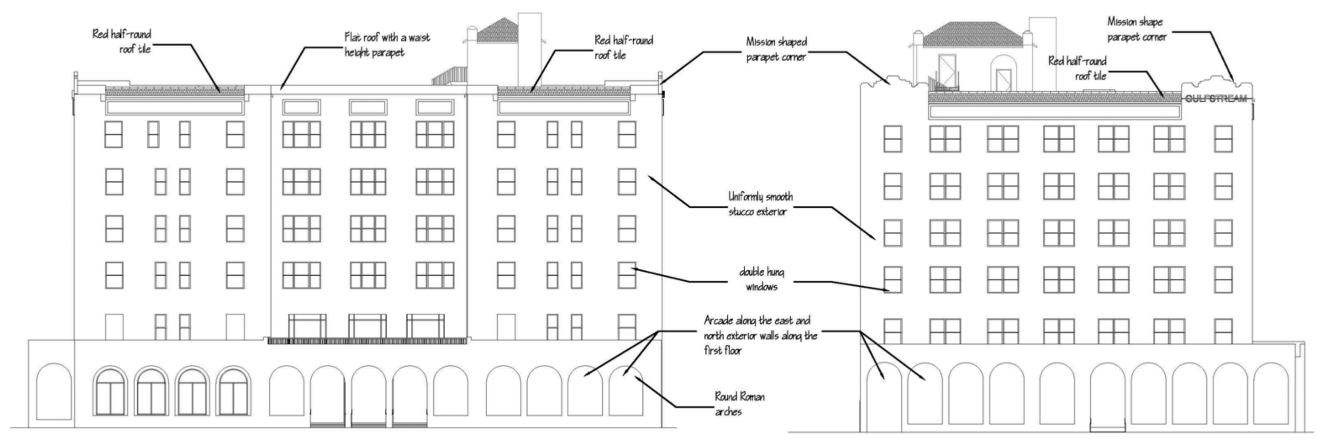

North Elevation

East Elevation

The Gulf Stream Hotel (El Nuevo Hotel)

The Gulf Stream Hotel in Lake Worth is an excellent example of commercial Spanish Revival architecture in Lake Worth, Florida. While fairly simple in most details, the areas of the building that do show ornamentation are clearly Spanish Revival. During the period of construction Spanish Revival was a popular style in the Lake Worth area. At the same time the style was being strongly associated with resort architecture. The following is taken from the building's description in the National Register Nomination and the newspaper announcement, also found in the National Register Nomination (emphasis added):

"All decorative features above the porches appear at the parapet. Multiple ogee curves define the profile of the parapets at each of the four main corners of the roof. Centered beneath each raised parapet is a stucco shield in high relief, inscribed with the Gulf Stream Hotel monogram. Between the decorated corner elements, the parapets are capped with clay barrel tile ***(Mission style)*** *pent roofs. Directly beneath the pents are long rectangular frieze panels. Formerly, these panels contained polychromed stucco friezes in relief, depicting geometric and floral patterns. These friezes have been covered with subsequent stucco work."*

AS FIRST ANNOUNCED, Lake Worth Herald, March 21, 1923, p. 1:

"Land has been purchased, architectural plans approved and contract let for a $250,000 five-story fire-proof hotel of 100 rooms to be erected ... by the El Nuevo Hotel Company.

*"****The architecture of the building is to be Spanish type****, with a roof garden, and the dining room will be located on the top floor. The lot upon which the building will be located is 100 by 135 feet, and the hotel will be built to face on Lake Avenue and R Street, overlooking the park and the lake.*

"The location selected for the hotel is conceded to be one of the best sites in Lake Worth."

Proposed Building Lot Coverage Area Breakdown

	Floor Area (Building Lot Coverage)
GS Historic	
HB ground floor:	14,195
HB mezanine:	Not included in lot coverage area
HB second floor:	Not included in lot coverage area
HB third floor:	Not included in lot coverage area
HB fourth floor:	Not included in lot coverage area
HB fifth floor:	Not included in lot coverage area
HB sixth floor:	Not included in lot coverage area
Area Total	14,195
GS Addition	
AS ground floor:	6,775
Area Total	6,775
GS Annex	
A. GA ground floor:	17,610
A. GA second floor:	Not included in lot coverage area
A. GA third floor:	Not included in lot coverage area
A. GA fourth floor:	Not included in lot coverage area
A. GA fifth floor:	Not included in lot coverage area
Area Total	17,610
GS Garage	
PG ground floor:	Not included in lot coverage area
PG second floor:	Not included in lot coverage area
PG third floor	Not included in lot coverage area
PG roof parking:	Not included in lot coverage area
Area Total	-
Total Building Lot coverage	38,580
Max allowed building lot coverage = 47,582 S.F.	

Required Parking			
	Unit	**Formula**	**Required Spaces**
Historic Gulfstream Hotel			83 spaces (Vested Per Approved Site Plan and Existing On-Street Parking)
Gulfstream Hotel Annex			
Rooms	87 Rooms	.75 spaces per room	66 spaces
Office	453 SF	1 space per 400 SF	1 space
Assemby	2,061 SF	1 space per 250 SF	8 spaces
Parking Garage			
Retail	1,500	1 space per 500 SF	3 spaces
		TOTAL REQUIRED	**161**

* Pursuant to Section 23.4-10(I), when units or measurements determining the number of required off-street parking spaces has resulted in the requirement of a fractional space, any such fraction of one-fourth (¼) or greater has provided a full space

Provided Parking	
Parking Structure	
Ground Floor	40
2nd Floor	50
3rd Floor	50
Rooftop	54
TOTAL GARAGE PARKING	194
On-Street Parking	
Lake Avenue	6
South Lakeside Drive	13
1st Avenue South	4
South Golfview Road	3
TOTAL ON-STREET PARKING	**26**
TOTAL PARKING PROVIDED	**220**

Site Development Impermeable Surface Area	Gross Area	Impermeable Surface Area	Unit of Measure	Notes:
Maximum Impermeable surface area = 80%	79,304	63,443	S.F.	
Total Site Area	79,304			
Historic GS Hotel	14,195	14,195	S.F.	Includes only Lake Ave covered porch areas.
Addition	6,775	6,775	S.F.	Includes South Golfview Road covered porch area
GS Annex	18,175	18,175	S.F.	Includes Lake Ave covered porch area
GS Parking Garage	14,900	14,900	S.F.	
Concrete Paved Area	4,220	4,220	S.F.	
Permeable Paver Area (Area Div x 2 = Total)	9,397	4,699	S.F.	
Landscape Area	11,642			Landscape area not included in area calculations
Impermeable Paving Area - Total	**79,304**	**62,964**	**S.F.**	

Gulfstream Hotel Project Space Program

City of Lake Worth DT - Downtown, Zoning Regulations Site Development Parameters Table
Sec. 23.3-14 (d)

		Required	Proposed
Minimum Lot Area		6,500 square feet	79,304 S.F.
Minimum Lot Width		25 ft. on Lake Avenue and Lucerne Avenue	280.00' on Lake Avenue
		50 ft. in general	135' on 1st Ave South
Maximum Height	Primary	30 ft. (not to exceed 2 stories) *Additional 35 ft. of height under Sustainable Bonus Incentive Program (not to exceed 6 stories) east of Federal Highway with the provision of a hotel or mixed use hotel project of at least 50 rooms, requires conditional land use.	Existing Structure: 78'-8" to top of parapet Proposed Structure: 65' to top of parapet
	Accessory	24 ft. (not to exceed 2 stories)	N/A
Setback (Historic Gulfstream Hotel Building)	Front (North)	17 ft. maximum on Lake Avenue	Existing Structure: 0 feet
	Rear (South)	10% of lot depth next to residential zoning - 175' lot depth - 17.5 ft.	Prop. Addition: 18 feet
	Side (West)	0 ft. on interior lot	Existing Structure: 0 feet
	Side (East)	10 ft. on street	Existing Structure: 0 feet Prop. Addition: 1 foot (Waiver Requested)
		Roof overhangs shall not exceed more than 2 feet.	Existing Structure
	Bonus Height and Stories	A. Front Façade: 8 to 12 feet in addition to minimum setback for 3rd flr &	Existing: 12' +/- at 2nd floor
		B. Rear Façade: 8 to 12 feet in addition to minimum setback for 3rd flr &	Existing: 73' +/- at 2nd floor
		C. Façades Facing Major Thoroughfares: 8 to 12 feet in addition to minimum setback for 3rd flr & up	Existing: 12' +/- at 2nd floor
Setback (Hotel Annex and Parking Garage)	Front (North)	17 ft. maximum on Lake Avenue	17' feet
	Front (South)	10 ft. minimum not to exceed 22 ft	22 feet
	Side (West)	10 ft. on street and 0 ft. on interior lot.	10 feet
	Side (East)	10 ft. on street and 0 ft. on interior lot.	10 feet
		Roof overhangs shall not exceed more than 2 feet.	Will Comply
	Bonus Height and Stories	A. Front Façade: 8 to 12 feet in addition to minimum setback for 3rd flr &	18 feet to 34 feet
		B. Rear Façade: 8 to 12 feet in addition to minimum setback for 3rd flr &	N/A
		C. Façades Facing Major Thoroughfares: 8 to 12 feet in addition to minimum setback for 3rd flr & up	18 feet to 34 feet
Living Area		N/A	N/A
Accessory Structure Limitations		The total area for accessory structures is limited to 40% of the principal structure area or 1,000 square feet, whichever is less	N/A
Max. Impermeable Surface		C. Large lot - 80% - 63,443 SF	
Max. Building Lot Coverage		C. Large lot - 60% - 47,582 SF	38,580 SF
Max. Wall Height at Side Setback		65'-0" for additional stories with sustainable incentive for hotel.	65'-0"
Floor Area Ratio (FAR) Limitation		Large Lot 1.10 with additional 0.5 under the Sustainable Bonus Incentive Program and an additional 0.50 for hotel project east of Federal Highway; TOTAL FAR 2.1 - 166,538 SF	1.85 (146,557 SF)

Floor Area Analysis

Maximum Floor Area Ratio Permitted

	FAR Area	**Comments**
GS Historic		
HB ground floor:	13,150	FAR Area does not include covered porch areas.
HB mezanine:	3,500	
HB second floor:	9,225	
HB third floor:	9,525	
HB fourth floor:	9,525	
HB fifth floor:	9,525	
HB sixth floor:	9,525	
Area Total	63,975	
GS Addition		
AS ground floor:	6,775	FAR Area does not include covered porch areas.
Area Total	6,775	
GS Annex		
A. GA ground floor:	16,290	FAR Area does not include covered porch areas.
A. GA second floor:	14,272	
A. GA third floor:	14,800	
A. GA fourth floor:	14,800	
A. GA fifth floor:	14,800	
Area Total	74,962	
GS Garage		Based upon speed ramp parking garage design. Note that only the Retail area is required to be calculated. No retail included in Garage
PG ground floor:		
PG second floor:		
PG 3rd floor:		
PG roof parking:		
Area Total	-	
FAR Building Number	145,712	Max allowable S.F. = 166,538 S.F.

EXTERIOR BUILDING SIGNAGE

GS HISTORIC HOTEL	= 73.5 S.F.
GS ANNEX	= 44 S.F.
GS GARAGE	= 32 S.F.
TOTAL SIGNAGE AREA	= 149.5 S.F.

JRA architects
829 E Market Street, Suite B
Louisville, Kentucky 40206
502.583.4697

STATE OF FLORIDA MARK E. TRIER AR97544 REGISTERED ARCHITECT

SITE DEVELOPMENT SUBMITTAL

HISTORIC GULFSTREAM HOTEL

HUDSON HOLDINGS, LLC
LAKE WORTH, FL

ARCHITECTURAL

PROJECT	2015-19
DATE	2/17/2016
DRAWN	TLG
CHECKED	MET

REVISIONS

No.	Description	Date
1	CITY COMMENTS	1/18/16
2	SIGNAGE	1/19/16
3	Additional Comments	1/28/16
4	FINAL REVIEW	2/4/16
5	Revised Design	2/26/16

JRA ARCHITECTS HAS RETAINED AN ELECTRONIC VERSION OF THESE DRAWINGS. THE CLIENT AGREES NOT TO REUSE THESE DRAWINGS - IN ELECTRONIC OR ANY OTHER FORMAT - IN WHOLE, OR IN PART, FOR ANY PURPOSE OTHER THAN FOR THE PROJECT. THE CLIENT AGREES NOT TO TRANSFER THESE ELECTRONIC FILES TO OTHERS WITHOUT THE PRIOR WRITTEN CONSENT OF THE ARCHITECT. THE CLIENT FURTHER AGREES TO WAIVE ALL CLAIMS AGAINST THE ARCHITECT RESULTING IN ANY WAY FROM ANY UNAUTHORIZED CHANGES TO OR REUSE OF THE ELECTRONIC FILES FOR ANY OTHER PROJECT BY ANYONE OTHER THAN THE ARCHITECT.

SITE DEVELOPMENT TECHNICAL DATA

A

COPYRIGHT 2016 - JRA, INC.

2/28/2016 10:44:17 AM

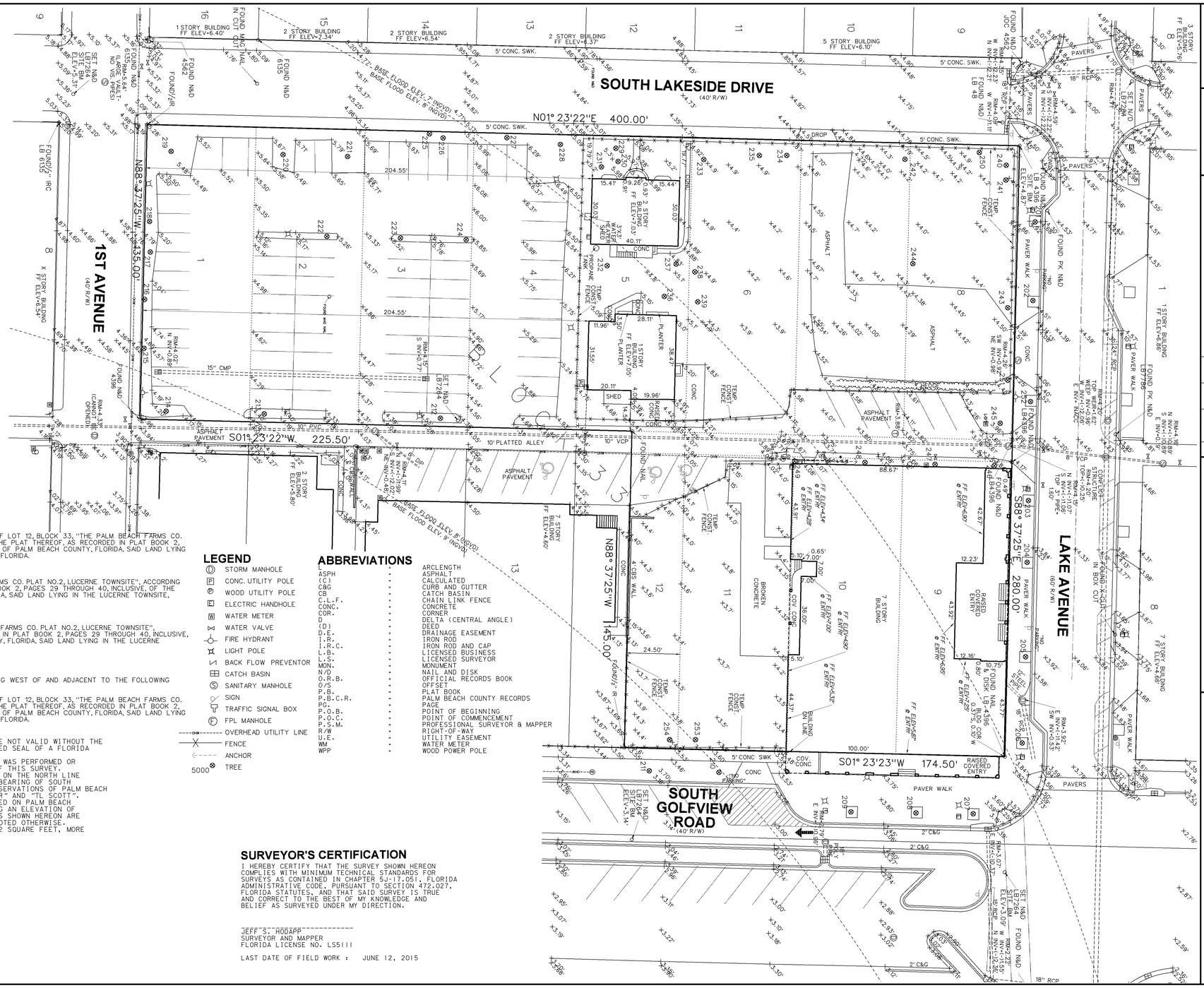

TREE LIST

201	15"	ROYAL PALM
202	15"	ROYAL PALM
203	12"	ROYAL PALM
204	15"	ROYAL PALM
205	15"	ROYAL PALM
206	15"	ROYAL PALM
207	15"	ROYAL PALM
208	8"	ROYAL PALM
209	18"	ROYAL PALM
210	15"	ROYAL PALM
211	15"	ROYAL PALM
212	6"	OAK
213	6"	OAK
214	6"	OAK
215	6"	OAK
216	8"	OAK
217	9"	OAK
218	15"	CABBAGE PALM
219	84"	STRANGLER FIG
220	60"	STRANGLER FIG
221	60"	STRANGLER FIG
222	8"	OAK
223	8"	OAK
224	8"	OAK
225	12"	CABBAGE PALM
226	8"	OAK
227	18"	OAK
228	24"	MANGO
229	10"	QUEEN PALM
230	10"	QUEEN PALM
231	8"	QUEEN PALM
232	10"	OAK
233	20"	ROYAL PALM
234	10"	QUEEN PALM
235	10"	QUEEN PALM
236	15"	OAK
237	15"	OAK
238	6"	QUEEN PALM
239	8"	ROYAL PALM
240	6"	QUEEN PALM
241	6"	QUEEN PALM
242	10"	QUEEN PALM
243	12"	CABBAGE PALM
244	8"	ROYAL PALM
245	24"	ROYAL PALM
246	(2)4"	PALMS
247	(2)4"	PALMS
248	(2)4"	PALMS
249	(2)4"	PALMS
250	8"	QUEEN PALM
251	8"	QUEEN PALM
252	12"	ROYAL PALM
253	15"	ROYAL PALM
254	15"	ROYAL PALM

LEGAL DESCRIPTION

PARCEL 1

LOTS 9, 10, 11 AND THE NORTHERLY 24.50 FEET OF LOT 12, BLOCK 33, "THE PALM BEACH FARMS CO. PLAT NO.2, LUCERNE TOWNSITE", ACCORDING TO THE PLAT THEREOF, AS RECORDED IN PLAT BOOK 2, PAGES 29 THROUGH 40, OF THE PUBLIC RECORDS OF PALM BEACH COUNTY, FLORIDA, SAID LAND LYING IN THE LUCERNE TOWNSITE, PALM BEACH COUNTY, FLORIDA.

AND

LOTS 7 AND 8, BLOCK 33, "THE PALM BEACH FARMS CO. PLAT NO.2, LUCERNE TOWNSITE", ACCORDING TO THE PLAT THEREOF, AS RECORDED IN PLAT BOOK 2, PAGES 29 THROUGH 40, INCLUSIVE, OF THE PUBLIC RECORDS OF PALM BEACH COUNTY, FLORIDA, SAID LAND LYING IN THE LUCERNE TOWNSITE, PALM BEACH COUNTY, FLORIDA.

AND

LOTS 1 THROUGH 6, BLOCK 33, "THE PALM BEACH FARMS CO. PLAT NO.2, LUCERNE TOWNSITE", ACCORDING TO THE PLAT THEREOF, AS RECORDED IN PLAT BOOK 2, PAGES 29 THROUGH 40, INCLUSIVE, OF THE PUBLIC RECORDS OF PALM BEACH COUNTY, FLORIDA, SAID LAND LYING IN THE LUCERNE TOWNSITE, PALM BEACH COUNTY, FLORIDA.

AND

PARCEL 2

THAT CERTAIN 10 FOOT WIDE STRIP OF LAND LYING WEST OF AND ADJACENT TO THE FOLLOWING DESCRIBED PARCEL:

LOTS 9, 10, 11 AND THE NORTHERLY 24.50 FEET OF LOT 12, BLOCK 33, "THE PALM BEACH FARMS CO. PLAT NO.2, LUCERNE TOWNSITE", ACCORDING TO THE PLAT THEREOF, AS RECORDED IN PLAT BOOK 2, PAGES 29 THROUGH 40, OF THE PUBLIC RECORDS OF PALM BEACH COUNTY, FLORIDA, SAID LAND LYING IN THE LUCERNE TOWNSITE, PALM BEACH COUNTY, FLORIDA.

NOTES

1. REPRODUCTIONS OF THIS SKETCH ARE NOT VALID WITHOUT THE SIGNATURE AND THE ORIGINAL RAISED SEAL OF A FLORIDA LICENSED SURVEYOR AND MAPPER.
2. NO SEARCH OF THE PUBLIC RECORDS WAS PERFORMED OR REFERENCED IN THE PREPARATION OF THIS SURVEY.
3. BEARINGS SHOWN HEREON ARE BASED ON THE NORTH LINE OF SAID BLOCK 33 HAVING A GRID BEARING OF SOUTH 88°37'25" EAST, ACCORDING TO OBSERVATIONS OF PALM BEACH COUNTY CONTROL MONUMENTS "GROVER" AND "TL SCOTT".
4. ELEVATIONS SHOWN HEREON ARE BASED ON PALM BEACH COUNTY BENCHMARK "K 402", HAVING AN ELEVATION OF 15.699 NAVD 1988. ALL ELEVATIONS SHOWN HEREON ARE RELATIVE TO NAVD 1988, UNLESS NOTED OTHERWISE.
5. SURVEYED PROPERTY CONTAINS 79302 SQUARE FEET, MORE OR LESS.

FLOOD INFORMATION

COMMUNITY NUMBER	:	120213
PANEL NUMBER	:	0002C
DATE OF FIRM	:	9-30-1982
ZONE	:	A7
BASE FLOOD ELEV	:	7',8',9'

LEGEND

- STORM MANHOLE
- CONC. UTILITY POLE
- WOOD UTILITY POLE
- ELECTRIC HANDHOLE
- WATER METER
- WATER VALVE
- FIRE HYDRANT
- LIGHT POLE
- BACK FLOW PREVENTOR
- CATCH BASIN
- SANITARY MANHOLE
- SIGN
- TRAFFIC SIGNAL BOX
- FPL MANHOLE
- OVERHEAD UTILITY LINE
- FENCE
- ANCHOR
- 5000 TREE

ABBREVIATIONS

L	-	ARCLENGTH
ASPH	-	ASPHALT
(C)	-	CALCULATED
C&G	-	CURB AND GUTTER
CB	-	CATCH BASIN
C.L.F.	-	CHAIN LINK FENCE
CONC.	-	CONCRETE
COR.	-	CORNER
D	-	DELTA (CENTRAL ANGLE)
(D)	-	DEED
D.E.	-	DRAINAGE EASEMENT
I.R.	-	IRON ROD
I.R.C.	-	IRON ROD AND CAP
L.B.	-	LICENSED BUSINESS
L.S.	-	LICENSED SURVEYOR
MON.	-	MONUMENT
N/D	-	NAIL AND DISK
O.R.B.	-	OFFICIAL RECORDS BOOK
O/S	-	OFFSET
P.B.	-	PLAT BOOK
P.B.C.R.	-	PALM BEACH COUNTY RECORDS
PG.	-	PAGE
P.O.B.	-	POINT OF BEGINNING
P.O.C.	-	POINT OF COMMENCEMENT
P.S.M.	-	PROFESSIONAL SURVEYOR & MAPPER
R/W	-	RIGHT-OF-WAY
U.E.	-	UTILITY EASEMENT
WM	-	WATER METER
WPP	-	WOOD POWER POLE

SURVEYOR'S CERTIFICATION

I HEREBY CERTIFY THAT THE SURVEY SHOWN HEREON COMPLIES WITH MINIMUM TECHNICAL STANDARDS FOR SURVEYS AS CONTAINED IN CHAPTER 5J-17.051, FLORIDA ADMINISTRATIVE CODE, PURSUANT TO SECTION 472.027, FLORIDA STATUTES, AND THAT SAID SURVEY IS TRUE AND CORRECT TO THE BEST OF MY KNOWLEDGE AND BELIEF AS SURVEYED UNDER MY DIRECTION.

JEFF S. HODAPP
SURVEYOR AND MAPPER
FLORIDA LICENSE NO. LS5111

LAST DATE OF FIELD WORK : JUNE 12, 2015

JOB NO.	15132
SCALE	1"=20'
FB/PG	/1
DRAWN	JSH
CHECKED	JEK
SHEET	1 OF 1

SEAL

REVISIONS: FB/PG

NO.	DATE	BY	CK'D
1			
2			
3			
4			
5			
6			

GULFSTREAM HOTEL
BOUNDARY AND TOPOGRAPHIC SURVEY

PERIMETER SURVEYING & MAPPING
947 Clint Moore Road
Boca Raton, Florida 33487
Tel: (561) 241-9988
Fax: (561) 241-5182
Certificate of Authorization No. LB7264

JRA architects
829 E Market Street, Suite B
Louisville, Kentucky 40206
502.583.4697

STATE OF FLORIDA
MARK E. THIER
AR97544
REGISTERED ARCHITECT

SITE DEVELOPMENT SUBMITTAL

HISTORIC GULFSTREAM HOTEL
SITE DEVELOPMENT SUBMITTAL
HUDSON HOLDINGS, LLC
LAKE WORTH, FL

ARCHITECTURAL

PROJECT	2015-19
DATE	12/07/2015
DRAWN	-
CHECKED	-

REVISIONS

No.	Description	Date
1	CITY COMMENTS	1/18/16

JRA ARCHITECTS HAS RETAINED AN ELECTRONIC VERSION OF THESE DRAWINGS. THE CLIENT AGREES NOT TO REUSE THESE DRAWINGS - IN ELECTRONIC OR ANY OTHER FORMAT - IN WHOLE, OR IN PART, FOR ANY PURPOSE OTHER THAN FOR THE PROJECT. THE CLIENT AGREES NOT TO GIVE OR LOAN THESE DRAWINGS TO OTHERS WITHOUT THE PRIOR WRITTEN CONSENT OF THE ARCHITECT. THE CLIENT FURTHER AGREES TO WAIVE ALL CLAIMS AGAINST THE ARCHITECT RESULTING IN ANY WAY FROM ANY CHANGES OR ADDITIONS TO OR REUSE OF THE ELECTRONIC FILE FOR ANY OTHER PROJECT BY ANYONE OTHER THAN THE ARCHITECT.

SITE SURVEY

A-1

COPYRIGHT 2016 - JRA, INC.

C:\Users\jgraves.JRARCHITECTS\Documents\2015\15-GULFSTREAM HOTEL_CENTRAL_jgraves.rvt
2/5/2016 9:53:20 AM

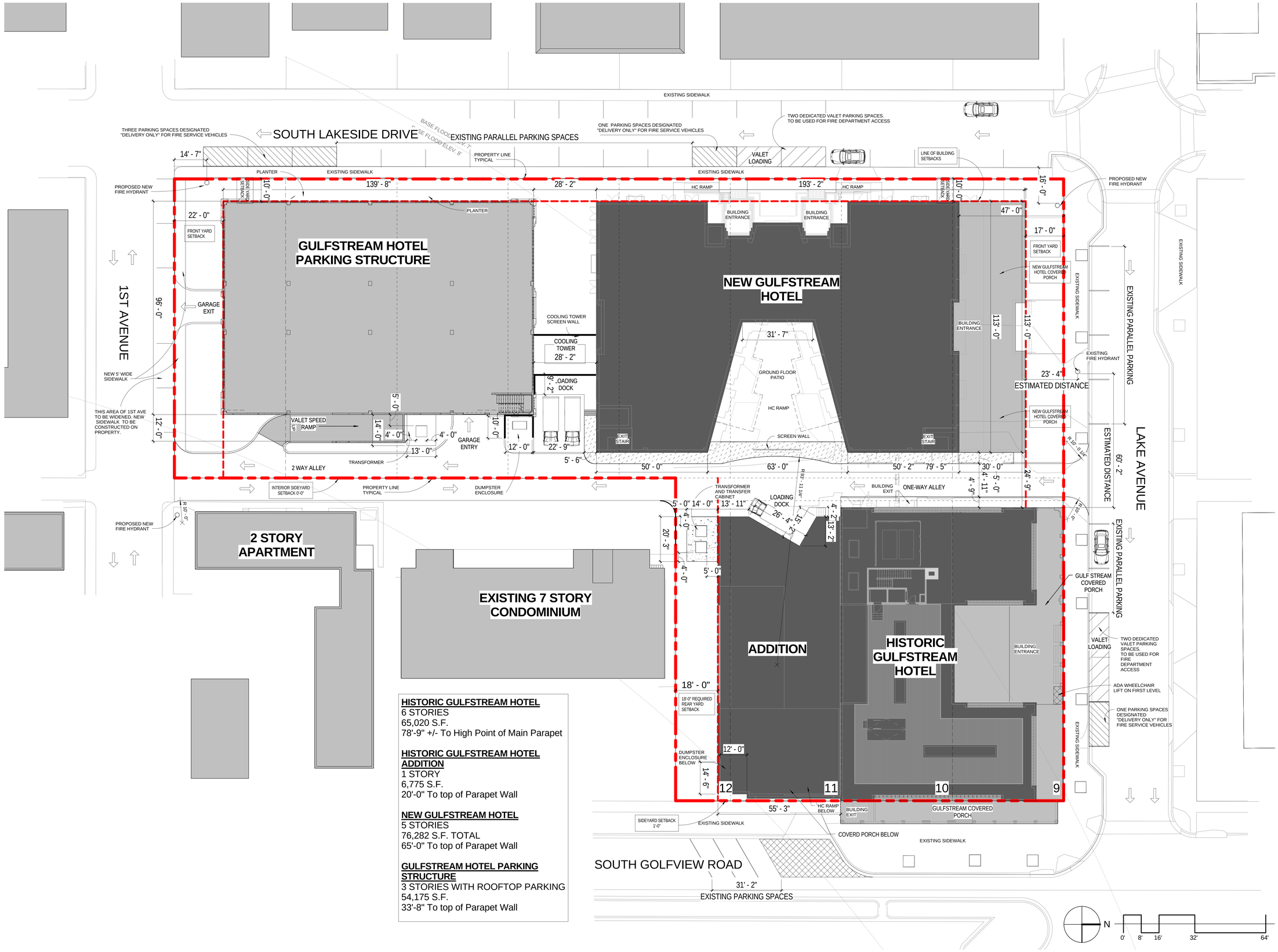

HISTORIC GULFSTREAM HOTEL
6 STORIES
65,020 S.F.
78'-9" +/- To High Point of Main Parapet

HISTORIC GULFSTREAM HOTEL ADDITION
1 STORY
6,775 S.F.
20'-0" To top of Parapet Wall

NEW GULFSTREAM HOTEL
5 STORIES
76,282 S.F. TOTAL
65'-0" To top of Parapet Wall

GULFSTREAM HOTEL PARKING STRUCTURE
3 STORIES WITH ROOFTOP PARKING
54,175 S.F.
33'-8" To top of Parapet Wall

CONCEPTUAL SITE DEVELOPMENT PLAN

JRA architects
829 E Market Street, Suite B
Louisville, Kentucky 40206
502.583.4697

STATE OF FLORIDA MARK E. TRIER AR97544 REGISTERED ARCHITECT

SITE DEVELOPMENT SUBMITTAL

HISTORIC GULFSTREAM HOTEL

HUDSON HOLDINGS, LLC
LAKE WORTH, FL

ARCHITECTURAL

PROJECT	2015-19
DATE	2/17/2016
DRAWN	TLG-AJT
CHECKED	MET

REVISIONS

No.	Description	Date
1	CITY COMMENTS	1/18/16
2	SIGNAGE	1/19/16
3	Additional Comments	1/28/16
4	FINAL REVIEW	2/4/16

JRA ARCHITECTS HAS RETAINED AN ELECTRONIC VERSION OF THESE DRAWINGS. THE CLIENT AGREES NOT TO REUSE THESE DRAWINGS - IN ELECTRONIC OR ANY OTHER FORMAT - IN WHOLE, OR IN PART, FOR ANY PURPOSE OTHER THAN FOR THE PROJECT. THE CLIENT AGREES NOT TO TRANSFER THESE ELECTRONIC FILES TO OTHERS WITHOUT THE PRIOR WRITTEN CONSENT OF THE ARCHITECT. THE CLIENT FURTHER AGREES TO WAIVE ALL CLAIMS AGAINST THE ARCHITECT RESULTING IN ANY WAY FROM ANY UNAUTHORIZED CHANGES TO OR REUSE OF THE ELECTRONIC FILES FOR ANY OTHER PROJECT BY ANYONE OTHER THAN THE ARCHITECT.

CONCEPTUAL SITE DEVELOPMENT PLAN

A-2

COPYRIGHT 2016 - JRA, INC.

C:\Users\tgravss.JRARCHITECTS\Documents\2015\19- GULFSTREAM HOTEL_CENTRAL_tgravss.rvt
2/28/2016 10:45:17 AM

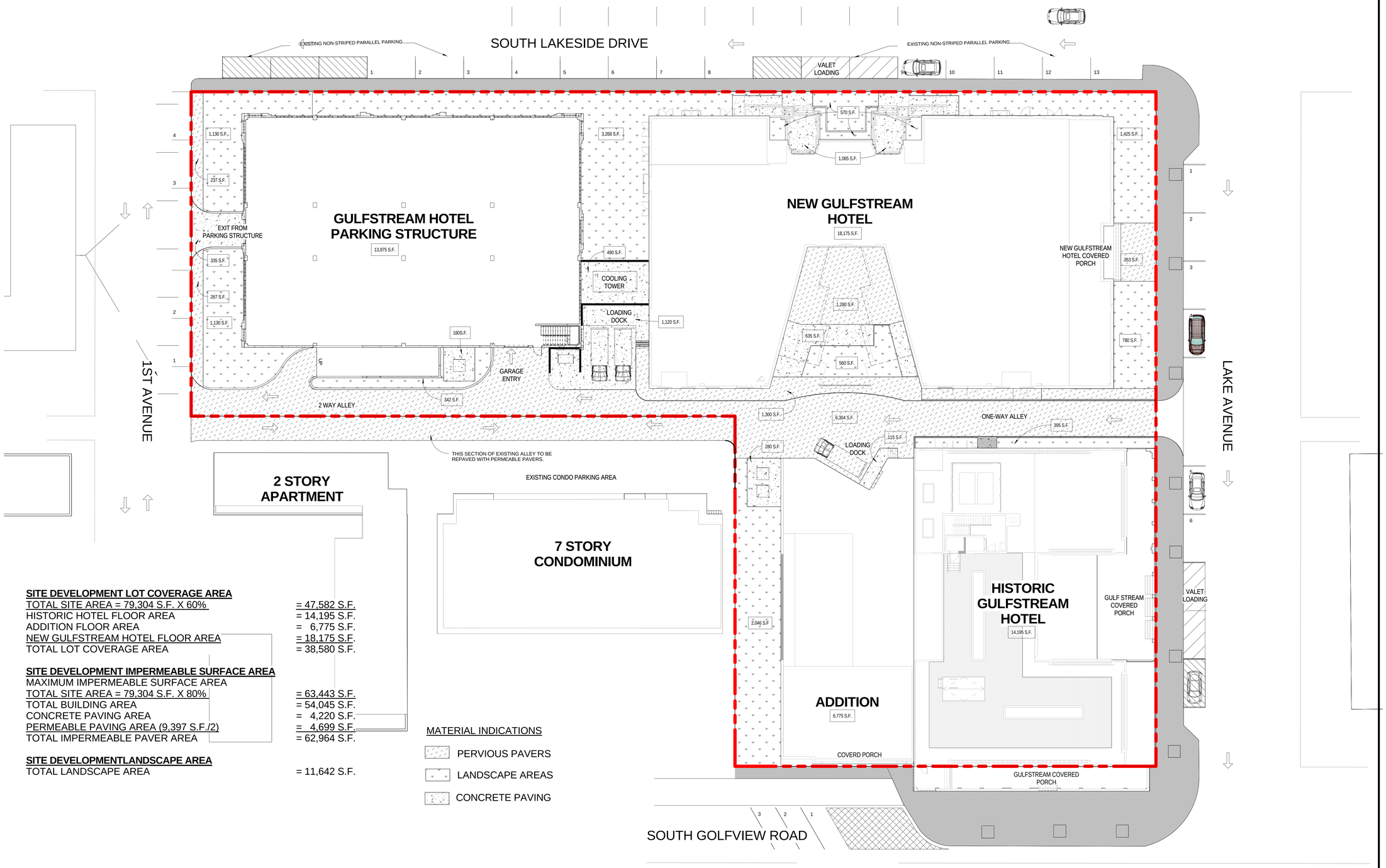

SITE DEVELOPMENT LOT COVERAGE AREA

TOTAL SITE AREA = 79,304 S.F. X 60%	= 47,582 S.F.
HISTORIC HOTEL FLOOR AREA	= 14,195 S.F.
ADDITION FLOOR AREA	= 6,775 S.F.
NEW GULFSTREAM HOTEL FLOOR AREA	= 18,175 S.F.
TOTAL LOT COVERAGE AREA	= 38,580 S.F.

SITE DEVELOPMENT IMPERMEABLE SURFACE AREA

MAXIMUM IMPERMEABLE SURFACE AREA	
TOTAL SITE AREA = 79,304 S.F. X 80%	= 63,443 S.F.
TOTAL BUILDING AREA	= 54,045 S.F.
CONCRETE PAVING AREA	= 4,220 S.F.
PERMEABLE PAVING AREA (9,397 S.F./2)	= 4,699 S.F.
TOTAL IMPERMEABLE PAVER AREA	= 62,964 S.F.

SITE DEVELOPMENTLANDSCAPE AREA

TOTAL LANDSCAPE AREA	= 11,642 S.F.

MATERIAL INDICATIONS

- PERVIOUS PAVERS
- LANDSCAPE AREAS
- CONCRETE PAVING

CONCEPTUAL SITE DEVELOPMENT PLAN - PERMEABLE/NON-PERMEABLE PAVING PLAN

N 0' 8' 16' 32' 64'

JRA architects
829 E Market Street, Suite B
Louisville, Kentucky 40206
502.583.4697

STATE OF FLORIDA MARK E. TRIER AR97544 REGISTERED ARCHITECT

SITE DEVELOPMENT SUBMITTAL

HISTORIC GULFSTREAM HOTEL

HUDSON HOLDINGS, LLC
LAKE WORTH, FL

ARCHITECTURAL

PROJECT	2015-19
DATE	2/17/2016
DRAWN	TLG
CHECKED	MET

REVISIONS

No.	Description	Date
1	CITY COMMENTS	1/18/16
2	SIGNAGE	1/19/16
3	Additional Comments	1/28/16
4	FINAL REVIEW	2/4/16
5	Revised Design	2/26/16

JRA ARCHITECTS HAS RETAINED AN ELECTRONIC VERSION OF THESE DRAWINGS. THE CLIENT AGREES NOT TO REUSE THESE DRAWINGS - IN ELECTRONIC OR ANY OTHER FORMAT - IN WHOLE, OR IN PART, FOR ANY PURPOSE OTHER THAN FOR THE PROJECT. THE CLIENT AGREES NOT TO TRANSFER THESE ELECTRONIC FILES TO OTHERS WITHOUT THE PRIOR WRITTEN CONSENT OF THE ARCHITECT. THE CLIENT FURTHER AGREES TO WAIVE ALL CLAIMS AGAINST THE ARCHITECT RESULTING IN ANY WAY FROM ANY UNAUTHORIZED CHANGES TO OR REUSE OF THE ELECTRONIC FILES FOR ANY OTHER PROJECT BY ANYONE OTHER THAN THE ARCHITECT.

CONCEPTUAL SITE DEVELOPMENT PAVING PLAN

A-3

COPYRIGHT 2016 - JRA, INC.

C:\Users\tgraviss.JRARCHITECTS\Documents\2015\19- GULFSTREAM HOTEL_CENTRAL_tgraviss.rvt
2/28/2016 10:47:00 AM

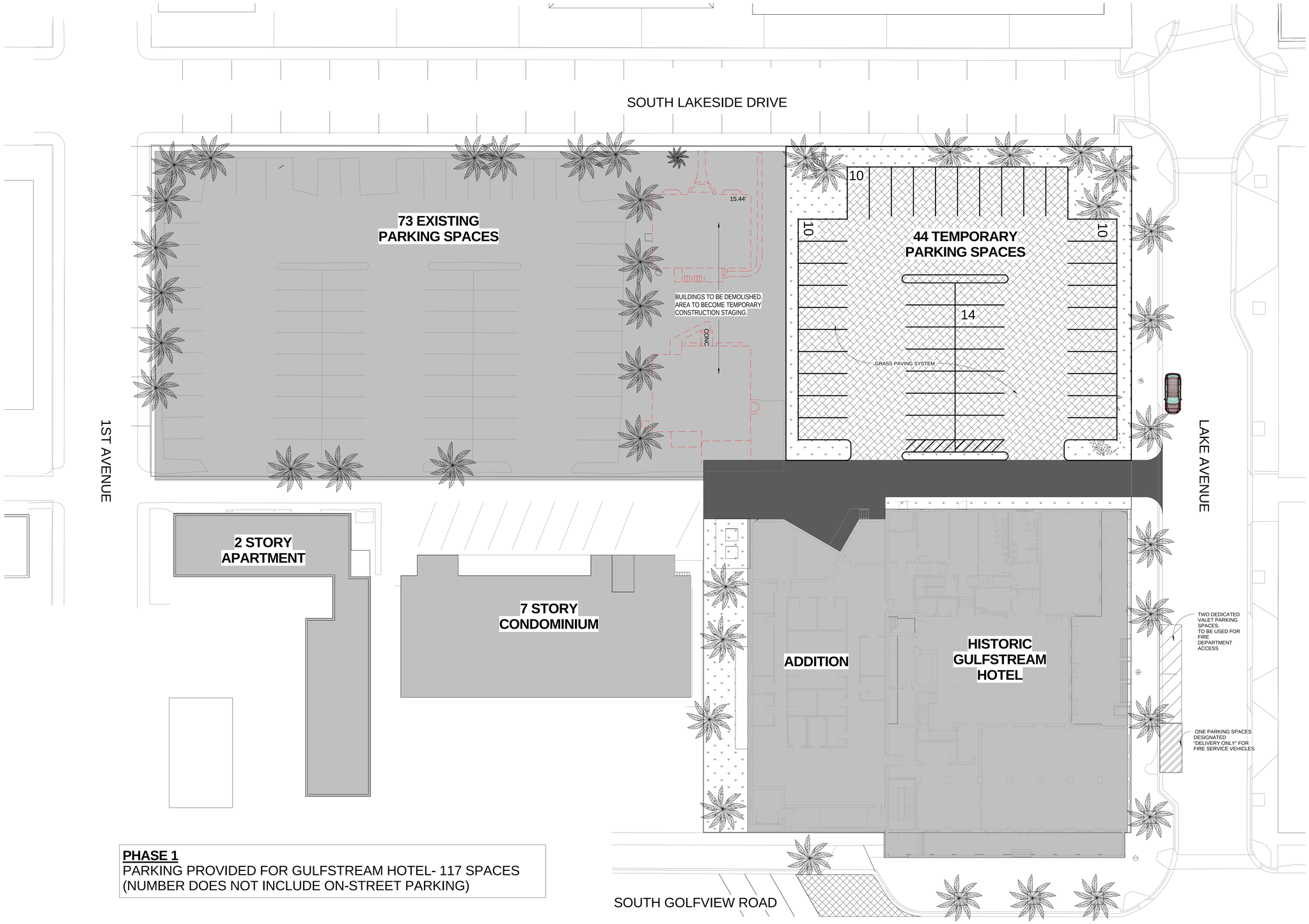

PHASE 1
PARKING PROVIDED FOR GULFSTREAM HOTEL- 117 SPACES
(NUMBER DOES NOT INCLUDE ON-STREET PARKING)

CONCEPTUAL SITE DEVELOPMENT PLAN - PHASE 1 ADDITION AND TEMPORARY PARKING

N

0' 8' 16' 32' 64'

JRA architects
829 E Market Street, Suite B
Louisville, Kentucky 40206
502.583.4697

STATE OF FLORIDA
MARK E. TRIER
AR97544
REGISTERED ARCHITECT

SITE DEVELOPMENT SUBMITTAL

HISTORIC GULFSTREAM HOTEL
SITE DEVELOPMENT SUBMITTAL
HUDSON HOLDINGS, LLC
LAKE WORTH, FL

ARCHITECTURAL

PROJECT	2015-19
DATE	12/07/2015
DRAWN	TLG-AJT
CHECKED	MET

REVISIONS

No.	Description	Date
1	CITY COMMENTS	1/18/16
2	SIGNAGE	1/19/16
3	Additional Comments	1/28/16
4	FINAL REVIEW	2/4/16

JRA ARCHITECTS HAS RETAINED AN ELECTRONIC VERSION OF THESE DRAWINGS. THE CLIENT AGREES NOT TO REUSE THESE DRAWINGS - IN ELECTRONIC OR ANY OTHER FORMAT - IN WHOLE, OR IN PART, FOR ANY PURPOSE OTHER THAN FOR THE PROJECT. THE CLIENT AGREES NOT TO TRANSFER THESE ELECTRONIC FILES TO OTHERS WITHOUT THE PRIOR WRITTEN CONSENT OF THE ARCHITECT. THE CLIENT FURTHER AGREES TO WAIVE ALL CLAIMS AGAINST THE ARCHITECT RESULTING IN ANY WAY FROM ANY UNAUTHORIZED CHANGES TO OR REUSE OF THE ELECTRONIC FILES FOR ANY OTHER PROJECT BY ANYONE OTHER THAN THE ARCHITECT.

PHASE 1- ADDITION AND TEMPORARY PARKING

A-4

COPYRIGHT 2016 - JRA, INC.

C:\Users\atriplett\Documents\201519- GULFSTREAM HOTEL_CENTRAL_atriplett.rvt
2/4/2016 10:40:56 AM

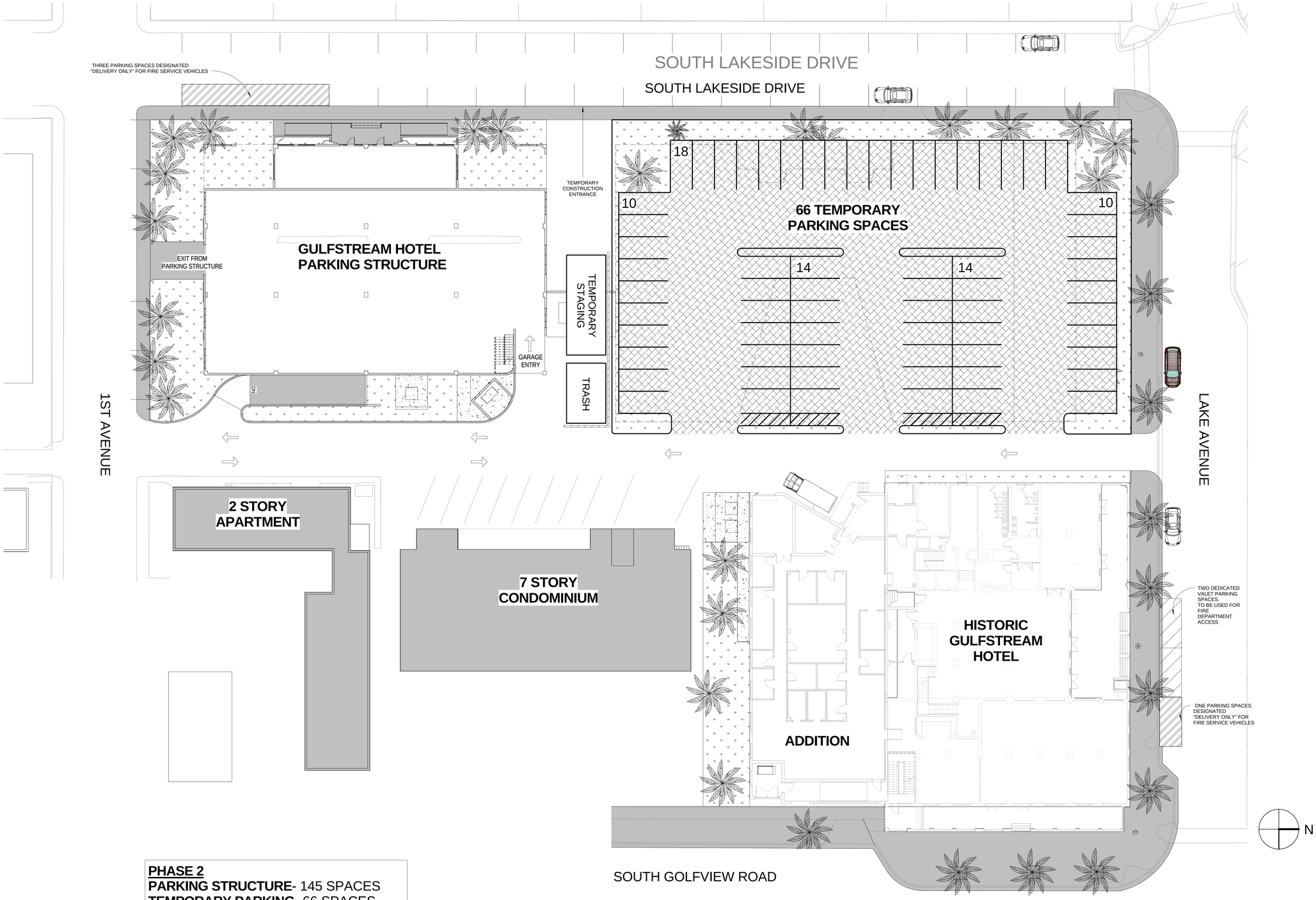

PHASE 2
PARKING STRUCTURE- 145 SPACES
TEMPORARY PARKING- 66 SPACES

CONCEPTUAL SITE DEVELOPMENT PLAN - PHASE 2 PARKING STRUCTURE AND TEMPORARY PARKING

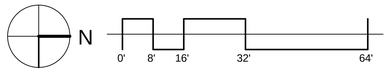

JRA architects
829 E Market Street, Suite B
Louisville, Kentucky 40206
502.583.4697

STATE OF FLORIDA
MARK E. TRIER
AR97544
REGISTERED ARCHITECT

SITE DEVELOPMENT SUBMITTAL

HISTORIC GULFSTREAM HOTEL
SITE DEVELOPMENT SUBMITTAL
HUDSON HOLDINGS, LLC
LAKE WORTH, FL

ARCHITECTURAL

PROJECT	2015-19
DATE	12/07/2015
DRAWN	TLG-AJT
CHECKED	MET

REVISIONS

No.	Description	Date
1	CITY COMMENTS	1/18/16
2	SIGNAGE	1/19/16
3	Additional Comments	1/28/16
4	FINAL REVIEW	2/4/16

JRA ARCHITECTS HAS RETAINED AN ELECTRONIC VERSION OF THESE DRAWINGS. THE CLIENT AGREES NOT TO REUSE THESE DRAWINGS - IN ELECTRONIC OR ANY OTHER FORMAT - IN WHOLE, OR IN PART, FOR ANY PURPOSE OTHER THAN FOR THE PROJECT. THE CLIENT AGREES NOT TO TRANSFER THESE ELECTRONIC FILES TO OTHERS WITHOUT THE PRIOR WRITTEN CONSENT OF THE ARCHITECT. THE CLIENT FURTHER AGREES TO WAIVE ALL CLAIMS AGAINST THE ARCHITECT RESULTING IN ANY WAY FROM ANY UNAUTHORIZED CHANGES TO OR REUSE OF THE ELECTRONIC FILES FOR ANY OTHER PROJECT BY ANYONE OTHER THAN THE ARCHITECT.

PHASE 2- SITE PLAN

A-5

COPYRIGHT 2016 - JRA, INC.

C:\Users\atriplett\Documents\201519- GULFSTREAM HOTEL_CENTRAL_atriplett.rvt
2/4/2016 2:25:30 PM

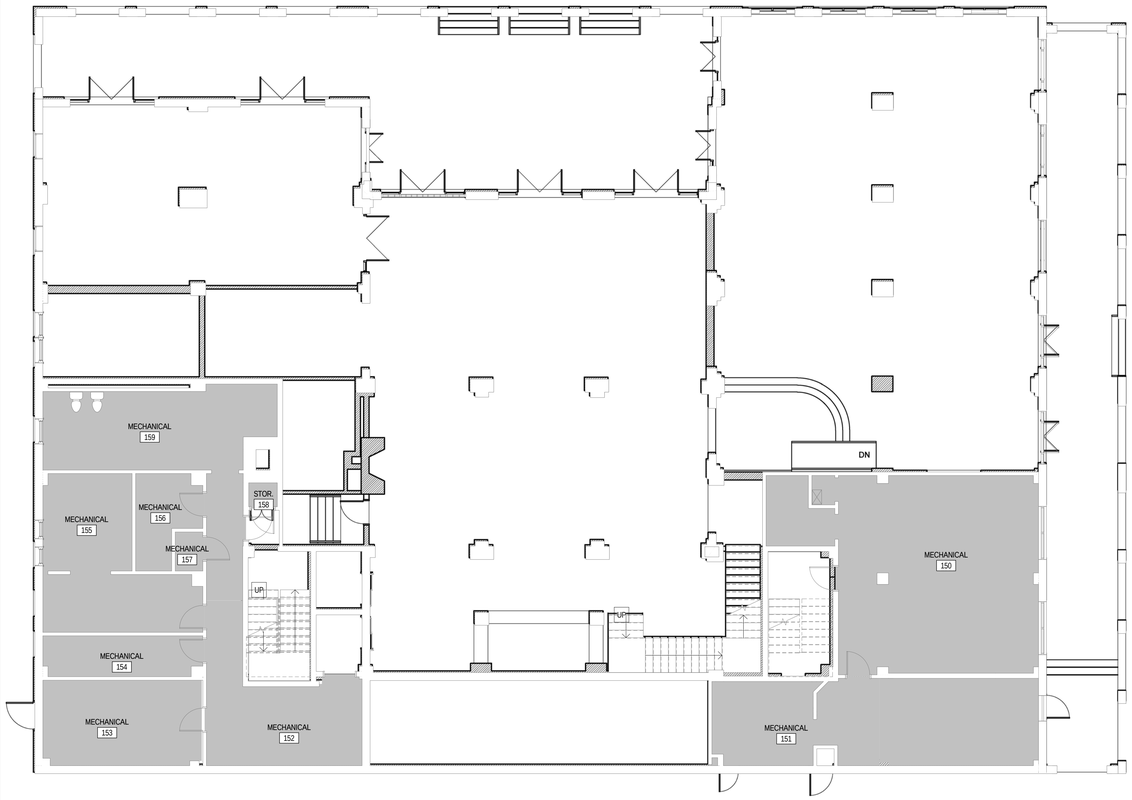

2 HISTORIC GULFSTREAM HOTEL - MEZZANINE FLOOR PLAN

1/8" = 1'-0"

1 HISTORIC GULFSTREM HOTEL AND ADDITION - FIRST FLOOR PLAN

1/8" = 1'-0"

N

0' 4' 8' 16' 32'

JRA architects
829 E Market Street, Suite B
Louisville, Kentucky 40206
502.583.4697

STATE OF FLORIDA
MARK E. THIEL
AR97544
REGISTERED ARCHITECT

SITE DEVELOPMENT SUBMITTAL

GULFSTREAM HOTEL SITE
DEVELOPMENT SUBMITTAL
HUDSON HOLDINGS, LLC
LAKE WORTH, FL

ARCHITECTURAL

PROJECT	2015-19
DATE	12/07/15
DRAWN	AJT
CHECKED	MET

REVISIONS

No.	Description	Date
1	CITY COMMENTS	1/18/16
2	SIGNAGE	1/19/16
3	Additional Comments	1/28/16
4	FINAL REVIEW	2/4/16

JRA ARCHITECTS HAS RETAINED AN ELECTRONIC VERISION OF THESE DRAWINGS. THE CLIENT AGREES NOT TO REUSE THESE DRAWINGS - IN ELECTRONIC OR ANY OTHER FORMAT - IN WHOLE, OR IN PART, FOR ANY PURPOSE OTHER THAN FOR THE SITE IN THE PROJECT, NOR TO EXCHANGE OR TRANSFER THESE ELECTRONIC FILES TO OTHERS WITHOUT THE PRIOR WRITTEN CONSENT OF THE ARCHITECT. THE CLIENT FURTHER AGREES TO WAIVE ALL CLAIMS AGAINST THE ARCHITECT RESULTING IN ANY WAY FROM ANY UNAUTHORIZED CHANGES TO OR REUSE OF THE ELECTRONIC FILES FOR ANY OTHER PROJECT BY ANYONE OTHER THAN THE ARCHITECT.

FIRST FLOOR AND MEZZANINE FLOOR PLAN

A-7

COPYRIGHT 2016 - JRA, INC.

C:\Users\atriplett\Documents\2015\15-19 - GULFESTREAM HOTEL_CS HOTEL_atriplett.rvt
2/4/2016 8:59:55 AM

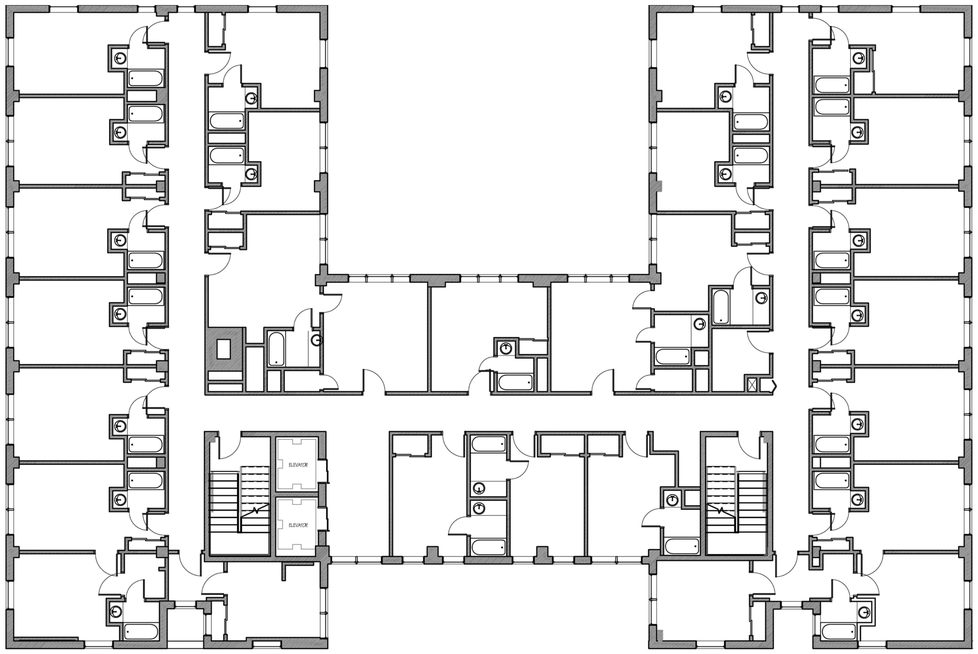

EXISTING FOURTH FLOOR PLAN

1/8" = 1'-0"

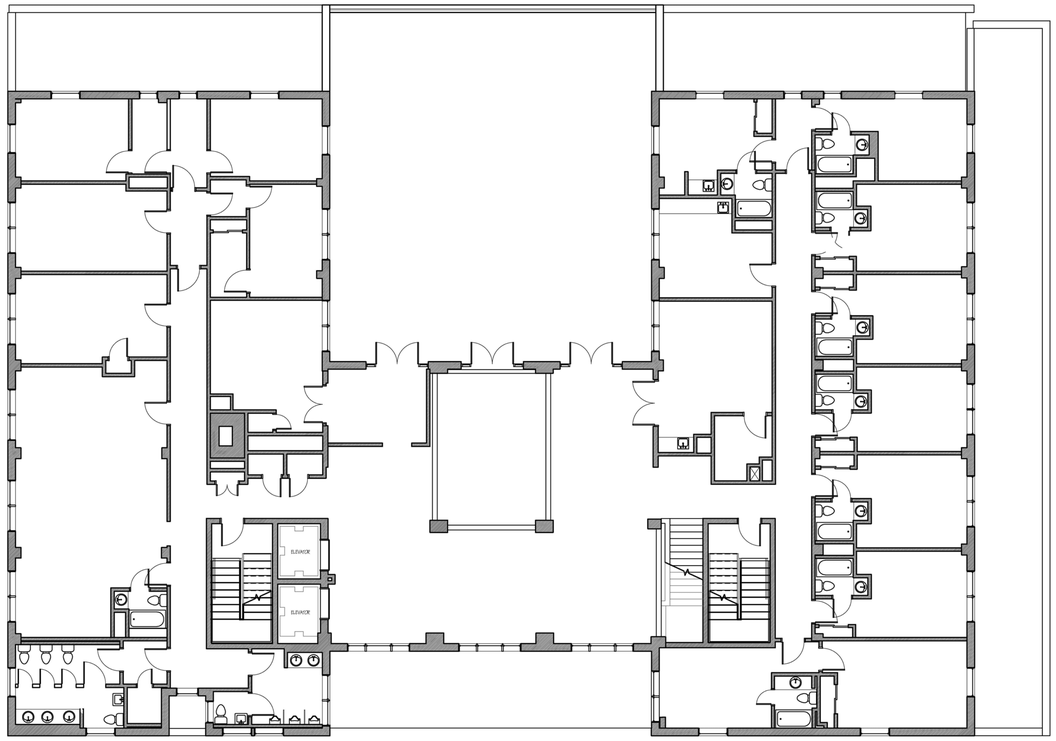

EXISTING SECOND FLOOR PLAN

1/8" = 1'-0"

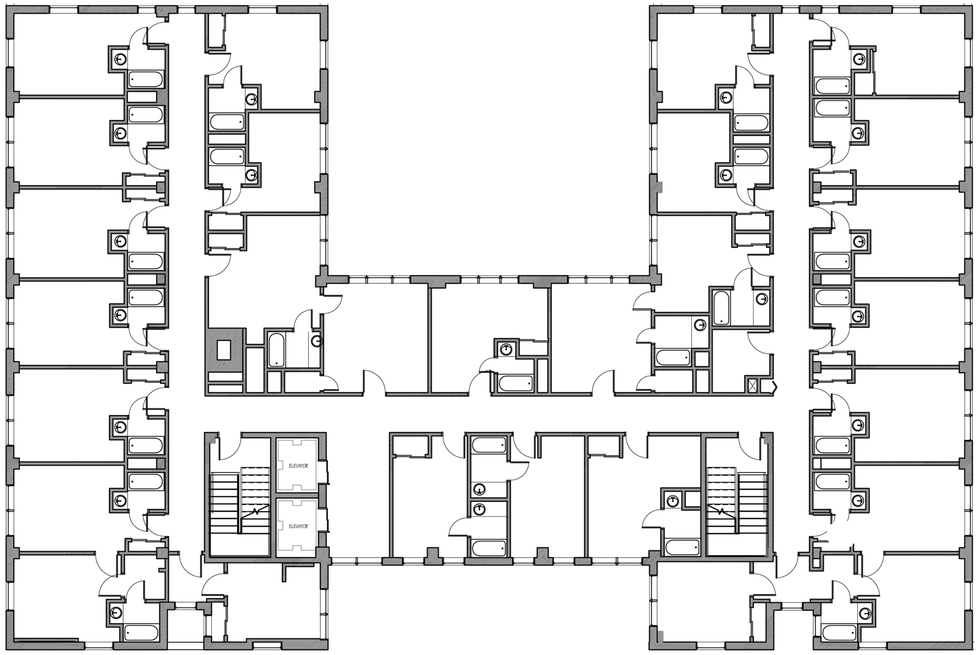

EXISTING THIRD FLOOR PLAN

1/8" = 1'-0"

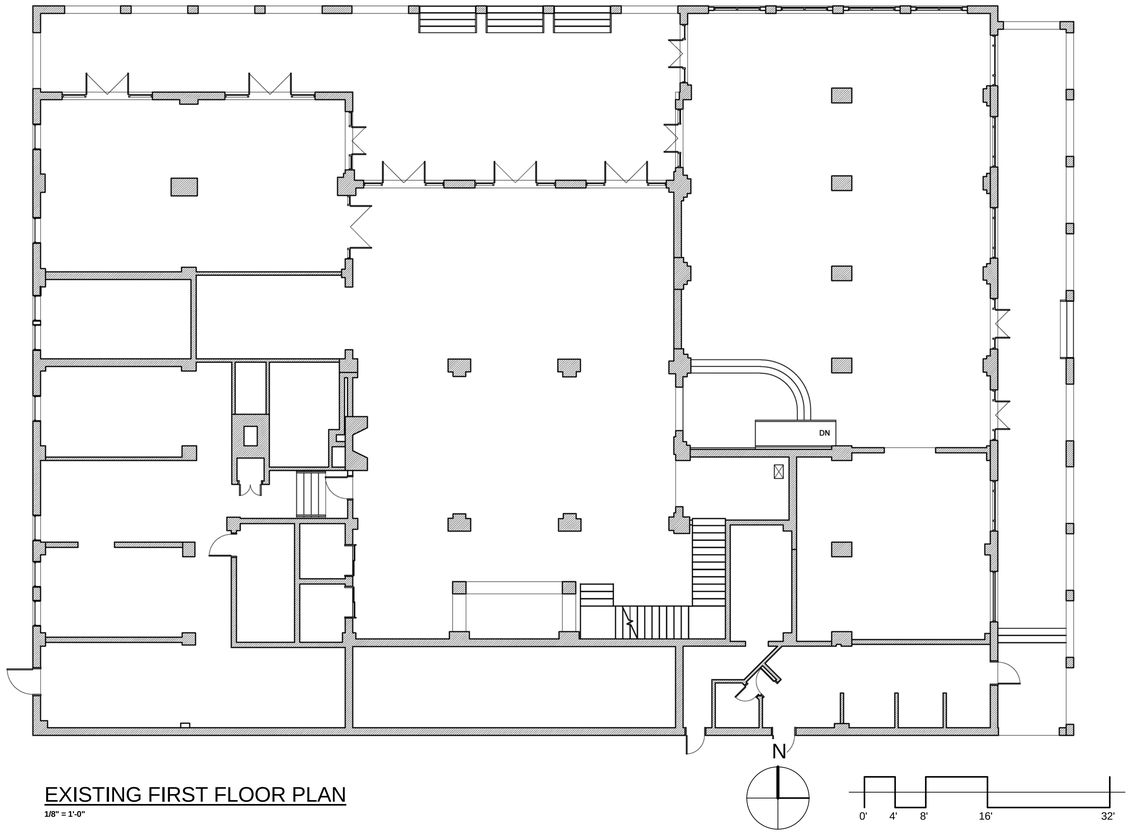

EXISTING FIRST FLOOR PLAN

1/8" = 1'-0"

JRA architects

829 E Market Street, Suite B
Louisville, Kentucky 40206
502.583.4697

STATE OF FLORIDA
MARK E. THIER
AR97544
REGISTERED ARCHITECT

SITE DEVELOPMENT SUBMITTAL

GULFSTREAM HOTEL SITE DEVELOPMENT SUBMITTAL

HUDSON HOLDINGS, LLC
LAKE WORTH, FL

ARCHITECTURAL

PROJECT	2015-19
DATE	12/07/15
DRAWN	AJT, TLG
CHECKED	MET

REVISIONS

No.	Description	Date
1	CITY COMMENTS	1/18/16
2	SIGNAGE	1/19/16
3	Additional Comments	1/28/16
4	FINAL REVIEW	2/4/16

JRA ARCHITECTS HAS RETAINED AN ELECTRONIC VERSION OF THESE DRAWINGS. THE CLIENT AGREES NOT TO REUSE THESE DRAWINGS - IN ELECTRONIC OR ANY OTHER FORMAT - IN WHOLE, OR IN PART, FOR ANY PURPOSE OTHER THAN FOR THE PROJECT. THE CLIENT AGREES NOT TO TRANSFER THESE ELECTRONIC FILES TO OTHERS WITHOUT THE PRIOR WRITTEN CONSENT OF THE ARCHITECT. THE CLIENT FURTHER AGREES TO WAIVE ALL CLAIMS AGAINST THE ARCHITECT RESULTING IN ANY WAY FROM ANY UNAUTHORIZED CHANGES TO OR REUSE OF THE ELECTRONIC FILES FOR ANY OTHER PROJECT BY ANYONE OTHER THAN THE ARCHITECT.

EXISTING FLOOR PLANS

A-8A

COPYRIGHT 2016 - JRA, INC.

C:\Users\atriplett\Documents\201519- GULFSTREAM HOTEL_GS HOTEL_atriplett.rvt

2/4/2016 9:16:42 AM

C:\Users\atriplett\Documents\2015\19- GULFSTREAM HOTEL_CS HOTEL_atriplett.rvt

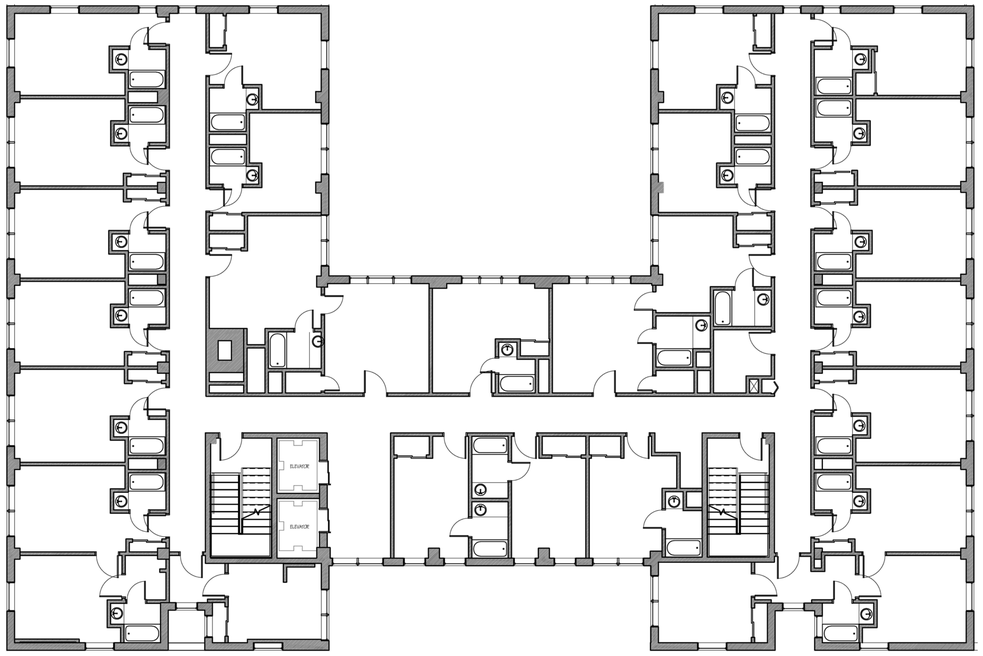

EXISTING SIXTH FLOOR PLAN

1/8" = 1'-0"

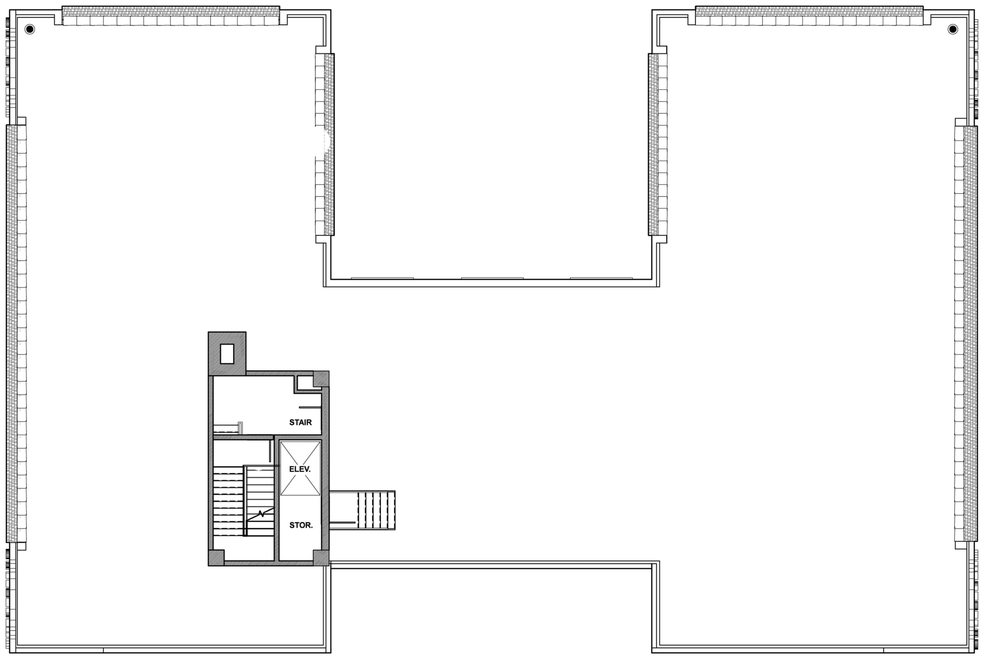

EXISTING ROOF PLAN

1/8" = 1'-0"

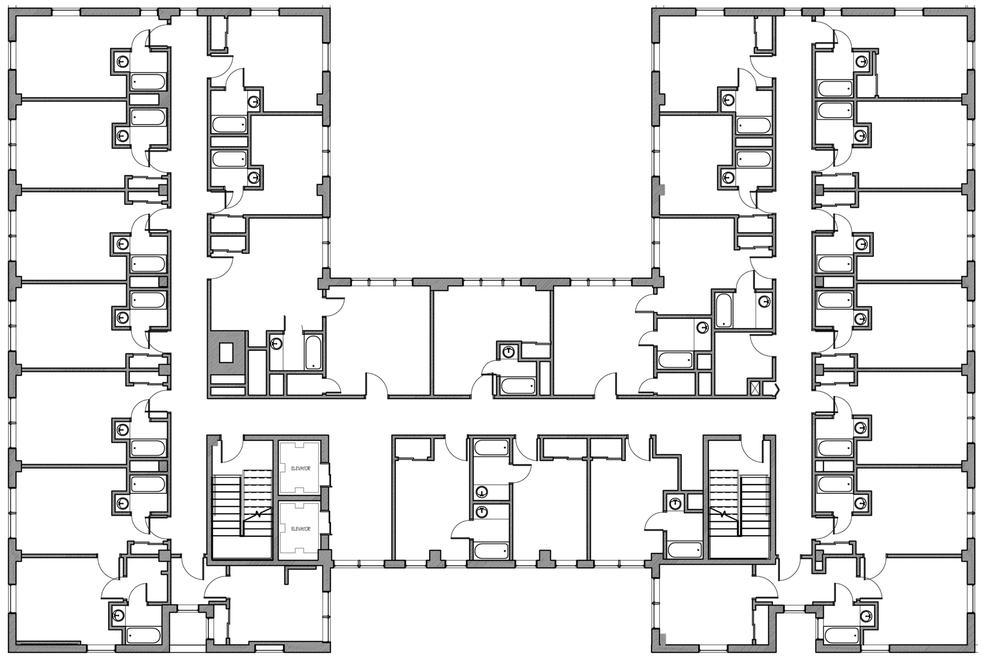

EXISTING FIFTH FLOOR PLAN

1/8" = 1'-0"

0' 4' 8' 16' 32'

2/4/2016 9:18:26 AM

JRA architects
829 E Market Street, Suite B
Louisville, Kentucky 40206
502.583.4697

STATE OF FLORIDA
MARK E. THIEL
AR97544
REGISTERED ARCHITECT

SITE DEVELOPMENT SUBMITTAL

GULFSTREAM HOTEL SITE DEVELOPMENT SUBMITTAL

HUDSON HOLDINGS, LLC
LAKE WORTH, FL

ARCHITECTURAL

PROJECT	2015-19
DATE	12/07/15
DRAWN	AJT, TLG
CHECKED	MET

REVISIONS

No.	Description	Date
1	CITY COMMENTS	1/18/16
2	SIGNAGE	1/19/16
3	Additional Comments	1/28/16
4	FINAL REVIEW	2/4/16

JRA ARCHITECTS HAS RETAINED AN ELECTRONIC VERSION OF THESE DRAWINGS. THE CLIENT AGREES NOT TO REUSE THESE DRAWINGS - IN ELECTRONIC OR ANY OTHER FORMAT - IN WHOLE, OR IN PART, FOR ANY PURPOSE OTHER THAN FOR THIS PROJECT. THE CLIENT AGREES NOT TO TRANSFER THESE ELECTRONIC FILES TO OTHERS WITHOUT THE PRIOR WRITTEN CONSENT OF THE ARCHITECT. THE CLIENT FURTHER AGREES TO WAIVE ALL CLAIMS AGAINST THE ARCHITECT RESULTING IN ANY WAY FROM ANY UNAUTHORIZED CHANGES TO OR USE OF THESE DRAWINGS - IN WHOLE OR IN PART - FOR ANY OTHER PROJECT BY ANYONE OTHER THAN THE ARCHITECT.

EXISTING FLOOR PLANS

A-8B

COPYRIGHT 2016 - JRA, INC.

3 **EXISTING EXTERIOR ELEVATION- NORTH - LAKE AVE VIEW**
3/32" = 1'-0"

4 **EXISTING EXTERIOR ELEVATION- EAST - SOUTH GULFVIEW ROAD VIEW**
3/32" = 1'-0"

1 **EXISTING EXTERIOR ELEVATION - WEST ALLEY VIEW**
3/32" = 1'-0"

2 **EXISTING EXTERIOR ELEVATION - SOUTH VIEW**
3/32" = 1'-0"

JRA architects
829 E Market Street, Suite B
Louisville, Kentucky 40206
502.583.4697

STATE OF FLORIDA
MARK E. THIER
AR97544
REGISTERED ARCHITECT

SITE DEVELOPMENT SUBMITTAL

GULFSTREAM HOTEL SITE DEVELOPMENT SUBMITTAL
HUDSON HOLDINGS, LLC
LAKE WORTH, FL

ARCHITECTURAL

PROJECT	2015-19
DATE	12/07/15
DRAWN	AJT, TLG
CHECKED	MET

REVISIONS

No.	Description	Date
1	CITY COMMENTS	1/18/16
2	SIGNAGE	1/19/16
3	Additional Comments	1/28/16
4	FINAL REVIEW	2/4/16
5	Revised Design	2/26/16

JRA ARCHITECTS HAS RETAINED AN ELECTRONIC VERSION OF THESE DRAWINGS. THE CLIENT AGREES NOT TO REUSE THESE DRAWINGS - IN ELECTRONIC OR ANY OTHER FORMAT - IN WHOLE, OR IN PART, FOR ANY PURPOSE OTHER THAN FOR THE PROJECT. THE CLIENT AGREES NOT TO TRANSFER THESE ELECTRONIC FILES TO OTHERS WITHOUT THE PRIOR WRITTEN CONSENT OF THE ARCHITECT. THE CLIENT FURTHER AGREES TO WAIVE ALL CLAIMS AGAINST THE ARCHITECT RESULTING IN ANY WAY FROM ANY UNAUTHORIZED CHANGES TO OR REUSE OF THE ELECTRONIC FILES FOR ANY OTHER PROJECT BY ANYONE OTHER THAN THE ARCHITECT.

EXISTING EXTERIOR ELEVATIONS

A-8C

COPYRIGHT 2016 - JRA, INC.

C:\Users\tgraviss.JRARCHITECTS\Documents\201519- GULFSTREAM HOTEL_GS HOTEL_tgraviss.rvt
2/28/2016 10:59:52 AM

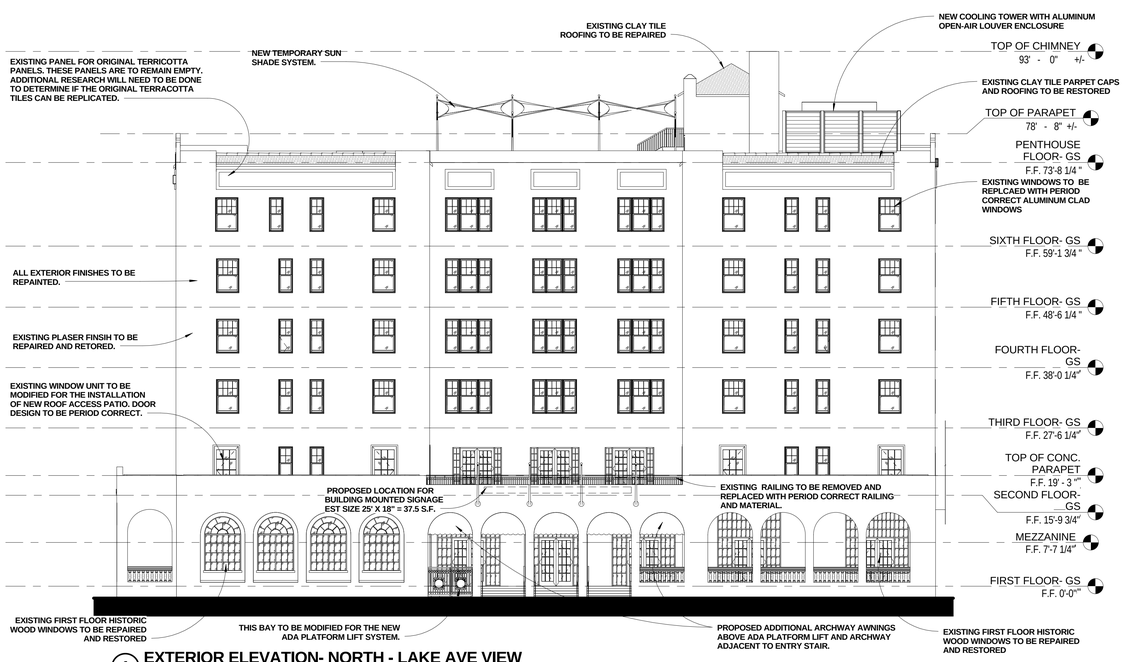

1 **EXTERIOR ELEVATION- NORTH - LAKE AVE VIEW**
3/32" = 1'-0"

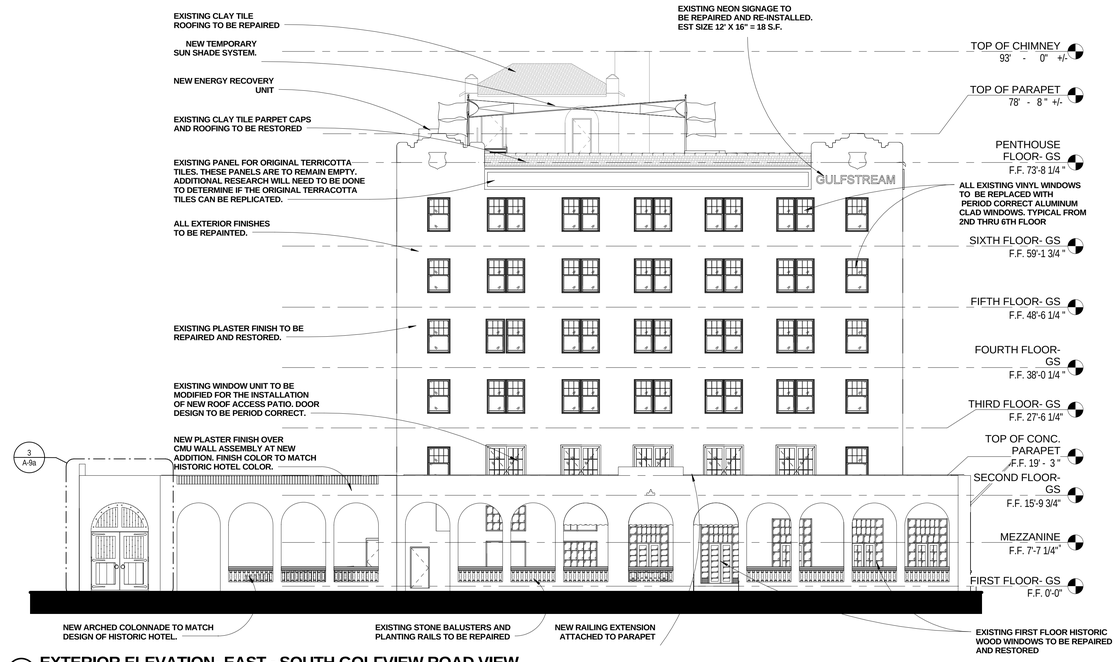

2 **EXTERIOR ELEVATION- EAST - SOUTH GOLFVIEW ROAD VIEW**
3/32" = 1'-0"

EXTERIOR BUILDING SIGNAGE	
EAST FACADE	= 18 S.F.
WEST FACADE	= 18 S.F.
NORTH FACADE	= 37.5 S.F.
TOTAL SIGNAGE AREA	= 73.5 S.F.

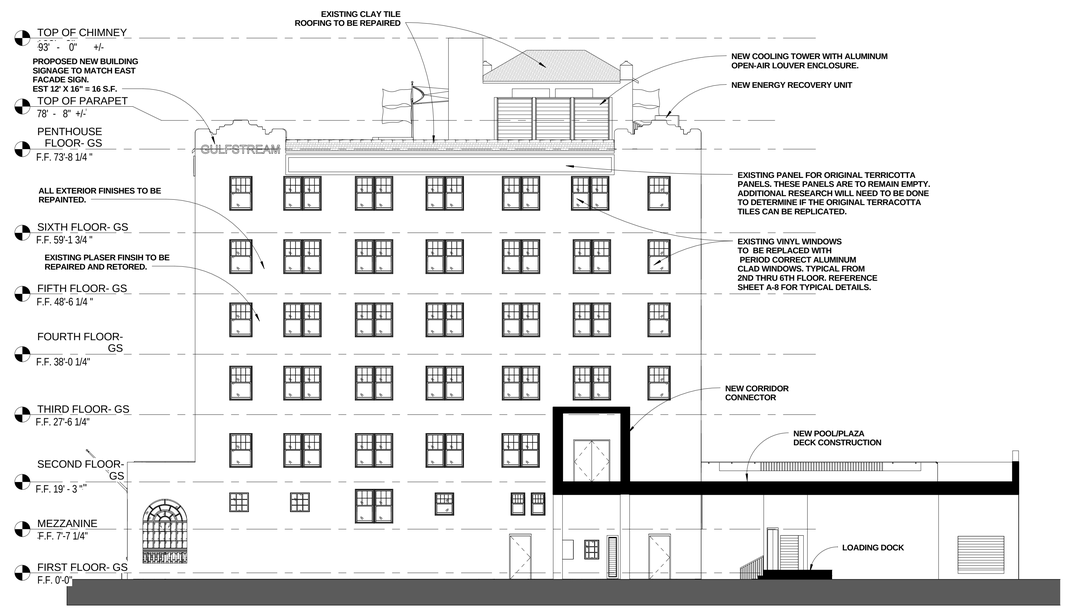

4 **EXTERIOR ELEVATION - WEST**
3/32" = 1'-0"

5 **EXTERIOR ELEVATION - SOUTH**
3/32" = 1'-0"

JRA architects
829 E Market Street, Suite B
Louisville, Kentucky 40206
502.583.4697

STATE OF FLORIDA MARK E. THIEL AR97544 REGISTERED ARCHITECT

SITE DEVELOPMENT SUBMITTAL

GULFSTREAM HOTEL SITE DEVELOPMENT SUBMITTAL
HUDSON HOLDINGS, LLC
LAKE WORTH, FL

ARCHITECTURAL

PROJECT	2015-19
DATE	12/07/15
DRAWN	AJT
CHECKED	MET

REVISIONS

No.	Description	Date
1	CITY COMMENTS	1/18/16
2	SIGNAGE	1/19/16
3	Additional Comments	1/28/16
4	FINAL REVIEW	2/4/16
5	Revised Design	2/26/16

JRA ARCHITECTS HAS RETAINED AN ELECTRONIC VERSION OF THESE DRAWINGS. THE CLIENT AGREES NOT TO REUSE THESE DRAWINGS - IN ELECTRONIC OR ANY OTHER FORMAT - IN WHOLE, OR IN PART, FOR ANY PURPOSE OTHER THAN FOR THIS PROJECT. THE CLIENT AGREES NOT TO TRANSFER THESE ELECTRONIC FILES TO OTHERS WITHOUT THE PRIOR WRITTEN CONSENT OF THE ARCHITECT. THE CLIENT FURTHER AGREES TO WAVE ALL CLAIMS AGAINST THE ARCHITECT RESULTING IN ANY WAY FROM ANY UNAUTHORIZED CHANGES OR REUSE OF THE ELECTRONIC FILES FOR ANY OTHER PROJECT BY ANYONE OTHER THAN THE ARCHITECT.

EXTERIOR ELEVATIONS

A-9

COPYRIGHT 2016 - JRA, INC.

C:\Users\tgrness.JRAARCHITECTS\Documents\2015\19_GULFSTREAM HOTEL_GS HOTEL_tgrness.rvt
2/28/2016 10:57:47 AM

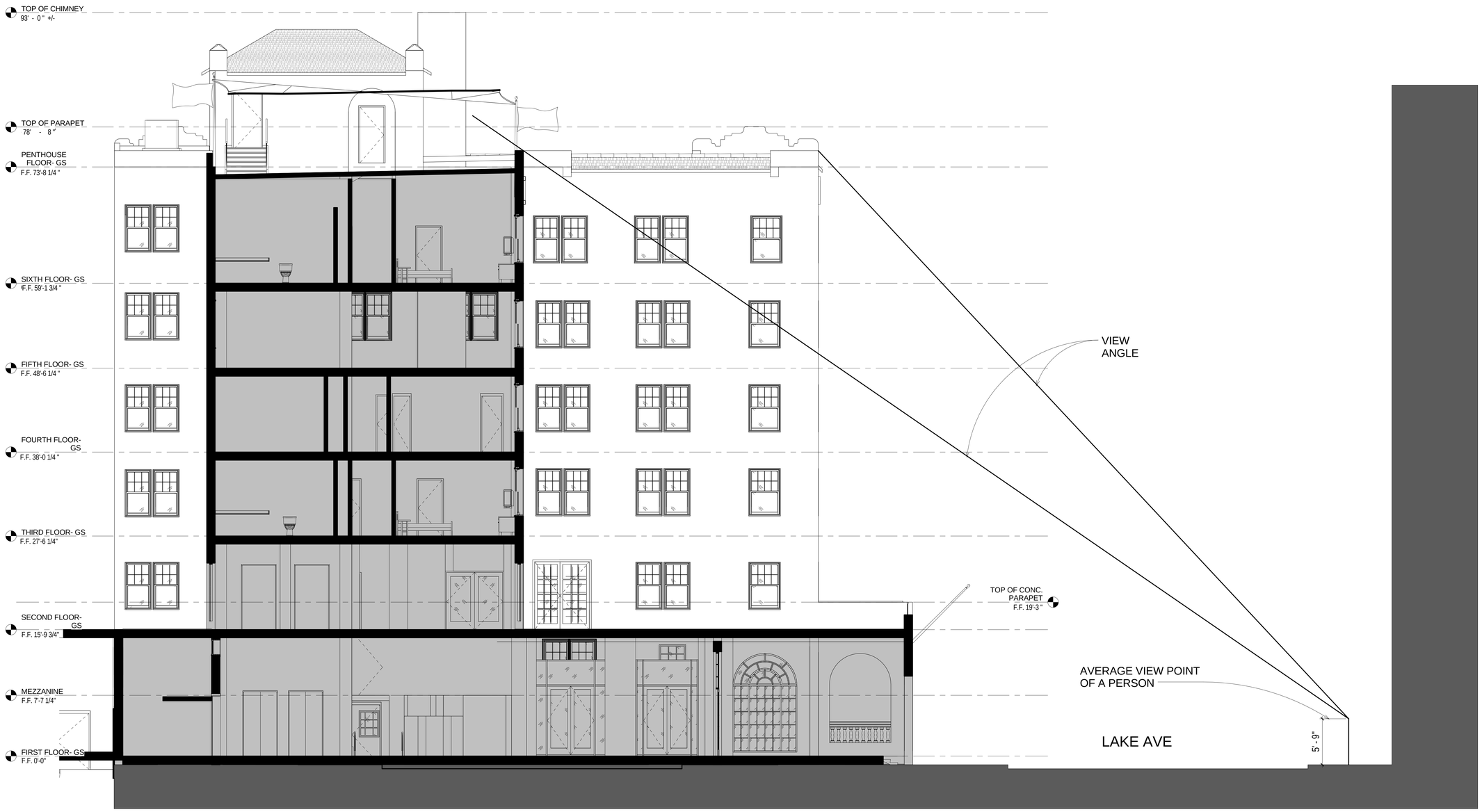

1 SIGHTLINE STUDY FROM LAKE AVE EAST - WEST SECTION AT COURTYARD
3/16" = 1'-0"

0' 2.8' 5.6' 11.2' 22.4'

JRA architects
829 E Market Street, Suite B
Louisville, Kentucky 40206
502.583.4697

STATE OF FLORIDA
MARK E. THIER
AR97544
REGISTERED ARCHITECT

SITE DEVELOPMENT SUBMITTAL

GULFSTREAM HOTEL SITE DEVELOPMENT SUBMITTAL
HUDSON HOLDINGS, LLC
LAKE WORTH, FL

ARCHITECTURAL

PROJECT	2015-19
DATE	12/07/15
DRAWN	AJT/TLG
CHECKED	MET

REVISIONS

No.	Description	Date
1	CITY COMMENTS	1/18/16
2	SIGNAGE	1/19/16
3	Additional Comments	1/28/16
4	FINAL REVIEW	2/4/16
5	Revised Design	2/26/16

JRA ARCHITECTS HAS RETAINED AN ELECTRONIC VERSION OF THESE DRAWINGS. THE CLIENT AGREES NOT TO REUSE THESE DRAWINGS - IN ELECTRONIC OR ANY OTHER FORMAT - IN WHOLE, OR IN PART, FOR ANY PURPOSE OTHER THAN FOR THE PROJECT. THE CLIENT AGREES NOT TO TRANSFER THESE ELECTRONIC FILES TO OTHERS WITHOUT THE PRIOR WRITTEN CONSENT OF THE ARCHITECT. THE CLIENT FURTHER AGREES TO WAIVE ALL CLAIMS AGAINST THE ARCHITECT RESULTING IN ANY WAY FROM ANY UNAUTHORIZED CHANGES TO OR REUSE OF THE ELECTRONIC FILES FOR ANY OTHER PROJECT BY ANYONE OTHER THAN THE ARCHITECT.

SIGHT LINE STUDY

A-10

COPYRIGHT 2016 - JRA, INC.

C:\Users\atriplett\Documents\2015\19- GULFSTREAM HOTEL_GS HOTEL_atriplett.rvt
3/1/2016 11:39:57 AM

HISTORIC GULFSTREAM HOTEL AND ADDITION - SIGHT LINE STUDY NORTH - SOUTH SECTION

1 3/16" = 1'-0"

JRA architects
829 E Market Street, Suite B
Louisville, Kentucky 40206
502.583.4697

STATE OF FLORIDA
MARK E. TRIER
AR97544
REGISTERED ARCHITECT

SITE DEVELOPMENT SUBMITTAL

GULFSTREAM HOTEL SITE DEVELOPMENT SUBMITTAL
HUDSON HOLDINGS, LLC
LAKE WORTH, FL

ARCHITECTURAL

PROJECT	2015-19
DATE	12/07/15
DRAWN	AJT/TLG
CHECKED	MET

REVISIONS

No.	Description	Date
1	CITY COMMENTS	1/18/16
2	SIGNAGE	1/19/16
3	Additional Comments	1/28/16
4	FINAL REVIEW	2/4/16
5	Revised Design	2/26/16

JRA ARCHITECTS HAS RETAINED AN ELECTRONIC VERSION OF THESE DRAWINGS. THE CLIENT AGREES NOT TO REUSE THESE DRAWINGS - IN ELECTRONIC OR ANY OTHER FORMAT - IN WHOLE, OR IN PART, FOR ANY PURPOSE OTHER THAN FOR THE PROJECT. THE CLIENT AGREES NOT TO TRANSFER THESE ELECTRONIC FILES TO OTHERS WITHOUT THE PRIOR WRITTEN CONSENT OF THE ARCHITECT. THE CLIENT FURTHER AGREES TO WAIVE ALL CLAIMS AGAINST THE ARCHITECT RESULTING IN ANY WAY FROM ANY UNAUTHORIZED CHANGES TO OR REUSE OF THE ELECTRONIC FILES FOR ANY OTHER PROJECT BY ANYONE OTHER THAN THE ARCHITECT.

SIGHT LINE STUDY

A-11

COPYRIGHT 2016 - JRA, INC.

C:\Users\atriplett\Documents\201519- GULFSTREAM HOTEL_GS HOTEL_atriplett.rvt
3/1/2016 11:38:23 AM

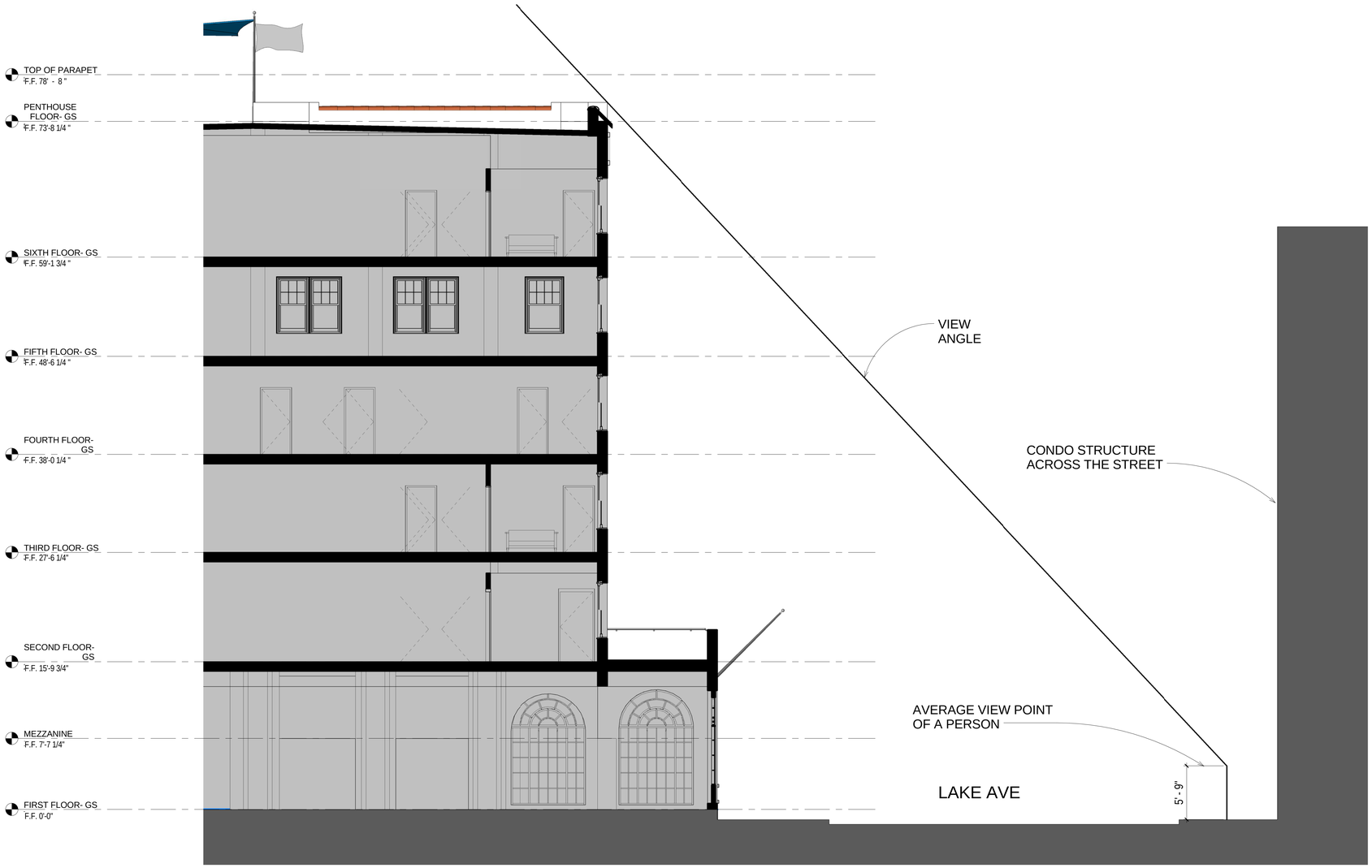

1 **SIGHT LINE STUDY AT LAKE AVE - EAST WING**
3/16" = 1'-0"

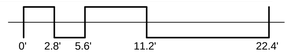

JRA architects
829 E Market Street, Suite B
Louisville, Kentucky 40206
502.583.4697

STATE OF FLORIDA
MARK E. THIER
AR97544
REGISTERED ARCHITECT

SITE DEVELOPMENT SUBMITTAL

GULFSTREAM HOTEL SITE DEVELOPMENT SUBMITTAL
HUDSON HOLDINGS, LLC
LAKE WORTH, FL

ARCHITECTURAL

PROJECT	2015-19
DATE	12/07/15
DRAWN	AJT/TLG
CHECKED	MET

REVISIONS

No.	Description	Date
1	CITY COMMENTS	1/18/16
2	SIGNAGE	1/19/16
3	Additional Comments	1/28/16
4	FINAL REVIEW	2/4/16
5	Revised Design	2/26/16

JRA ARCHITECTS HAS RETAINED AN ELECTRONIC VERSION OF THESE DRAWINGS. THE CLIENT AGREES NOT TO REUSE THESE DRAWINGS - IN ELECTRONIC OR ANY OTHER FORMAT - IN WHOLE, OR IN PART, FOR ANY PURPOSE OTHER THAN FOR THE PROJECT. THE CLIENT AGREES NOT TO TRANSFER THESE ELECTRONIC FILES TO OTHERS WITHOUT THE PRIOR WRITTEN CONSENT OF THE ARCHITECT. THE CLIENT FURTHER AGREES TO WAIVE ALL CLAIMS AGAINST THE ARCHITECT RESULTING IN ANY WAY FROM ANY UNAUTHORIZED CHANGES TO OR REUSE OF THE ELECTRONIC FILES FOR ANY OTHER PROJECT BY ANYONE OTHER THAN THE ARCHITECT.

SIGHT LINE STUDY

A-12

COPYRIGHT 2016 - JRA, INC.

C:\Users\atriplett\Documents\201519- GULFSTREAM HOTEL_GS HOTEL_atriplett.rvt
3/1/2016 11:34:11 AM

1 FIRST FLOOR- ANNEX
1/8" = 1'-0"

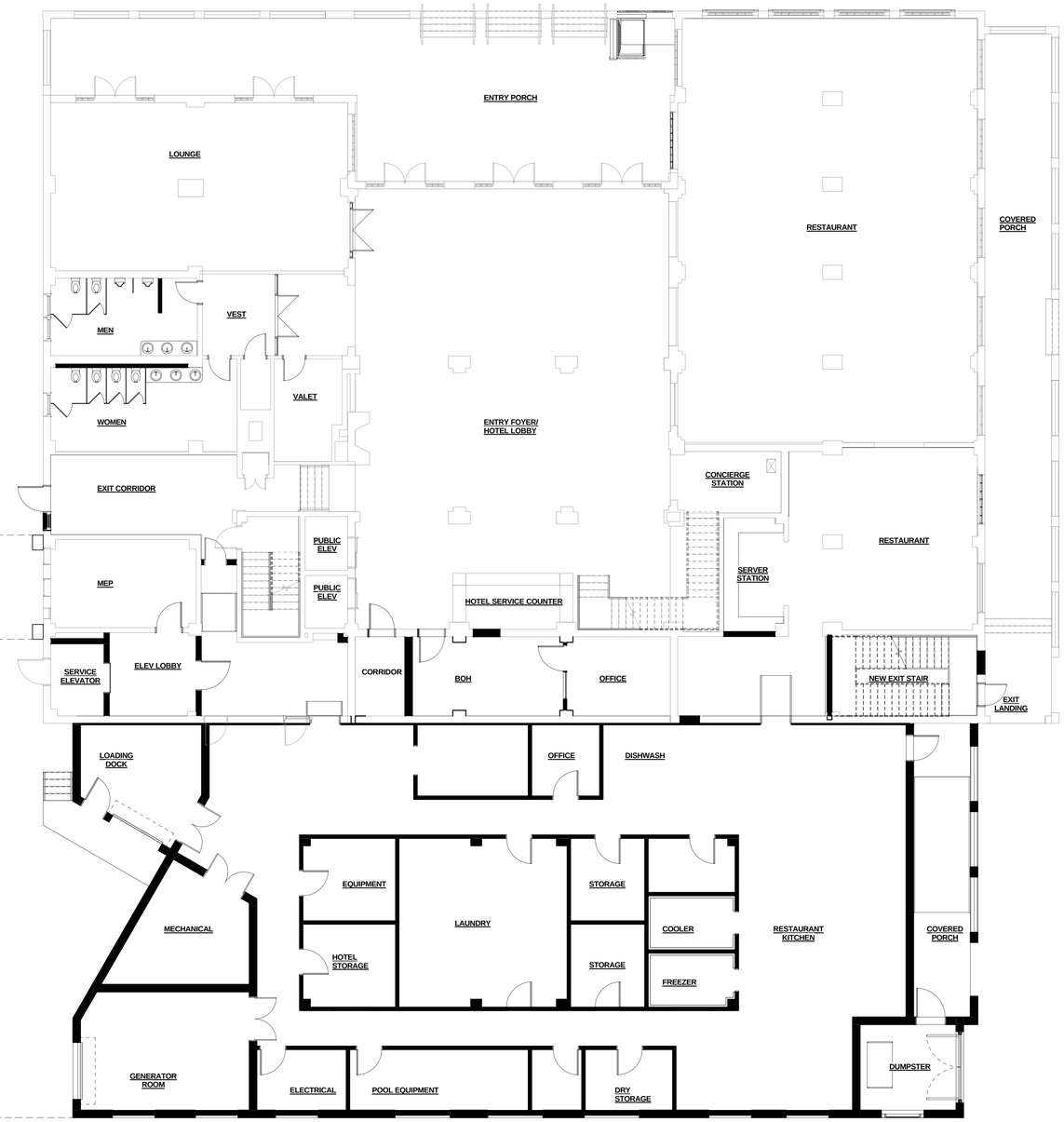

Color Legend - Use

- TWO BEDROOM SUITE -TYPE B
- TWO BEDROOM SUITE - TYPE C
- TWO BEDROOM SUITE - TYPE D
- DELUXE DBL. QUEEN - TYPE A
- HOTEL AMENITY
- OFFICE
- RESTROOM
- SERVICE
- SERVICE ELEVATOR
- KING - TYPE A
- PUBLIC

N

0' 4' 8' 16' 32'

JRA architects
829 E Market Street, Suite B
Louisville, Kentucky 40206
502.583.4697

STATE OF FLORIDA
MARK E. TRIER
AR97544
REGISTERED ARCHITECT

SITE DEVELOPMENT SUBMITTAL

HISTORIC GULFSTREAM HOTEL
SITE DEVELOPMENT SUBMITTAL
HUDSON HOLDINGS, LLC
LAKE WORTH, FL

ARCHITECTURAL

PROJECT	2015-19
DATE	12/07/15
DRAWN	AJT, SC
CHECKED	MET

REVISIONS

No.	Description	Date
1	CITY COMMENTS	1/18/16
2	SIGNAGE	1/19/16
3	Additional Comments	1/28/16
4	FINAL REVIEW	2/4/16
5	Revised Design	2/26/16

JRA ARCHITECTS HAS RETAINED AN ELECTRONIC VERSION OF THESE DRAWINGS. THE CLIENT AGREES NOT TO REUSE THESE DRAWINGS - IN ELECTRONIC OR ANY OTHER FORMAT - IN WHOLE, OR IN PART, FOR ANY PURPOSE OTHER THAN FOR THE PROJECT. THE CLIENT AGREES NOT TO TRANSFER THESE ELECTRONIC FILES TO OTHERS WITHOUT THE PRIOR WRITTEN CONSENT OF THE ARCHITECT. THE CLIENT FURTHER AGREES TO WAIVE ALL CLAIMS AGAINST THE ARCHITECT RESULTING IN ANY WAY FROM ANY UNAUTHORIZED CHANGES TO OR REUSE OF THE ELECTRONIC FILES FOR ANY OTHER PROJECT BY ANYONE OTHER THAN THE ARCHITECT.

CONCEPTUAL GULFSTREAM HOTEL ANNEX - FIRST FLOOR PLAN

A-13

COPYRIGHT 2016 - JRA, INC.

C:\Users\atriplett\Documents\201519- GULFSTREAM HOTEL_ANNEX_atriplett.rvt
2/28/2016 11:50:31 AM

C:\Users\staplet\Documents\2015\19- GULFSTREAM HOTEL_ANNEX_atriplett.rvt

1 **SECOND FLOOR- ANNEX**
1/8" = 1'-0"

Color Legend - Use

- HOTEL AMENITY
- KING - TYPE B
- 1 BEDROOM SUITE - TYPE B
- 1 BEDROOM SUITE - TYPE C
- 1 BEDROOM SUITE - TYPE D
- 2 BEDROOM SUITE - TYPE E
- DELUXE DBL QUEEN - TYPE B
- KING - TYPE C
- PREMIUM 1 BEDROOM SUITE - TYPE C
- PREMIUM 1 BEDROOM SUITE - TYPE D
- PREMIUM 2 BEDROOM SUITE - TYPE E

N

0' 4' 8' 16' 32'

2/29/2016 11:57:20 AM

JRA architects
829 E Market Street, Suite B
Louisville, Kentucky 40206
502.583.4697

STATE OF FLORIDA
MARK E. THIER
AR97544
REGISTERED ARCHITECT

SITE DEVELOPMENT SUBMITTAL

HISTORIC GULFSTREAM HOTEL
SITE DEVELOPMENT SUBMITTAL
HUDSON HOLDINGS, LLC
LAKE WORTH, FL

PROJECT	2015-19
DATE	12/07/15
DRAWN	AJT, SC
CHECKED	MET

REVISIONS

No.	Description	Date
1	CITY COMMENTS	1/18/16
2	SIGNAGE	1/19/16
3	Additional Comments	1/28/16
4	FINAL REVIEW	2/4/16
5	Revised Design	2/26/16

JRA ARCHITECTS HAS RETAINED AN ELECTRONIC VERSION OF THESE DRAWINGS. THE CLIENT AGREES NOT TO REUSE THESE DRAWINGS - IN ELECTRONIC OR ANY OTHER FORMAT - IN WHOLE, OR IN PART, FOR ANY PURPOSE OTHER THAN FOR THE SITE OF THIS PROJECT AND NOT TO TRANSFER THESE ELECTRONIC FILES TO OTHERS WITHOUT THE PRIOR WRITTEN CONSENT OF THE ARCHITECT. THE CLIENT FURTHER AGREES TO WAIVE ALL CLAIMS AGAINST THE ARCHITECT THAT MAY RESULT IN WAY FROM ANY UNAUTHORIZED CHANGES TO OR REUSE OF THE ELECTRONIC FILES FOR ANY OTHER PROJECT BY ANYONE OTHER THAN THE ARCHITECT.

CONCEPTUAL GULFSTREAM HOTEL ANNEX - SECOND FLOOR PLAN

A-14

COPYRIGHT 2016 - JRA, INC.

1 THIRD - FIFTH FLOOR (TYPICAL)
1/8" = 1'-0"

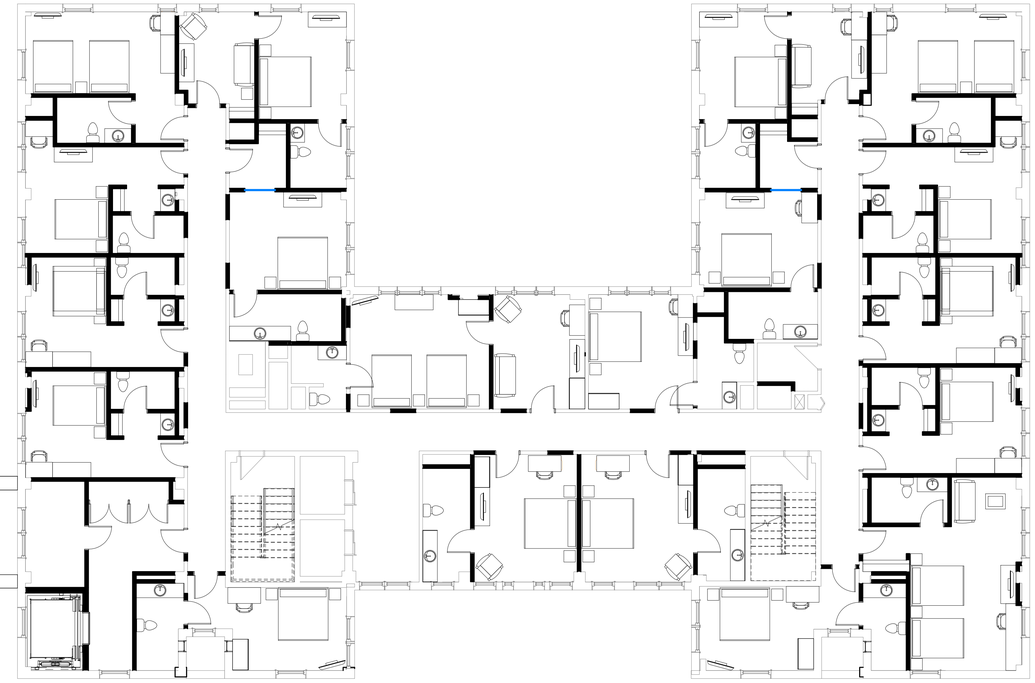

Color Legend - Use

- 1 BEDROOM SUITE - TYPE C
- 1 BEDROOM SUITE - TYPE F
- 2 BEDROOM SUITE
- DBL. QUEEN
- DELUXE DBL QUEEN - TYPE C
- DELUXE DBL. QUEEN - TYPE B
- KING - TYPE B
- KING - TYPE C
- KING - TYPE D
- STANDARD DBL. QUEEN
- STANDARD KING

N

0' 4' 8' 16' 32'

JRA architects
829 E Market Street, Suite B
Louisville, Kentucky 40206
502.583.4697

STATE OF FLORIDA MARK E. TRIER AR97544 REGISTERED ARCHITECT

SITE DEVELOPMENT SUBMITTAL

HISTORIC GULFSTREAM HOTEL
SITE DEVELOPMENT SUBMITTAL
HUDSON HOLDINGS, LLC
LAKE WORTH, FL

PROJECT	2015-19
DATE	12/07/15
DRAWN	AJT
CHECKED	MET

REVISIONS

No.	Description	Date
1	CITY COMMENTS	1/18/16
2	SIGNAGE	1/19/16
3	Additional Comments	1/28/16
4	FINAL REVIEW	2/4/16
5	Revised Design	2/26/16

JRA ARCHITECTS HAS RETAINED AN ELECTRONIC VERSION OF THESE DRAWINGS. THE CLIENT AGREES NOT TO REUSE THESE DRAWINGS - IN ELECTRONIC OR ANY OTHER FORMAT - IN WHOLE, OR IN PART, FOR ANY PURPOSE OTHER THAN FOR THE PROJECT. THE CLIENT AGREES NOT TO TRANSFER THESE ELECTRONIC FILES TO OTHERS WITHOUT THE PRIOR WRITTEN CONSENT OF THE ARCHITECT. THE CLIENT FURTHER AGREES TO WAIVE ALL CLAIMS AGAINST THE ARCHITECT RESULTING IN ANY WAY FROM ANY UNAUTHORIZED CHANGES TO OR REUSE OF THE ELECTRONIC FILES FOR ANY OTHER PROJECT BY ANYONE OTHER THAN THE ARCHITECT.

CONCEPTUAL GULFSTREAM HOTEL ANNEX - 3RD THRU 5TH FLOORS

A-15

COPYRIGHT 2016 - JRA, INC.

C:\Users\atriplett\Documents\201519- GULFSTREAM HOTEL_ANNEX_atriplett.rvt
2/28/2016 12:00:45 PM

C:\Users\stanplett\Documents\201519- GULFSTREAM HOTEL_ANNEX_stanplett.rvt

EXTERIOR BUILDING SIGNAGE
WEST FACADE = 14 S.F. X 2 = 28 S.F.
NORTH FACADE = 16 S.F.
TOTAL SIGNAGE AREA = 44 S.F.

2 EXTERIOR ELEVATION - EAST
1/8" = 1'-0"

1 EXTERIOR ELEVATION - WEST
1/8" = 1'-0"

0' 4' 8' 16' 32'

2/28/2016 1:01:53 PM

JRA architects
829 E Market Street, Suite B
Louisville, Kentucky 40206
502.583.4697

STATE OF FLORIDA
MARK E. THIER
AR97544
REGISTERED ARCHITECT

SITE DEVELOPMENT SUBMITTAL

HISTORIC GULFSTREAM HOTEL
SITE DEVELOPMENT SUBMITTAL
HUDSON HOLDINGS, LLC
LAKE WORTH, FL

ARCHITECTURAL

PROJECT	2015-19
DATE	12/07/15
DRAWN	Author
CHECKED	Checker

REVISIONS

No.	Description	Date
1	CITY COMMENTS	1/18/16
2	SIGNAGE	1/19/16
3	Additional Comments	1/28/16
4	FINAL REVIEW	2/4/16
5	Revised Design	2/26/16

JRA ARCHITECTS HAS RETAINED AN ELECTRONIC VERSION OF THESE DRAWINGS. THE CLIENT AGREES NOT TO REPRODUCE THESE FILES IN ANY FORMAT OR ANY OTHER FORMAT - IN WHOLE, OR IN PART, FOR ANY PURPOSE OTHER THAN FOR THE PROJECT. THE CLIENT AGREES NOT TO TRANSFER THESE ELECTRONIC FILES TO OTHERS WITHOUT THE PRIOR WRITTEN CONSENT OF THE ARCHITECT. THE CLIENT FURTHER AGREES TO HOLD THE ARCHITECT AGAINST THE ARCHITECT REGULTING IN ANY WAY FROM ANY UNAUTHORIZED CHANGES TO OR REUSE OF THE ELECTRONIC FILES FOR ANY OTHER PROJECT BY ANYONE OTHER THAN THE ARCHITECT.

CONCEPTUAL EXTERIOR ELEVATION - EAST/WEST ELEVATIONS

A-16

COPYRIGHT 2016 - JRA, INC.

C:\Users\tatiyana\Documents\2015\19- GULFSTREAM HOTEL_ANNEX_atrplatt.rvt

2 EXTERIOR ELEVATION - SOUTH
1/8" = 1'-0"

1 EXTERIOR ELEVATION - NORTH LAKE AVE
1/8" = 1'-0"

0' 4' 8' 16' 32'

JRA architects
829 E Market Street, Suite B
Louisville, Kentucky 40206
502.583.4697

STATE OF FLORIDA
MARK E. THIER
AR97544
REGISTERED ARCHITECT

SITE DEVELOPMENT SUBMITTAL

HISTORIC GULFSTREAM HOTEL
SITE DEVELOPMENT SUBMITTAL
HUDSON HOLDINGS, LLC
LAKE WORTH, FL

ARCHITECTURAL

PROJECT	2015-19
DATE	12/07/15
DRAWN	TLG
CHECKED	MET

REVISIONS

No.	Description	Date
1	CITY COMMENTS	1/18/16
2	SIGNAGE	1/19/16
3	Additional Comments	1/29/16
4	FINAL REVIEW	2/4/16
5	Revised Design	2/26/16

JRA ARCHITECTS HAS RETAINED AN ELECTRONIC VERSION OF THESE DRAWINGS. THE CLIENT AGREES NOT TO REPRODUCE THESE DRAWINGS IN WHOLE OR ANY OTHER FORMAT - IN WHOLE, OR IN PART, FOR ANY PURPOSE OTHER THAN FOR THE PROJECT. THE CLIENT AGREES NOT TO TRANSFER THESE ELECTRONIC FILES TO OTHERS WITHOUT THE PRIOR WRITTEN CONSENT OF THE ARCHITECT. THE CLIENT AGREES TO HOLD THE ARCHITECT HARMLESS AGAINST THE ARCHITECT RESULTING IN ANY WAY FROM ANY UNAUTHORIZED CHANGES TO OR REUSE OF THE ELECTRONIC FILES FOR ANY OTHER PROJECT BY ANYONE OTHER THAN THE ARCHITECT.

CONCEPTUAL EXTERIOR ELEVATIONS - NORTH/SOUTH ELEVATIONS

A-17

COPYRIGHT 2016 - JRA, INC.

2/28/2016 1:02:42 PM

NOT TO SCALE

EXAMPLE OF ANNEX LIGHTING - PENDANT AND WALL MOUNTED FIXTURES

HARDSCAPE MATERIALS FOR POOL DECK ARE PROPOSED TO BE TRAVERTINE. BELOW ARE EXAMPLES OF THE MATERIAL TO BE USED. FINAL SELECTION WILL BE MADE DURING DESIGN DOCUMENT PHASE

EXAMPLE OF POOL DECK PAVERS AND POOL COPINGS NOT TO SCALE

SCORED GUARDIAN® PAVER

23 1/2"x 35 3/8" shown

THIS SYSTEM IS USED FOR HIGH WIND APPLICATIONS

Hanover's 17 5/8" x 35 3/8" and 23 1/2" x 35 3/8" (scored only) Guardian® Pavers can be produced with a score, giving the appearance of a false joint. The 23 1/2" x 35 3/8" has a score at 11 3/4" and should be used when a smaller piece is required. The 17 5/8" x 35 3/8" is scored at 17 5/8" to appear as two 17 5/8" x 17 5/8" pavers.

TYPICAL ROOF PAVER SYSTEM ASSEMBLY NOT TO SCALE

EXAMPLE OF GREEN ROOF AND ROOF PAVER SYSTEM ASSEMBLIES NOT TO SCALE

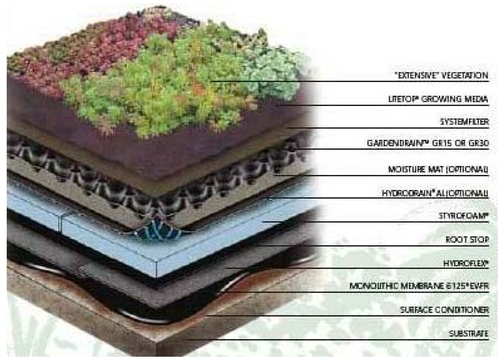

SELECTION OF PLANT MATERIAL WILL BE DONE AT TIME OF FINAL SYSTEM AND MANUFACTURER SELECTION.

TYPICAL GREEN ROOF SYSTEM ASSEMBLY NOT TO SCALE

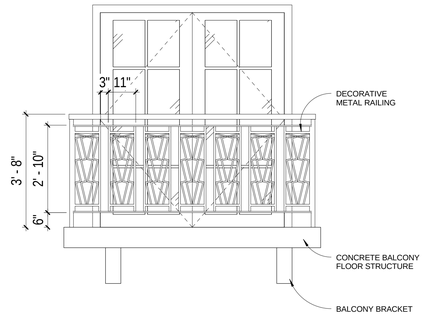

3 **METAL RAILING DETAIL**
1/2" = 1'-0"

NOTE: FOOTINGS AND REINFORCING TO BE DESIGNED TO MEET LOCAL BUILDING CODES.

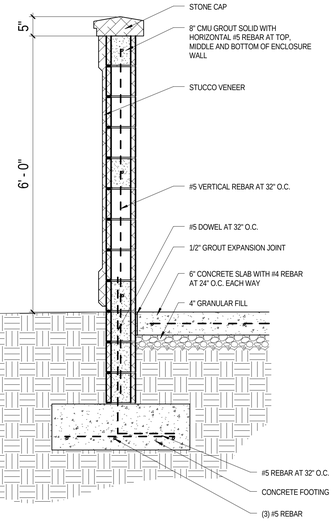

4 **TRASH OR DUMPSTER ENCLOSURE DETAIL**
3/4" = 1'-0"

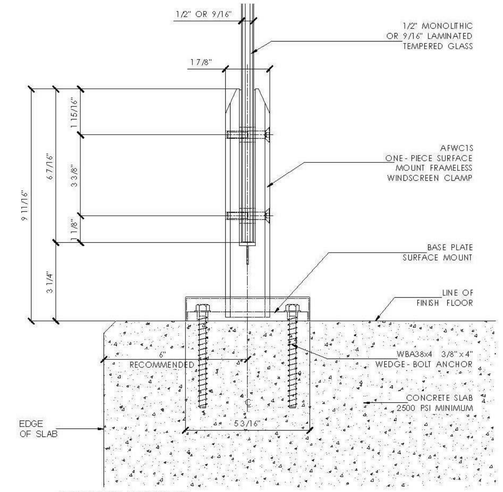

CONCRETE SUBSTRATE
TYPICAL SURFACE MOUNT DETAIL NOT TO SCALE

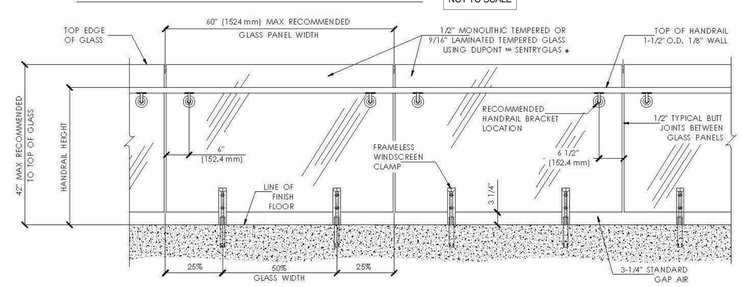

THE FRAMELESS CLAMPS MAY BE USED FOR FALL PROTECTION IN SINGLE FAMILY RESIDENTIAL OCCUPANCIES WHEN LIMITED TO 42" HEIGHT, PANEL LENGTH OF 5 FEET AND INSTALLED WITH A TOP RAIL CAPABLE OF SPANNING 10 FEET FOR THESE CONDITIONS THE SYSTEM WILL SUPPORT THE ABOVE STATED LOADS OR A 200 lb CONCENTRATED LOAD ON THE TOP RAIL VERTICALLY OR HORIZONTALLY WITH A FACTOR OF SAFETY OF 4.0 AGAINST GLASS FAILURE.

FRAMELESS GLASS CLAMP RAILING SYSTEM
TYPICAL FRAMELESS GLASS CLAMP RAILING SYSTEM ELEVATION

TYPICAL CLAMP ATTACHMENTS NOT TO SCALE

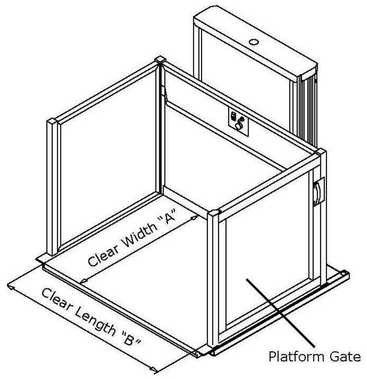

90° Platform

EXAMPLE OF PROPOSED PLATFORM LIFT FOR FRONT ENTRY OF HISTORIC HOTEL. NOT TO SCALE

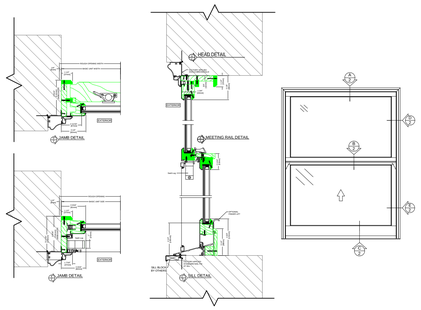

2 **WINDOW DETAILS**
1 1/2" = 1'-0"

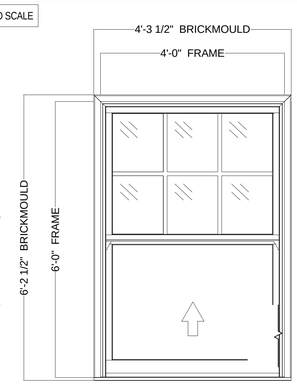

1 **TYPICAL WINDOW ELEVATION**
3/4" = 1'-0"

JRA architects
829 E Market Street, Suite B
Louisville, Kentucky 40206
502.583.4697

STATE OF FLORIDA MARK E. THIER AR97544 REGISTERED ARCHITECT

SITE DEVELOPMENT SUBMITTAL

HISTORIC GULFSTREAM HOTEL
SITE DEVELOPMENT SUBMITTAL
HUDSON HOLDINGS, LLC
LAKE WORTH, FL

ARCHITECTURAL

PROJECT	2015-19
DATE	12/07/2015
DRAWN	AJT, TLG
CHECKED	MET

REVISIONS

No.	Description	Date
1	CITY COMMENTS	1/18/16
2	SIGNAGE	1/19/16
3	Additional Comments	1/28/16
4	FINAL REVIEW	2/4/16

JRA ARCHITECTS HAS RETAINED AN ELECTRONIC VERSION OF THESE DRAWINGS. THE CLIENT AGREES NOT TO REUSE THESE DRAWINGS - IN ELECTRONIC OR ANY OTHER FORMAT - IN WHOLE, OR IN PART, FOR ANY PURPOSE OTHER THAN FOR THE PROJECT. THE CLIENT AGREES NOT TO TRANSFER THESE ELECTRONIC FILES TO OTHERS WITHOUT THE PRIOR WRITTEN CONSENT OF JRA ARCHITECTS. THE CLIENT FURTHER AGREES TO WAIVE ALL CLAIMS AGAINST THE ARCHITECT RESULTING IN ANY WAY FROM ANY UNAUTHORIZED CHANGES TO OR REUSE OF THE ELECTRONIC FILES FOR ANY OTHER PROJECT BY ANYONE OTHER THAN THE ARCHITECT.

DETAILS

A-18

COPYRIGHT 2016 - JRA, INC.

C:\Users\ajtriplett\Documents\2015\15- GULFSTREAM HOTEL_CENTRAL_ajtriplett.rvt
2/8/2016 3:23:13 PM

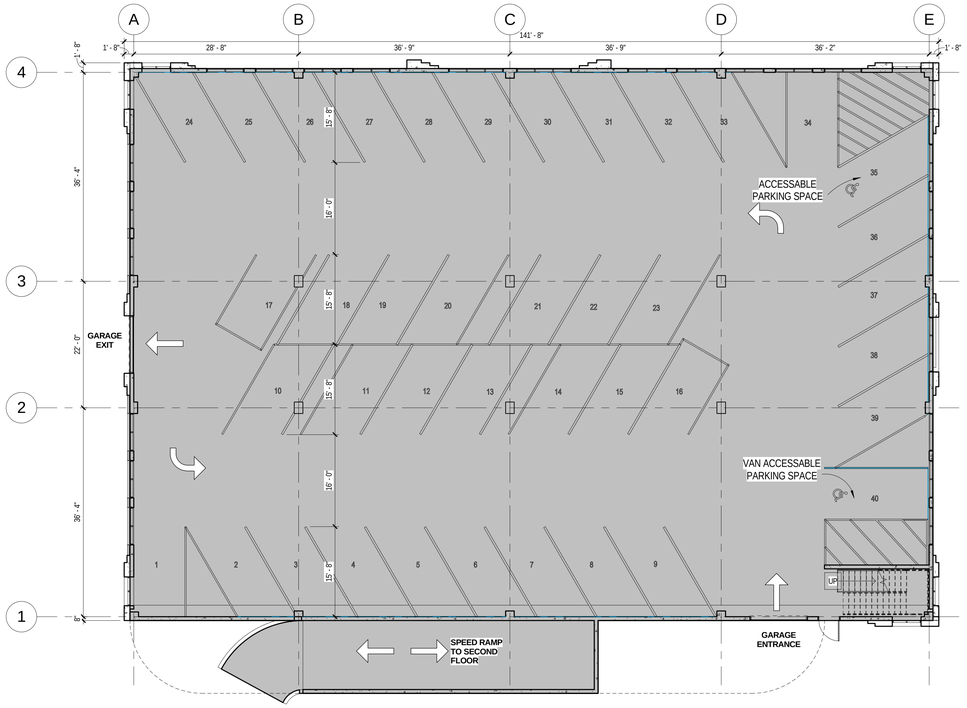

1 GROUND FLOOR PLAN
3/32" = 1'-0"

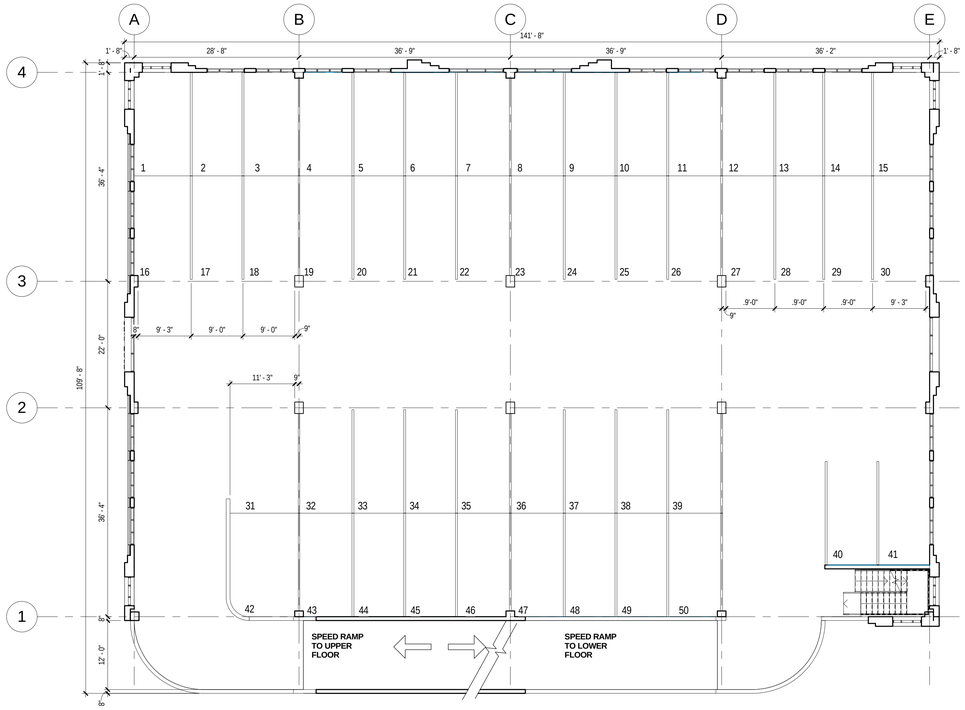

2 SECOND & THIRD FLOOR PLANS
3/32" = 1'-0"

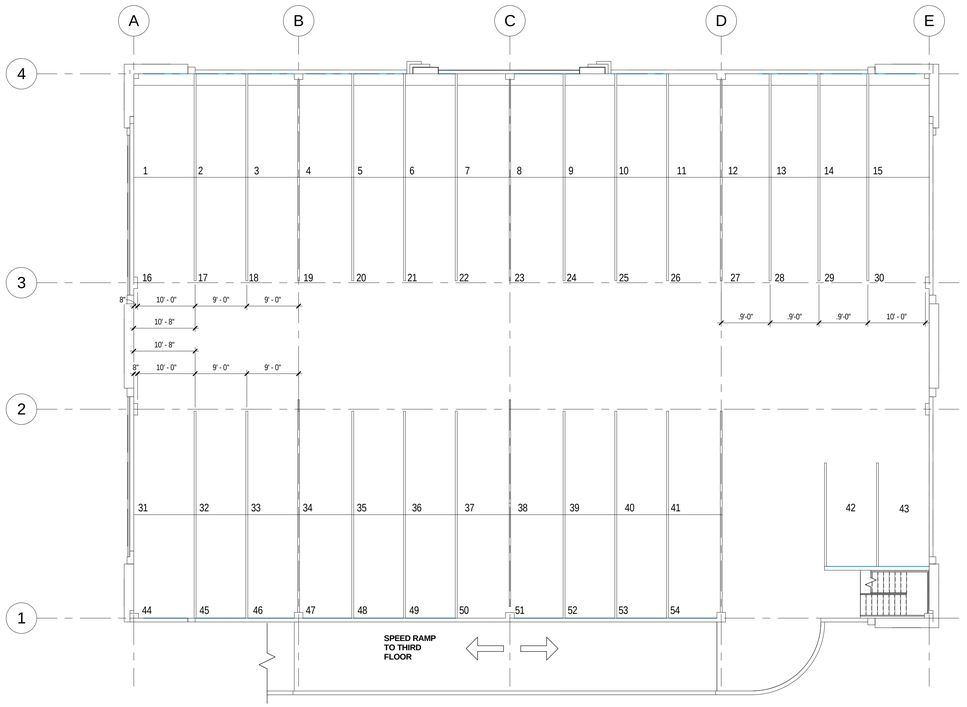

3 ROOFTOP PARKING PLAN
3/32" = 1'-0"

FIRST FLOOR	40 SPACES
SECOND FLOOR	50 SPACES
THIRD FLOOR	50 SPACES
ROOF LEVEL	54 SPACES
TOTAL:	**194 SPACES**

N

0' 5.4' 10.8' 21.6' 43.2'

JRA architects
829 E Market Street, Suite B
Louisville, Kentucky 40206
502.583.4697

STATE OF FLORIDA MARK E. TRIER AR97544 REGISTERED ARCHITECT

SITE DEVELOPMENT SUBMITTAL

HISTORIC GULFSTREAM HOTEL
SITE DEVELOPMENT SUBMITTAL
OWNER NAME
SOMEWHERE, KENTUCKY

PROJECT	2015-19
DATE	12/07/15
DRAWN	AJT
CHECKED	MET

REVISIONS

No.	Description	Date
1	CITY COMMENTS	1/18/16
2	SIGNAGE	1/19/16
3	Additional Comments	1/28/16
4	FINAL REVIEW	2/4/16
5	Revised Design	2/26/16

JRA ARCHITECTS HAS RETAINED AN ELECTRONIC VERSION OF THESE DRAWINGS. THE CLIENT AGREES NOT TO REUSE THESE DRAWINGS - IN ELECTRONIC OR ANY OTHER FORMAT - IN WHOLE, OR IN PART, FOR ANY PURPOSE OTHER THAN FOR THE PROJECT. THE CLIENT AGREES NOT TO TRANSFER THESE ELECTRONIC FILES TO OTHERS WITHOUT THE PRIOR WRITTEN CONSENT OF THE ARCHITECT. THE CLIENT FURTHER AGREES TO WAIVE ALL CLAIMS AGAINST THE ARCHITECT RESULTING IN ANY WAY FROM ANY UNAUTHORIZED CHANGES TO OR REUSE OF THE ELECTRONIC FILES FOR ANY OTHER PROJECT BY ANYONE OTHER THAN THE ARCHITECT.

GULFSTREAM PARKING STRUCTURE FLOOR PLANS

A-19

COPYRIGHT 2016 - JRA, INC.

C:\Users\tgravis.JRARCHITECTS\Documents\201519- GULFSTREAM HOTEL_PARKING GARAGE_tgravis.rvt
2/26/2016 4:39:57 PM

1 NORTH EXTERIOR ELEVATION
1/8" = 1'-0"

4 SOUTH EXTERIOR ELEVATION
1/8" = 1'-0"

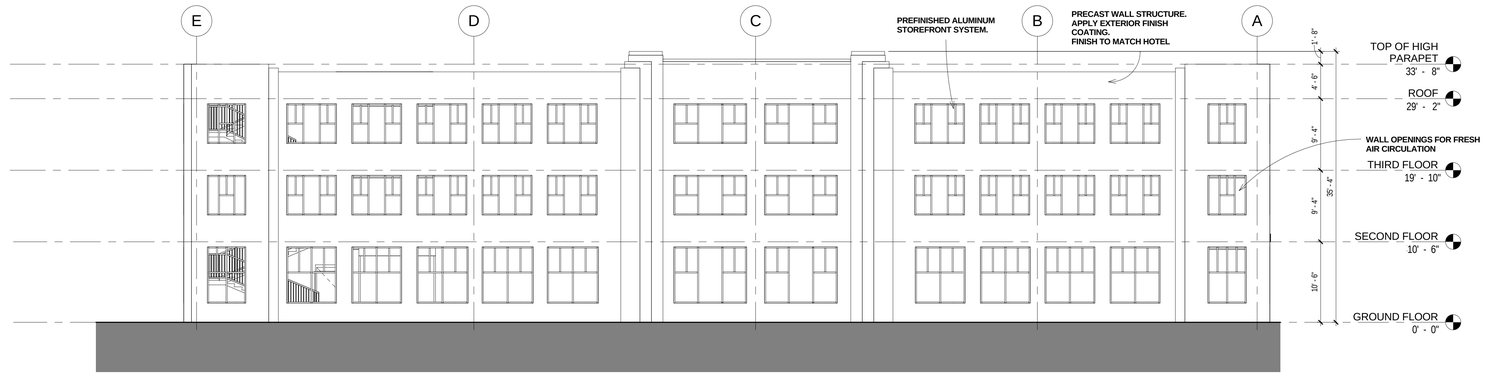

2 WEST EXTERIOR ELEVATION
1/8" = 1'-0"

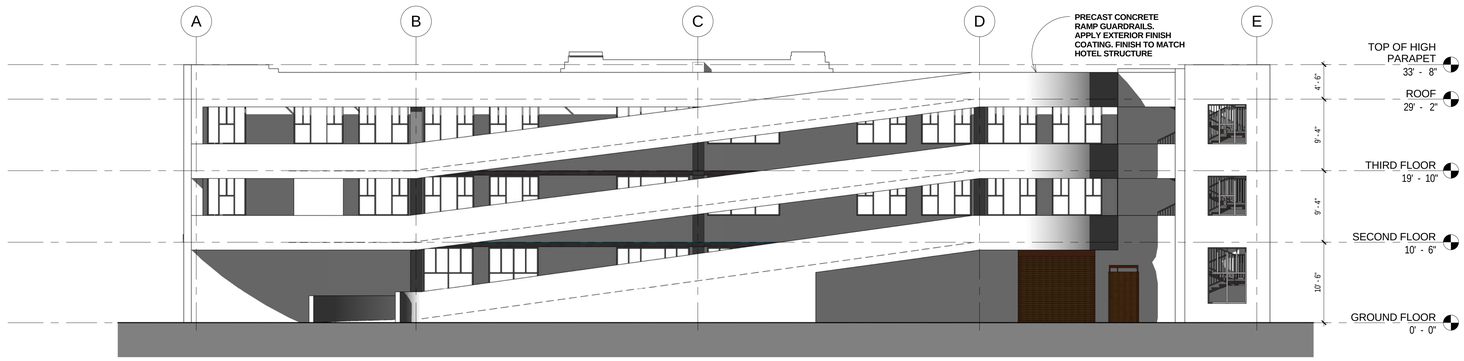

3 EAST EXTERIOR ELEVATION
1/8" = 1'-0"

EXTERIOR BUILDING SIGNAGE
WEST FACADE = 24 S.F.
SOUTH FACADE = 8 S.F.
TOTAL SIGNAGE AREA = 32 S.F.

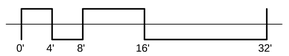

JRA architects
829 E Market Street, Suite B
Louisville, Kentucky 40206
502.583.4697

STATE OF FLORIDA
MARK E. THIER
AR97544
REGISTERED ARCHITECT

SITE DEVELOPMENT SUBMITTAL

HISTORIC GULFSTREAM HOTEL
SITE DEVELOPMENT SUBMITTAL
OWNER NAME
SOMEWHERE, KENTUCKY

ARCHITECTURAL

PROJECT	2015-19
DATE	12/07/15
DRAWN	AJT
CHECKED	MET

REVISIONS

No.	Description	Date
1	CITY COMMENTS	1/18/16
2	SIGNAGE	1/19/16
3	Additional Comments	1/28/16
4	FINAL REVIEW	2/4/16
5	Revised Design	2/26/16

JRA ARCHITECTS HAS RETAINED AN OWNERSHIP INTEREST IN THESE DRAWINGS. THE CLIENT AGREES NOT TO REUSE THESE DRAWINGS - IN ELECTRONIC OR ANY OTHER FORMAT - IN WHOLE, OR IN PART, FOR ANY PURPOSE OTHER THAN FOR THIS PROJECT. THE CLIENT AGREES NOT TO TRANSMIT THE ELECTRONIC FILE TO OTHERS WITHOUT THE WRITTEN CONSENT OF THE ARCHITECT. THE CLIENT FURTHER AGREES TO WAIVE ALL CLAIMS AGAINST THE ARCHITECT RESULTING IN ANY WAY FROM ANY UNAUTHORIZED CHANGES TO OR REUSE OF THE ELECTRONIC FILES FOR ANY OTHER PROJECT BY ANYONE OTHER THAN THE ARCHITECT.

GULFSTREAM PARKING STRUCTURE EXTERIOR ELEVATIONS

A-20

COPYRIGHT 2016 - JRA, INC.

C:\Users\tgraves.JRARCHITECTS\Documents\2015\19_GULFSTREAM HOTEL_PARKING GARAGE_tgraves.rvt

2/26/2016 4:41:12 PM

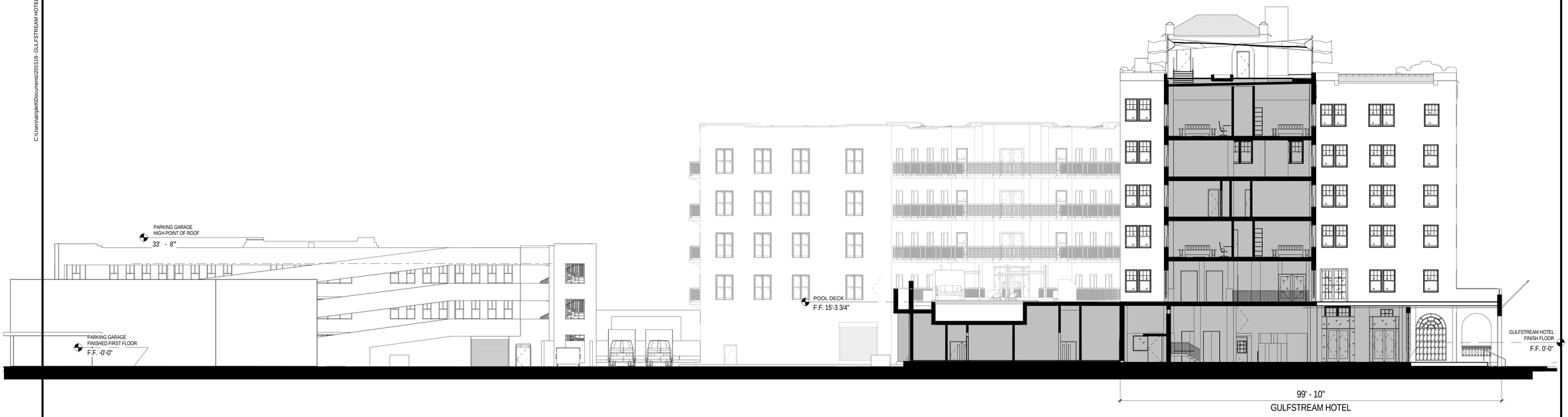

1 **GULFSTREAM HOTEL TERRACE SECTION**
3/32" = 1'-0"

0' 5.4' 10.8' 21.6' 43.2'

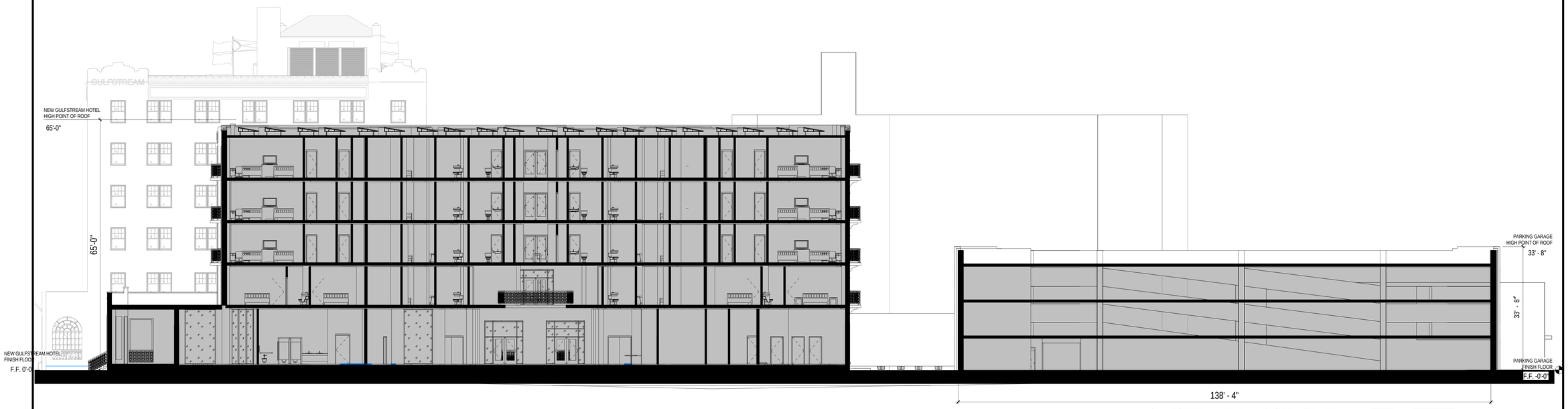

0' 5.4' 10.8' 21.6' 43.2'

2 **NEW GULFSTREAM HOTEL AND PARKING GARAGE**
3/32" = 1'-0"

JRA architects
829 E Market Street, Suite B
Louisville, Kentucky 40206
502.583.4697

STATE OF FLORIDA
MARK E. TRIER
AR97544
REGISTERED ARCHITECT

SITE DEVELOPMENT SUBMITTAL

HISTORIC GULFSTREAM HOTEL

HUDSON HOLDINGS, LLC
LAKE WORTH, FL

ARCHITECTURAL

PROJECT	2015-19
DATE	2/17/2016
DRAWN	TLG-AJT
CHECKED	MET

REVISIONS

No.	Description	Date
1	CITY COMMENTS	1/18/16
2	SIGNAGE	1/19/16
3	Additional Comments	1/28/16
4	FINAL REVIEW	2/4/16
5	Revised Design	2/26/16

JRA ARCHITECTS HAS RETAINED AN ELECTRONIC VERSION OF THESE DRAWINGS. THE CLIENT AGREES NOT TO REUSE THESE DRAWINGS - IN ELECTRONIC OR ANY OTHER FORMAT - IN WHOLE, OR IN PART, FOR ANY PURPOSE OTHER THAN FOR THE PROJECT. THE CLIENT AGREES NOT TO TRANSFER THESE ELECTRONIC FILES TO OTHERS WITHOUT THE PRIOR WRITTEN CONSENT OF THE ARCHITECT. THE CLIENT FURTHER AGREES TO WAIVE ALL CLAIMS AGAINST THE ARCHITECT RESULTING IN ANY WAY FROM ANY UNAUTHORIZED CHANGES TO OR REUSE OF THE ELECTRONIC FILES FOR ANY OTHER PROJECT BY ANYONE OTHER THAN THE ARCHITECT.

GULFSTREAM BUILDING SECTIONS

A-21

COPYRIGHT 2016 - JRA, INC.

C:\Users\atriplett\Documents\201519- GULFSTREAM HOTEL_CENTRAL_atriplett.rvt

3/1/2016 11:28:38 AM

1 **NEW GULFSTREAM HOTEL AND TERRACE SECTION**
1/8" = 1'-0"

0' 4' 8' 16' 32'

JRA architects
829 E Market Street, Suite B
Louisville, Kentucky 40206
502.583.4697

STATE OF FLORIDA
MARK E. TRIER
AR97544
REGISTERED ARCHITECT

SITE DEVELOPMENT SUBMITTAL

HISTORIC GULFSTREAM HOTEL

HUDSON HOLDINGS, LLC
LAKE WORTH, FL

ARCHITECTURAL

PROJECT	2015-19
DATE	2/17/2016
DRAWN	TLG-AJT
CHECKED	MET

REVISIONS

No.	Description	Date
1	CITY COMMENTS	1/18/16
2	SIGNAGE	1/19/16
3	Additional Comments	1/28/16
4	FINAL REVIEW	2/4/16
5	Revised Design	2/26/16

JRA ARCHITECTS HAS RETAINED AN ELECTRONIC VERSION OF THESE DRAWINGS. THE CLIENT AGREES NOT TO REUSE THESE DRAWINGS - IN ELECTRONIC OR ANY OTHER FORMAT - IN WHOLE, OR IN PART, FOR ANY PURPOSE OTHER THAN FOR THE PROJECT. THE CLIENT AGREES NOT TO TRANSFER THESE ELECTRONIC FILES TO OTHERS WITHOUT THE PRIOR WRITTEN CONSENT OF THE ARCHITECT. THE CLIENT FURTHER AGREES TO WAIVE ALL CLAIMS AGAINST THE ARCHITECT RESULTING IN ANY WAY FROM ANY UNAUTHORIZED CHANGES TO OR REUSE OF THE ELECTRONIC FILES FOR ANY OTHER PROJECT BY ANYONE OTHER THAN THE ARCHITECT.

GULFSTREAM BUILDING SECTION

A-22

COPYRIGHT 2016 - JRA, INC.

C:\Users\atriplett\Documents\201519- GULFSTREAM HOTEL_CENTRAL_atriplett.rvt

3/1/2016 11:22:33 AM

1 HISTORIC GULFSTREAM HOTEL PERSPECTIVE

JRA architects
829 E Market Street, Suite B
Louisville, Kentucky 40206
502.583.4697

STATE OF FLORIDA
MARK E. TRIER
AR97544
REGISTERED ARCHITECT

SITE DEVELOPMENT SUBMITTAL

HISTORIC GULFSTREAM HOTEL

HUDSON HOLDINGS, LLC
LAKE WORTH, FL

PROJECT	2015-19
DATE	2/17/2016
DRAWN	TLG
CHECKED	MET

REVISIONS

No.	Description	Date
1	CITY COMMENTS	1/18/16
2	SIGNAGE	1/19/16
3	Additional Comments	1/28/16
4	FINAL REVIEW	2/4/16
5	Revised Design	2/26/16

JRA ARCHITECTS HAS RETAINED AN ELECTRONIC VERSION OF THESE DRAWINGS. THE CLIENT AGREES NOT TO REUSE THESE DRAWINGS - IN ELECTRONIC OR ANY OTHER FORMAT - IN WHOLE, OR IN PART, FOR ANY PURPOSE OTHER THAN FOR THE PROJECT. THE CLIENT AGREES NOT TO TRANSFER THESE ELECTRONIC FILES TO OTHERS WITHOUT THE PRIOR WRITTEN CONSENT OF THE ARCHITECT. THE CLIENT FURTHER AGREES TO WAIVE ALL CLAIMS AGAINST THE ARCHITECT RESULTING IN ANY WAY FROM ANY UNAUTHORIZED CHANGES TO OR REUSE OF THE ELECTRONIC FILES FOR ANY OTHER PROJECT BY ANYONE OTHER THAN THE ARCHITECT.

HISTORIC GULFSTREAM HOTEL CONCEPTUAL PERSEPECTIVE

A-23

COPYRIGHT 2016 - JRA, INC.

C:\Users\tgraviss.JRARCHITECTS\Documents\201519- GULFSTREAM HOTEL_CENTRAL_tgraviss.rvt
2/28/2016 11:40:18 AM

1 LAKE AVE PERSPECTIVE

JRA architects
829 E Market Street, Suite B
Louisville, Kentucky 40206
502.583.4697

STATE OF FLORIDA
MARK E. TRIER
AR97544
REGISTERED ARCHITECT

SITE DEVELOPMENT SUBMITTAL

HISTORIC GULFSTREAM HOTEL

HUDSON HOLDINGS, LLC
LAKE WORTH, FL

ARCHITECTURAL

PROJECT	2015-19
DATE	2/17/2016
DRAWN	TLG
CHECKED	MET

REVISIONS

No.	Description	Date
1	CITY COMMENTS	1/18/16
2	SIGNAGE	1/19/16
3	Additional Comments	1/28/16
4	FINAL REVIEW	2/4/16
5	Revised Design	2/26/16

JRA ARCHITECTS HAS RETAINED AN ELECTRONIC VERSION OF THESE DRAWINGS. THE CLIENT AGREES NOT TO REUSE THESE DRAWINGS - IN ELECTRONIC OR ANY OTHER FORMAT - IN WHOLE, OR IN PART, FOR ANY PURPOSE OTHER THAN FOR THE PROJECT. THE CLIENT AGREES NOT TO TRANSFER THESE ELECTRONIC FILES TO OTHERS WITHOUT THE PRIOR WRITTEN CONSENT OF THE ARCHITECT. THE CLIENT FURTHER AGREES TO WAIVE ALL CLAIMS AGAINST THE ARCHITECT RESULTING IN ANY WAY FROM ANY UNAUTHORIZED CHANGES TO OR REUSE OF THE ELECTRONIC FILES FOR ANY OTHER PROJECT BY ANYONE OTHER THAN THE ARCHITECT.

HISTORIC GULFSTREAM HOTEL CONCEPTUAL PERSPECTIVE

A-24

COPYRIGHT 2016 - JRA, INC.

C:\Users\tgraviss.JRARCHITECTS\Documents\201519- GULFSTREAM HOTEL_CENTRAL_tgraviss.rvt
2/28/2016 11:37:13 AM

1 SOUTH LAKESIDE DRIVE PERSPECTIVE - GULFSTREAM ANNEX AND PARKING STRUCTURE VIEW

JRA architects
829 E Market Street, Suite B
Louisville, Kentucky 40206
502.583.4697

STATE OF FLORIDA
MARK E. TRIER
AR97544
REGISTERED ARCHITECT

SITE DEVELOPMENT SUBMITTAL

HISTORIC GULFSTREAM HOTEL

HUDSON HOLDINGS, LLC
LAKE WORTH, FL

PROJECT	2015-19
DATE	2/17/2016
DRAWN	TLG-AJT
CHECKED	MET

REVISIONS

No.	Description	Date
1	CITY COMMENTS	1/18/16
2	SIGNAGE	1/19/16
3	Additional Comments	1/28/16
4	FINAL REVIEW	2/4/16
5	Revised Design	2/26/16

JRA ARCHITECTS HAS RETAINED AN ELECTRONIC VERSION OF THESE DRAWINGS. THE CLIENT AGREES NOT TO REUSE THESE DRAWINGS - IN ELECTRONIC OR ANY OTHER FORMAT - IN WHOLE, OR IN PART, FOR ANY PURPOSE OTHER THAN FOR THE PROJECT. THE CLIENT AGREES NOT TO TRANSFER THESE ELECTRONIC FILES TO OTHERS WITHOUT THE PRIOR WRITTEN CONSENT OF THE ARCHITECT. THE CLIENT FURTHER AGREES TO WAIVE ALL CLAIMS AGAINST THE ARCHITECT RESULTING IN ANY WAY FROM ANY UNAUTHORIZED CHANGES TO OR REUSE OF THE ELECTRONIC FILES FOR ANY OTHER PROJECT BY ANYONE OTHER THAN THE ARCHITECT.

CONCEPTUAL PERSPECTIVE

A-25

COPYRIGHT 2016 - JRA, INC.

C:\Users\tgraviss.JRARCHITECTS\Documents\201519- GULFSTREAM HOTEL_CENTRAL_tgraviss.rvt

2/28/2016 11:33:42 AM

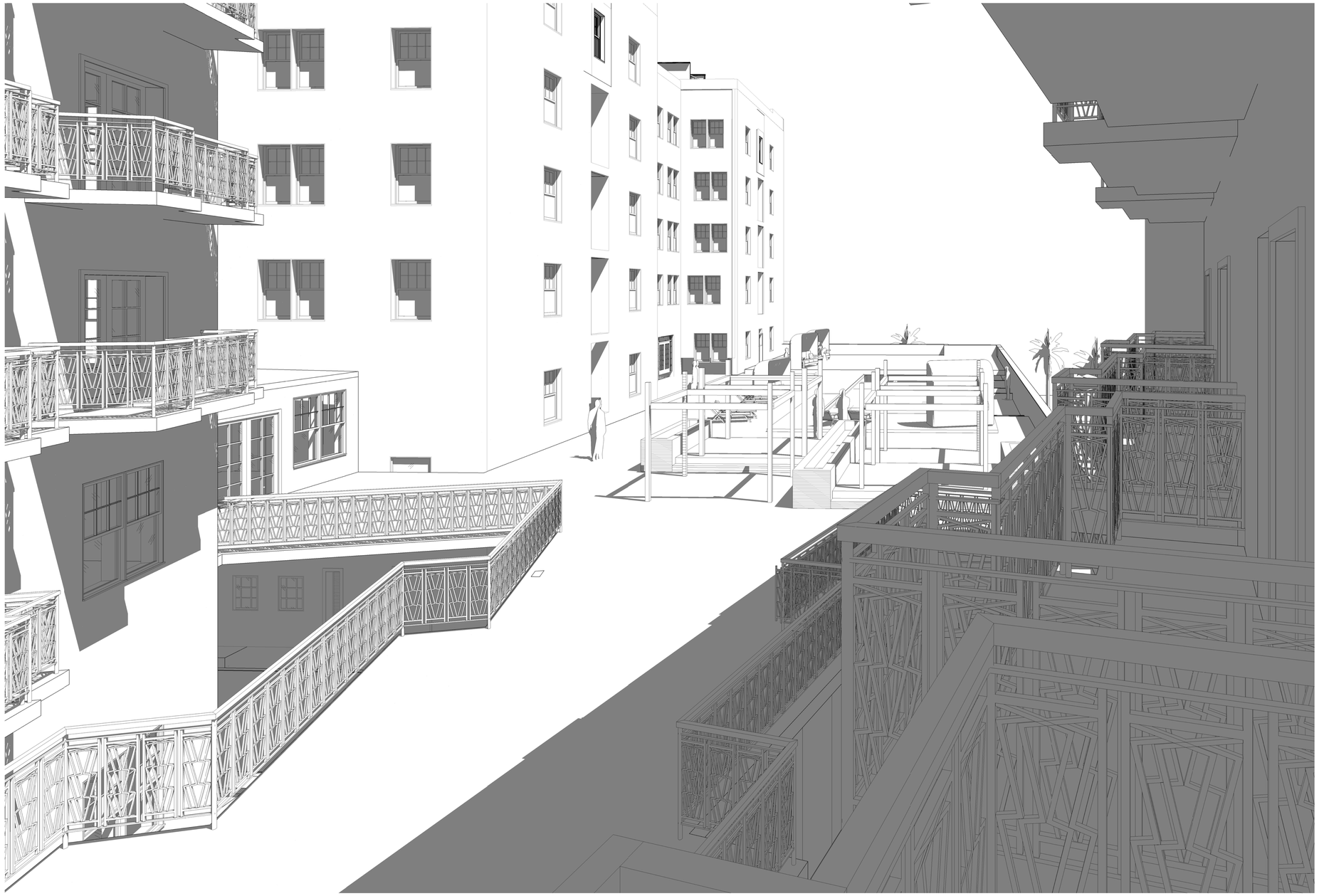

1 HISTORIC GULFSTREAM HOTEL AND ANNEX TERRACE PERSPECTIVE

JRA architects
829 E Market Street, Suite B
Louisville, Kentucky 40206
502.583.4697

STATE OF FLORIDA
MARK E. TRIER
AR97544
REGISTERED ARCHITECT

SITE DEVELOPMENT SUBMITTAL

HISTORIC GULFSTREAM HOTEL
SITE DEVELOPMENT SUBMITTAL
HUDSON HOLDINGS, LLC
LAKE WORTH, FL

ARCHITECTURAL

PROJECT	2015-19
DATE	12/07/2015
DRAWN	AJT
CHECKED	MET

REVISIONS

No.	Description	Date
1	CITY COMMENTS	1/18/16
2	SIGNAGE	1/19/16
3	Additional Comments	1/28/16
4	FINAL REVIEW	2/4/16

JRA ARCHITECTS HAS RETAINED AN ELECTRONIC VERSION OF THESE DRAWINGS. THE CLIENT AGREES NOT TO REUSE THESE DRAWINGS - IN ELECTRONIC OR ANY OTHER FORMAT - IN WHOLE, OR IN PART, FOR ANY PURPOSE OTHER THAN FOR THE PROJECT. THE CLIENT AGREES NOT TO TRANSFER THESE ELECTRONIC FILES TO OTHERS WITHOUT THE PRIOR WRITTEN CONSENT OF THE ARCHITECT. THE CLIENT FURTHER AGREES TO WAIVE ALL CLAIMS AGAINST THE ARCHITECT RESULTING IN ANY WAY FROM ANY UNAUTHORIZED CHANGES TO OR REUSE OF THE ELECTRONIC FILES FOR ANY OTHER PROJECT BY ANYONE OTHER THAN THE ARCHITECT.

CONCEPTUAL PERSPECTIVE

A-26

COPYRIGHT 2016 - JRA, INC.

C:\Users\atriplett\Documents\201519- GULFSTREAM HOTEL_CENTRAL_atriplett.rvt
2/9/2016 1:48:01 PM

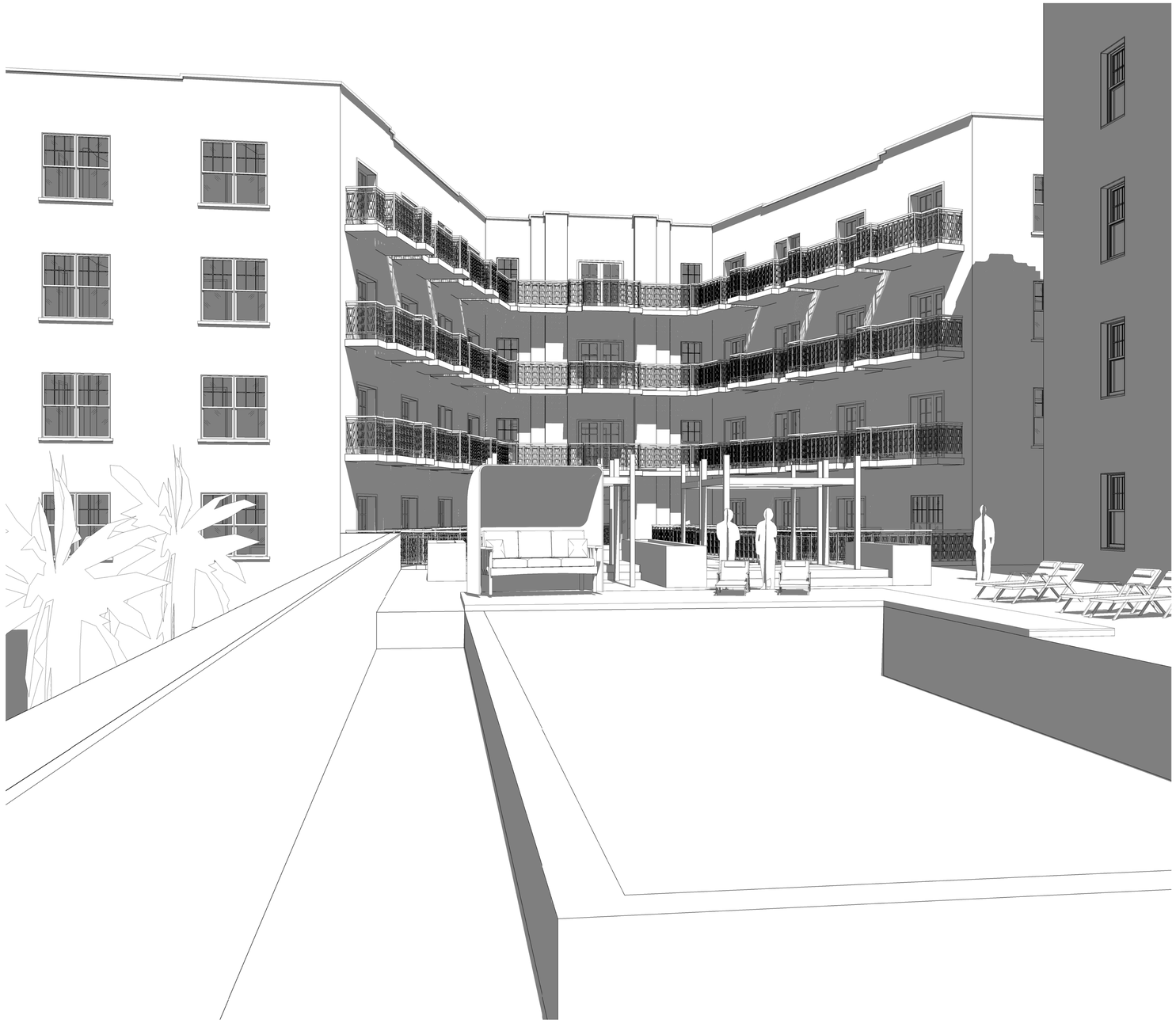

1 HISTORIC GULFSTREAM HOTEL AND ANNEX CONCEPTUAL PERSPECTIVE

JRA architects
829 E Market Street, Suite B
Louisville, Kentucky 40206
502.583.4697

STATE OF FLORIDA
MARK E. TRIER
AR97544
REGISTERED ARCHITECT

SITE DEVELOPMENT SUBMITTAL

HISTORIC GULFSTREAM HOTEL
SITE DEVELOPMENT SUBMITTAL
HUDSON HOLDINGS, LLC
LAKE WORTH, FL

PROJECT	2015-19
DATE	12/07/2015
DRAWN	TLG-AJT
CHECKED	MET

REVISIONS

No.	Description	Date
1	CITY COMMENTS	1/18/16
2	SIGNAGE	1/19/16
3	Additional Comments	1/28/16
4	FINAL REVIEW	2/4/16

JRA ARCHITECTS HAS RETAINED AN ELECTRONIC VERSION OF THESE DRAWINGS. THE CLIENT AGREES NOT TO REUSE THESE DRAWINGS - IN ELECTRONIC OR ANY OTHER FORMAT - IN WHOLE, OR IN PART, FOR ANY PURPOSE OTHER THAN FOR THE PROJECT. THE CLIENT AGREES NOT TO TRANSFER THESE ELECTRONIC FILES TO OTHERS WITHOUT THE PRIOR WRITTEN CONSENT OF THE ARCHITECT. THE CLIENT FURTHER AGREES TO WAIVE ALL CLAIMS AGAINST THE ARCHITECT RESULTING IN ANY WAY FROM ANY UNAUTHORIZED CHANGES TO OR REUSE OF THE ELECTRONIC FILES FOR ANY OTHER PROJECT BY ANYONE OTHER THAN THE ARCHITECT.

CONCEPTUAL PERSPECTIVE

A-27

COPYRIGHT 2016 - JRA, INC.

C:\Users\atriplett\Documents\201519- GULFSTREAM HOTEL_CENTRAL_atriplett.rvt
2/4/2016 11:37:22 AM

4 **SOUTH GOLFVIEW ROAD STREETSCAPE**
1/16" = 1'-0"

0' 8' 16' 32' 64'

3 **FIRST AVE STREETSCAPE**
1/16" = 1'-0"

0' 8' 16' 32' 64'

2 **LAKE AVE. STREETSCAPE**
1/16" = 1'-0"

0' 8' 16' 32' 64'

1 **S. LAKESIDE DR. STREETSCAPE**
1/16" = 1'-0"

JRA architects
829 E Market Street, Suite B
Louisville, Kentucky 40206
502.583.4697

STATE OF FLORIDA
MARK E. THIER
AR97544
REGISTERED ARCHITECT

SITE DEVELOPMENT SUBMITTAL

HISTORIC GULFSTREAM HOTEL
HUDSON HOLDINGS, LLC
LAKE WORTH, FL

ARCHITECTURAL

PROJECT	2015-19
DATE	2/17/2016
DRAWN	TLG-AJT
CHECKED	MET

REVISIONS

No.	Description	Date
1	CITY COMMENTS	1/18/16
2	SIGNAGE	1/19/16
3	Additional Comments	1/28/16
4	FINAL REVIEW	2/4/16
5	Revised Design	2/26/16

JRA ARCHITECTS HAS RETAINED AN ELECTRONIC VERSION OF THESE DRAWINGS. THE CLIENT AGREES NOT TO REUSE THESE DRAWINGS - IN ELECTRONIC OR ANY OTHER FORMAT - IN WHOLE, OR IN PART, FOR ANY PURPOSE OTHER THAN THE PROJECT. THE CLIENT AGREES NOT TO TRANSFER THESE ELECTRONIC FILES TO OTHERS WITHOUT THE PRIOR WRITTEN CONSENT OF THE ARCHITECT. THE CLIENT FURTHER AGREES TO WAIVE ALL CLAIMS AGAINST THE ARCHITECT RESULTING IN ANY WAY FROM ANY CHANGES MADE OVER TIME TO OR REUSE OF THE ELECTRONIC FILES FOR ANY OTHER PROJECT BY ANYONE OTHER THAN THE ARCHITECT.

STREETSCAPE ELEVATIONS

A-28

COPYRIGHT 2016 - JRA, INC.

C:\Users\atriplett\Documents\2015\15- GULFSTREAM HOTEL_CENTRAL_atriplett.rvt
3/1/2016 11:19:15 AM

C:\Users\skirpiet\Documents\201519- GULFSTREAM HOTEL_CENTRAL_skirpiet.rvt

POLE MOUNTED SITE LIGHTING NOTE:
THE PHOTOMETRIC CALCULATIONS FOR THE POLE MOUNTED FIXTURES (TYPE G) ARE BASED UPON UTILIZING THE CITY'S PREFERRED FIXTURE TYPE (THE GREEN COBRA LED STREET LIGHT) BUT UTILIZING THE LOWEST QUANTITY OF LED'S TO REDUCE THE AMOUNT OF LIGHT SPILL OVER THE PROPERTY LINES. WE HAVE BASED OUR CALCULATIONS ON THE LEOTEK MODEL # GC1-20F-MV-27-2-GY-530.

LUMINAIRE SCHEDULE

Symbol	Label	Qty	Catalog Number	Description	Lamp	File	Lumens	LLF	Watts
	A	7	DSXW1 LED 10C 1000 30K T2S MVOLT	DSXW1 LED WITH (1) 10 LED LIGHT ENGINES, TYPE T2S OPTIC, 3000K, @ 1000mA.	LED	DSXW1_LED_10C_1000_30K_T2S_MVOLT.ies	Absolute	1.00	38.8
	B	24	REAL6 D6MW ESL 1000L 30K .60SC	6" REALITY LED RECESSED DOWNLIGHT, 1000 LUMENS, 3000K CCT, 0.60 SPACING CRITERIA	LED	REAL6_D6MW_ESL_1000L_30K_60SC.ies	Absolute	1.00	11
	F	20	6698LED	LED WALL LUMINAIRE ONE MODULE WITH ONE 3000K LED ARRAY, CLEAR GLASS LENS WITH ALUMINUM REFLECTOR		6698LED.IES	Absolute	1.00	20.45
	G	6	GC1-20F-MV-27-2-GY-530	25-1/2"L X 14-1/8"W X 6-1/2"H, LED LUMINAIRE SCALED FROM L03141602 GC1-20F-MV-27-2-GY-530 LEDs WITH OPTICS		GC1-20F-MV-NW-2-GY-530 S.IES	Absolute	1.00	35

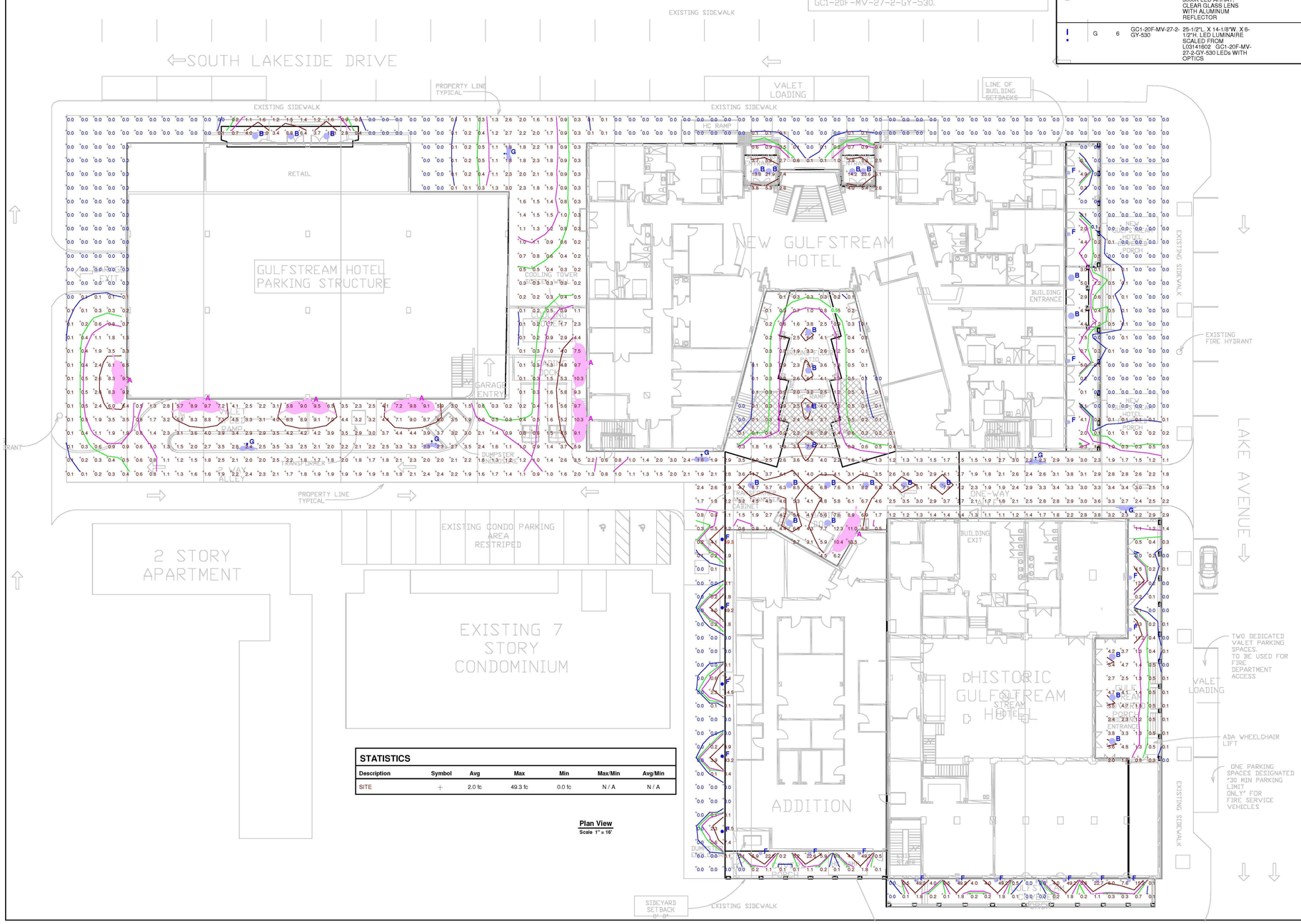

STATISTICS

Description	Symbol	Avg	Max	Min	Max/Min	Avg/Min
SITE	+	2.0 fc	49.3 fc	0.0 fc	N / A	N / A

Plan View
Scale 1" = 16'

CONCEPTUAL SITE DEVELOPMENT PLAN - GROUND LEVEL LIGHTING STUDY

THIS LIGHTING STUDY WAS PERFORMED BASED UPON THE CONCEPTUAL DESIGN PLANS CONTAINED WITHIN THIS SUBMITTAL. FINAL LIGHTING ANALYSIS WILL BE DONE UPON FINAL APPROVED BUILDING DESIGN

VISUAL

Historic Gulfstream Hotel

Lighting Analysis - Ground Level

Designer

Date
Jan. 28, 2016

Scale

Drawing No.

1 of 1

JRA architects
829 E Market Street, Suite B
Louisville, Kentucky 40206
502.583.4697

STATE OF FLORIDA
MARK E. THIER
AR97544
REGISTERED ARCHITECT

SITE DEVELOPMENT SUBMITTAL

HISTORIC GULFSTREAM HOTEL
SITE DEVELOPMENT SUBMITTAL
HUDSON HOLDINGS, LLC
LAKE WORTH, FL

ARCHITECTURAL

PROJECT	2015-19
DATE	12/07/2015
DRAWN	KGEI
CHECKED	MET

REVISIONS

No.	Description	Date
1	CITY COMMENTS	1/18/16
2	SIGNAGE	1/19/16
3	Additional Comments	1/28/16

JRA ARCHITECTS HAS RETAINED AN ELECTRONIC VERSION OF THESE DRAWINGS. THE CLIENT AGREES NOT TO REUSE THESE DRAWINGS - IN ELECTRONIC OR ANY OTHER FORMAT - IN WHOLE, OR IN PART, FOR ANY PURPOSE OTHER THAN FOR THE PROJECT. THE CLIENT AGREES NOT TO TRANSFER THESE ELECTRONIC FILES TO OTHERS WITHOUT THE PRIOR WRITTEN CONSENT OF THE ARCHITECT. THE CLIENT FURTHER AGREES TO WAIVE ALL CLAIMS AGAINST THE ARCHITECT RESULTING IN ANY WAY FROM ANY UNAUTHORIZED CHANGES TO OR REUSE OF THE ELECTRONIC FILES FOR ANY OTHER PROJECT BY ANYONE OTHER THAN THE ARCHITECT.

GROUND LEVEL LIGHTING STUDY

A-30

COPYRIGHT 2016 - JRA, INC.

2/4/2016 11:47:56 AM

C:\Users\skirplet\Documents\201519- GULFESTREAM HOTEL_CENTRAL_skirplet.rvt

Plan View
Scale 1" = 16'

LUMINAIRE SCHEDULE

Symbol	Label	Qty	Catalog Number	Description	Lamp	File	Lumens	LLF	Watts
	D	6	LCN2-GRV-III-36LED-NW-350 POST TOP LANTERN; 8" TYPE III PRISMATIC GLASS REFRACTOR;		THIRTY-SIX LED VERTICAL POWER ARRAY WITH: CLEAR PATTERNED LENS; 350MA DRIVE CURRENT - - 41 INPUT WATTS	LCN2-GRV3-36LED-NW-350.ies	Absolute	1.00	41
	E	38	2263LED	9-3/4"SQ. X 5-1/2"H. LED FIXTURE CLEAR LENS		2263LED.IES	Absolute	1.00	27.04
	F	2	6698LED	8"L. X 6"W. X 11"H. LED WALL LUMINAIRE ONE MODULE WITH ONE 3000K LED ARRAY; CLEAR GLASS LENS WITH ALUMINUM REFLECTOR		6698LED.IES	Absolute	1.00	20.45

STATISTICS

Description	Symbol	Avg	Max	Min	Max/Min	Avg/Min
Calc Zone #4	+	2.4 fc	14.2 fc	0.0 fc	N / A	N / A
TERRACE-annex	+	1.0 fc	15.1 fc	0.0 fc	N / A	N / A
TERRACE-pool	+	1.4 fc	41.5 fc	0.0 fc	N / A	N / A
TERRACE - existing hotel	+	2.0 fc	22.8 fc	0.0 fc	N / A	N / A

THIS LIGHTING STUDY WAS PERFORMED BASED UPON THE CONCEPTUAL DESIGN PLANS CONTAINED WITHIN THIS SUBMITTAL. FINAL LIGHTING ANALYSIS WILL BE DONE UPON FINAL APPROVED BUILDING DESIGN

VISUAL

Historic Gulfstream Hotel

Lighting Analysis Plan - 2nd (Terrace) Level

Designer

Date
Jan. 28, 2016

Scale

Drawing No.

1 of 1

CONCEPTUAL SITE DEVELOPMENT PLAN - SECOND LEVEL LIGHTING STUDY

JRA architects
829 E Market Street, Suite B
Louisville, Kentucky 40206
502.583.4697

STATE OF FLORIDA
MARK E. THIER
AR97544
REGISTERED ARCHITECT

SITE DEVELOPMENT SUBMITTAL

HISTORIC GULFSTREAM HOTEL
SITE DEVELOPMENT SUBMITTAL
HUDSON HOLDINGS, LLC
LAKE WORTH, FL

ARCHITECTURAL

PROJECT	2015-19
DATE	12/07/2015
DRAWN	KGEI
CHECKED	MET

REVISIONS

No.	Description	Date
1	CITY COMMENTS	1/18/16
3	Additional Comments	1/28/16

JRA ARCHITECTS HAS RETAINED AN ELECTRONIC VERSION OF THESE DRAWINGS. THE CLIENT AGREES NOT TO REUSE THESE DRAWINGS - IN ELECTRONIC OR ANY OTHER FORMAT - IN WHOLE, OR IN PART, FOR ANY PURPOSE OTHER THAN THE PROJECT. THE CLIENT AGREES NOT TO TRANSFER THESE ELECTRONIC FILES TO OTHERS WITHOUT THE PRIOR WRITTEN CONSENT OF THE ARCHITECT. THE CLIENT FURTHER AGREES TO WAIVE ALL CLAIMS AGAINST THE ARCHITECT RESULTING IN ANY WAY FROM ANY CHANGES MADE OR REUSE TO OR REUSE OF THE ELECTRONIC FILES FOR ANY OTHER PROJECT BY ANYONE OTHER THAN THE ARCHITECT.

SECOND FLOOR (TERRACE) LIGHTING STUDY

A-31

COPYRIGHT 2016 - JRA, INC.

2/4/2016 11:49:22 AM

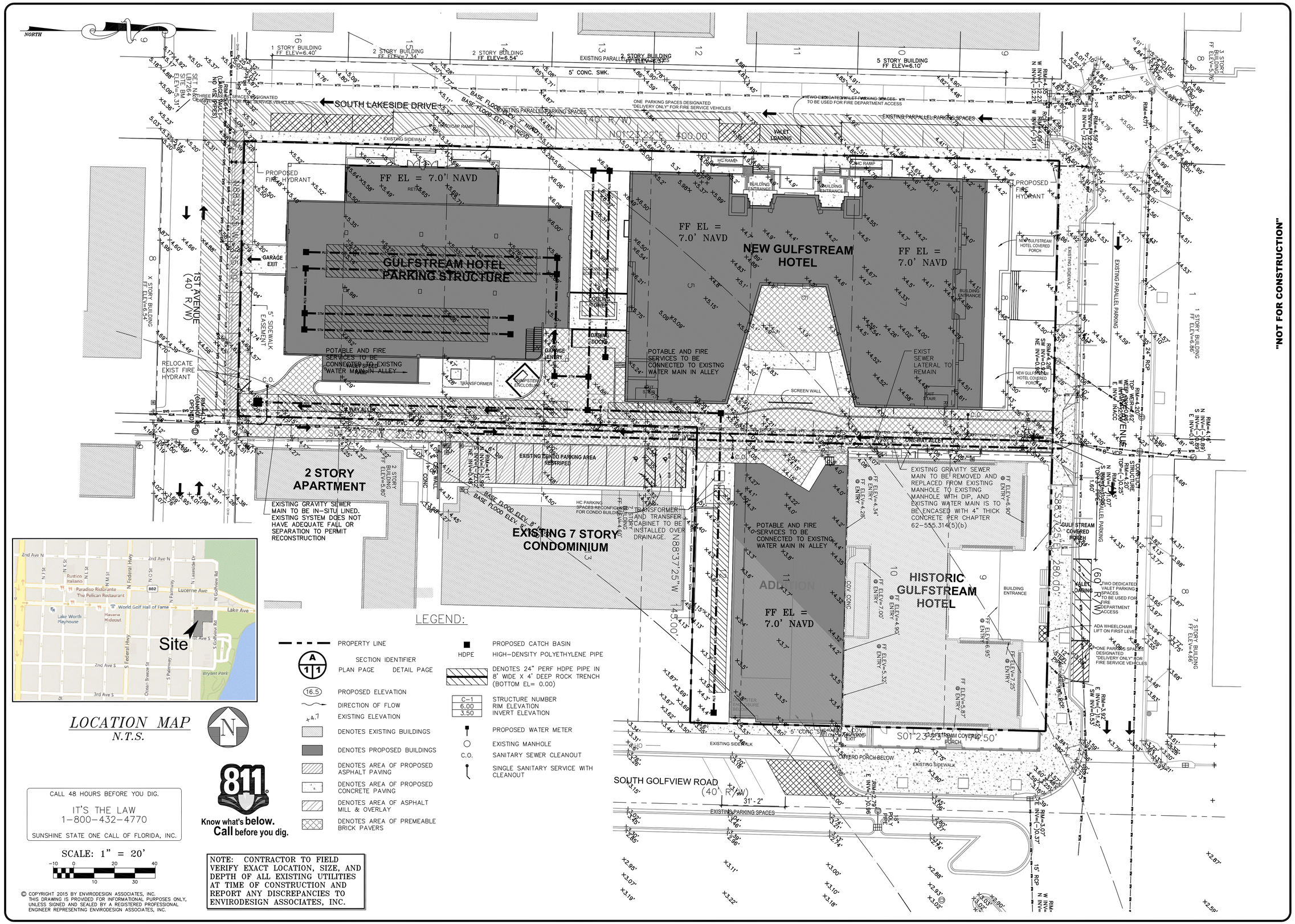

"NOT FOR CONSTRUCTION"

NO.	DATE:	REVISIONS:	BY:
1	1/28/16	SIDEWALK ADJUSTMENT ALONG 1ST AVE	BAB

NOT VALID WITHOUT ENGINEER'S SEAL

JOSEPH A. PIKE, P.E.
FL REG # 42696

CIVIL SITE IMPROVEMENTS PLAN FOR:
GULFSTREAM HOTEL
LAKE AVENUE
LAKE WORTH, FLORIDA

EnviroDesign Associates Inc.
www.envirodesign.com
ENGINEERS • ENVIRONMENTAL CONSULTANTS
FLORIDA CERTIFICATE OF AUTHORIZATION No 5626
298 Pineapple Grove Way Delray Beach, Florida 33444
Phone: (561) 274-6500 Fax: (561) 274-8558

DRAWN: B.A.B.

CHECKED: J.A.P.

DATE: 2/04/16

JOB NO. 150XX-ENG

SHEET NO. 1 OF 6

O:\2015\15047 Gulfstream Hotel Lake Worth- Hudson\DWG\15047-ENG.dwg, 2/4/2016 11:02:01 AM, ARCH D

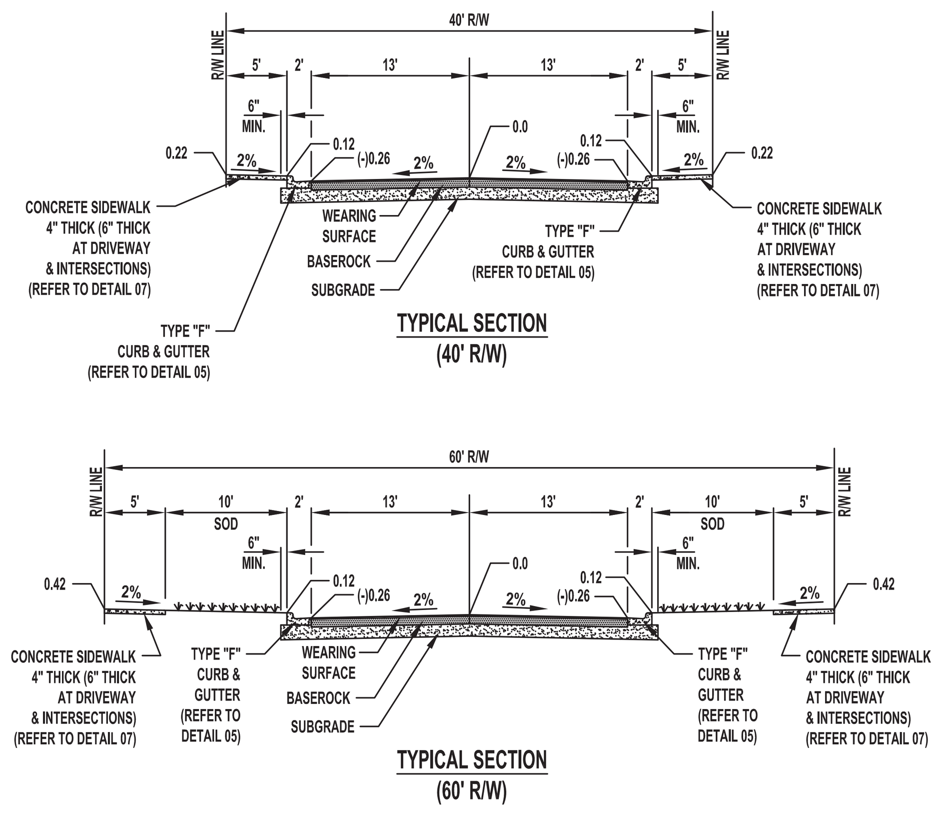

PAVEMENT SPECIFICATIONS	
WEARING SURFACE	1 1/2" TYPE S-III (TWO 3/4" LIFTS)
BASE	8" BASEROCK (LBR 100) COMPACTED TO 98% MAX. DENSITY PER AASHTO T-180. (2 EQUAL LIFTS) OR 10" CRUSHED CONC. PRIME & TACK COAT PER FDOT SECTION 300.
SUBGRADE	12" STABILIZED SUBGRADE COMPACTED TO 98% MAX. DENSITY PER AASHTO T-180.

VARIATION FROM MATERIAL SPECIFICATIONS WILL BE CONSIDERED ON A CASE BY CASE BASIS BY THE CITY ENGINEER.

CITY OF LAKE WORTH PUBLIC SERVICES DEPARTMENT | TYPICAL RIGHT-OF-WAY SECTIONS | DETAIL NO. 02 | ISSUED: 09/18/13

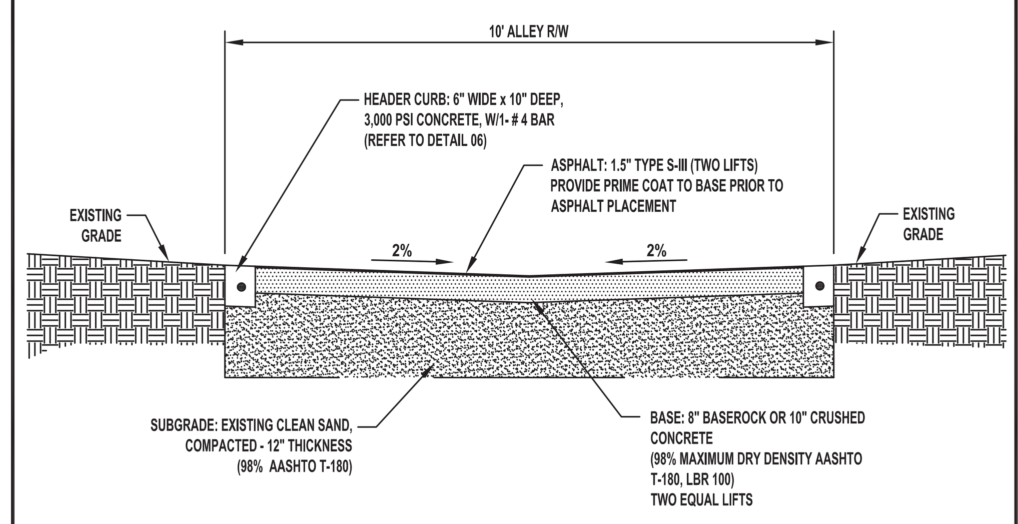

ALLEY PAVEMENT SECTION

NOTE: MINIMUM 0.50% LONGITUDINAL SLOPE REQUIRED.

CITY OF LAKE WORTH PUBLIC SERVICES DEPARTMENT | ALLEY PAVEMENT SECTION | DETAIL NO. 03 | ISSUED: 09/18/13

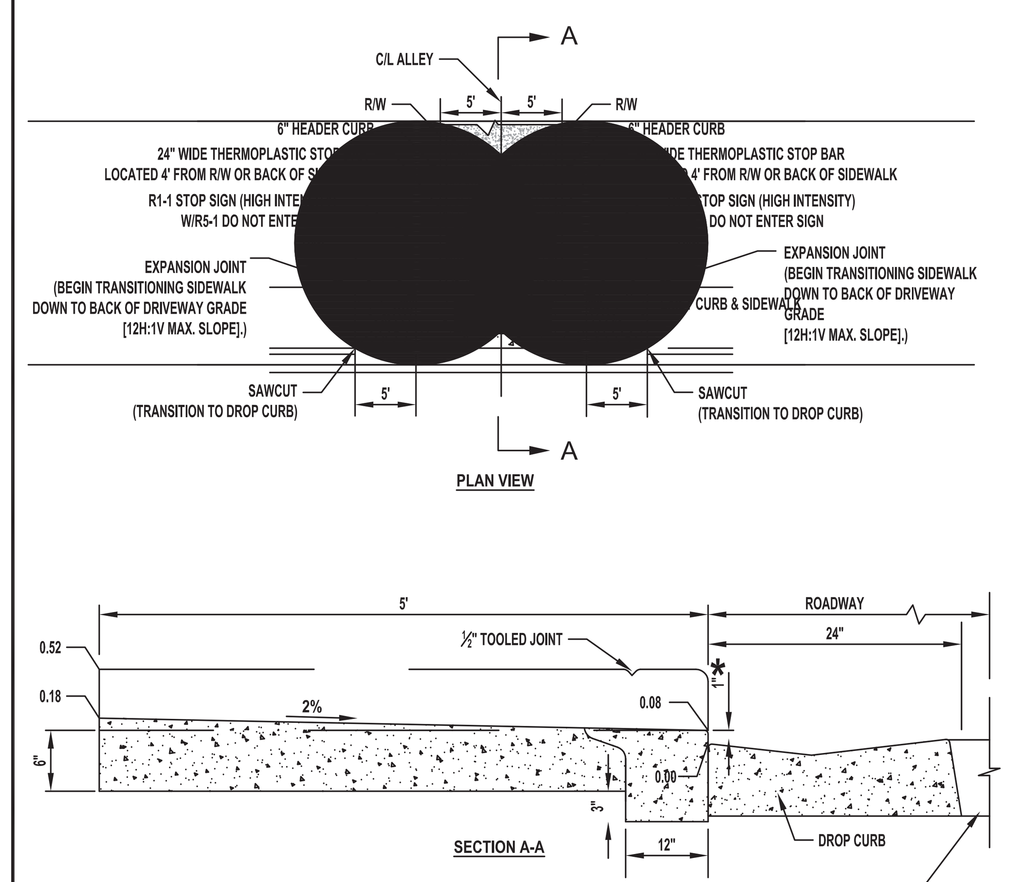

ALLEY DRIVEWAY TURNOUT DETAIL

* NOTE:
EDGE OF DRIVEWAY TO BE 1" ABOVE ROADWAY EDGE OF PAVEMENT GRADE.

CITY OF LAKE WORTH PUBLIC SERVICES DEPARTMENT | ALLEY AND DRIVEWAY TURNOUTS | DETAIL NO. 04 | ISSUED: 09/18/13

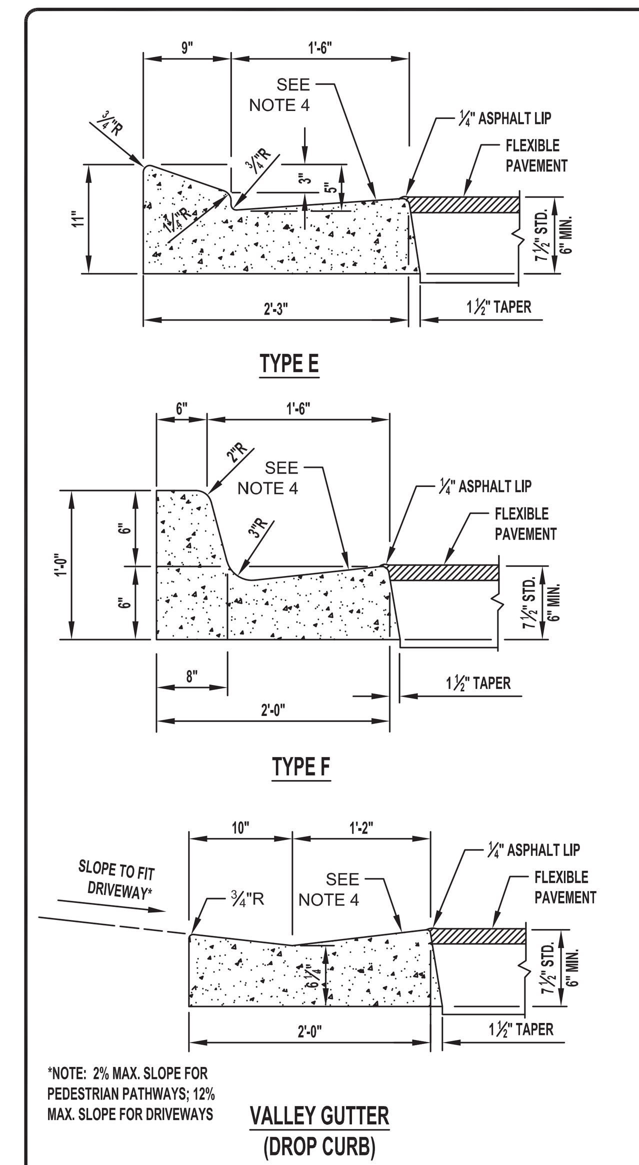

NOTES:
1. ULTIMATE STRENGTH OF CONCRETE FOR CURBS AND GUTTERS SHALL BE 3,000 P.S.I. @ 28 DAYS.
2. 1/8"-1/4" CONTRACTION JOINTS IN CURB AND GUTTER SHALL BE CUT AS SHOWN AND AT 10 FT. MAXIMUM SPACING. NO SECTION SHALL BE LESS THAN 4 FT.
3. WHEN PAVEMENT IS CONCRETE, PROVIDE A 1/2" EXPANSION JOINT WITH PRE-FORMED JOINT FILLER & JOINT SEAL BETWEEN CURB AND CONCRETE PAVEMENT. (1-1/2" TAPER ON CURB FACE NOT REQUIRED AT CONCRETE PAVEMENT.)
4. WHEN USED ON HIGH EDGE OF PAVEMENT, THE CROSS SLOPE OF TYPES "E", "F", AND VALLEY GUTTER SHALL MATCH THE CROSS SLOPE OF THE ADJACENT EDGE OF PAVEMENT. THE THICKNESS OF THE LIP SHALL BE 6" MINIMUM UNLESS OTHERWISE SHOWN ON PLANS. THE SURFACE ON THE LOW EDGE OF PAVEMENT TO BE 1/4" ABOVE LIP OF GUTTER. SURFACE ON HIGH EDGE OF PAVEMENT TO BE FLUSH WITH LIP OF CURB AND GUTTER. IF BOTH EDGES ARE AT SAME ELEVATION, SURFACE SHALL BE FLUSH.
5. ENDS OF TYPE "E" & "F" CURBING SHALL TRANSITION FROM FULL HEIGHT TO FLUSH IN 3 FEET.
6. THE MINIMUM CONSTRUCTED FLOW-LINE GRADIENT FOR STREET DRAINAGE UTILIZING CURB & GUTTER OR VALLEY GUTTER SHALL BE 0.20%.
7. REFER TO FDOT INDEX 300 FOR ADDITIONAL INFORMATION.
8. CONCRETE CURBING SHALL BE CONSTRUCTED ON A 4" THICK BASEROCK CURB PAD

CITY OF LAKE WORTH PUBLIC SERVICES DEPARTMENT | CONCRETE CURB AND GUTTER | DETAIL NO. 05 | ISSUED: 09/18/13

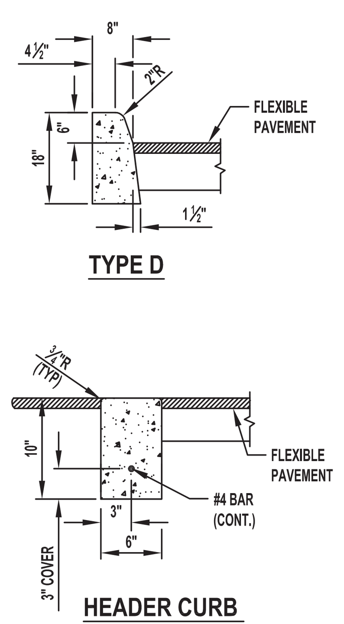

NOTES:
1. ULTIMATE STRENGTH OF CONCRETE FOR CURBS SHALL BE 3,000 P.S.I. @ 28 DAYS.
2. 1/8" -1/4" CONTRACTION JOINTS IN CURBS SHALL BE 3 1/2" MIN. DEPTH (AS MEASURED FROM TOP OF ADJACENT PAVEMENT) AND AT 10-FOOT CENTERS. NO SECTION SHALL BE LESS THAN 4 FEET.
3. WHEN PAVEMENT IS CONCRETE, PROVIDE A 1/2" EXPANSION JOINT WITH PRE-FORMED JOINT FILLER & JOINT SEAL BETWEEN CURB AND CONCRETE PAVEMENT. (1-1/2" TAPER ON CURB FACE NOT REQUIRED AT CONCRETE PAVEMENT.)
4. ENDS OF ALL CURBING SHALL TRANSITION FROM FULL HEIGHT TO FLUSH IN 3 FEET.
5. THE MINIMUM CONSTRUCTED FLOW-LINE GRADIENT FOR STREET DRAINAGE UTILIZING CURB & GUTTER OR VALLEY GUTTER SHALL BE 0.20%.
6. REFER TO FDOT INDEX 300 FOR ADDITIONAL INFORMATION.

CITY OF LAKE WORTH PUBLIC SERVICES DEPARTMENT | CONCRETE CURB | DETAIL NO. 06 | ISSUED: 09/18/13

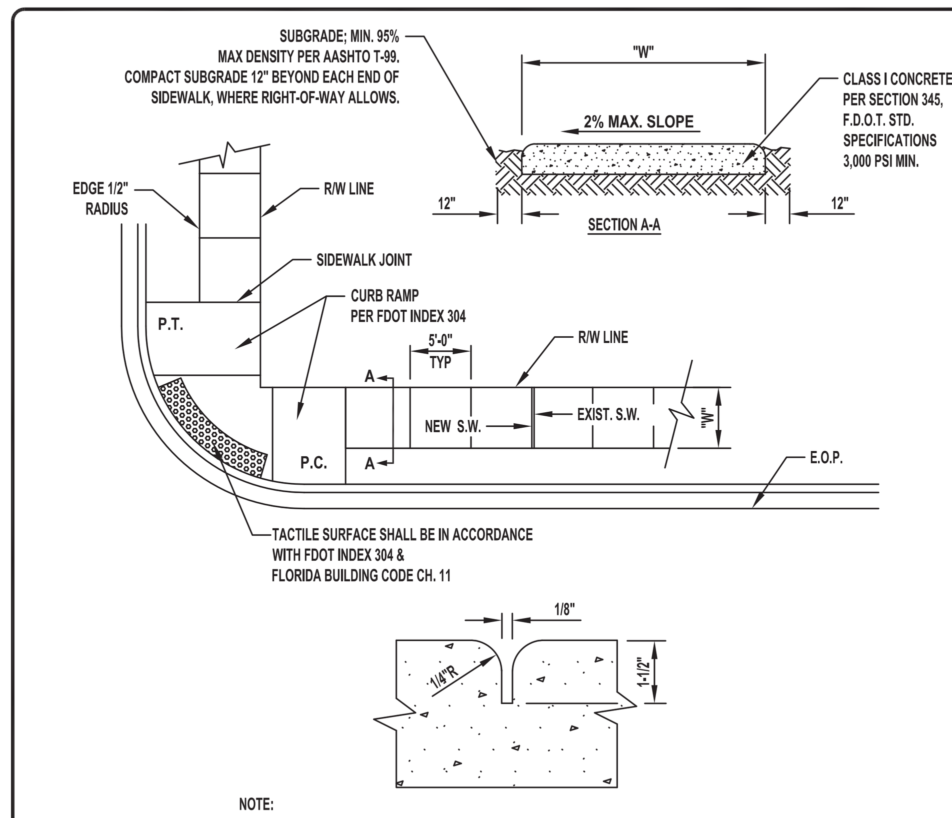

NOTE:
1. ALL SIDEWALKS SHALL BE CONSTRUCTED THROUGH DRIVEWAYS.
2. ALL SIDEWALKS SHALL INCLUDE ADA COMPLIANT RAMPS @ INTERSECTIONS.
3. CONCRETE SHALL BE BROOM FINISHED WITH EVEN DUSTLESS SURFACE.

TABLE OF SIDEWALK THICKNESS - "T"	
RESIDENTIAL AREAS	4"
WITHIN 10' OF CROSS-STREETS, AT DRIVEWAYS & OTHER AREAS	6"

TABLE OF SIDEWALK WIDTHS - "W"	
STANDARD WIDTH	5'
OTHER AREAS AS SPECIFIED BY THE CITY ENGINEER.	

CONCRETE WALK CONSTRUCTION

CITY OF LAKE WORTH PUBLIC SERVICES DEPARTMENT | CONCRETE WALK | DETAIL NO. 07 | ISSUED: 09/18/13

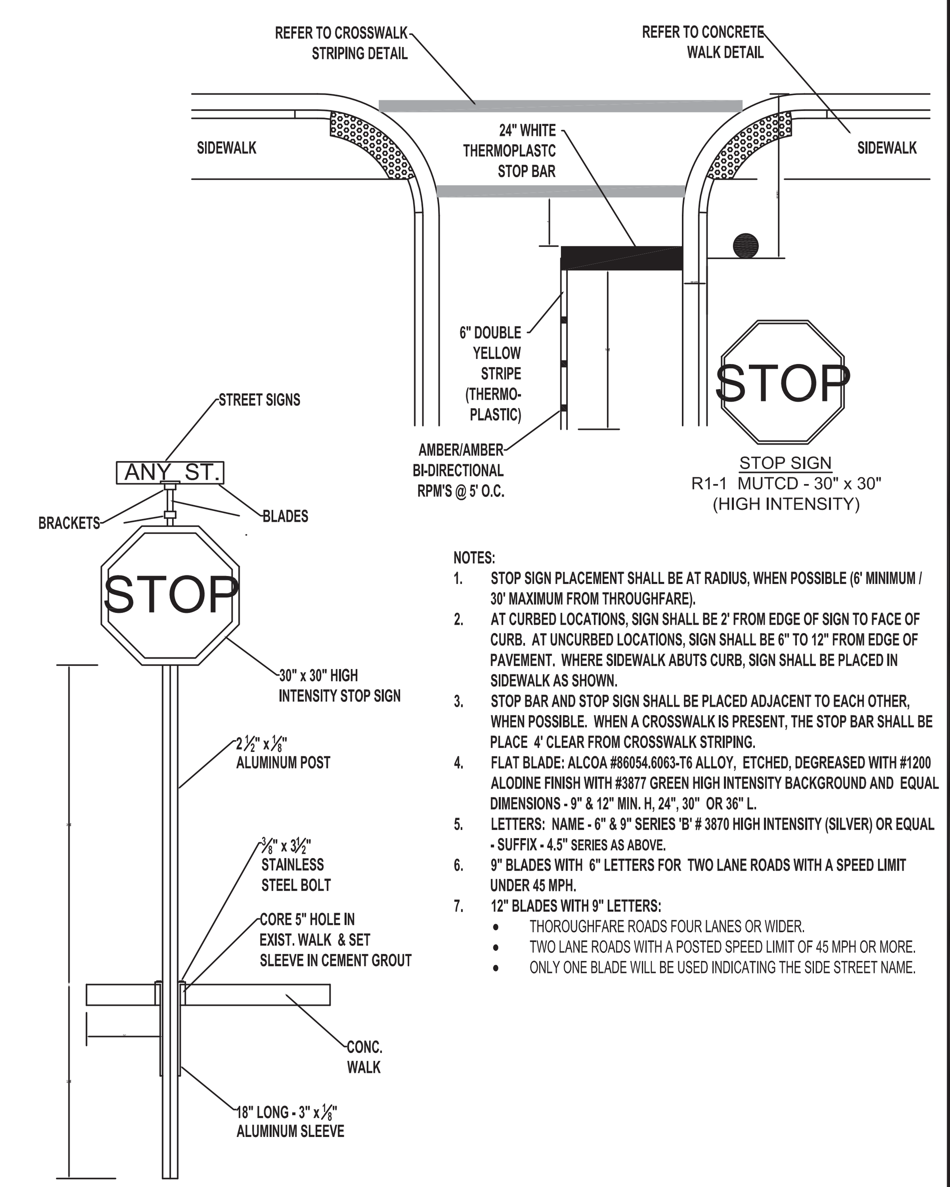

NOTES:
1. STOP SIGN PLACEMENT SHALL BE AT RADIUS, WHEN POSSIBLE (6' MINIMUM / 30' MAXIMUM FROM THROUGHFARE).
2. AT CURBED LOCATIONS, SIGN SHALL BE 2' FROM EDGE OF SIGN TO FACE OF CURB. AT UNCURBED LOCATIONS, SIGN SHALL BE 6" TO 12" FROM EDGE OF PAVEMENT. WHERE SIDEWALK ABUTS CURB, SIGN SHALL BE PLACED IN SIDEWALK AS SHOWN.
3. STOP BAR AND STOP SIGN SHALL BE PLACED ADJACENT TO EACH OTHER, WHEN POSSIBLE. WHEN A CROSSWALK IS PRESENT, THE STOP BAR SHALL BE PLACE 4' CLEAR FROM CROSSWALK STRIPING.
4. FLAT BLADE: ALCOA #86054.6063-T6 ALLOY, ETCHED, DEGREASED WITH #1200 ALODINE FINISH WITH #3877 GREEN HIGH INTENSITY BACKGROUND AND EQUAL DIMENSIONS - 9" & 12" MIN. H, 24", 30" OR 36" L.
5. LETTERS: NAME - 6" & 9" SERIES 'B' # 3870 HIGH INTENSITY (SILVER) OR EQUAL - SUFFIX - 4.5" SERIES AS ABOVE.
6. 9" BLADES WITH 6" LETTERS FOR TWO LANE ROADS WITH A SPEED LIMIT UNDER 45 MPH.
7. 12" BLADES WITH 9" LETTERS:
   - THOROUGHFARE ROADS FOUR LANES OR WIDER.
   - TWO LANE ROADS WITH A POSTED SPEED LIMIT OF 45 MPH OR MORE.
   - ONLY ONE BLADE WILL BE USED INDICATING THE SIDE STREET NAME.

CITY OF LAKE WORTH PUBLIC SERVICES DEPARTMENT | STOP SIGN AND STOP BAR | DETAIL NO. 09 | ISSUED: 09/18/13

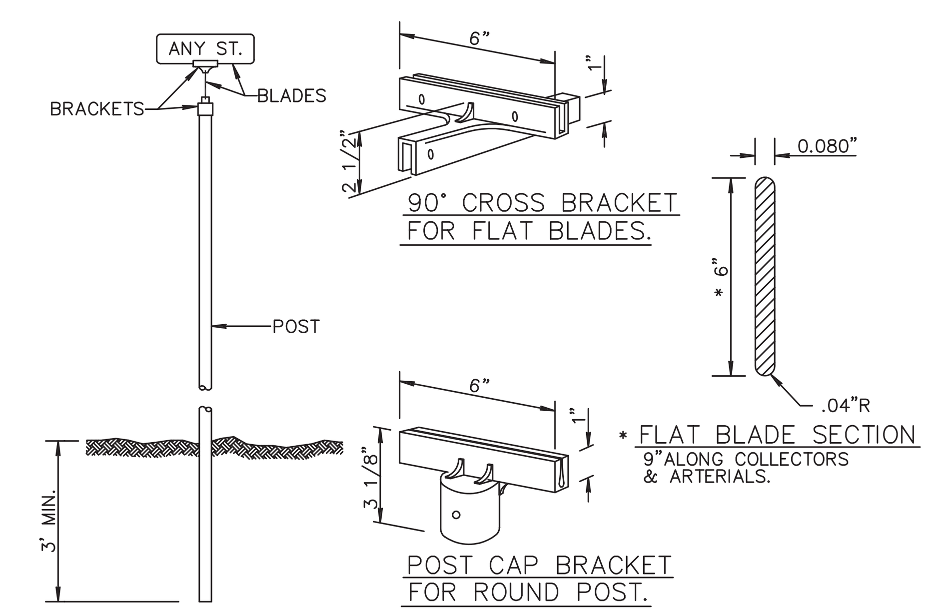

GENERAL SPECIFICATIONS:

* BLADE: ALCOA NO.86054,6063–T6 ALLOY, ETCHED, DEGREASED, AND DEBURRED WITH NO.1200 ALDOLINE FINISH WITH HIGH INTENSITY GREEN BACKGROUND DIMENSIONS: 6" OR 9" IN HEIGHT, AND 24", 30", OR 36" IN LENGTH

* LETTERS: NAME 4" SERIES "B" HIGH INTENSITY (SILVER) SUFFIX 2" SERIES "B" HIGH INTENSITY (SILVER) ALL LETTERS FOR SIGNS ALONG COLLECTOR OR ARTERIAL ROADWAYS SHALL BE 7" SERIES "B" WITH 4" SERIES "B" SUFFIX ON 9" HIGH BLADES.

* POST: STEEL FLANGED GALVANIZED CHANNEL. PER A.S.T.M. A123 WITHOUT ANCHOR PLATES.

* BRACKETS: DIE CAST HIGH STRENGTH ALUMINUM ALLOY, MIN. TENSILE STRENGTH 45,000 P.S.I., DEGREASED, TUMBLED, AND POLISHED SIDES OF ALL SLOTS SHALL BE SOLID METAL WITH TWO HOLES PER SLOT (SAME SIDE) DRILLED TO 7/32" AND TAPPED TO 1/4" TO RECEIVE STAINLESS STEEL ALLENHEAD SET SCREWS, SKIRT OF POST CAP BRACKET TO BE DRILLED AND TAPPED FOR 3 SCREWS OF WHICH NO TWO IS TO BE LESS THAN 90° OR MORE THAN 135° APART. (METRO HUSKEY NO.6 OR EQUAL.)

STREET SIGN DETAIL RT 2.1a

CITY OF LAKE WORTH PUBLIC SERVICES DEPARTMENT | STREET SIGN DETAIL | DETAIL NO. 10 | ISSUED: 09/18/13

Know what's **below.** **Call** before you dig.

CALL 48 HOURS BEFORE YOU DIG.
IT'S THE LAW
1–800–432–4770
SUNSHINE STATE ONE CALL OF FLORIDA, INC.

© COPYRIGHT 2015 BY ENVIRODESIGN ASSOCIATES, INC. THIS DRAWING IS PROVIDED FOR INFORMATIONAL PURPOSES ONLY, UNLESS SIGNED AND SEALED BY A REGISTERED PROFESSIONAL ENGINEER REPRESENTING ENVIRODESIGN ASSOCIATES, INC.

NO.	DATE:	REVISIONS:	BY:
△	.	.	.

NOT VALID WITHOUT ENGINEER'S SEAL
JOSEPH A. PIKE, P.E. FL REG. # 42696
Joseph Pike
2016-01-19
09:29-05:00

PAVING & DRAINAGE DETAILS FOR:
GULFSTREAM HOTEL
LAKE AVENUE
LAKE WORTH, FLORIDA

EnviroDesign Associates Inc.
www.envdesign.com
ENGINEERS • ENVIRONMENTAL CONSULTANTS
FLORIDA CERTIFICATE OF AUTHORIZATION No. 6506
298 Pineapple Grove Way Delray Beach, Florida 33444
Phone: (561) 274-6500 Fax: (561) 274-8558

DRAWN: B.A.B.
CHECKED: J.A.P.
DATE: 12/22/15
JOB NO. 15047-DTL
SHEET NO. 2 OF 6

O:\2015\15047 Gulfstream Hotel Lake Worth- Hudson\DWG\15047-DTL.dwg, 12/22/2015 3:26:24 PM, ARCH D

TYPICAL SIGN. PLAN SYMBOL :
M.U.T.C.D. DESIGNATION : W1-3R *
* SIGN SIZE TO BE NOTED IF OTHER THAN STANDARD.

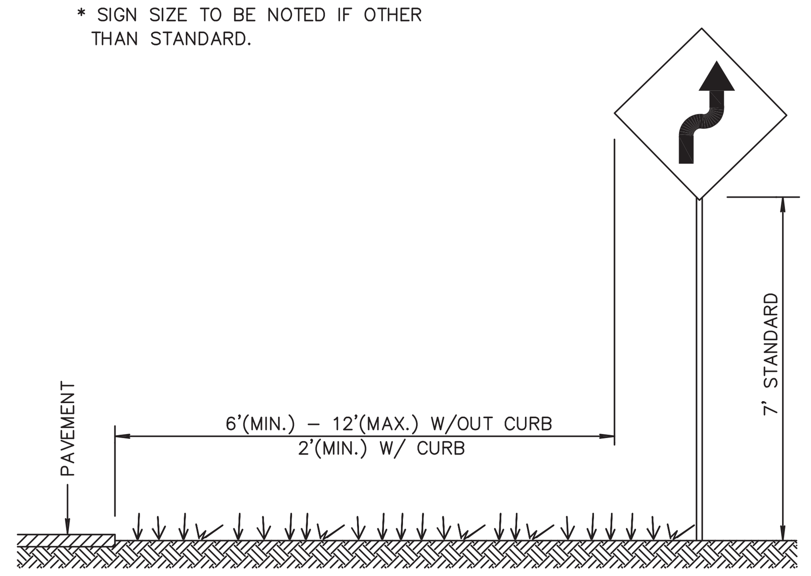

NOTES:

1. ALL SIGNS SHALL BE SPECIFIED USING THE M.U.T.C.D. DESIGNATION.
2. ALL SIGNS SHALL BE FACED WITH HIGH INTENSITY SHEETING MATERIAL OR BETTER.
3. SIGNS SHALL BE MANUFACTURED WITH 0.080" ALUMINUM BLANK.
4. POSTS SHALL BE GALVANIZED CHANNEL AT 2 LBS/L.F.
5. USE SHALL FOLLOW THE M.U.T.C.D. AND F.D.O.T. STANDARD DESIGN SPECIFICATIONS
6. ANY DEVIATION FROM THIS TYPICAL SHALL BE APPROVED BY THE CITY ENGINEER PRIOR TO INSTALLATION.
7. REFLECTIVE POSTS MAY BE USED IF M.U.T.C.D. STANDARD IS FOLLOWED.

CITY OF LAKE WORTH PUBLIC SERVICES DEPARTMENT | STREET SIGN DETAIL | DETAIL NO. 11 | ISSUED: 09/18/13

PAVEMENT MARKING SPECIFICATIONS

All Pavement markings to be installed per these typicals, plans and specifications, and as directed by the City Engineer and shall conform to the requirements of F.D.O.T. and the manual on uniform traffic control devices, (MUTCD).

PERMANENT MARKINGS

Installation:
- All markings shall be installed by the extruded method.
- Markings shall be free of weaves, bows, drips, drags, and other degrading items.
- Chalk shall be used for all layout markings

Materials:
- All materials shall be alkyd or hydrocarbon thermoplastic meeting all FDOT specifications.

Thickness:
- All markings shall be installed to yield 90 mils of material measured above the pavement surface.

Spheres:
- Reflective glass sheres are to be applied to all stripes and markings per FDOT specifications.

Alternate Material:
- STAYMARK marking tape, or equivalent may be used, as approved or directed by the City Engineer.

Layout:
- Layout shall be made using marking chalk.
- It is recommended that marking layout be inspected by the City Engineer prior to the placement of final markings.

TEMPORARY MARKINGS

Temporary markings may be used only as specified in this section, or as approved or directed by the City Engineer.

Final Pavement Surface:
- Only foil backed marking tape is allowed.
- All tape shall be totally removed concurrent with permanent marking placement.

Other Pavement Surfaces:
- Intermediate pavement surfaces may be marked with FDOT approved materials, designs, and specifications.

CITY OF LAKE WORTH PUBLIC SERVICES DEPARTMENT | PAVEMENT MARKING SPECIFICATIONS | DETAIL NO. 13 | ISSUED: 09/18/13

ALL PAVEMENT MARKINGS

All paved surfaces shall be properly marked prior to the hours of darkness.

RAISED PAVEMENT MARKERS

- R.P.M.s shall be installed on all lane lines and centerlines, spaced at 20' or 40'.
- R.P.M.s shall be a 4 x 4 type class "B" marker meeting F.D.O.T. specifications and shall be approved by the City Engineer prior to use.
- R.P.M.'s shall be installed using alkyd thermoplastic on asphalt and epoxy on concrete.

OTHER NOTES

- All Materials within right–of–way shall be thermoplastic and per F.D.O.T. specifications.
- Pavement marking within private parking lots may be painted according to F.D.O.T. specifications, except for all stop bars adjacent to public rifgt–of–way.

CITY OF LAKE WORTH PUBLIC SERVICES DEPARTMENT | PAVEMENT MARKING SPECIFICATIONS | DETAIL NO. 14 | ISSUED: 09/18/13

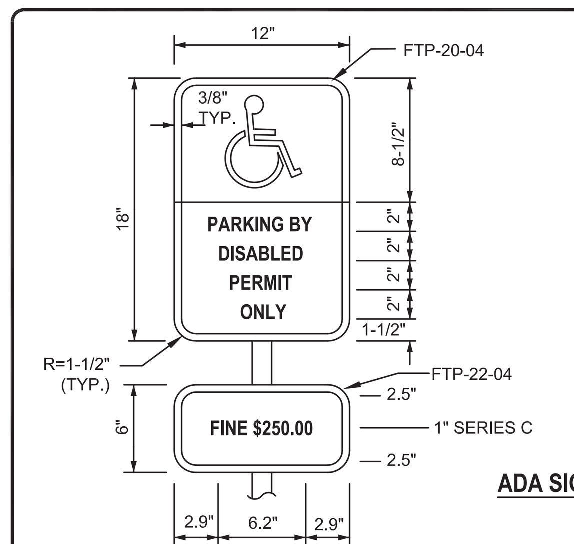

NOTES:

SIGN FTP-20-04
1. ALL LETTERS ARE 1" SERIES "C".
2. TOP PORTION OF SIGN SHALL HAVE A REFLECTORIZED BLUE BACKGROUND WITH WHITE REFLECTORIZED LEGEND & BORDER.
3. BOTTOM PORTION OF SIGN SHALL HAVE A REFLECTORIZED WHITE BACKGROUND WITH BLACK OPAQUE LEGEND & BORDER.

SIGN FTP-22-04
1. ALL LETTERS ARE 1" SERIES "C".
2. BACKGROUND WHITE, LEGEND AND BORDER BLACK.

ADA SIGN DETAILS

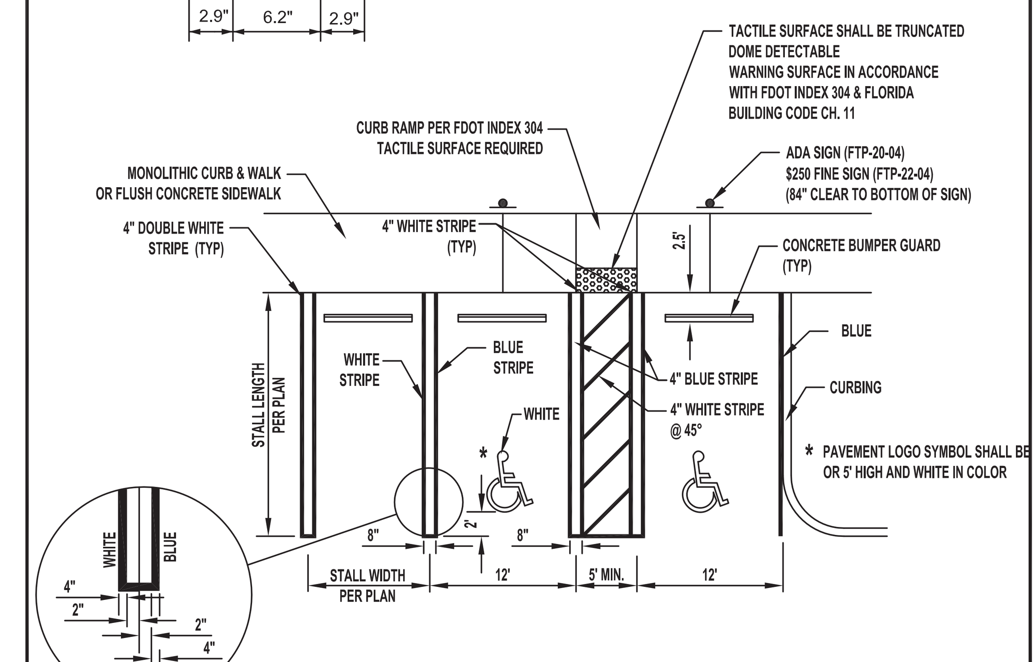

TYPICAL PARKING STALL AND ACCESSIBLE SPACE DETAIL

CITY OF LAKE WORTH PUBLIC SERVICES DEPARTMENT | ACCESSIBLE PARKING SIGNAGE AND PAVEMENT MARKINGS | DETAIL NO. 15 | ISSUED: 09/18/13

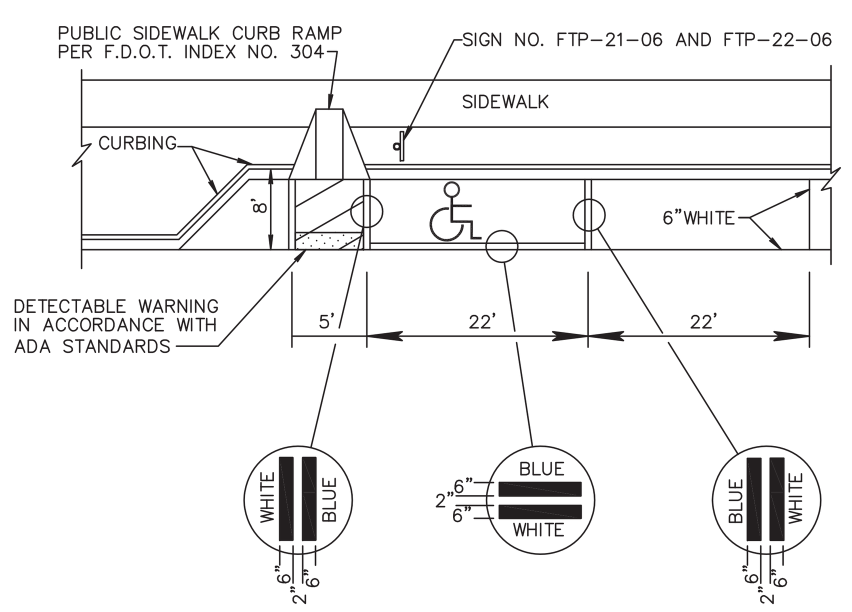

NOTE:
HANDICAPPED PARKING SPACE MUST BE FIRST OR LAST PARALLEL PARKING SPACE IN THE ROW. ADJACENT TO LANDSCAPE ISLAND. IF SPACE, IS AT THE FRONT OF PARKING ROW ACCESS PANEL MUST BE IN FRONT OF CAR AND IF SPACE IS AT THE END OF PARKING ROW ACCESS PANEL MUST BE AT THE REAR OF CAR.

CITY OF LAKE WORTH PUBLIC SERVICES DEPARTMENT | TYPICAL PARKING SPACES | DETAIL NO. 16 | ISSUED: 09/18/13

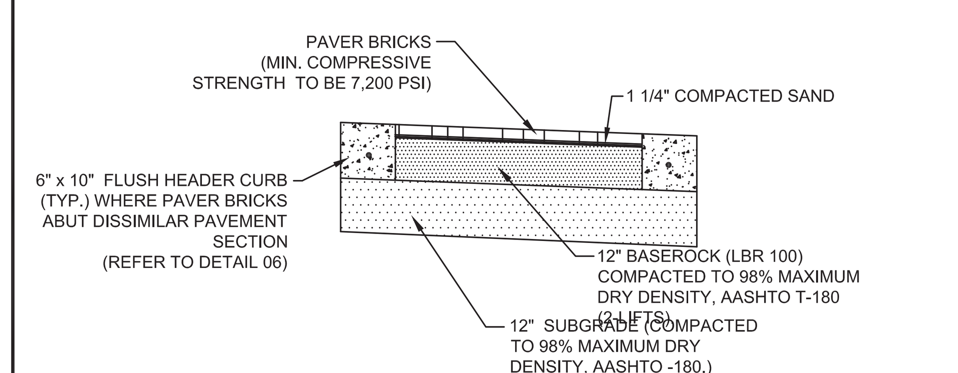

NOTE: INSTALLATION OF PAVER BRICKS SHALL BE IN CONFORMANCE WITH MANUFACTURER'S INSTALLATION CRITERIA. PAVER BRICK THICKNESS SHALL BE MINIMUM 2-3/8 INCHES. PAVER BRICK SHALL BE COLORED THROUGH THE FULL DEPTH OF THE PAVER AND NOT JUST THE SURFACE. THE SAND BEDDING COURSE SHALL BE WELL GRADED, CLEAN, WASHED LIMESTONE SCREENINGS WITH 100% PASSING A 3/8" SIEVE SIZE AND A MAXIMUM 3% PASSING A No. 200 SIEVE SIZE. DO NOT USE MASON SAND. ALL EDGES OF THE PAVER BRICK SHALL BE RESTRAINED BY CONCRETE HEADER CURB OR VALLEY GUTTER. CITY TO APPROVE SIDEWALK PAVER MANUFACTURER, TYPE, COLOR, AND SIZE. SUBMIT THREE (3) SAMPLE PAVERS FOR APPROVAL.

PAVER BRICK DETAIL
N.T.S.

CITY OF LAKE WORTH PUBLIC SERVICES DEPARTMENT | PAVER BRICK | DETAIL NO. 17 | ISSUED: 09/18/13

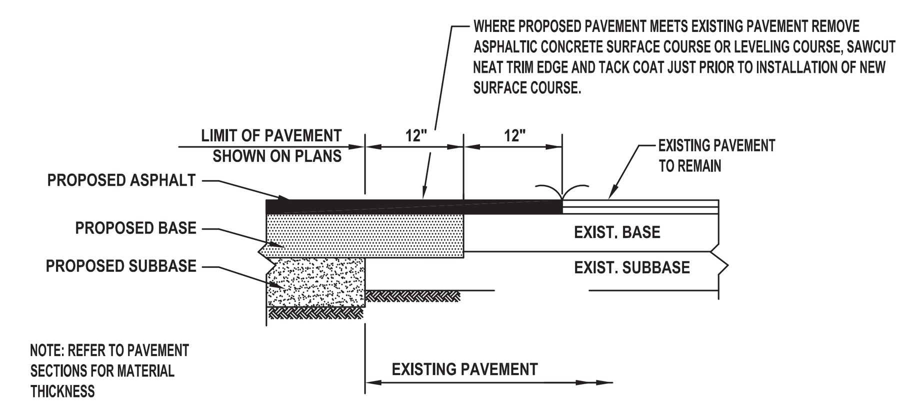

PAVEMENT RESTORATION DETAIL

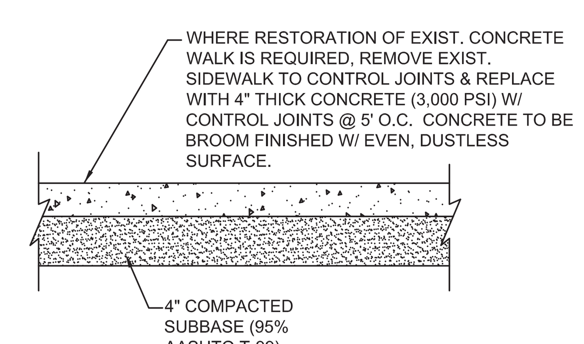

CONCRETE SIDEWALK RESTORATION DETAIL
N.T.S.

CITY OF LAKE WORTH PUBLIC SERVICES DEPARTMENT | PAVEMENT AND SIDEWALK RESTORATION | DETAIL NO. 19 | ISSUED: 09/18/13

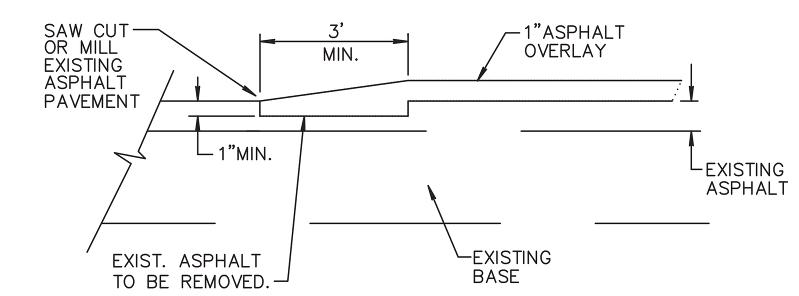

NEW OVERLAY PAVEMENT JOINT

NOTE:
THIS METHOD OF PAVEMENT JOINT SHALL BE USED FOR ANY APPLICATION OR CONSTRUCTION WHERE PROPOSED PAVEMENT WILL BE CONNECTED TO EXISTING PAVEMENT.

CITY OF LAKE WORTH PUBLIC SERVICES DEPARTMENT | PAVEMENT JOINT | DETAIL NO. 20 | ISSUED: 09/18/13

Know what's below. Call before you dig.

CALL 48 HOURS BEFORE YOU DIG.
IT'S THE LAW
1–800–432–4770
SUNSHINE STATE ONE CALL OF FLORIDA, INC.

© COPYRIGHT 2015 BY ENVIRODESIGN ASSOCIATES, INC.
THIS DRAWING IS PROVIDED FOR INFORMATIONAL PURPOSES ONLY, UNLESS SIGNED AND SEALED BY A REGISTERED PROFESSIONAL ENGINEER REPRESENTING ENVIRODESIGN ASSOCIATES, INC.

NO.	DATE:	REVISIONS:	BY:
△	.	.	.

NOT VALID WITHOUT ENGINEER'S SEAL
JOSEPH A. PIKE, P.E. FL. REG. # 42696
Joseph Pike
2016-01-19 09:31-05:00

PAVING & DRAINAGE DETAILS FOR:
GULFSTREAM HOTEL
LAKE AVENUE
LAKE WORTH, FLORIDA

EnviroDesign Associates Inc.
www.envdesign.com
ENGINEERS • ENVIRONMENTAL CONSULTANTS
FLORIDA CERTIFICATE OF AUTHORIZATION No. 6506
298 Pineapple Grove Way Delray Beach, Florida 33444
Phone: (561) 274–6500 Fax: (561) 274–8558

DRAWN: B.A.B.
CHECKED: J.A.P.
DATE: 12/22/15
JOB NO. 15047–DTL
SHEET NO. 3 OF 6

O:\2015\15047 Gulfstream Hotel Lake Worth– Hudson\DWG\15047–DTL.dwg, 12/22/2015 3:27:01 PM, ARCH D

PAVING, GRADING AND DRAINAGE NOTES

1. ALL PAVING AND DRAINAGE WORK IN THE PALM BEACH COUNTY (PBC) RIGHT-OF-WAY SHALL BE CONSTRUCTED IN FULL ACCORDANCE WITH THE PBC LATEST STANDARDS. ALL PAVING AND DRAINAGE WORK IN THE FLORIDA DEPARTMENT OF TRANSPORTATION (FDOT) RIGHT-OF-WAY SHALL BE CONSTRUCTED IN FULL ACCORDANCE WITH THE FDOT LATEST STANDARDS.

2. COMPACTED SUBGRADE SHALL BE COMPACTED AND MEET THE DENSITY REQUIREMENTS AS DETERMINED BY THE AASHTO T-180 SPECIFICATIONS. SUBGRADE SHALL EXTEND 12 INCHES BEYOND THE PROPOSED EDGE OF PAVEMENT AND/OR 6" BEYOND VALLEY GUTTER, TYPE "F" CURB & GUTTER, OR TYPE "D" CURB. SUBGRADE SHALL BE 12 INCHES THICK COMPACTED TO 98% ACCORDING TO AASHTO T-180. ALL MUCK, STUMPS, ROOTS OR OTHER DELETERIOUS MATTER ENCOUNTERED IN THE PREPARATION OF THE SUBGRADE SHALL BE REMOVED COMPLETELY FROM THE CENTERLINE OF THE ROADWAY TO A WIDTH OF TEN FEET BEYOND THE EDGE OF PAVEMENT. IF SUBGRADE IS REQUIRED TO BE STABILIZED, THE REQUIRED BEARING VALUE DETERMINATIONS SHALL BE MADE BY THE FLORIDA BEARING TEST, TEST METHOD "C" OF AASHTO T-180 SPECIFICATIONS.

3. SHELLROCK BASE SHALL BE CONSTRUCTED IN ACCORDANCE WITH SECTION 250 OF THE FLORIA DEPARTEMENT OF TRANSPORATION STANDARD SPECIFICATIONS FOR ROAD AND BRIDGE CONSTRUCTION, LATEST EDITION. THE THICKNESS OF THE SHELLROCK BASE SHALL BE AS SHOWN ON THE DETAIL DRAWINGS AND SHALL BE COMPACTED TO A DENSITY OF 98% OF THE MAXIMUM DENSITY AS DETERMINED BY AASHTO T-180. THE SHELLROCK SHALL HAVE A MINIMUM OF 40% CARBONATES OF CALCIUM AND MAGNESIUM IN THE MATERIAL.

4. LIMEROCK BASE SHALL BE CONSTRUCTED IN ACCORDANCE WITH SECTION 200 OF THE FDOT STANDARD SPECIFICATIONS FOR ROAD AND BRIDGE CONSTRUCTION, LATEST EDITION. THE THICKNESS OF THE LIMEROCK BASE SHALL BE AS SHOWN ON THE DETAILED DRAWINGS AND SHALL BE COMPACTED TO A DENSITY OF 98% OF THE MAXIMUM DENSITY AS DETERMINED BY AASHTO T-180.

5. MUCK AND PEAT – IF MUCK AND/OR PEAT ARE ENCOUNTERED IN THE ROAD OR PARKING AREA, THEY WILL BE REMOVED COMPLETELY TO A WIDTH OF TEN FEET BEYOND THE EDGE OF PAVEMENT AND SHALL BE BACKFILLED WITH GRANULAR MATERIAL. IF HARDPAN IS ENCOUNTERED IN THE SWALE AREA, IT WILL REMOVED TO A WIDTH OF TWO FEET AT THE SWALE INVERT AND REPLACED WITH GRANULAR MATERIAL.

6. WHERE SOD IS DESIRED, LOWER THE GRADE 2 INCHES BELOW THE FINISHED GRADE TO ALLOW FOR THE THICKNESS OF THE SOD.

7. CLEARING AND GRUBBING – WITHIN THE LIMITS OF CONSTRUCTION ALL VEGETATION AND ROOT MATERIAL SHALL BE REMOVED.

8. GUMBO – WHERE GUMBO OR OTHER PLASTIC CLAYS ARE ENCOUNTERED, THEY SHALL BE REMOVED WITHIN THE ROADWAY AND PARKING AREAS ONE FOOT BELOW THE SUBGRADE EXTENDING HORIZONTALLY TO THE OUTSIDE EDGE OF THE SHOULDER AREA.

9. PRIME COAT SHALL BE IN ACCORDANCE WITH SECTION 300 OF THE FDOT STANDARD SPECIFICATION FOR ROAD AND BRIDGE CONSTRUCTION, LATEST EDITION. PRIME COAT SHALL BE RC-70 OR ASPHALT EMULSION PRIME (AEP). PRIME COAT SHALL BE APPLIED AT A RATE OF APPLICATION NOT LESS THAN 0.10 GALLONS PER SQUARE YARD FOR LIMEROCK BASES AND NOT LESS THAN 0.15 GALLONS PER SQUARE YARD FOR SHELL ROCK OR COQUINA SHELL BASES.

10. TACK COAT – BITUMINOUS TACK COAT SHALL CONFORM WITH THE REQUIREMENTS OF THE FDOT SPECIFICATIONS, LATEST EDITION AND SHALL BE APPLIED AT THE RATE OF 0.08 GALLONS PER SQUARE YARD, UNLESS A VARIATION IS APPROVED BY THE ENGINEER.

11. ASPHALTIC CONCRETE SURFACE COURSE SHALL BE IN ACCORDANCE WITH SECTION 334 OF THE FDOT STANDARD SPECIFICATIONS FOR ROAD AND BRIDGE CONSTRUCTION, LATEST ADDITION. THE THICKNESS OF THE SURFACE COURSE SHALL BE AS SHOWN ON THE DETAILED DRAWINGS.

12. ALL CONCRETE SHALL DEVELOP 2500 p.s.i. (MINIMUM) 28 DAY COMPRESSIVE STRENGTH OR GREATER WHERE NOTED ON PLANS. CLASS I CONCRETE SHALL CONFORM WITH THE FDOT SPECIFICATIONS, LATEST EDITION. CLASS I CONCRETE USED AS PAVING SHALL DEVELOP 3000 p.s.i. (MINIMUM) 28 DAYS. COMPRESSIVE STRENGTH.

13. PAVEMENT TRAFFIC STRIPES AND MARKINGS SHALL BE IN ACCORDANCE WITH CITY OF DELRAY BEACH CURRENT STANDARDS AND/OR MANUAL ON UNIFORM TRAFFIC CONTOL DEVICES FOR STREETS AND HIGHWAYS, AND/OR PALM BEACH COUNTY TRAFFIC DEPARTMENT TYPICAL T-P-10-001, WHERE APPLICABLE.

14. SEQUENCE OF CONSTRUCTION – THE SEQUENCE OF CONSTRUCTION SHALL BE SUCH THAT ALL UNDERGROUND INSTALLATIONS OF EVERY KIND THAT ARE BENEATH THE PAVEMENT, SHALL BE IN PLACE AND HAVE PROPER DENSITY PRIOR TO THE CONSTRUCTION AND COMPACTION OF THE SUBGRADE.

15. INLETS AND MANHOLES – ALL INLETS AND MANHOLES SHALL BE CONSTRUCTED IN ACCORDANCE WITH THE FDOT SPECIFICATIONS, LATEST EDITION, AND ROADWAY AND TRAFFIC DESIGN STANDARDS, LATEST EDITION, AND PBC STANDARDS LATEST EDITION, WHERE APPLICABLE.

16. GRATE ELEVATIONS REFER TO THE FLOWLINE OF THE GRATE.

17. GRADES SHOWN ARE FINISHED GRADES.

18. MINIMUM ROAD CROWN ELEVATION SHALL BE EL. TBD' N.A.V.D.

19. REINFORCED CONCRETE PIPE – THE PIPE SHALL CONFORM WITH THE REQUIREMENTS OF CLASS III OF ASTM C-76 AND WITH THE FDOT SPECIFICATIONS, LATEST EDITION. THE FIRST JOINT OF PIPE ENTERING OR LEAVING A MANHOLE OR INLET SHALL BE WRAPPED WITH FILTER FABRIC PER FDOT SPECIFICATIONS.

20. CORRUGATED ALUMINUM PIPE SHALL MEET THE REQUIREMENTS OF AASHTO M196 AND SECTIONS 125, 430 AND 943 OF THE FDOT STANDARD SPECIFICATIONS FOR ROAD AND BRIDGE CONSTRUCTION, LATEST EDITION.

21. MEASUREMENT OF THE LENGTH OF PIPE SHALL BE FROM THE CENTER OF THE STRUCTURE TO THE CENTER OF THE STRUCTURE.

22. PIPE BACKFILL – REQUIREMENTS FOR PIPE BACKFILL CROSSING ROADS OR PARKING AREAS SHALL BE DEFINED IN THE FDOT SPECIFICATIONS, LATEST EDITION. PIPELINE BACKFILL SHALL BE PLACED IN SIX INCH LIFTS AND COMPACTED TO 100% OF THE STANDARD PROCTOR (AASHTO) T-99 SPECIFICATIONS.

23. THE CONTRACTOR SHALL SUBMIT TO THE ENGINEER THREE (3) CERTIFIED COPIES OF A CHEMICAL AND SIEVE ANALYSIS OF THE SHELL ROCK BY A STATE OF FLORIDA CERTIFIED LAB WHEN CONSTRUCTING A SHELL ROCK BASE FOR ROADWAY.

24. PRIOR TO CERTIFICATION OF THE DRAINAGE SYSTEM, THE CONTRACTOR MUST PUMP DOWN AND LAMP THE DRAINAGE SYSTEM FOR INSPECTION BY THE ENGINEER AFTER FINISHED ROCK FOR THE ROADWAYS HAS BEEN INSTALLED.

GENERAL NOTES

1. CONTRACTOR SHALL PROTECT ALL PERMANENT REFERENCE MONUMENTS AND TAKE ALL PRECAUTIONS NECESSARY TO AVOID SURVEY MARKERS DURING CONSTRUCTION. CONTRACTOR SHALL BE RESPONSIBLE FOR REPLACEMENT OF PERMANENT REFERENCE MONUMENTS DISTURBED DURING CONSTRUCTION, AT NO ADDITIONAL COST TO THE OWNER.

2. CONTRACTOR SHALL BE RESPONSIBLE FOR THE PROTECTION OF ALL EXISTING UNDERGROUND UTILITIES WHETHER OR NOT SHOWN ON THE PLANS. UTILITIES SHOWN ON THE PLANS ARE FOR REFERENCE ONLY AND MAY NOT DEPICT ACTUAL LOCATIONS. CONTRACTOR SHALL NOTIFY ALL UTILITY COMPANIES FOR LOCATION AND DEPTH OF THEIR LINES PRIOR TO CONSTRUCTION.

3. CONTRACTOR SHALL BE RESPONSIBLE TO COORDINATE AND PAY FOR THE DEENERGIZING OF POWER LINES AND/OR HOLDING POWER POLES DURING CONSTRUCTION AT NO ADDITIONAL COST TO THE OWNER.

4. CONTRACTOR SHALL BE RESPONSIBLE TO COORDINATE AND PAY FOR THE REPLACEMENT OF TRAFFIC LOOPS IF DAMAGED DURING CONSTRUCTION AT NO ADDITIONAL COAST TO THE OWNER.

5. ALL ELEVATIONS REFER TO N.A.V.D. 1988. MINIMUM FINISHED FLOOR ELEVATION FOR ANY RESIDENTIAL STRUCTURE SHALL BE SET AT OR ABOVE ELEVATION 7.0' N.A.V.D. (WHICH IS ABOVE THE 100-YEAR FREQUENCY STORM).

6. SHOP DRAWINGS SHALL BE SUBMITTED TO THE ENGINEER FOR REVIEW PRIOR TO CONSTRUCTION OR INSTALLATION AS REQUIRED BY THE ENGINEER OR BY THE APPROPRIATE GOVERNING AGENCIES.

7. CONTRACTOR SHALL BE RESPONSIBLE TO SECURE AND PAY FOR, AT NO ADDITIONAL COST TO THE OWNER, ALL NECESSARY PERMITS, FEES AND LICENSES.

8. CONTRACTOR SHALL BE RESPONSIBLE FOR GIVING THE REQUIRED NOTICES AND COMPLYING WITH ALL PERMIT(S) CONDITIONS.

9. CONTRACTOR SHALL BE RESPONSIBLE TO COORDINATE AND PAY FOR THE HOLDING OF OTHER UTILITY POLES DURING CONSTRUCTION AT NO ADDITIONAL COST TO THE OWNER.

10. ALL CONCRETE SHALL DEVELOP 2500 p.s.i. (MINIMUM) 28 DAY COMPRESSIVE STRENGTH OR GREATER WHERE NOTED ON PLANS. CLASS I CONCRETE SHALL CONFORM WITH THE FDOT SPECIFICATIONS, LATEST EDITION. CLASS I CONCRETE USED AS PAVING SHALL DEVELOP 3000 p.s.i. (MINIMUM) 28 DAYS COMPRESSIVE STRENGTH.

11. ALL UTILITY CONSTRUCTION SHALL BE IN ACCORDANCE WITH THE REQUIREMENTS OF THE LOCAL UTILITY.

12. ENVIRODESIGN ASSOC. INC. SHALL NOT BE RESPONSIBLE FOR THE SAFETY OF THE WORKERS OR THE GENERAL PUBLIC. CONTRACTOR SHALL BE RESPONSIBLE FOR PROVIDING SAFETY TO THE WORKERS IN ACCORDANCE WITH OCCUPATIONAL SAFETY & HEALTH ADMINISTRATIONS (OSHA) REQUIREMENTS AND THE SAFETY OF THE GENERAL PUBLIC.

13. ALL MATERIALS AND WORKMANSHIP MUST BE IN ACCORDANCE WITH THE LOCAL UTILITY STANDARDS AND SPECIFICATIONS.

14. THE CONTRACTOR SHALL CALL SUNSHINE 1-800-432-4770 48 HOURS BEFORE DIGGING FOR FIELD LOCATIONS OF UNDERGROUND UTILITIES.

15. CORRUGATED ALUMINUM PIPE USED BENEATH PAVEMENT SHALL BE IN CONFORMANCE WITH SEC. 8.24.E.5.i

16. ALL CONSTRUCTION ACTIVITY, INCLUDING TRENCHING, IS TO BE A MINIMUM OF SIX FEET FROM THE BASE OF ANY TREE THAT IS DESIGNATED TO REMAIN.

17. ALL LIMEROCK AND BASE MATERIALS SHALL BE REMOVED FROM THE PLANTER AREAS/ISLANDS AND REPLACED WITH APPROPRIATE PLANTING SOIL PRIOR TOT THE LANDSCAPING OF THE SITE.

18. THE REMOVAL OF ANY TREE ON THE SITE IS PROHIBITED WITHOUT THE REQUIRED PERMITS.

19. ALL MATERIALS AND CONSTRUCTION WITHIN THE FDOT RIGHT-OF-WAY SHALL CONFORM TO THE FDOT DESIGN STANDARDS FOR DESIGN, CONSTRUCTION, MAINTENANCE AND UTILITY OPERATIONS ON THE STATE HIGHWAY SYSTEM (LATEST ED.).

20. LANE CLOSURES WITHIN THE FDOT RIGHT-OF-WAY SHALL BE LIMITED TO THE HOURS OF 9AM-3PM, MONDAY-FRIDAY EXCLUDING GOVERNMENTAL HOLIDAYS. MAINTENANCE OF TRAFFIC SHALL BE PROVIDED IN ACCORDANCE WITH INDEX 613 OF THE FDOT DESIGN STANDARDS (LATEST ED.)

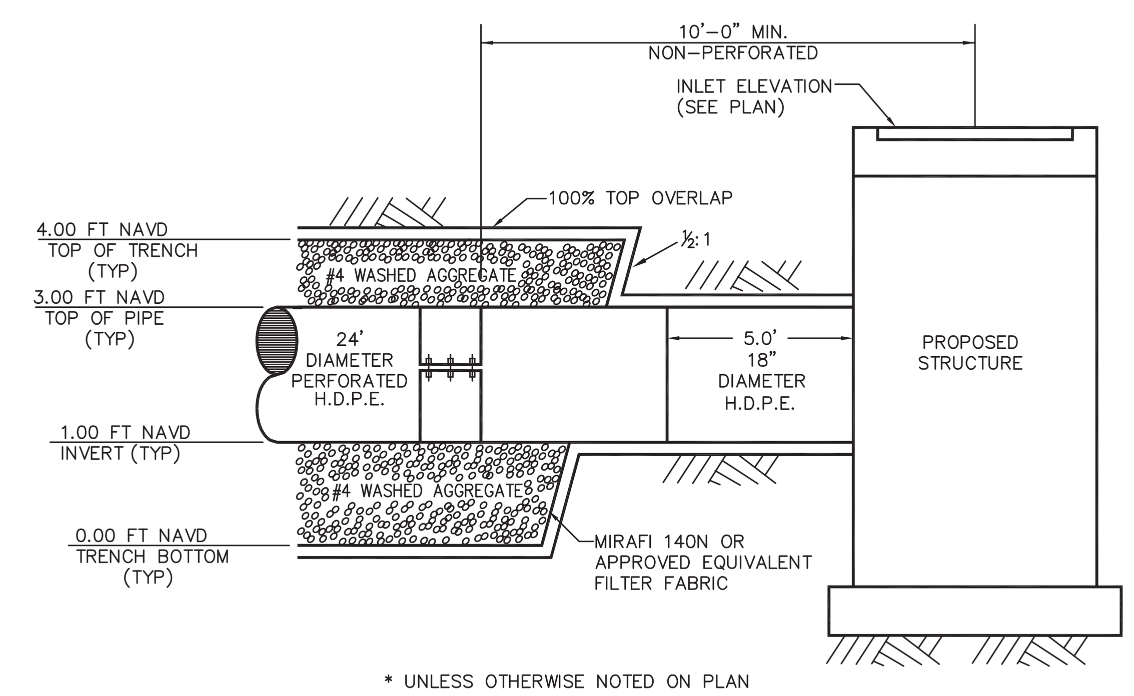

PERFORATED PIPE TRENCH

N.T.S.

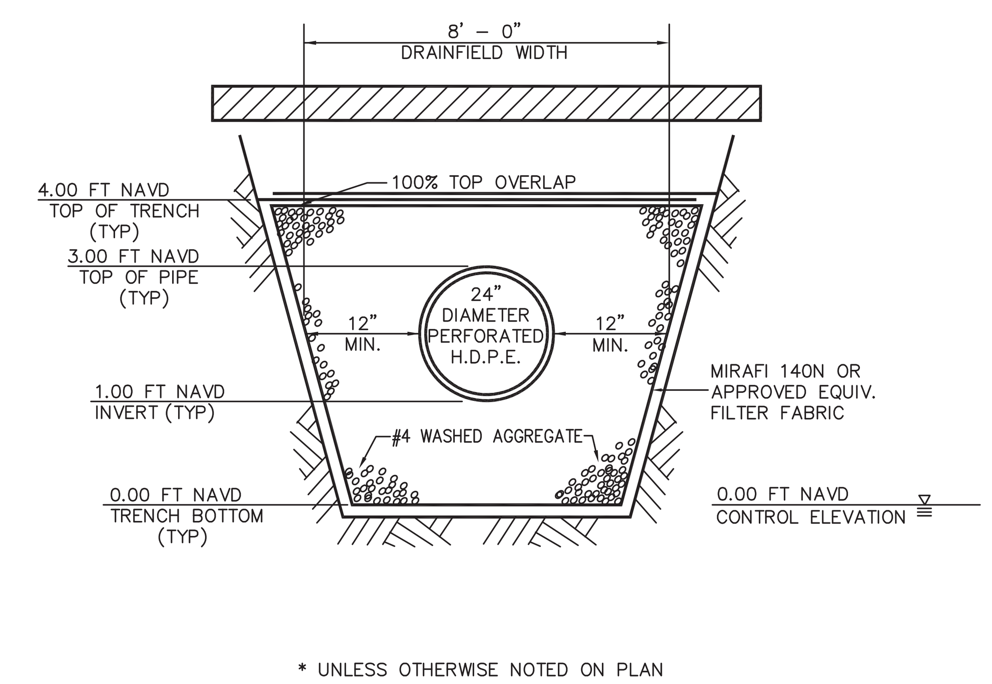

PERFORATED PIPE TRENCH

N.T.S.

Know what's **below.**
Call before you dig.

CALL 48 HOURS BEFORE YOU DIG.

IT'S THE LAW
1-800-432-4770

SUNSHINE STATE ONE CALL OF FLORIDA, INC.

© COPYRIGHT 2015 BY ENVIRODESIGN ASSOCIATES, INC.
THIS DRAWING IS PROVIDED FOR INFORMATIONAL PURPOSES ONLY, UNLESS SIGNED AND SEALED BY A REGISTERED PROFESSIONAL ENGINEER REPRESENTING ENVIRODESIGN ASSOCIATES, INC.

NO.	DATE:	REVISIONS:	BY:
△	.	.	.

NOT VALID WITHOUT ENGINEER'S SEAL
JOSEPH A. PIKE, P.E.
FL REG # 42696
Joseph Pike
2016-01-19 09:32-05:00

PAVING & DRAINAGE DETAILS FOR:
GULFSTREAM HOTEL
LAKE AVENUE
LAKE WORTH, FLORIDA

EnviroDesign Associates Inc.
www.envdesign.com
ENGINEERS • ENVIRONMENTAL CONSULTANTS
FLORIDA CERTIFICATE OF AUTHORIZATION No. 6506
298 Pineapple Grove Way Delray Beach, Florida 33444
Phone: (561) 274-6500 Fax: (561) 274-8558

DRAWN: B.A.B.
CHECKED: J.A.P.
DATE: 12/22/15
JOB NO. 15047-DTL
SHEET NO. 4 OF 6

O:\2015\15047 Gulfstream Hotel Lake Worth- Hudson\DWG\15047-DTL.dwg, 12/22/2015 3:27:43 PM, ARCH D

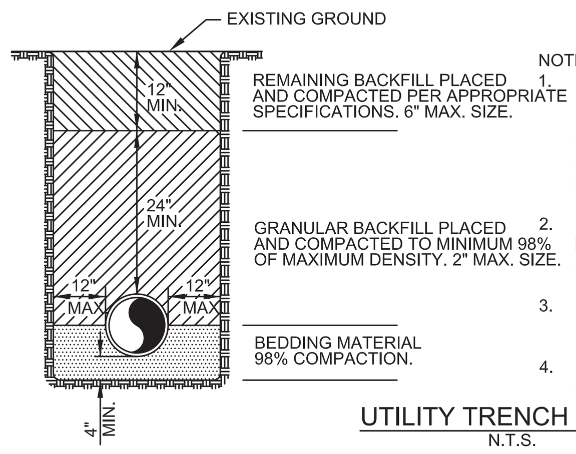

NOTES:
1. BEDDING SHALL CONSIST OF IN-SITU GRANULAR MATERIAL OR WASHED AND GRADED LIMEROCK 3/8" - 7/8" SIZING. UNSUITABLE IN-SITU MATERIALS SUCH AS MUCK, DEBRIS AND LARGER ROCK SHALL BE REMOVED.
2. THE PIPE SHALL BE FULLY SUPPORTED FOR ITS ENTIRE LENGTH WITH APPROPRIATE COMPACTION UNDER THE PIPE HAUNCHES.
3. THE PIPE SHALL BE PLACED IN A DRY TRENCH.
4. BACKFILL SHALL BE FREE OF UNSUITABLE MATERIALS SUCH AS LARGER ROCK, MUCK AND DEBRIS.

UTILITY TRENCH DETAIL
N.T.S.

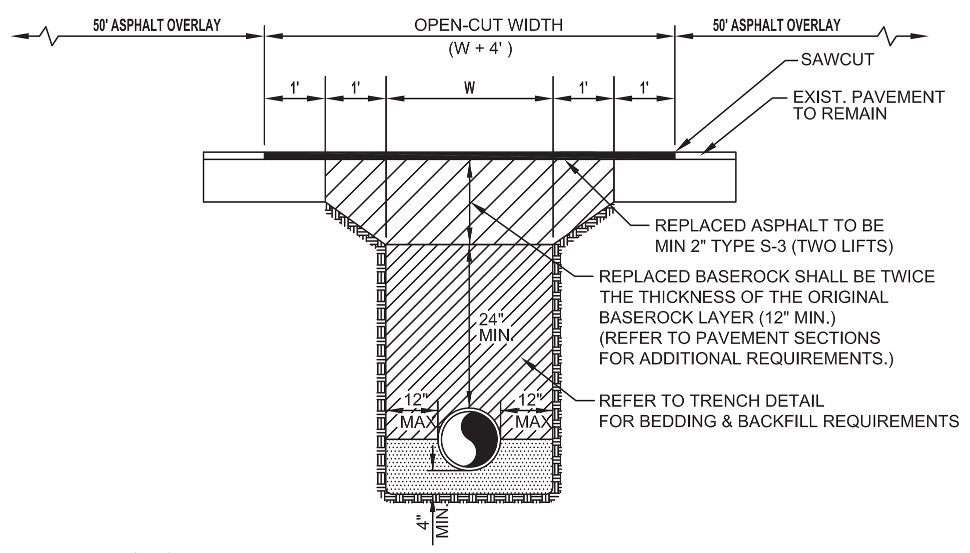

NOTES:
1. PAVEMENT OVERLAY MAY BE REQUIRED IN OPEN-CUT AREAS AT THE DISCRETION OF THE CITY ENGINEER.
2. THE CONTRACTOR SHALL COMPLY WITH APPLICABLE TRENCH SAFETY REGULATIONS.
3. FINISHED SURFACE SHALL HAVE SMOOTH FINISH & SHALL MATCH FLUSH TO SURROUNDING PAVEMENT.
4. ASPHALT OVERLAY SHALL EXTEND A MINIMUM OF 50' BEYOND THE LIMITS OF THE OPEN CUT.

PAVEMENT OPEN-CUT DETAIL
N.T.S.

CITY OF LAKE WORTH PUBLIC SERVICES DEPARTMENT	UTILITY TRENCH AND PAVEMENT OPEN-CUT	DETAIL NO. 21 ISSUED: 09/18/13

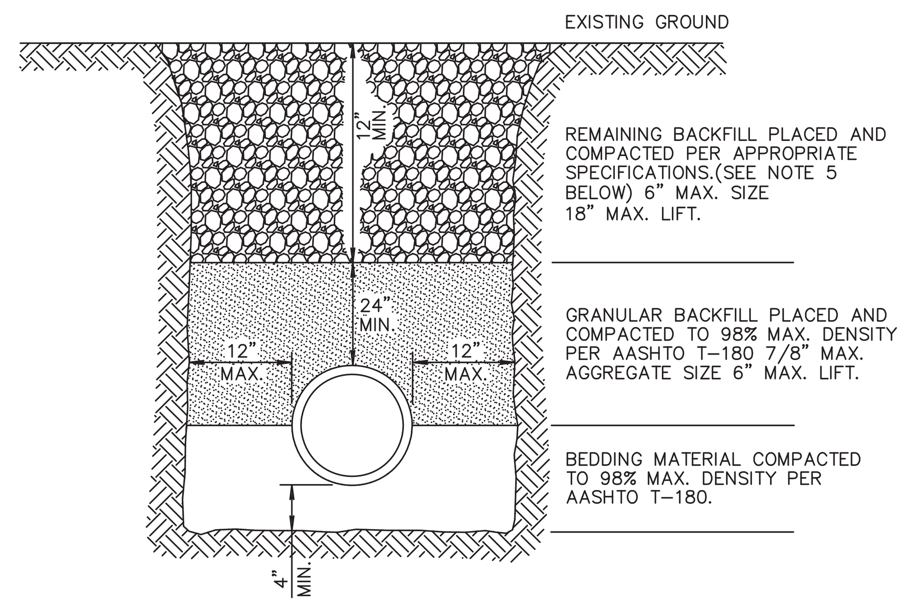

NOTES:
1. UNSUITABLE IN-SITU MATERIALS SUCH AS MUCK, DEBRIS AND LARGE ROCKS SHALL BE REMOVED; BEDDING MATERIAL AND BACKFILL CONSISTING OF WASHED AND GRADED LIMEROCK 3/8" -7/8" SIZING.
2. THE PIPE AND/OR STRUCTURE SHALL BE FULLY SUPPORTED FOR ITS ENTIRE LENGTH WITH APPROPRIATE COMPACTION UNDER THE PIPE HAUNCHES.
3. THE PIPE AND/OR STRUCTURE SHALL BE PLACED IN A DRY TRENCH.
4. BACKFILL SHALL BE FREE OF UNSUITABLE MATERIAL SUCH AS LARGE ROCK, MUCK, AND DEBRIS.
5. COMPACT BACKFILL TO 98% DENSITY UNDER PAVEMENT AND TO 95% DENSITY ELSEWHERE.(AASHTO T-180)
6. COMPACTION AND DENSITY TESTS SHALL BE COMPLETED DURING BACKFILL OPERATIONS, CONTRACTORS NOT FOLLOWING THIS PROCEDURE, FOR WHATEVER REASONS, SHALL BE REQUIRED TO RE-EXCAVATE THE AREA IN QUESTION, DOWN TO THE BEDDING MATERIAL, THEN BACKFILL FOLLOWING THE ABOVE PROCEDURES.

CITY OF LAKE WORTH PUBLIC SERVICES DEPARTMENT	TYPICAL BACKFILL DETAIL	DETAIL NO. 22 ISSUED: 09/18/13

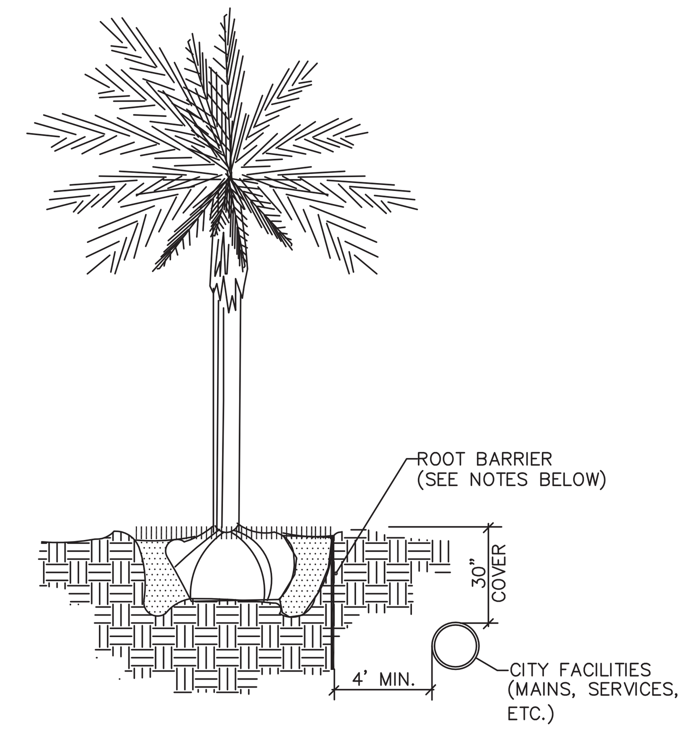

NOTES:
1. ALL ROOT BARRIERS SHALL BE 4' MINIMUM FROM ALL CITY FACILITIES.
2. THE INSTALLATION OF ROOT BARRIERS SHALL BE COORDINATED WITH CITY AND INSPECTED BY CITY PRIOR TO BACKFILLING. ALL ROOT BARRIERS SHALL EXTEND UP TO FINISHED GRADE.
3. ROOT BARRIERS SHALL BE MINIMUM 36" DEEP. APPROVED PRODUCTS INCLUDE "DEEP ROOT" AND "ROOT SOLUTIONS". FLEXIBLE BARRIERS SHALL BE 36" PANELS MANUFACTURED BY BIOBARRIER.
4. ALL ROOT BARRIERS SHALL BE INSTALLED IN ACCORDANCE WITH MANUFACTURERS WRITTEN INSTRUCTIONS.

CITY OF LAKE WORTH PUBLIC SERVICES DEPARTMENT	TYPICAL TREE WITH ROOT BARRIER	DETAIL NO. 23 ISSUED: 09/18/13

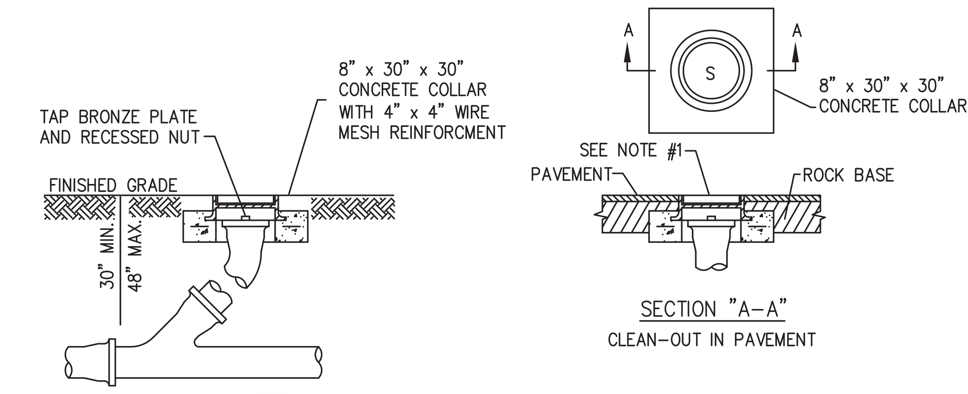

NOTES:
1. U.S. FOUNDRY NO. 7621 REVERSIBLE HANDHOLE RING AND COVER OR APPROVED EQUAL SHALL BE USED, COVER TO BE CAST WITH "S" IN THE CENTER.
2. CLEAN OUT REQUIRED ON ALL SERVICES AT PROPERTY LINE.
3. STANDARD WYE SHALL BE USED AT CLEAN OUT.
4. ALL PIPE AND CLENOUT SHALL BE 6" MIN.

CLEAN OUT | 9

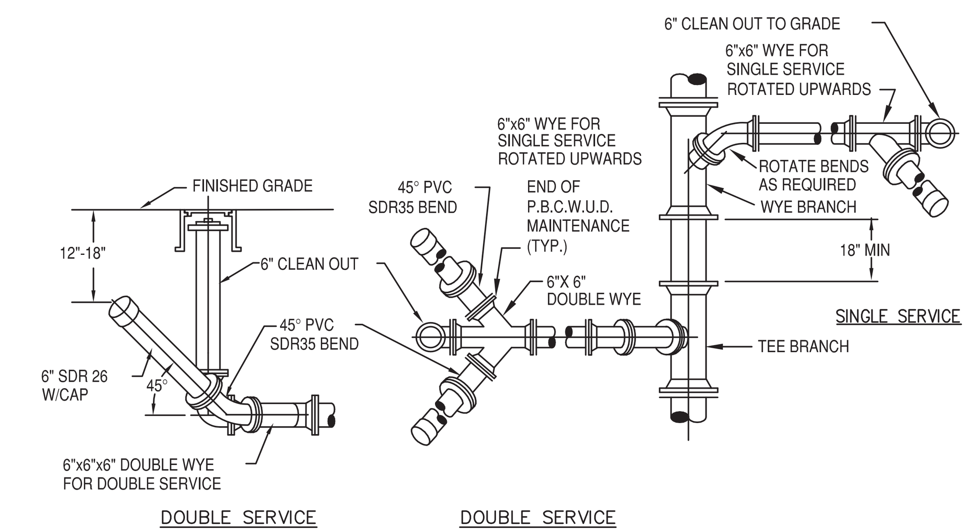

TYPICAL WASTEWATER SERVICE CONNECTION | 10

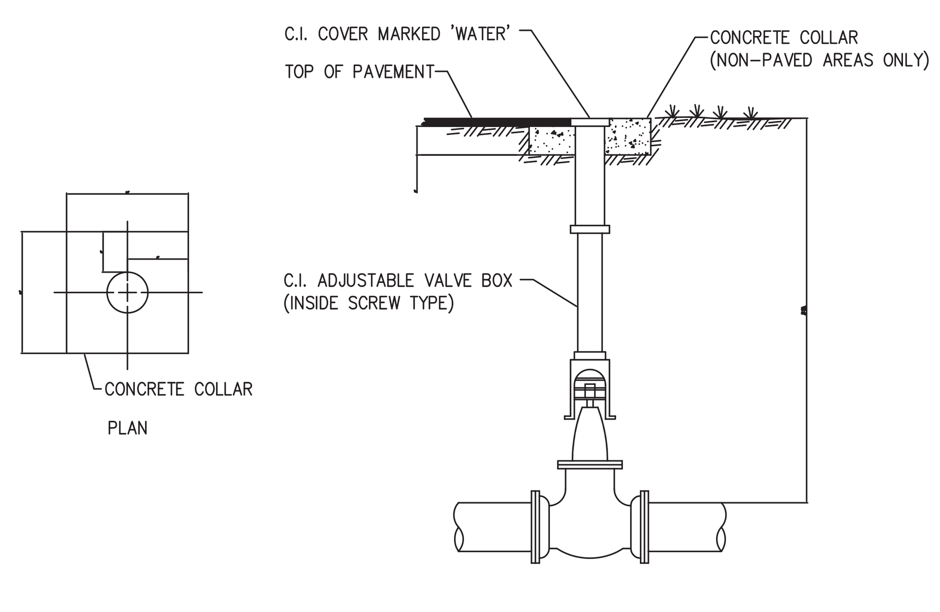

VALVE SETTING | 2

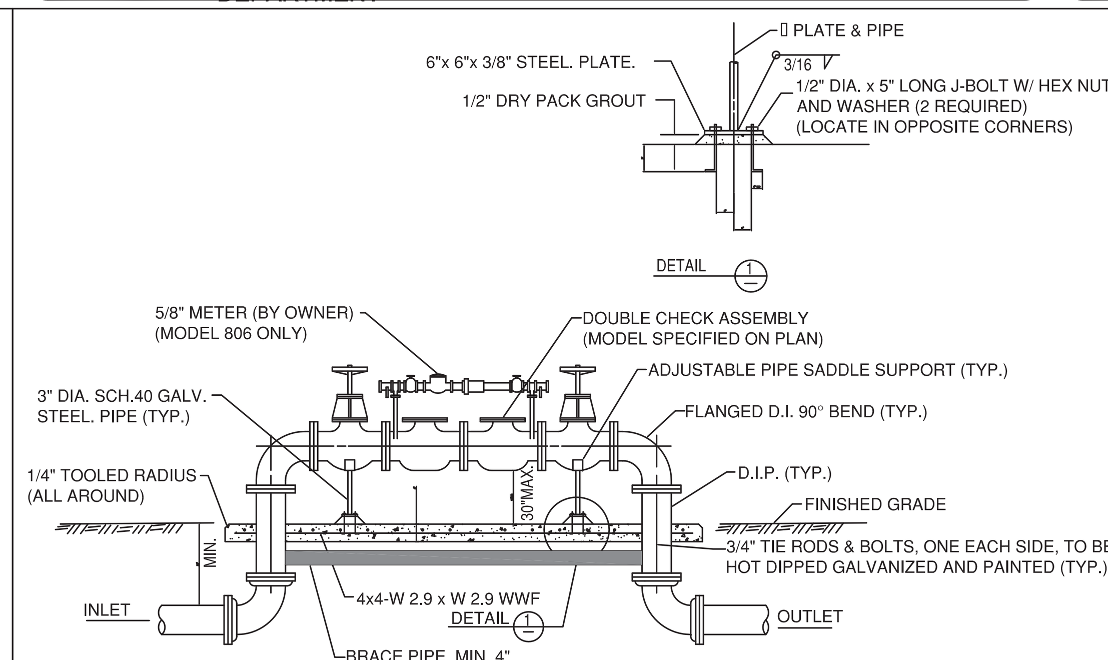

DOUBLE CHECK VALVE ASSEMBLY | 9

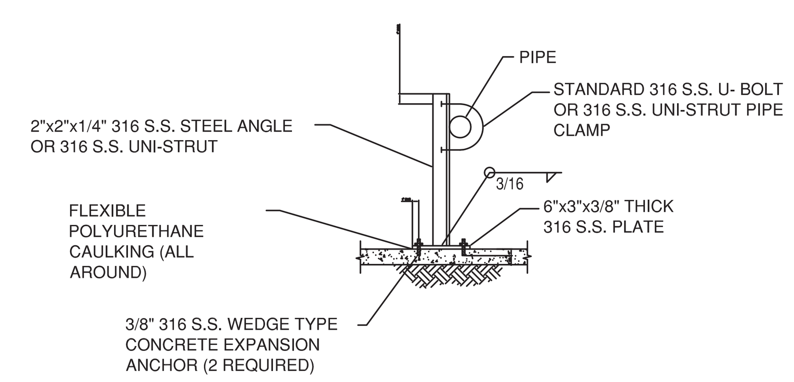

PIPE SUPPORT | 11

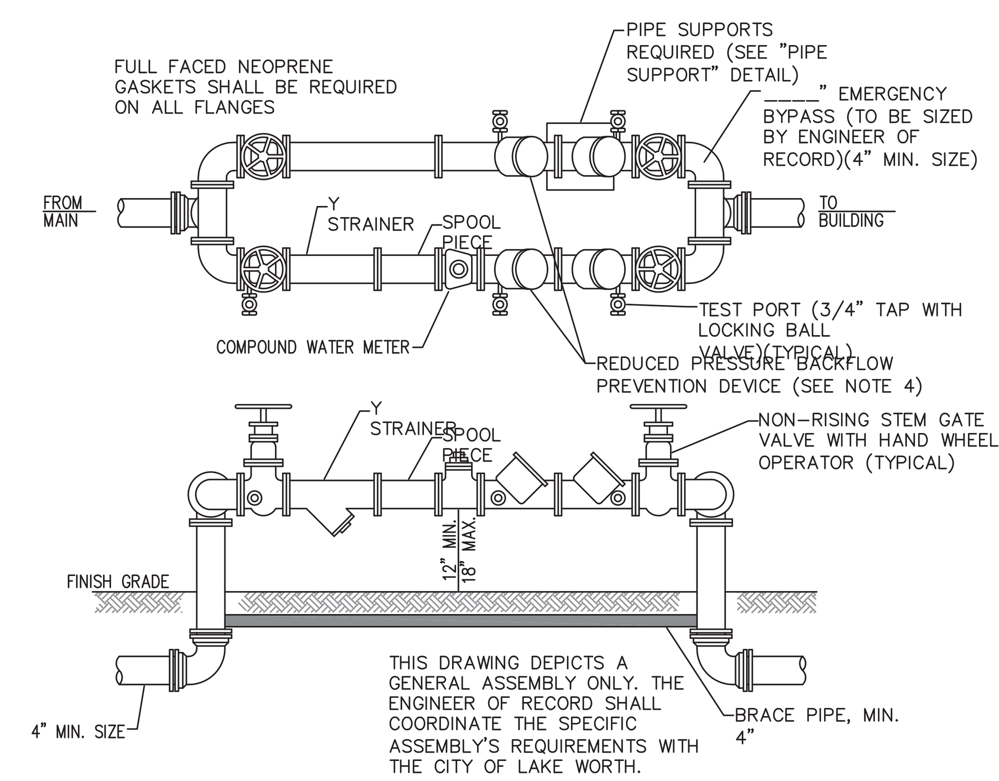

NOTES:
1. MECHANICAL JOINT FITTINGS SHALL BE REQUIRED UNDERGROUND AND FLANGED FITTINGS FOR ABOVE GROUND USE, NO UNIFLANGES PERMITTED.
2. PAINT THE ABOVE GROUND ASSEMBLY IN ACCORDANCE WITH CONSTRUCTION STANDARD, AFTER MANUFACTURERS RECOMMENDED SURFACE PREP IS COMPLETED. DO NOT PAINT OVER NAME/SERIAL PLATE, STAINLESS STEEL OR BRASS FITTINGS.
3. PROTECTIVE PIPE STANCHIONS ARE REQUIRED.
4. APPROVED REDUCED PRESSURE BACKFLOW PREVENTER WITH SILICONE RUBBER SEAL RINGS OR DISKS:
   A. WILKENS MODEL 375 S, 4" TO 10"
   B. AMES MODEL 4000 SSSR, 4" TO 10"
   C. AMES MODEL 4000 SESR, 4" TO 10"
   D. AMES MODEL 4000 SSI, 4" TO 10"
5. 3" METER REQUIRES 4" BACKFLOW ASSEMBLY AND PIPING.
6. ALL TEST PORTS SHALL BE PLUGGED WITH BRASS PLUGS.
7. PROVIDE SPOOL PIECES DIRECTLY IN FRONT OF METER. MINIMUM LENGTH TO BE THREE PIPE DIAMETERS.
8. METER TO BE SUPPLIED BY CONTRACTOR. MODEL NUMBER TO BE DETERMINED BY CITY.

3" AND LARGER METER INSTALLATION AND BACKFLOW ASSEMBLY | 12

TAPPING SADDLE 1" – JCM 402-CC
MULLERS PARTS MATERIAL OR A. Y. McDONALD ONLY

	MULLER	A. Y. McDONALD
CORPORATION STOP	H-15008	XXX
CURB STOP	B-25170	XXX
ANGLE CURB STOP	H-14265	XXX
METER COUPLING – 3/4" OR 1"	H-10890	XXX
U-BRANCH CONNECTION – 1'x 3/4"x 6 1/2"	H-15365	XXX

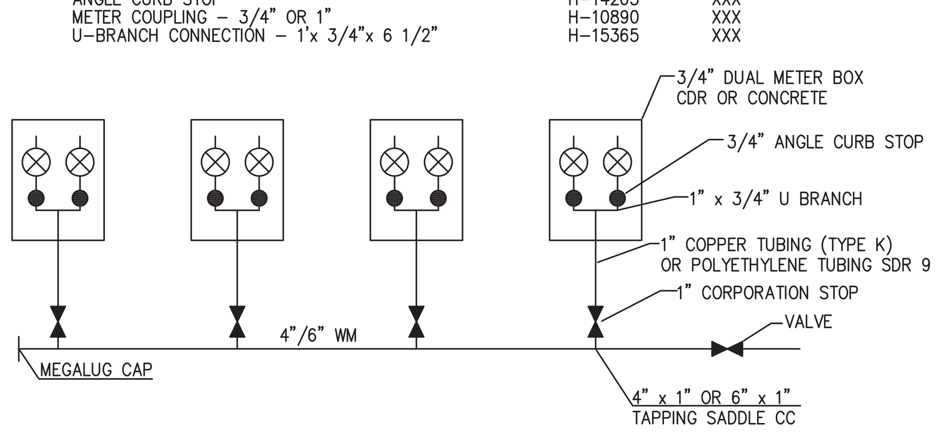

MULTIPLE WATER SERVICES | 1

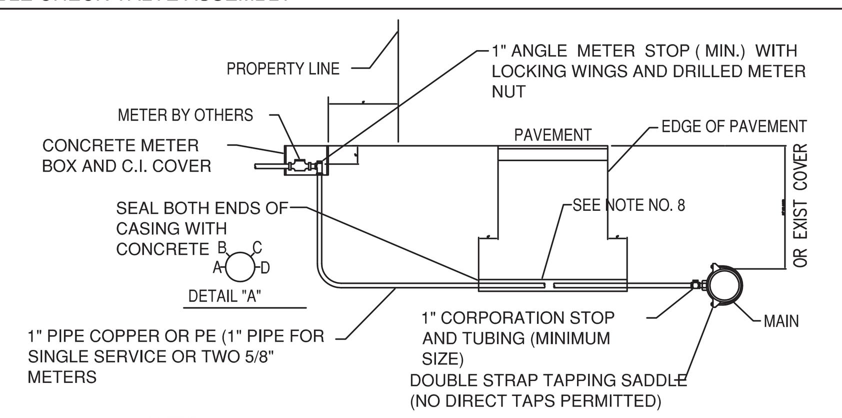

NOTES:
1. SUCCESSIVE TAPS INTO THE WATER MAIN SHALL BE SPACED A MINIMUM OF 18". OFFSET AND AT 45° FROM THE CENTERLINE (ON MAINS WITH GREATER THAN 30" OF COVER. SEE DETAIL 'A').
2. WHERE NO SIDEWALK EXISTS, METER BOXES SHALL BE SET TO CONFORM TO FINISH GRADE..
3. COPPER TUBING SHALL BE TYPE "K" WITH COMPRESSION FITTINGS. POLYETHYLENE TUBING SHALL BE SDR 9, COPPER SIZE TUBING.
4. ROTATE THE CORPORATION STOP SO THAT THE OPERATING NUT IS ACTUATED FROM THE VERTICAL POSITION RATHER THAN THE HORIZONTAL.
5. COPPER SERVICE LINES SHALL BE CONTINUOUS FROM CORPORATION STOP TO ANGLE METER STOP WITH NO FITTINGS IN BETWEEN.
6. TAPPING SADDLES AND CORPORATION STOPS SHALL HAVE CC THREADS.
7. SERVICE CASING SHALL NOT BE INSTALLED BY WATER JETTING UNDER ROADWAY.
8. GALVANIZED CASING REQUIRED FOR JACK AND BORE IN MOST CASES, SCHEDULE 40 PVC MAY BE USED WITH THE APPROVAL OF THE ENGINEER . CASING SHOULD EXTEND SIX (6) FEET BEYOND EDGE OF PAVEMENT AND SIZED AS FOLLOWS
   A. 1" SERVICE USE 2" CASING
   B. 2" SERVICE USE 4" CASING
9. METER BOX TO BE SET TWO FEET BEHIND PROPERTY LINE AND TWO FEET INSIDE SIDE PROPERTY LINE ON EITHER SIDE OF PROPERTY.
10. PIPING LAYOUT SHOWN IS TYPICAL FOR 2" SERVICE.

WATER SERVICE FOR 1" OR 2" PIPE | 2

Know what's **below.**
Call before you dig.

CALL 48 HOURS BEFORE YOU DIG.
IT'S THE LAW
1-800-432-4770
SUNSHINE STATE ONE CALL OF FLORIDA, INC.

© COPYRIGHT 2015 BY ENVIRODESIGN ASSOCIATES, INC.
THIS DRAWING IS PROVIDED FOR INFORMATIONAL PURPOSES ONLY, UNLESS SIGNED AND SEALED BY A REGISTERED PROFESSIONAL ENGINEER REPRESENTING ENVIRODESIGN ASSOCIATES, INC.

NO.	DATE:	REVISIONS:	BY:
△	.	.	.

NOT VALID WITHOUT ENGINEER'S SEAL
JOSEPH A. PIKE, P.E. FL REG. # 42696
Joseph Pike
2016-01-19 09:33-05:00

WATER & WASTEWATER DETAILS FOR:
GULFSTREAM HOTEL
LAKE AVENUE
LAKE WORTH, FLORIDA

EnviroDesign Associates Inc.
www.envdesign.com
ENGINEERS • ENVIRONMENTAL CONSULTANTS
FLORIDA CERTIFICATE OF AUTHORIZATION No. 6506
298 Pineapple Grove Way Delray Beach, Florida 33444
Phone: (561) 274-6500 Fax: (561) 274-8558

DRAWN: B.A.B.
CHECKED: J.A.P.
DATE: 12/22/15
JOB NO. 15047-DTL
SHEET NO. 5 OF 6

O:\2015\15047 Gulfstream Hotel Lake Worth- Hudson\DWG\15047-DTL.dwg, 12/22/2015 3:28:14 PM, ARCH D

1. THE INTENT OF EROSION CONTROL MEASURES INDICATED GRAPHICALLY ON PLANS IS TO PROVIDE A BARRIER TO CONTAIN SILT AND SEDIMENT ON THE PROJECT SITE. THIS REPRESENTATION IS PROVIDED FOR THE CONVENIENCE OF THE CONTRACTOR. THE TEST OF EROSION CONTROL EFFECTIVENESS IS NOT TO BE DETERMINED BY ADHERENCE TO THE REPRESENT SET FORTH ON THE DRAWINGS AND SPECIFICATIONS, BUT BY MEETING THE REGULATIONS SET FORTH BY THE AUTHORITY HAVING JURSDICTION OVER WATER QUALITY CONTROL AND OTHER SEDIMENTATION RESTRICTION REQUIREMENTS IN THE REGION.
2. APPROVED EROSION AND SEDIMENT CONTROL MEASURES SHALL BE INSTALLED PRIOR TO ANY CLEARING GRADING, EXCAVATION, FILLING, OR OTHER LAND DISTURBANCE ACTIVITIES, EXCEPT THOSE OPERATIONS NEEDED TO INSTALL SUCH MEASURES.
3. INSPECTION OF ALL EROSION CONTROL MEASURES SHALL BE CONDUCTED WEEKLY, OR AFTER EACH RAINFALL EVENT. REPAIR, AND/OR REPLACEMENT OF SUCH MEASURES SHALL BE MADE PROMPTY, AS NEEDED.
4. KEEP DUST WITHIN TOLERABLE LIMITS BY SPRINKLING OR OTHER ACCEPTABLE MEANS.
5. ADDITIONAL EROSION AND SEDIMENT CONTROL MEASURES MAY BE REQUIRED IF DEEMED NECESSARY BY ONSITE INSPECTION.
6. FAILURE TO PROPERLY INSTALL AND MAINTAIN EROSION CONTROL PRACTICES SHALL RESULT IN CONSTRUCTION BEING HALTED.
7. DRAINAGE INLETS SHALL BE PROTECTED BY FILTER AND GRADED ROCK AS PER INLET PROTECTION DETAIL.
8. ANY ACCESS ROUTES TO SITE SHALL BE BASED WITH CRUSHED STONE, WHERE PRACTICAL.
9. EROSION CONTROL MEASURES ARE TO BE MAINTAINED UNTIL PERMANENT GROUND COVER IS ESTABLISHED.
10. WHENEVER FEASIBLE, NATURAL VEGETATION SHALL BE RETAINED AND PROTECTED.
11. ALL WORK IS TO BE IN COMPLIANCE WITH THE RULES AND REGULATIONS SET FORTH BY THE STATE OF FLORIDA, DEPARTMENT OF ENVIRONMENTAL PROTECTION AND THE CITY OF DELRAY BEACH.
12. DISCHARGE FROM DEWATERING OPERATIONS SHALL BE RETAINED ONSITE IN A CONTAINMENT AREA.

CITY OF LAKE WORTH PUBLIC SERVICES DEPARTMENT	EROSION CONTROL NOTES DETAIL	DETAIL NO. 25 ISSUED: 09/08/15

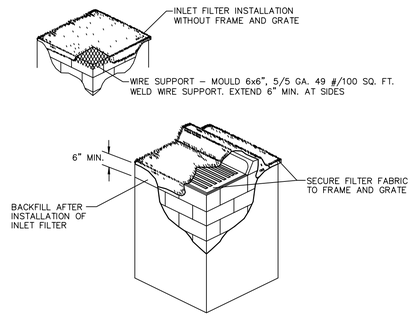

NOT TO SCALE

NOTES:

1. CONTRACTOR IS TO CLEAN INLET FILTER AFTER EVERY STORM.
2. CONTRACTOR TO REMOVE FABRIC JUST PRIOR TO PAVING.

A SEDIMENT TRAP WILL BE EXCAVATED BEHIND THE CURB AT THE INLET. THE BASIN SHALL BE AT LEAST 12 TO 14 INCHES IN DEPTH, APPROXIMATELY 36 INCHES IN WIDTH, AND APPROXIMATELY 7 TO 10 FEET IN LENGTH PARALLEL TO THE CURB.

STORM WATER WILL REACH THE SEDIMENT TRAP VIA CURB CUTS ADJACENT TO EACH SIDE OF THE INLET STRUCTURE. THESE OPENINGS SHALL BE AT LEAST 12 INCHES IN LENGTH. STORM WATER MAY ALSO REACH THE BASIN VIA OVERLAND FLOW LAND AREA BEHIND THE CURB. THE CURB CUTS SHALL BE REPAIRED WHEN THE SEDIMENT TRAP IS REMOVED.

CITY OF LAKE WORTH PUBLIC SERVICES DEPARTMENT	INLET FILTER DETAIL	DETAIL NO. 26 ISSUED: 09/08/15

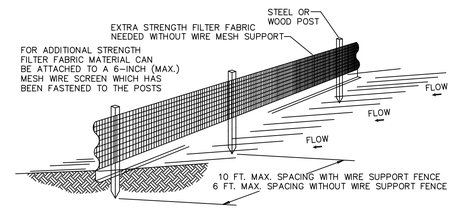

NOTES:

1. THE HEIGHT OF A SILT FENCE SHALL NOT EXCEED 36 INCHES (90 CM).
2. THE FILTER FABRIC SHALL BE PURCHASED IN A CONTINUOUS ROLL CUT TO THE LENGTH OF THE BARRIER TO AVOID THE USE OF JOINTS.
3. POSTS SHALL BE SPACED A MAXIMUM OF 10 FEET (3 M) APART AT THE BARRIER LOCATION AND DRIVEN SECURELY INTO THE GROUND A MINIMUM OF 12 INCHES (30 CM). WHEN EXTRA STRENGTH FABRIC IS USED WITHOUT THE WIRE SUPPORT FENCE, POST SPACING SHALL NOT EXCEED 6 FEET (1.8 M).
4. A TRENCH SHALL BE EXCAVATED APPROXIMATELY 4 INCHES (10 CM) WIDE AND 4 INCHES (10 CM) DEEP ALONG THE LINE OF POSTS AND UPSLOPE FROM THE BARRIER.
5. WHEN STANDARD STRENGTH FILTER FABRIC IS USED, A WIRE MESH SUPPORT FENCE SHALL BE FASTENED SECURELY TO THE UPSLOPE SIDE OF THE POSTS USING HEAVY DUTY WIRE STAPLES AT LEAST 1 INCH (25 MM) LONG, TIE WIRES, OR HOG RINGS. THE WIRE SHALL EXTEND INTO THE TRENCH A MINIMUM OF 2 INCHES (5 CM) AND SHALL NOT EXTEND MORE THAN 36 INCHES (90 CM) ABOVE THE ORIGINAL GROUND SURFACE.
6. THE STANDARD STRENGTH FILTER FABRIC SHALL BE STAPLED OR WIRED TO THE FENCE, AND 8 INCHES (20 CM) OF THE FABRIC SHALL BE EXTENDED INTO THE TRENCH. THE FABRIC SHALL NOT EXTEND MORE THAN 36 INCHES (90 CM) ABOVE THE ORIGIONAL GROUND SURFACE.
7. THE TRENCH SHALL BE BACKFILLED AND THE SOIL COMPACTED OVER THE FILTER FABRIC.
8. ALL PROJECTS REQUIRE SUBMITTAL OF POLLUTION PREVENTION PLAN (PPP).
9. ALL PROJECTS 1 AC. OR MORE MUST SUBMIT NOTICE OF INTENT (NOI) TO FDEP.

CITY OF LAKE WORTH PUBLIC SERVICES DEPARTMENT	SILT FENCE INSTALLATION DETAIL	DETAIL NO. 27 ISSUED: 09/08/15

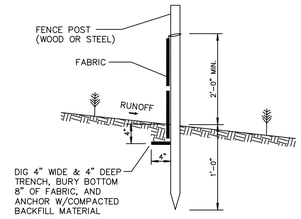

SILT FENCE SECTION
NOT TO SCALE

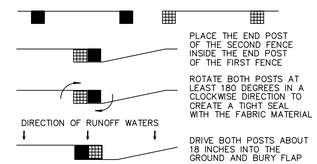

ATTACHING TWO SILT FENCES
NOT TO SCALE

CITY OF LAKE WORTH PUBLIC SERVICES DEPARTMENT	SILT FENCE INSTALLATION DETAIL	DETAIL NO. 28 ISSUED: 09/08/15

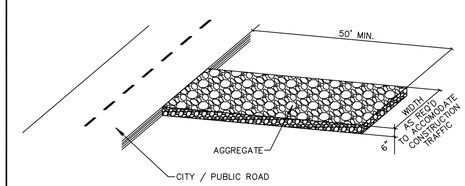

NOTE:
A CONSTRUCTION ENTRANCE SHALL BE CONSTRUCTED AND CONTAIN AN AGGREGATE LAYER (FDOT AGGREGATE NO.1), AT LEAST 6–INCHES THINK. IT MUST EXTEND TO THE WIDTH OF THE VEHICULAR INGRESS AND EGRESS AREA.
CITY/ PUBLIC ROAD TO BE KEPT FREE OF DEBRIS AND AGGREGATE

CITY OF LAKE WORTH PUBLIC SERVICES DEPARTMENT	STABILIZED CONSTRUCTION ENTRANCE DETAIL	DETAIL NO. 29 ISSUED: 09/08/15

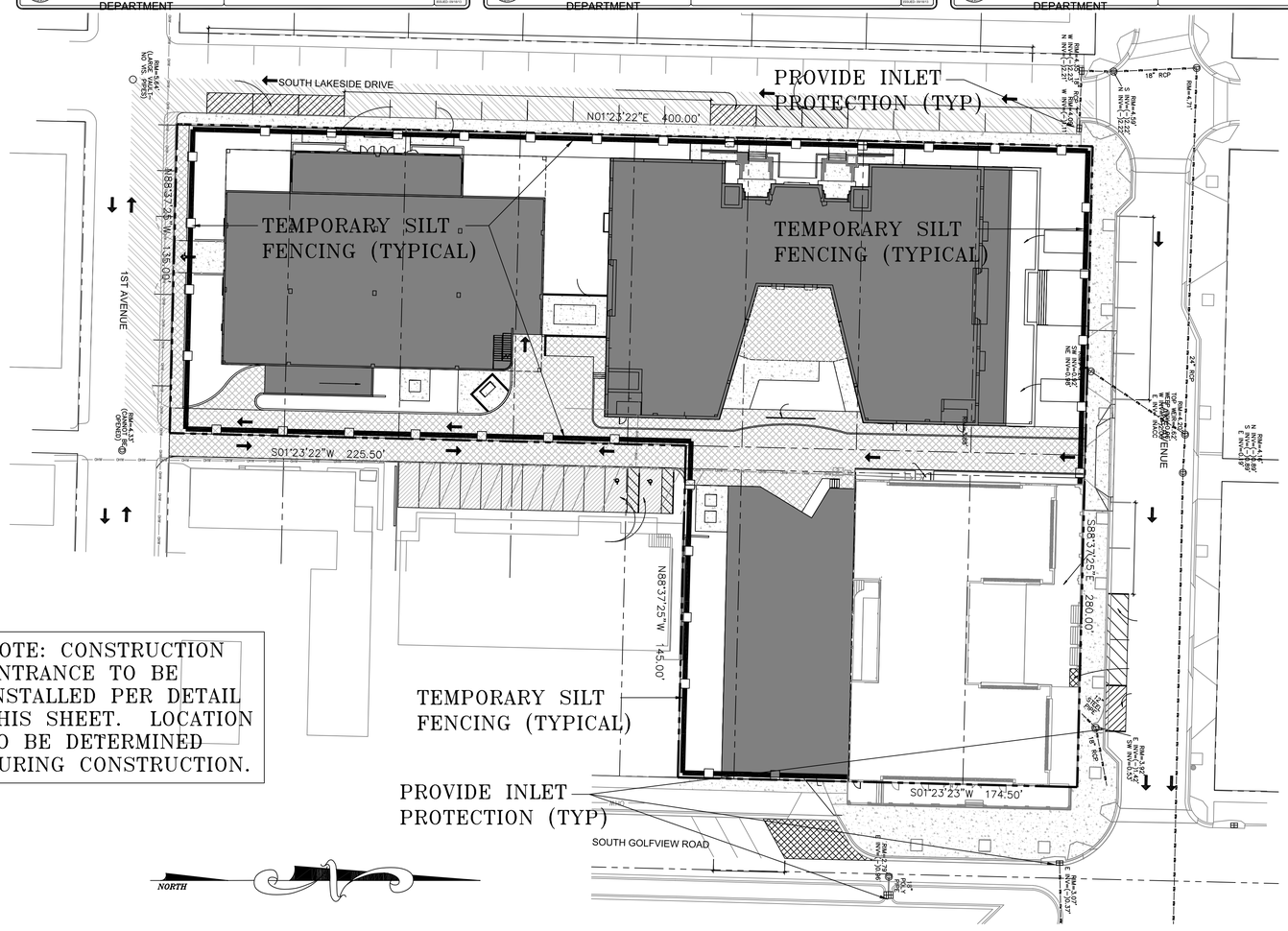

NOTE: CONSTRUCTION ENTRANCE TO BE INSTALLED PER DETAIL THIS SHEET. LOCATION TO BE DETERMINED DURING CONSTRUCTION.

CALL 48 HOURS BEFORE YOU DIG.
IT'S THE LAW
1–800–432–4770
SUNSHINE STATE ONE CALL OF FLORIDA, INC.

811 Know what's below. Call before you dig.

SCALE: 1" = 40'

© COPYRIGHT 2015 BY ENVIRODESIGN ASSOCIATES, INC.
THIS DRAWING IS PROVIDED FOR INFORMATIONAL PURPOSES ONLY, UNLESS SIGNED AND SEALED BY A REGISTERED PROFESSIONAL ENGINEER REPRESENTING ENVIRODESIGN ASSOCIATES, INC.

NO.	DATE:	REVISIONS:	BY:
1	1/28/16	SIDEWALK ADJUSTMENT ALONG 1ST AVE.	BAB

NOT VALID WITHOUT ENGINEER'S SEAL

JOSEPH A. PIKE, P.E.
FL REG # 42696

POLLUTION PREVENTION PLAN FOR:
GULFSTREAM HOTEL
LAKE AVENUE
LAKE WORTH, FLORIDA

EnviroDesign Associates Inc.
www.envirodesign.com
ENGINEERS • ENVIRONMENTAL CONSULTANTS
FLORIDA CERTIFICATE OF AUTHORIZATION No. 6506
298 Pineapple Grove Way Delray Beach, Florida 33444
Phone: (561) 274-6500 Fax: (561) 274-8558

DRAWN: B.A.B.
CHECKED: J.A.P.
DATE: 2/04/16
JOB NO. 15047–ENG
SHEET NO. 6 OF 6

O:\2015\15047 Gulfstream Hotel Lake Worth– Hudson\DWG\15047–ENG.dwg, 2/4/2016 12:41:34 PM, ARCH D

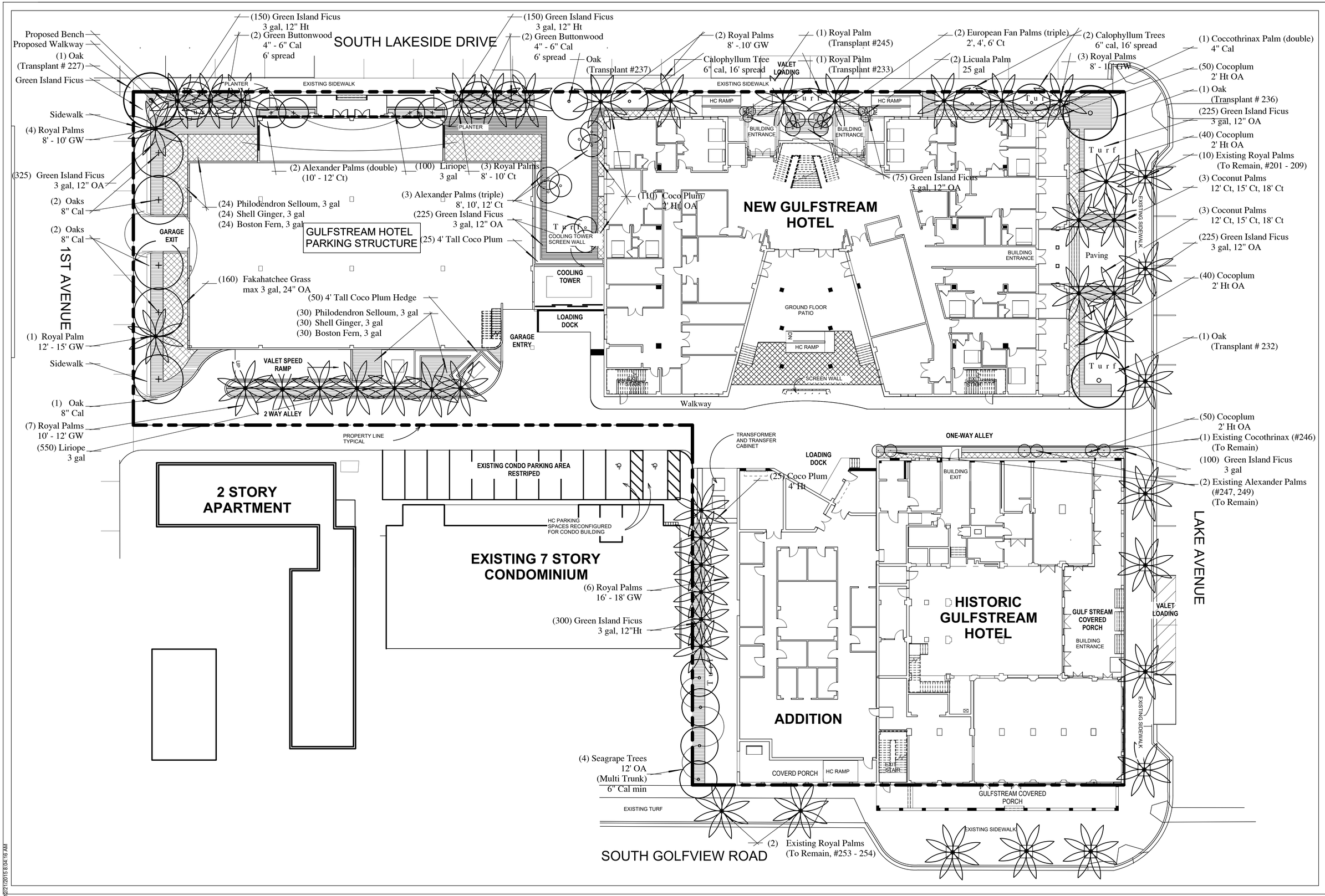

DON SKOWRON INCORPORATED
donskowron@mc.com
la6666674

SCALE: 1/16" = 1'-0"

GULFSTREAM HOTEL
PALM BEACH COUNTY
LAKE WORTH, FLORIDA

LANDSCAPE PLAN

DATE ISSUED:
February 4, 2016

DATE PLOTTED:
FEBRUARY 4, 2016

L1

12/21/2015 8:04:16 AM

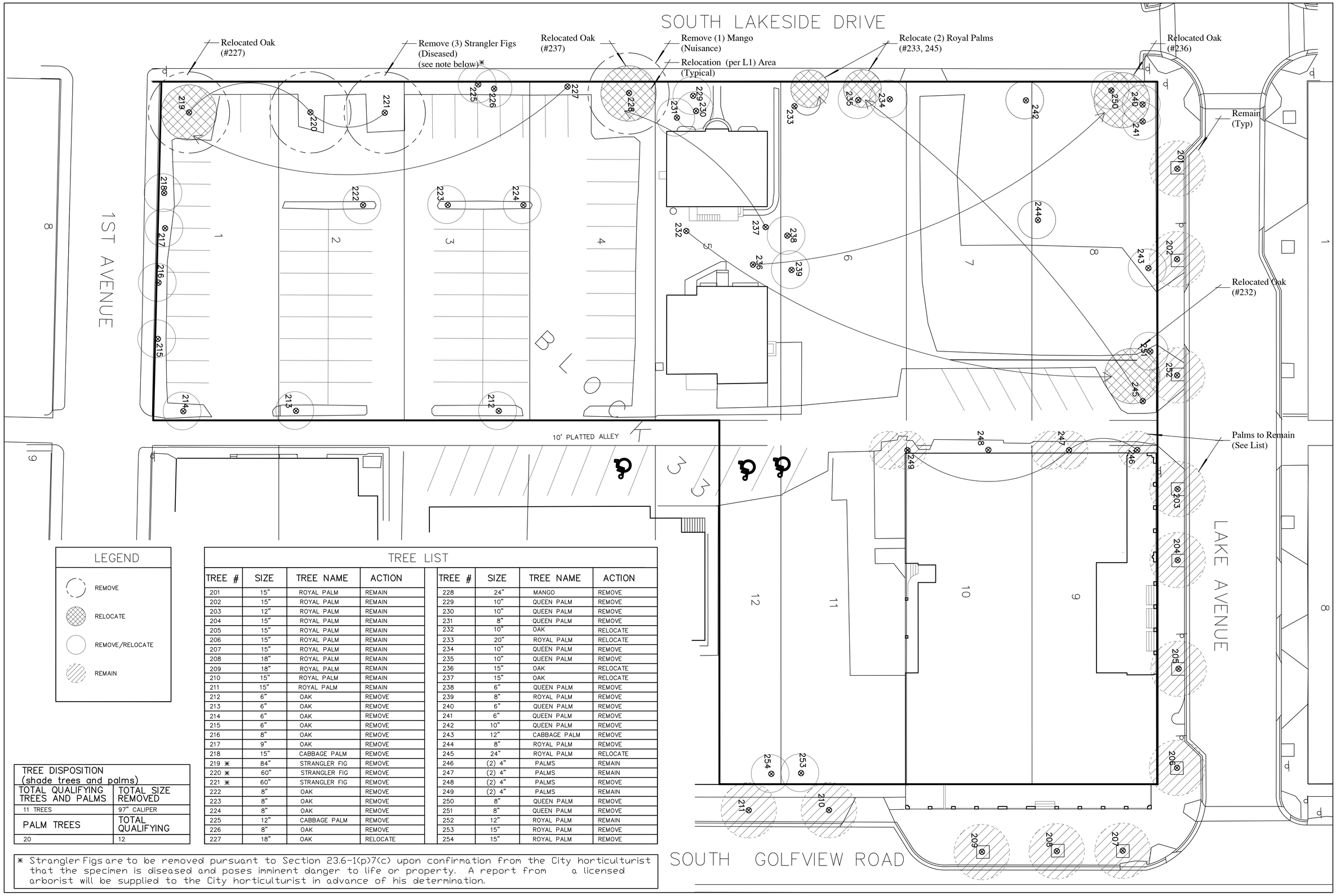

LEGEND

- REMOVE
- RELOCATE
- REMOVE/RELOCATE
- REMAIN

TREE DISPOSITION (shade trees and palms)	
TOTAL QUALIFYING TREES AND PALMS	TOTAL SIZE REMOVED
11 TREES	97" CALIPER
PALM TREES	TOTAL QUALIFYING
20	12

TREE LIST

TREE #	SIZE	TREE NAME	ACTION	TREE #	SIZE	TREE NAME	ACTION
201	15"	ROYAL PALM	REMAIN	228	24"	MANGO	REMOVE
202	15"	ROYAL PALM	REMAIN	229	10"	QUEEN PALM	REMOVE
203	12"	ROYAL PALM	REMAIN	230	10"	QUEEN PALM	REMOVE
204	15"	ROYAL PALM	REMAIN	231	8"	QUEEN PALM	REMOVE
205	15"	ROYAL PALM	REMAIN	232	10"	OAK	RELOCATE
206	15"	ROYAL PALM	REMAIN	233	20"	ROYAL PALM	RELOCATE
207	15"	ROYAL PALM	REMAIN	234	10"	QUEEN PALM	REMOVE
208	18"	ROYAL PALM	REMAIN	235	10"	QUEEN PALM	REMOVE
209	18"	ROYAL PALM	REMAIN	236	15"	OAK	RELOCATE
210	15"	ROYAL PALM	REMAIN	237	15"	OAK	RELOCATE
211	15"	ROYAL PALM	REMAIN	238	6"	QUEEN PALM	REMOVE
212	6"	OAK	REMOVE	239	8"	ROYAL PALM	REMOVE
213	6"	OAK	REMOVE	240	6"	QUEEN PALM	REMOVE
214	6"	OAK	REMOVE	241	6"	QUEEN PALM	REMOVE
215	6"	OAK	REMOVE	242	10"	QUEEN PALM	REMOVE
216	8"	OAK	REMOVE	243	12"	CABBAGE PALM	REMOVE
217	9"	OAK	REMOVE	244	8"	ROYAL PALM	REMOVE
218	15"	CABBAGE PALM	REMOVE	245	24"	ROYAL PALM	RELOCATE
219 *	84"	STRANGLER FIG	REMOVE	246	(2) 4"	PALMS	REMAIN
220 *	60"	STRANGLER FIG	REMOVE	247	(2) 4"	PALMS	REMAIN
221 *	60"	STRANGLER FIG	REMOVE	248	(2) 4"	PALMS	REMOVE
222	8"	OAK	REMOVE	249	(2) 4"	PALMS	REMAIN
223	8"	OAK	REMOVE	250	8"	QUEEN PALM	REMOVE
224	8"	OAK	REMOVE	251	8"	QUEEN PALM	REMOVE
225	12"	CABBAGE PALM	REMOVE	252	12"	ROYAL PALM	REMAIN
226	8"	OAK	REMOVE	253	15"	ROYAL PALM	REMOVE
227	18"	OAK	RELOCATE	254	15"	ROYAL PALM	REMOVE

* Strangler Figs are to be removed pursuant to Section 23.6-1(p)7(c) upon confirmation from the City horticulturist that the specimen is diseased and poses imminent danger to life or property. A report from a licensed arborist will be supplied to the City horticulturist in advance of his determination.

DON SKOWRON INCORPORATED
donskowron@mc.com
fa6666674

TREE RELOCATION PLAN / TREE SURVEY / DISPOSITION PLAN SCALE: 1/16" = 1'-0"

GULFSTREAM HOTEL
PALM BEACH COUNTY
LAKE WORTH, FLORIDA

DATE ISSUED:
January 18, 2016

DATE PLOTTED:
FEBRUARY 4, 2016

N

L2

LANDSCAPE SPECIFICATIONS

LANDSCAPE SPECIFICATONS

PART 1: GENERAL CONDITIONS

1.01 SCOPE:
The landscape contract includes the supplying & planting of all trees, shrubs, vines, & groundcovers together with all necessary labor, equipment, tools & materials needed for the successful completion, execution & maintenance of the landscape plans.

1.02 AGENCY STANDARDS:
Grades & standards of plant materials to be used shall be true to name. Size, condition, & graded Florida #1 or better as stated in: Grades & Standards of Florida Plant Materials published by the State of Florida Department of Agriculture, Tallahassee, Florida.

1.03 SITE EXAMINATION:
The Landscape Contractor shall personally examine the site & fully acquaint him/herself with all of the existing conditions in order that no misunderstandings may afterwards arise as to the character or extent of the work to be performed, and additionally, in order to acquaint themselves with all precautions to be taken in order to avoid injury to property or persons. No additional compensation will be granted because of any unusual difficulties which may be encountered in the execution or maintenance of any portion of the work.

1.04 ERRORS & OMISSIONS:
The plant list is a part of the drawings & is furnished as a convenience. The plant list indicates the name, size & quantities of specific plant materials as called for and are located on the drawings. The Landscape Contractor is responsible for their own quantity count and any discrepancy between drawings and plant list shall be considered as correct on the drawings.

The Landscape Contractor shall not take advantage of errors or omissions in the specifications or contract drawings. Full instruction shall be given if such errors are discovered. Upon discovery of any discrepancies in, or omissions from the drawings or documents, or should the Landscape Contractor be in doubt as to their meaning, the Landscape Architect shall be notified & will determine the actions necessary to each query.

If plans & specifications are found to disagree after the contract is awarded, the Landscape Architect shall be the judge as to which was intended.

1.05 EXECUTION OF THE WORKS:
The Landscape Contractor shall have his labor crews controlled & directed by a Foreman well versed in plant materials, planting methods, reading blueprints & coordination between job & nursery in order to execute installation correctly & in a timely manner.

The Landscape Contractor shall provide a competent English speaking Superintendent on the project at all times, who shall be authorized as the Contractor's agent on the work. The Superintendent shall be capable of reading & understanding the Plans, Specifications & other Contract Documents. If the Superintendent is deemed incompetent by the Landscape Architect, the superintendent shall be immediately replaced. The Landscape Contractor shall be available for any meetings with the Owner and/or Landscape Architect during implementation of the job. Any additional work or changes required as a result of failure to communicate with the Owner or Landscape Architect during implementation will be the responsibility of the Landscape Contractor.

1.06 PROTECTION OF PUBLIC PROPERTY:
The Landscape Contractor shall protect all materials & work against injury from any cause & shall provide & maintain all necessary safeguards for the protection of the public. The Landscape Contractor shall be held responsible for any damage or injury to persons or property which may occur as a result of their fault or negligence in the execution of the work, i.e. damage to underground pipes or cables.

1.07 CHANGES & EXTRAS:
The Landscape Contractor shall not start on any changes or extras in the project until a written agreement setting forth the adjusted prices has been executed between the Owner & the Contractor. Any work performed on changes or extras prior to execution of a written agreement may or may not be compensated for by the Owner at his discretion.

1.08 GUARANTEE:
The Landscape Contractor shall furnish a written guarantee warranting all materials, workmanship & plant materials, except sod, for a period of ONE (1) Year from the time of completion & acceptance by the Landscape Architect & Owner. Sod shall be guaranteed for a period of 90 calendar days after acceptance by the Landscape Architect and Owner. All plant material shall be alive & in satisfactory condition & growth for each specific kind of plant at the end of the guarantee period. The guaranteeing of plant material shall be construed to mean complete and immediate replacement with plant material of the same variety, type, size, quality and grade as that of the originally specified plant. During the guarantee period it shall, be the Landscape Contractor's responsibility to immediately replace any dead or unhealthy material as determined by the Landscape Architect. The guarantee will be null & void if plant material is damaged by lightning, hurricane force winds, or any other acts of God, as well as vandalism or lack of proper maintenance.

At the end of the specified guarantee period, any plant required under this contract that is dead or not in satisfactory condition, as determined by the Landscape Architect, shall be replaced. The Landscape Contractor shall be responsible for the full replacement cost of plant materials for the first replacement & share subsequent replacement costs equally with the Owner, should replacement plant fail to survive.

1.09 CARE & MAINTENANCE:
The Landscape Contractor shall be responsible for the care & maintenance of all plant materials until final acceptance by the Owner or Landscape Architect.

Upon final acceptance of the work, the Landscape Contractor shall furnish the Owner with a written & detailed description for the care & maintenance of all plant material at the time of final acceptance.

The Owner agrees to execute the instructions for such care & maintenance.

1.10 SAFETY:
It shall be the responsibility of the Landscape Contractor to protect all persons from injury & to avoid property damage. Adequate warning devices shall be placed and maintained during the progress of all works.

It shall be the contractor's responsibility to conform to all local, state, & federal safety laws & codes including the Federal Occupational Safety & Health Act (OSHA).

1.11 CONTRACTOR QUALIFICATION:
The Owner may require the apparent contractor to qualify themselves to be a responsible entity by furnishing any or all of the following documentary data:

a) A financial statement showing assets & liablities of the company current to date.
b) A listing of not less than (3) completed projects of similar scope & nature.
c) Permanent name & address of place of business.
d) The number of regular employees of the organization & length of time the organization has been in business under the present name.

1.12 PERMITS, CERTIFICATES & BUILDING CODES:
All contractors shall secure & pay for all permits & certificates required for their class of work and to ensure that all constructions conform to all applicable portions of the state & local building codes.

1.13 INSURANCE & BONDING:
The Contractor(s) shall submit proof of insurance for this job for the time period that the work is done. The minimum amount of insurance shall be $300,000, per person & $300,000, per aggregate. The successful bidder shall be required to have this coverage in effect before beginning work on the site.

The Owner shall have the right to require the Contractor to furnish bonds covering faithful performance of the Contract & payment obligations arising hereunder as stipulated in bidding requirements or specifically required in the Contract Documents on the date of execution of the Contract.

1.14 INVOICING AND PAYMENT:

The Owner shall make progress payments on account of the Contract Sum as provided below and elsewhere in the contract documents:

All invoices shall be submitted to Landscape Architect for approval before forwarding to Owner.

The period covered by each Invoice shall cover one calendar month ending on the last day of the month. Payment for the submitted Invoice shall be made not later than 14 (fourteen) days after the Landscape Architect has received the Invoice for review.

Invoices shall be computed as follows:
Indicate the percentage of completion as of the end of the period covered. by the Invoice. Multiply that percentage by the total Contract Sum.

a) Add amounts, if any, additional amounts payable if final completion of the work is materially delayed through no fault of the Contractor.
b) Subtract the aggregate of previous payments made by the Owner.
c) Subtract the retainage of 10%.
d) Subtract amounts, if any, for work that has been deemed unacceptable by Landscape Architect.

Final Payment, constituting the entire unpaid balance of the contract sum, less 10% retainage, shall be made by the Owner to the Contractor when the Contractor has fully performed the Contract.

Payment of the 10% retainage shall be made by the Owner to the Contractor when:

a) 5% shall be paid upon completion of the punch list.
b) 5% shall be paid at the end of the specified guarantee period.

PART 2: MATERIALS

2.01 PLANT MATERIALS:
A complete list of plants is shown on the drawings, including a schedule of quantities, sizes, and such requirements deemed necessary. In the event discrepancies occur, the specifications on the drawings shall govern. All nomenclature standards to be Betrock's Guides for Landscape Plants & Palms.

Substitutions: Substitutions of plant materials or changes in size or spacing of materials will be permitted ONLY upon written authorization by the Owner or the Landscape Architect. If plant material is not of sufficient size to meet applicable codes, a letter of variance from the appropriate agency must be obtained by the Contactor prior to issuance of any change order. If material of smaller size is to be accepted, the quantity of material shall be increased, at no additional cost to the Owner, to meet the intent of the drawings. All plant materials shall have a habit of growth that is normal for the species & shall be healthy, vigorous & equal to or exceed the measurements specified in the plant list, which are the minimum acceptable sizes. Plants shall be measured before pruning with branches in normal position. Ant necessary pruning shall be done at time of planting.

All plant materials shall be nursery grown, unless otherwise noted, Florida#1 or better & shall comply with all required inspections, grading standards & plant regulations as set forth by the Florida Dept. of Agriculture s Grades & Standards for Nursery Plants.

Plants that do not have the normal balance of height & spread typical for the respective plant shall not be acceptable.

The Landscape Contractor shall install each plant to display its best side. Adjustments may be required if plants are not installed properly &/or approved by the Landscape Architect.

2.02 INSPECTION:
The Landscape Architect & Owner may inspect trees & shrubs at the nursery or at site prior to planting, for compliance with requirements for genus, species, variety, size & quality. The Landscape Architect & Owner shall retain the right to further inspect trees & shrubs for size & condition of balls & root systems, insects, injuries & latent defects, and to reject unsatisfactory or defective material at any time during progress of work. Rejected plant materials shall be immediately removed from the project site.

2.03 PROTECTION OF PLANT MATERIALS:
Balled & burlapped plants (B&B) shall be dug with firm natural balls of earth of sufficient diameter & depth to encompass the fibrous & feeding root system necessary for full recovery of the plant. Balls shall be firmly wrapped w/burlap similar materials & bound with biodegradable rope. All collected plants shall be balled & burlapped.

Plants with broken, damaged or insufficient balls will be rejected.

All plant materials shall be protected from possible bark injury or breakage of branches. All plants transported by open trucks shall be adequately covered to prevent windburn, drying or damage to plants.

Plants which cannot be planted immediately on delivery to the site shall be covered with moist soil, mulch or other protection from the drying of wind & sun. All plants shall be watered as necessary by the Landscape Contractor until planted.

2.04 STORAGE:
All plant materials shall be stored on the site in designated areas, specified by the Landscape Architect or Owner's Agent.

No plant material shall be stored for longer than 72 hours.

The Landscape Architect reserves the right to reject any plant materials not in conformance with these specifications.

All rejected material shall be immediately removed from the site & replaced with acceptable material at no cost to the Owner.

2.05 PROTECTON DURING PLANTING:
Trees moved by winch or crane shall be thoroughly protected from chain marks, girdling or bark slippage by means of burlap, wood battens or other approved methods. Battens shall NEVER be attached to the trees with nails.

2.06 PLANTING SOIL:
Planting soil shall be sandy loam & shall contain a minimum of 25% decomposed matter. Soil shall be free of debris, roots, clay, stones, plants or other foreign materials which might be a hindrance to planting operations or be detrimental to good growth.

2.07 FERTILIZER:
Commercial fertilizer shall comply with the state fertilizer laws. Nitrogen shall be less than 40 organic source. Inorganic chemical nitrogen shall not be derived from the sodium form of nitrate. Fertilizers shall be delivered to the site in unopened original containers, each bearing the manufacturers guaranteed analysis. Any fertilizer which has become caked or otherwise damaged shall be rejected.

To each cubic yard of planting soil shall be added and thoroughly mixed 3 lbs. of commercial fertilizer.

Tabletized fertilizer shall be Agriform planting tablets 20-10-5 formula, 21 gram. All shrubs & trees shall be fertilized with tabletized fertilizer as follows. While backfilling plant holes, fertilizer tablets shall be equally spaced & placed adjacent to the ball midway in depth in accordance with the following rates:

1 gallon container - 1 tablet
3 gallon container - 2 tablets
5 gallon container - 3 tablets
7 gallon container - 5 tablets

Large tubs, wire baskets, grow bags & balled & burlapped material shall have 1 tablet for each 1/2 inch of trunk diameter (measured 3 feet from the ground) or for each foot of height or spread of larger shrub material. The Landscape Architect reserves the right to inspect & review the application of fertilizer.

2.08 MULCH:
Mulch material shall be grade B+ or better and consist of a renewable or non-threatened source, free of weeds, seeds & pests; moistened at the time of application to prevent wind displacement.

All trees and shrub beds shall receive 3" mulch immediately after planting & thoroughly watered.

PART 3: EXECUTION OF WORKS

3.01 DIGGING:
The Landscape Contractor shall contact 'NO CUTS' or similar agency prior to any digging to ascertain utility locations. The Landscape Contractor to exercise care in digging & other works so as to not damage existing work, including overhead wires, underground pipes & cables & the pipes & hydrants of watering systems. Should such overhead or underground pipes & cables be encountered which interfere with planting, the Owner shall be consulted & will adjust the location of plants to clear such obstruction. The Contractor shall be responsible for the immediate repair of any damage caused by his work.

3.02 GRADING:
Grading for drainage, swales, etc. to within 4 inches of the finished grade to be provided by others.

It shall be the responsibility of the Landscape Contractor to provide the final grading during the course of landscape installation so as to bring sod & planting areas to their proper elevations in relation to walks, paving, drain structures, & other site conditions. The site grading plan must be checked prior to installation of sod to insure that drainage & other conditions will not be modified.

3.03 PLANTING:
Planting shall take place during favorable weather conditions.

The Contractor shall ascertain the location of all utilities & easements so proper precautions can be taken not to damage or encroach them.

Planting shall be located where it is shown on the plan. No planting holes shall be dug until the proposed locations have been staked on the ground by the Contractor & reviewed by the Landscape Architect.

Excavation of holes shall extend to the required subgrades as specified on the planting diagrams located on the planting plans. Plant pits shall be circular in outline in outline & shall have a profile which conforms to the 'Tree & Shrub Planting Diagrams'.

Planting pits shall be excavated to the following dimensions & refilled with a mixture of planting soil & native soil: 1 gallon: 12"x12"x12"in., 3 gallon: 20"x20"x18"min.,7 gallon: 30"x30"x24"min., field grown material & trees: 1-1/2 x width & depth of root ball plus 12" min.

No planting or laying of sod shall be initiated until the area has been cleaned of existing sod or other plant materials, rough grass, weeds, debris, stones etc. & the ground has been brought to an even grade, approved by the Landscape Architect.

All plants shall be set to ultimate grade. No filling will be permitted around trunks of trees & shrubs. All ropes, wire, stakes, etc. shall be removed from the sides & top of the ball & removed from the planting holes before filling in. All flagging ribbon shall be removed from trees & shrubs before planting.## Excess excavation (fill) from all holes shall be removed from the site, at no additional expense to the Owner.

All plants shall be planted with a suitable soil saucer around the edge of the plant hole & maintained as such for watering until turnover to Owner.

3.04 PRUNING:
Remove dead & broken branches from all plant material. Prune to retain typical growth habit of individual plants with as much height & spread as possible in a manner which will preserve the plant's natural character.

Make all cuts with sharp instruments flush with the trunk or adjacent branch, in such a manner as to insure elimination of stubs. Cuts made at right angles to line of growth will not be permitted.

3.05 GUYING:
All trees over 6' in height shall, immediately after setting to proper grade, be guyed with three sets of two strands, no. 12 gauge malleable galvanized iron, in tripod fashion. Wires shall not come in direct contact with the tree but shall be covered with rubber hose at the contact points. Wires shall be fastened in such a manner as to avoid pulling crotches apart.

Stakes shall be 2"x2" lumber of sufficient length to support each tree.

Turnbuckles for guying trees shall be galvanized or cadmium plated & shall be of adequate size & strength to properly maintain tight guy wires.

3.06 WATER:
Each plant tree or tree shall be thoroughly watered in after planting. Watering of all newly installed plant materials shall be the responsibility of the Landscape Contractor until final acceptance by the Owner or Landscape Architect.

Water shall be potable & supplied by the owner.

3.07 SOD:
The Landscape Contractor shall submit a unit price per cubic yard for the supply & distribution of planting soil to be applied at a depth of one inch (1") to all areas receiving sod.

It shall be the responsibility of the Landscape Contractor to fine grade all landscape areas, eliminating all bumps, depressions, sticks, stones & other debris.

The finished level of all sod areas after settlement shall be one (1") below the top of the abutting curbs, walks, walks, paving & wood borders to allow for building turf.

If in the opinion of the Landscape Architect, top dressing is necessary after rolling the sod, clean yellow sand will be evenly applied over the entire surface of the uneven areas & thoroughly washed in.

3.08 SEEDING:
The Landscape Contractor shall remove all vegetation & rocks larger than (1") in diameter from areas to be seeded, scarify the area, then apply fertilizer at the rate of 500lbs. per acre.

Application Rates: Argentine Bahia Grass seed @ 200 pounds per acre mixed with common hulled Bermuda seed @ 30lbs. per acre. All other seeding to be installed per supplier s instruction.

3.09 CLEANING UP:
The Landscape Contractor shall at all times keep the premises free from accumulations of waste materials & rubbish caused by their employees or work. Landscape Contractor shall leave all paved areas 'broom clean' when work is completed on a daily basis.

3.10 MAINTENANCE:
Maintenance shall begin immediately after each plant is installed & shall continue until all plantings are accepted by Owner or Landscape Architect.

Maintenance shall include watering, weeding, removal of dead materials, resetting plants to proper grades or upright positions, spraying, restoring water saucers &/or any other necessary operations.

Proper protection to the sodded areas shall be provided & any damage resulting from planting operation shall be repaired promptly. Trees & other plants which fall or are blown over during the maintenance period will be reset by the Landscape Contractor at no additional expense to the Owner, the only exception being hurricane force winds.

Replacement of plants during the maintenance period shall be the responsibility of the Landscape Contractor, excluding vandalism or damage on the part of others, lightning, or hurricane force winds, until final acceptance.

In the event that weeds or other undesirable vegetation becomes prevalent, it shall be the Landscape Contractor's responsibility to remove them.

3.11 COMPLETION, INSPECTION & ACCEPTANCE
Completion of the work shall mean the full & exact compliance & conformity with the provisions expressed or implied in the Drawings & Specifications, including the complete removal all trash, debris, soil or other waste created by the Landscape Contractor.

Inspection of work to determine completion of contract, exclusive of the possible replacement of plants, will be made by the Owner &/or Landscape Architect at the conclusion of all planting & at the request of the Landscape Contractor.

After inspection, the landscape contractor will be notified by the Owner of the acceptance of all plant material & workmanship, exclusive of the possible replacement of plants subject to guarantee.

LANDSCAPE DETAILS

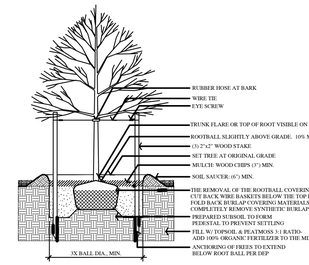

1 DECIDUOUS TREE PLANTING WITH STAKE & WIRE TIE-HEAVY DUTY
SCALE: NTS

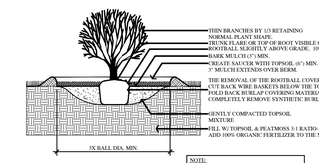

2 SHRUB PLANTING
SCALE: NTS

NOTE:
SHRUBS SHOULD BE CONTAINER GROWN & WEED FREE.

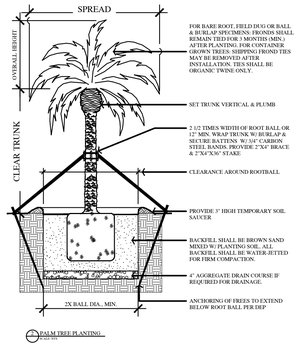

3 PALM TREE PLANTING
SCALE: NTS

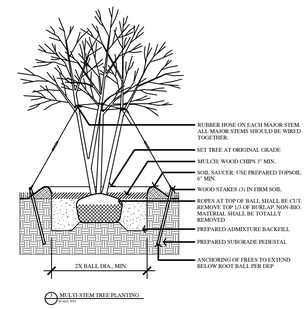

4 MULTI-STEM TREE PLANTING
SCALE: NTS

TREE MITIGATION

SHADE TREES	Removed 97" caliper from site	Replaced with 106" caliper on site (see plans and legend)
PALM TREES	Removed 12 qualifying palm trees from site	Replaced with 39 palms on site

PLANT LEGEND

QTY	COMMON NAME	BOTANICAL NAME	SIZE	NOTES
3	Alexander Palm, Triple	Archontophoenix Alexandrae	8', 10', 12' CT	Triple
2	Alexander Palm	Archontophoenix Alexandrae		Existing, #247, 249
78	Boston Fern	Nephrolepis Exaltata	3 gal	
3	Calophyllum Tree	Calophyllum Brasiliense	6" Cal	16' Spread, 18" total Cal
6	Coconut Palm	Cocos nucifera	12', 15', 18' Ct	Curved specimen
110	Coco Plum	Chrysobalanus Icaco "Red Tip"	4' Ht OA	Hedge
355	Coco Plum	Chrysobalanus Icaco "Red Tip"	2' Ht OA	Hedge
1	Coccothrinax Palm, Double	Coccothrinax Barbadensis	4" Cal	To match existing
1	Coccothrinax Palm	Coccothrinax Barbadensis		Existing, #246
2	European Fan Palm, Triple	Chamaerops Humilis	2', 4', 6' Ct	
160	Fakahatchee Grass	Tripsacum Dactyloides	max 3 gal, 24" OA	
4	Green Buttonwood	Conocarpus Erectus		6' Spread min, 24" total Cal
1775	Green Island Ficus	Ficus Microcarpa	3 gal, 12" Ht	
2	Licuala Palm	Licuala Grandis	25 gal	
650	Liriope	Liriope Muscari "Evergreen Giant"	3 gal	Transplant #227, 232, 236, 237
3	Oak Tree	Quercus		
5	Oak Tree	Quercus Virginiana	8" Cal	
35	Philodendron Selloum	Philodendron Selloum	3 gal	
12	Royal Palm	Roystonea	8'-10' GW	
7	Royal Palm	Roystonea	10' - 12' GW	
1	Royal Palm	Roystonea	12' - 15' GW	
2	Royal Palm	Roystonea		Transplant #233, 245
4	Royal Palm	Roystonea	16' - 18' GW	
12	Royal Palm	Roystonea		Existing street trees
4	Sea Grape	Coccoloba Uvifera	12' Ht, 6" Cal min.	24" total Cal
35	Shell Ginger	Alpinia Zerumbet	3 gal	

DON SKOWRON
INCORPORATED
donskowron@mc.com
la6666674

PLANTING SPECIFICATIONS AND DETAILS

GULFSTREAM HOTEL
PALM BEACH COUNTY
LAKE WORTH, FLORIDA

DATE ISSUED:
February 4, 2016

DATE PLOTTED:
FEBRUARY 4, 2016

L3

12/21/2015 8:04:16 AM