CITY OF LAKE WORTH
1900 2nd Ave N · Lake Worth, Florida 33461 · Phone: 561-586-1687

Agenda
Regular Meeting
City of Lake Worth
Historic Resources Preservation Board
City Hall Commission Room
7 North Dixie Hwy; Lake Worth, FL

WEDNESDAY, OCTOBER 19, 2016 6:30 PM

1. Roll Call and Recording of Absences

2. **Pledge of Allegiance**

3. Additions/Deletions/Reordering and Approval of the Agenda

4. Approval of Minutes

   A. September 14, 2016 RM Minutes

5. Cases

   A. Swearing in of Staff and Applicants

   B. Proof of Publication

      1. LW Herald - 112 South J Street

   C. Withdrawals/Postponements

   D. Consent

   E. Public Hearings

      1. Board Disclosure

      2. HRPB Project # 16-00100221: Consideration of a Certificate of Appropriateness (COA) for 112 South J Street for New Construction to allow a +/- 975 square foot single-family structure including a historic waiver from the accessory structure limitations, and a request for an addition and exterior alterations for the existing rear +/- 505 square foot single-family structure pursuant to Sections 23.2-7, 23.3-8, 23.3-11, and 23.5-4 of the Land Development Regulations. The subject property is located in the Medium Density Multi-family (MF-30) zoning district and is subject to the

provisions of the Single-Family Two-Family Residential (SFTF-14) zoning district. The existing structure is a contributing resource in the Southeast Lucerne Local Historic District. PCN# 38-43-44-21-15-049-0110.

3. HRPB Project #16-00100200: Consideration of a Certificate of Appropriateness (COA) for 301 South Federal Highway for new construction of a +/- 6,281 square foot, two-story, three-unit townhome structure on the southwest corner of S. Federal Highway and 3rd Avenue South, 301 South Federal Highway. The 0.15 acre site is currently undeveloped and is located in the Mixed Use-Federal Highway (MU-FH) zoning district and the Southeast Lucerne Local Historic District. PCN# 38-43-44-21-15-109-0090. The Applicant is requesting a continuance to a date certain of November 9, 2016.

F. Unfinished Business

1. HRPB Project #16-00100193: Consideration of a Certificate of Appropriateness (COA) for window and door replacement for the single-family structure located at 1111 N Lakeside Drive; PCN# 38-43-44-21-15-358-0140. The subject property was constructed in 1951 and is a contributing resource within the Northeast Lucerne Local Historic District.

2. HRPB Project #16-00100104: Consideration of a Certificate of Appropriateness (COA) for an addition to the existing structure at 1002 South Lakeside Drive; PCN# 38-43-44-27-01-024-0050. The subject property was constructed in 1960 and is a non-contributing resource within the South Palm Park Local Historic District. The Applicant is requesting a continuance.

G. New Business

1. HRPB Project #16-00100217: Consideration of a Certificate of Appropriateness (COA) for roof replacement to the subject property located at 901 North Federal Highway, PCN# 38-43-44-21-15-286-0160. The subject building was constructed c.1926 and is a contributing resource within the Northeast Lucerne Local Historic District.

2. HRPB Project #16-00100224: Consideration of a Certificate of Appropriateness (COA) for installation of a PVC fence at the single-family residence located at 914 South Palmway; PCN# 38-43-44-27-01-032-0050. The subject property was constructed in 1968 and is a non-contributing resource within the South Palm Park Local Historic District.

3. HRPB Project #16-00100216: Consideration of a Certificate of Appropriateness (COA) for window and door replacement for the single-family structure located at 1001 N M Street; PCN# 38-43-44-21-15-304-0160. The subject property was constructed in 1941 and is a contributing resource within the Northeast Lucerne Local Historic District.

6. Planning Issues

7. Public Comments (3 minute limit)

8. Departmental Reports

9. Board Member Comments

10. Adjournment

11. If a person decides to appeal any decision made by the board, agency or commission with respect to any matter considered at such meeting or hearing, he or she will need a record of the proceedings, and that, for such purpose, he or she may need to ensure that a verbatim record of the proceedings is made, which record includes the testimony and evidence upon which the appeal is to be based. (F.S. 286.0105)

    NOTE: ALL CITY BOARDS ARE AUTHORIZED TO CONVERT ANY PUBLICLY NOTICED MEETING INTO A WORKSHOP SESSION WHEN A QUORUM IS NOT REACHED. THE DECISION TO CONVERT THE MEETING INTO A WORKSHOP SESSION SHALL BE DETERMINED BY THE CHAIR OR THE CHAIR'S DESIGNEE, WHO IS PRESENT AT THE MEETING. NO OFFICIAL ACTION SHALL BE TAKEN AT THE WORKSHOP SESSION, AND THE MEMBERS PRESENT SHOULD LIMIT THEIR DISCUSSION TO THE ITEMS ON THE AGENDA FOR THE PUBLICLY NOTICED MEETING. (Sec. 2-12 Lake Worth Code of Ordinances)

    Note: One or more members of any Board, Authority or Commission may attend and speak at any meeting of another City Board, Authority or Commission.

    All project-related back-up materials, including full plan sets, are available for review by the public in the Planning, Zoning and Historic Preservation Division located at 1900 2nd Avenue North.

CITY OF LAKE WORTH
1900 2nd Ave N · Lake Worth, Florida 33461 · Phone: 561-586-1687

Agenda
Regular Meeting
City of Lake Worth
Historic Resources Preservation Board
City Hall Commission Room
7 North Dixie Hwy; Lake Worth, FL

WEDNESDAY, SEPTEMBER 14, 2016 6:02 PM

1. Roll Call and Recording of Absences
   Present were: Chairman Herman Robinson, Vice-Chairman Darrin Engel, Robert D'Arinzo, Madeleine Burnside, Tom Norris, Judith Just, Erin Fitzhugh Sita.
   Also present: Maxime Ducoste, Assistant Director of Planning, Zoning, Historic Preservation; Aimee Sunny, Historic Preservation Coordinator; Curt Thompson, Senior Community Planner; Pamala Ryan, Board Attorney; Sherie Coale, Board Secretary.
2. **Pledge of Allegiance**

3. Additions/Deletions/Reordering and Approval of the Agenda
   None
4. Approval of Minutes

   A. August 10, 2016 Regular Meeting Minutes
   Motion: D. Engel, T. Norris 2nd
   Vote: Ayes all, unanimous
5. Cases

   A. Swearing in of Staff and Applicants
   Board Secretary swore in all persons giving testimony.
   B. Proof of Publication
   Provided in meeting packet
   C. Withdrawals/Postponements
   None
   D. Consent
   None
   E. Public Hearings

      1. Board Disclosure
      None
      2. Cases

         a. HRPB Project # 15-00100137: Consideration of a REVISION to an approved Certificate of Appropriateness (COA) for construction of a new single-family

residence at the subject property located at 230 North O Street; PCN# 38-43-44-21-15-040-0080. The subject property is a vacant lot located within the Old Lucerne Local Historic District in the Single Family Residential zoning district (SFR).

Staff: A. Sunny presents case and staff findings. Applicant has requested a change to the roofing material previously approved as a standing seam roof. Request for dimensional shingle roof. It is compatible with guidelines.

Board: Board members asked about reasons for wanting a change.

Applicant: G. Antoniazzi, owner, stated the reason for the change is budgetary concerns and was told a better fit for the neighborhood, most homes had a shingle roof. Inquired as to why he was required to return for Board approval. Response was it was due to a change in material. For example, if the structure has a white concrete tile roof and it is being replaced with a white concrete tile roof it will not require Board review. Any change from the historic material would require a Board review. In this particular case because it was originally an advertised public hearing, it would come back to the Board as an advertised public hearing.

Public Comment: Linda Mahoney-325 North O Street- will not create an adverse impact on neighborhood, is of a good design and better kept than many homes.

John Lewis Jr. – lives across the street would like the shingle roof better than the standing seam.

Motion: E. Fitzhugh Sita moves to approve HRPB Project # 15-00100137 with attached conditions, T. Norris 2nd.

Vote: Ayes all, unanimous.

b. HRPB Project # 15-00100022: Consideration of a Certificate of Appropriateness (COA) for new construction of an addition to the existing structure at 812 South Lakeside Drive: PCN# 38-43-44-27-01-024-0050. The subject property was constructed in 1942 and is a contributing resource within the South Palm Park Local Historic District in the Single Family Residential zoning district (SFR).

Staff: Aimee presents the case, staff findings, and reviews the details of scope of work to both structures. Staff report in its entirety shall be entered into the record as it is a complicated case. Requests that Original building may have been planned as a single-story but at some point during construction was erected as a two (2) story. Tax exemption would apply only to the original historic structure for the value of the improvements. Staff confirmed with property appraiser a partial exemption would be available.

There are three areas that need to be addressed and are not in compliance with code. The table presented reflects requirement for equal setbacks for Intracoastal front yard and street side front yard, 50 feet each. Current proposal is for a 44' 1" setback Intracoastal side. Height of structure as it relates to side wall setbacks and height above crown of road are an issue. Maximum building coverage also exceeds code.

Board: Questions regarding impermeable allowances, setbacks and why there is no variance application accompanying the site plan.

Survey shows property line on water side, not mean high tide line. Staff is suggesting shifting the new structure six (6) feet to the west which would reduce overage in lot coverage and meet front/rear setback requirements. Board inquires if any rear setback intrusions are allowed? Staff responds only accessory structures are allowed at 5 feet from the property line, but not in the Intracoastal front setback. Roof overhangs may intrude up to two (2) feet into setback.

The finish floor height is an issue as it relates to the setback distance to wall. According to submitted schematics, the wall height (measured to the top of the wall beneath the flat roof) is a 23 foot wall with a 6 foot setback. Finished floor must be at 10 feet above sea level for new structure. A possible resolution could be to increase building side setbacks or waive building wall height and setback requirements. Question as to the height of finished floor and crown of road which brings this measurement to 23 foot height.

Applicant: Arthur Marino-Discussion of the Hold Harmless Agreement as it relates to the historic structure. Staff states it is based upon the premise the historic structure would not be required to be raised to 10 feet in order to meet the floodplain requirements so long as it meets the historic exemption criteria. City recommends the historic waiver to allow the old structure to remain at seven (7) feet. The new structure finished floor will be at ten (10) feet per FEMA requirements.

Motion: E. Fitzhugh Sita to accept as evidence, into the record, the document presented by Applicant regarding a 1957 variance for setback. D. Engel 2nd.

Vote: Ayes all, unanimous.

Staff & Board Discussion: The shifting of the building west by six (6) feet will reduce the lot coverage and satisfy both front yard setbacks. E. Fitzhugh Sita is sympathetic to the historic waiver not in favor of the proposed lot coverage. Discussion of the loggia and the Intracoastal setback.

Public Comments: John Miller 818 S Lakeside- Is in favor of proposal. Does not believe the proposed height will not be out of place relative to his property.

Brian Mudd- 810 S Lakeside Drive-welcomes the re-invigoration of the old structure.

Motion: E. Fitzhugh Sita moves to grant a historic waiver HRPB Project # 15-00100022 to allow for a wall height up to 23 ft (as measured from finished floor)as measured 12" above the crown of the road with a required minimum six (6) foot side setback. T. Norris. 2nd.

Vote: Ayes all, unanimous.

Motion: E. Fitzhugh Sita moves to approve HRPB Project # 15-00100022, amending condition #2, the applicant shall comply with the 50 foot setback from the Intracoastal waterway/property line. M. Burnside 2nd.

Vote: Ayes all, unanimous.

c. HRPB Project # 16-01400012, 16-00500013, 16-00100114 301 S Federal Highway PCN# 38-43-44-21-15-109-0090. Requests for consideration of a Major Site Plan, Conditional Use, Certificate of Appropriateness, respectively, and participation in the Sustainable Bonus Incentive Program to allow a +/- 6,281 square foot 2-story 3-unit townhome structure on the vacant lot at said location. The subject property is located in the South Palm Park Historic District in the Mixed Use-Federal Highway zoning district (MU-FH).

Staff: C. Thompson presents the case regarding the site plan, zoning and sustainable bonus. Applicant meets the site plan, conditional use and sustainable bonus standards.

A. Sunny presents the historic compatibility and historic aspects related to the Certificate of Appropriateness. Recommends decorative shutters, water table height should be raised to height of sill and be integrated into the sill and be consistent around entire building. Proposed tile roof should be white not grey. Tower element could be too high, recommend discussion by Board. Windows on first adjusted to one to two proportion, some second floor windows could be made into pairs rather than single.

Applicant: Curtis Dubberly, Miller Land Planning, changed double garage doors to single with tandem parking to lessen the visual effect on the elevation.
Board: Questions about the roofline, not really in favor of the tower element, whether the tower can be eliminated. Gables could be a nice addition. Discussion of the location of the garages.
M. Ducoste questions whether Board is attempting to reformulate the conditions or redesigning the project. A. Sunny suggests approval of site plan and conditional use. Comments and lack of detail is important for the applicant to hear.
Public Comment: None
Certificate of Appropriateness would be continued.
Shade trees at each garage as opposed to the palms on 3rd Avenue. M. Ducoste suggests the shade tree species should be acceptable to the forester instead of conditioning the site with a particular tree.
Applicant is in agreement with conditions.
Motion: E. Fitzhugh Sita moves to approve HRPB Project # 16-01400012, Major Site Plan with change to one (1) condition. Specifically amend Condition #2 of Additional Conditions of Approval for Conditional Use Permit by deleting the text "when retail business has closed for the day"; and add for Major Site Plan a condition for "one shade tree to be placed along 3rd Ave S in front of each unit. R. D'Arinzo 2nd.
Vote: Ayes all, unanimous.
Motion: E. Fitzhugh Sita moves to approve COUS 16-00500013 with conditions as previously provided for in the Major Site Plan. T. Norris 2nd
Vote: Ayes all, unanimous.
Motion: D. Engel moves to continue HRPB 16-00100114 to date certain of Oct 12, J. Just 2nd .
Vote: Ayes all, unanimous.

d. HRPB Project # 16-00100171 Consideration of a Certificate of Appropriateness (COA) for New Construction to allow a +/- 712 square foot accessory structure and a +/- 531 square foot addition to the main structure located at 314 Columbia Drive: PCN# 38-43-44-15-06-001-0170. The subject property is a contributing structure located in the College Park Historic District in the Single Family Residential zoning district (SFR).
A. Sunny presents case, code requires the long expanse of a blank wall be avoided.
Applicant: Danielle McCarroll agrees with the windows to be added to new construction however her husband does not agree with windows facing a fence.
Public Comment: None
Motion: D. Engel motions to approve HRPB Project # 16-00100171 with staff recommended conditions. M. Burnside 2nd.
Vote: Ayes all, unanimous.

F. Unfinished Business

G. New Business

1. HRPB Project # 16-00100104 Consideration of a Certificate of Appropriateness (COA) for new construction of an addition to the structure located at 1002 S Lakeside Drive: PCN# 38-43-44-27-01-042-0050. The subject property is a non-contributing resource within the South Palm Park Historic District.

Staff: A. Sunny presents the case and staff findings. Landscape code will be applicable due to the scope of the addition. Staff is not in support of 2nd story blank space as proposed. Portions of the proposal are not compatible with Historic Preservation.
Applicant: Mr. Renbert Gordon, Architect,-currently no garage on property.
Owner: Mr. Caswell addresses horizontal windows
Board: Questions about tower. Owner states that it is easier to stack 2nd floor on top of first floor at same size. D. Engel reiterates the compatibility criteria that is being evaluated. Owner disagrees the windows on the first floor are original. E. Fitzhugh Sita inquires as to why there is no bathroom window, perhaps a square frosted window in bathroom. Mr. Gordon states there was a window but it was removed in the re-visioning process. T. Norris asks if its clerestory only. Discussion about size / proportion of the windows in clerestory. Applicant not opposed to re-working those particular windows. H. Robinson asks about the height of the 3rd story. M. Ducoste states this is not a third story as they are not permitted in the code. M. Burnside asks about roofline split-pitch. Other Board members agree is will not fit on new roof. E. Fitzhugh Sita, T. Norris and H. Robinson not comfortable with height of the "belvedere".
Public Comment: None
Motion: D. Engel moves to approve with Conditions as approved by staff and amend condition #6 from 8 foot zero to 3 foot four. Withdraws motion.
Applicant asks for motion to continue to next HRPB to October 12, 2016
Motion: E. Fitzhugh Sita moves to continue HRPB Project # 16-00100104 to a date certain of October 12, 2016. T. Norris 2nd.
Vote: Ayes all, unanimous.
E. Fitzhugh Sita explains the applicant has the recommendations. Applicant is not content with staff suggestions and staff has worked extensively and parties disagree about suggestions, revisions. D. Engel explains that 2 cases heard tonight came for conceptual review multiple times before requesting Board approval.

2. HRPB Project # 16-00100193 Consideration of a Certificate of Appropriateness (COA) for window replacement for the structure located at 1111 N Lakeside Drive: PCN# 38-43-44-21-15-358-0140. The subject property is a contributing resource within the North East Lucerne Historic District.
Staff: A. Sunny presents case and staff findings. The proposal does not meet criteria. The replacement of awning windows should be avoided, they should be repaired.
Applicant: Not present.
Board: discussion- J. Just disagrees with the idea of applicant being allowed to replace the sides and rear and have to leave the front as it exists with repairs to be made.
T. Norris- would like to continue and for the applicant to be present.
Motion: E. Fitzhugh Sita motions to continue HRPB Project # 16-00100193 to date certain of October 12 T. Norris 2nd
Vote: Ayes all, unanimous.

3. HRPB Project # 16-00100198 Consideration of a Certificate of Appropriateness (COA) for exterior alterations to the structure located at 421 N K Street: PCN# 38-43-44-21-15-114-0210. The subject property is a non-contributing resource within the North East Lucerne Historic District.
Staff: A. Sunny presents case. Active code case with 90 days to resolution. All work was done without permit. Windows have been boarded over and applicant states windows

have fallen out. Property has been foreclosed on and changed hands several times over the years as the work has been conducted by various owners. Staff is able to approve any revisions the owner would resubmit. Discussion of appeal process should the owner so desire. Proposal is not in compliance with code, historic standards or comprehensive plan.
Applicant: not present.
Motion: E. Fitzhugh Sita moves for denial of HRPB Project # 16-00100198. Permits are required and does not believe this is the way to obtain the approvals. D. Engel 2nd.
Public comment: None.
Vote: Ayes all, unanimous.

4. HRPB Project # 16-00100199 Consideration of a Certificate of Appropriateness (COA) for exterior alterations for the structure located at 303 S J Street: PCN# 38-43-44-21-15-117-0170. The subject property is a contributing resource within the South East Lucerne Historic District.
Staff: A. Sunny presents case. Request is for stucco finish and window replacement. Wood lap siding is the original. Proposal as presented it is not in compliance with historic standards.
Owner: Larry Feldman has pulled permits, paid fines and hired a contractor.
D. Engel believes the house had a permit. Staff recommendation is the trim should be replaced around windows, windows can stay, and wood lap siding should be placed on home, staff will be able to approve . Board recognizes the cooperativeness of owner and patience.
Motion: E. Fitzhugh Sita motions for approval of HRPB Project # 16-00100199 with staff conditions. J. Just 2nd.
Public Comment: None
Vote: Ayes all, unanimous.

6. Planning Issues
   None- workshop next week
7. Public Comments (3 minute limit)
   None
8. Departmental Reports
   828 N Lakeside Dr is for sale
9. Board Member Comments
   914 demolition was approved. Backhoe on the premises.
10. Adjournment
    9:25 PM

Attest: _____
Herman Robinson, Chairman

Submitted By: _____
Sherie Coale, Board Secretary

Minutes Approved: _____
Date

THE

LAKE WORTH HERALD

Published Once a Week

Lake Worth, Palm Beach County, Florida

STATE OF FLORIDA
COUNTY OF PALM BEACH:

BEFORE the undersigned authority personally appeared MARK J EASTON, who on oath says that he is PRESIDENT of *The Lake Worth Herald*, a weekly newspaper published at Lake Worth in Palm Beach County, Florida; that the attached copy of advertisement, being a Legal Notice in the matter of

Notice by the City of Lake Worth, Florida, Historic Resources Preservation Board, HRPB 16-00100221, public hearing to be held at or after 6:00 p.m. on October 12, 2016, in the City Hall Commission Chambers, 7 North Dixie Highway, Lake Worth, Florida,

was published in said newspaper in the issue of

September 29, 2016

Affiant further says that the said *The Lake Worth Herald* is a newspaper published at Lake Worth, in said Palm Beach County, Florida, and that the said newspaper has heretofore been continuously published in said Palm Beach County, Florida, each week and has been entered as second class mail matter at the post office in Lake Worth, in said Palm Beach County, Florida, for a period of one year next preceding the first publication of the attached copy of advertisement; and affiant further says that he has neither paid nor promised any person, firm or corporation any discount, rebate, commission or refund for the purpose of securing this advertisement for publication in the said newspaper.

MARK J EASTON

SWORN TO AND SUBSCRIBED before me this 29th day of September, A.D. 2016, by Mark J Easton, who is known to me.

Notary Public, State of Florida at Large

DEBRA J SNODGRASS
NOTARY PUBLIC
STATE OF FLORIDA
Comm# FF045522
Expires 9/18/2017

Legal Notice No. 30792

PLEASE TAKE NOTICE that the City of Lake Worth, Florida, Historic Resources Preservation Board, will hold a Public Hearing in the City Hall Commission Room, 7 N Dixie Hwy, in said City at 6:00 PM, or as soon thereafter as possible, on Wednesday, October 12, 2016, to consider a request by Jonathan Wright and Christa Hauss, Applicants, for the following:

HRPB 16-00100221: A request for Consideration of a Certificate of Appropriateness for New Construction to allow a +/- 975 square foot single-family structure including a historic waiver from the accessory structure limitations, and a request for an addition and exterior alterations for the existing rear +/- 505 square foot single-family structure located at 112 South J Street, pursuant to Sections 23.2-7, 23.3-8, 23.3-11, and 23.5-4 of the Land Development Regulations. The subject property is located in the Medium Density Multi-family (MF-30) zoning district and is subject to the provisions of the Single-Family Two-Family Residential (SFTF-14) zoning district. The existing structure is a contributing resource in the Southeast Lucerne Local Historic District. PCN# 38-43- 44-21- 15-049- 0110.

Written responses can be sent to the Lake Worth Historic Preservation Board at 1900 2 nd Avenue N, Lake Worth, FL 33461, and must arrive before the hearing date to be included in the formal record. You also have the opportunity to attend the meeting to provide oral testimony. For additional information on the above issues, please visit the City of Lake Worth Division of Planning, Zoning and Historic Preservation located at 1900 2 nd Avenue N, Lake Worth, FL 33461, or contact City Staff at 561-586- 1687. If an affected party decides to appeal any decision made by the Board, Agency, or Commission with respect to any matter considered at such meeting or hearing, he or she will need a record of the proceedings, and that, for such purpose, he or she may need to ensure that a verbatim record of the proceedings is made, which record includes the testimony and evidence upon which the appeal is to be based. (FS 286.0105). In accordance with the provisions of the American with Disabilities Act (ADA) this document may be requested in an alternative format. Persons in need of special accommodation to participate in this proceeding are entitled to the provision of certain assistance. Please call 561-586- 1687 no later than five (5) days before the hearing if this assistance is required.

Publish: The Lake Worth Herald
September 29, 2016

Lake Worth, Florida. The Art of Florida Living.sm

City Of Lake Worth
Department for Community Sustainability
Planning, Zoning and Historic Preservation Division
1900 Second Avenue North · Lake Worth · Florida 33461· Phone: 561-586-1687

MEMORANDUM DATE: October 12, 2016

AGENDA DATE: October 19, 2016

TO: Chair and Members of the Historic Resources Preservation Board

RE: **112 South J Street**

FROM: Aimee N. Sunny, Senior Preservation Coordinator
Department for Community Sustainability

TITLE: HRPB Project Number 16-00100221: Consideration of a Certificate of Appropriateness (COA) for construction of a new +/- 975 square foot single-family structure including a historic waiver from the accessory structure limitations, and a request for an addition and exterior alterations for the existing rear +/- 505 square foot single-family structure located at **112 South J Street**; PCN# 38-43-44-21-15-049-0110. The subject property is contributing to the Southeast Lucerne Local Historic District.

OWNERS: Jonathan Wright and Christa Hauss
112 South J Street
Lake Worth, FL 33460

BACKGROUND:

The subject property has an existing, contributing single-family Frame Vernacular structure built c.1925 that is located at the rear of the lot. The existing structure is approximately 505 square feet and is in need of structural and cosmetic improvements. The property has public frontage on South J Street to the west.

REQUEST:

The Applicant has submitted plans for construction of a new one-story single-family residence on the subject property, as well as an addition and alterations to the existing single-family structure. The Applicant has provided proposed architectural plans for the building, including a site plan, floor plan, elevations, and a landscape plan. The style of the proposed building is a contemporary cottage, with elements of local frame vernacular architecture.

The proposed new construction structure has public frontage on South J Street to the west. The building will be constructed with concrete block walls with a smooth stucco finish and a pitched gabled metal roof. Other proposed finishes for the outside of the building include impact aluminum single-hung windows and sliding glass doors, decorative banding in the gable ends, corner boards, and a large wraparound porch with columns.

The Applicant has also submitted plans for two additions and exterior alterations including window and door replacement to the existing single-family structure on the property. The proposal also includes wood siding replacement as needed, and structural improvements as needed. The Applicant has provided proposed architectural plans for the building, including a site plan, floor plan, and elevations.

The subject property is zoned Medium Density Multi-Family Residential (MF-30), however based on the lot size and width, the Code redirects to Single-Family Two-Family Residential (SF-TF 14) and this proposal is subject to the development standards for this district in the Zoning Code and the Comprehensive Plan. Construction of a single-family residence and additions to the existing structure are permitted in the SF-TF 14 district of the City of Lake Worth Zoning Code. The following table includes some of the basic specifications for the proposed construction:

Dimension	**Required by Code**	**Existing or Proposed**
Lot size	5,000 sq. ft. for single-family	6,750 sq. ft.
Lot width	50'-0" for a single unit	50'-0"
Lot depth	n/a	135'-0"
Front setback	20'-0"	24'-0"
Side setback	10% of lot width = 5'-0" each side	5'-0" from North P.L. to new house, 30'-0" from North P.L. to existing; 7'-8" from South P.L. to new house, 11-4" from South P.L. to existing
Rear setback	15'-0" or 10% of lot depth= 13'-6" for primary building 5'-0" for accessory structures	63' for primary building 8' existing to accessory structure
Height[1] (Comp. Plan)	30' for SFR land use designation	14'-3" to mid-point of the roof
Height (SFR zoning)	30' for primary structure, 24' for accessory, 2 stories	14'-3" to mid-point of the roof
F.A.R.[2]	0.50 (3,375 sq. ft.)	0.34 (2,320 sq. ft.)
Max. Building Coverage[3] for a Medium Lot	35% max. = 2,362.6 sq. ft.	34.3% (2,320 sq. ft.)
Impermeable surface	55% max. = 3,712.50 sq. ft.	50.7% (Appx. 3,425 sq. ft.)
Accessory Structure Limitations	Not to exceed 40% of the main structure, or 1000 sq. ft. whichever is less	Proposed Structure: 975 sq. ft. gross, appx. 1672 sq. ft. including porch Accessory Structure: 520 sq. ft. gross, appx. 667 sq. ft. including porch ***The proposal exceeds the limitation.**

[1] *Building height:* The vertical distance measured from the minimum required floor or base flood elevation of twelve (12) inches above the crown of the road, whichever is less, to (a) the highest point of a flat roof; (b) the deck line of mansard roof, (c) the average height between eaves and ridge for gable, hip, and gambrel roofs, or (d) the average height between high and low points for a shed roof. The measurement of height shall not include decorative architectural elements, chimneys, mechanical equipment, church steeples and architecturally integrated signage, which may extend an additional ten (10) feet but cannot cover cumulatively more than ten (10) percent of the roof surface.

[2] *Floor area ratio:* A regulatory technique which relates to total developable site area and the size (square feet) of development permitted on a specific site. A numeric rating assigned to each land use category that determines the total gross square feet of all buildings as measured from each building's exterior walls based upon the actual land area of the parcel upon which the buildings are to be located. Total gross square feet calculated using the assigned floor area ratio shall not include such features as parking lots or the first three (3) levels of parking structures, aerial pedestrian crossovers, open or partially enclosed plazas, or exterior pedestrian and vehicular circulation areas.

[3] *Building lot coverage:* The area of a lot covered by the impervious surface associated with the footprint(s) of all buildings on a particular lot. Structured parking garages are exempt from building lot coverage.

ANALYSIS:

New Construction and Additions:

Zoning and Comprehensive Plan Consistency

The proposed new construction project is consistent with all site data requirements in the City's Zoning Code and Comprehensive Plan, except for the accessory structure limitation. The building as proposed would be conforming, and would not require any variances from the code. The site will require an exception from the accessory structure limitation, and Staff is recommending approval of a Historic Waiver to allow the proposal.

According to LDR Section 23.5-4(r) the HRPB can choose to waive or modify certain land development regulations, if the proposal meets the following criteria:

(A) The waiver or modification is in harmony with the general appearance and character of the neighborhood or district.

Response: The request complies with this criterion. The proposal is compatible with the Code criteria regarding New Construction in the historic districts, and Staff has recommended Conditions of Approval to further increase compatibility.

(B) The project is designed and arranged in a manner that minimizes aural and visual impact on adjacent properties while affording the owner reasonable use of the land.

Response: The request complies with this criterion. Although the gross floor area of the proposed structure is 975 square feet, the total lot coverage with the deep wraparound porch is 1,672 square feet. Visually, the porches add substantial mass to the front structure, and delineate this as the main structure compared to the 667 square foot accessory structure. Additionally, the streetscape elevation shows that the proposed structure is compatible with the surrounding structures.

(C) The waiver or modification will not injure the area or otherwise be detrimental to the public health, safety or welfare.

Response: The request complies with this criterion. The proposal does not exceed any Code requirements beyond the accessory structure limitation, and is therefore not detrimental to the public.

(D) The waiver or modification is the minimum necessary to allow reasonable use of the property while preserving its historical attributes.

Response: The Applicant intends to heavily utilize the exterior porches as outdoor living space, and is therefore requesting the deep wraparound porch on the main structure. It is possible to build a larger structure with smaller porches, which would more closely comply with the Code, however the owner would prefer the design as submitted.

Staff is in support of the historic waiver request, as the Applicant complies with the decision criteria, and the proposal is compatible with the district and all additional LDR requirements.

The current proposal includes 3 off-street parking spaces, which exceeds Code requirement.

The landscaping for a new construction project will need to be evaluated to ensure it meets the minimum requirements of Section 23.6-1, Landscape Regulations. The Applicant has provided a plan showing the proposed landscaping along with the new building footprint. Final review and approval will take place during the building permit review process.

Historic Preservation

New construction within a local historic district is subject to specific criteria for visual compatibility as set forth in Section 23.5-4(k)3 of the City's historic preservation regulations. These criteria are provided in Attachment 1 and include Staff's response to each criterion. The criteria deal with massing, scale, materials, and design compatibility with the surrounding historic district.

It is the analysis of Staff that the new construction project as proposed is minimally compatible with the regulations set forth in the historic preservation ordinance. The proposed design responds to the lot size, shape, and configuration and respects the lot development pattern in the neighborhood. The design utilizes some character-defining design elements found in the Frame Vernacular architectural style, which is prevalent in the Southeast Lucerne Local Historic District and Lake Worth in general.

The proposed design utilizes concrete block with smooth stucco construction, a gabled metal roof, aluminum windows and doors, and stucco banding in the gables to create a simplified, compatible design. Staff did recommend that the Applicant utilize wood siding, stucco banding or fiber cement siding, in order to be more compatible with the Frame Vernacular style, however the Applicant did not feel this was a cost effective option. The window and door sizes and locations are generally appropriate, although Staff does have concerns over the location of the windows in relation to the columns on the front elevation facing South J Street. Staff had previously recommended that the Applicant reconfigure the column and window spacing, and the Applicant has been working with Staff to achieve a more compatible design. Staff has recommended conditions of approval to address the columns and windows.

Staff also has concerns over the simplistic detailing of the structure, and has recommended conditions of approval to address this concern and allow the Applicant flexibility in adding detailing compatible with the Frame Vernacular design. The front porch could have pickets and rails in order to create additional design interest. The column capital and base design should be revised to differentiate between the two. Historically accurate trim and sills should be utilized around the windows and doors.

The building has a short façade facing South J Street, and its height and massing are in scale with other single-family structures on the block. Two parking spaces are located at the rear of the structure, with access from the alley, and a single driveway is located in the front of the structure, on the south side of the property, which is also compatible with the district.

The proposed porch and bathroom additions to the rear structure are compatible with the Code requirements. The Applicant has utilized a sensitive, compatible design for both additions, and the proposal will not have an adverse effect on the existing historic structure. Staff has included Conditions of Approval to address the column and trim detailing. The proposed window replacement is compatible, as most openings currently have plywood in place of windows, and the proposed windows are compatible in size and design. Any wood trim and siding that needs to be replaced will replicate the existing profiles and configuration.

Public Comment

At the time of publication of the agenda, Staff has not received any public comments regarding this project.

COMPREHENSIVE PLAN CONSISTENCY:

The project, as proposed, is consistent with the following Comprehensive Plan goals and objectives concerning future land use and housing:

Goal 1.3 To preserve and enhance the City's community character as a quality residential and business center within the Palm Beach County urban area. (Objective 1.3.4)

Goal 1.4 Encourage preservation and rehabilitation of historic and natural resources and where appropriate restrict development that would damage or destroy these resources. (Objective 1.4.2)

Goal 3.1 To achieve a supply of housing that offers a range of residential unit styles and prices for current and anticipated homeowners and renters in all household income levels by the creation and/or preservation of housing units. (Objective 3.1.1)

CONSEQUENT ACTION:
Approve the application; approve the application with conditions; continue the hearing to a date certain to request additional information; or deny the application.

RECOMMENDATION:
Staff recommends approval of the request for new construction, and the historic waiver from the accessory structure limitations, based on the architectural plans submitted, with the following conditions:

1) The column spacing on the front elevation shall be refined by adding paired columns at the corners. The windows shall be adjusted accordingly, in order to be centered within the opening, subject to Staff review at permitting. Staff recommend that the Applicant utilize paired columns on the south elevation, in order to decrease the space between columns, subject to Staff review at permitting.
2) The capital and base details on the porch columns shall be adjusted to be historically accurate, and shall not have the same size and configuration, subject to Staff review and approval at permitting.
3) The height of the wraparound porch may be raised if needed, subject to Staff review at permitting.
4) The Applicant may utilize wood siding, stucco banding to replicate wood siding, or fiber cement siding in place of the smooth stucco finish, subject to Staff review at permitting.
5) The Applicant may add additional decorative trim, cornerboards, rafter tails, and other elements compatible with Frame Vernacular architecture, subject to Staff review at permitting.
6) The exact design and configuration of the front door, shall be subject to Staff review at permitting.
7) The exact design of the trim and sills for all windows and doors shall be revised to utilize historically accurate detailing, subject to Staff review at permitting.
8) The windows and doors may be wood, aluminum, or fiberglass and shall not have reflective glass.
9) All proposed landscaping, fencing, hardscape, and mechanical equipment shall be subject to Staff review at permitting.
10) The proposal shall comply with the Land Development Regulations and all other required Codes.

Staff recommends approval of the request for a porch and bathroom addition to the existing structure, based on the architectural plans submitted, with the following conditions:

1) The capital and base details on the porch columns shall be adjusted to be historically accurate, and shall not have the same size and configuration, subject to Staff review and approval at permitting.
2) The height of the front porch may be raised if needed, subject to Staff review at permitting.
3) If any wood siding or trim is too deteriorated to be repaired, the replacement shall replicate the existing in size, shape, location, configuration, and design, subject to Staff review and approval at permitting or during construction.
4) The exact design and configuration of the front door, shall be subject to Staff review at permitting.
5) The windows and doors may be wood, aluminum, or fiberglass and shall not have reflective glass.

POTENTIAL MOTION:

I MOVE TO **APPROVE** HRPB 16-00100221: Consideration of a Certificate of Appropriateness (COA) for new construction of a single-family structure and two additions and exterior alterations to the existing single-family structure at the subject property located at **112 South J Street**, based upon the preponderance of competent substantial evidence, with the conditions as recommended by Staff.

I MOVE TO **DENY** HRPB 16-00100221: Consideration of a Certificate of Appropriateness (COA) for new of a single-family structure and two additions and exterior alterations to the existing single-family structure at the subject property located at **112 South J Street**, because the Applicant has not established by a preponderance of the evidence that the application is in compliance with the City of Lake Worth Land Development Regulations, the Secretary of the interiors Standards for the Rehabilitation of Historic Properties, and the City's Comprehensive Plan.

ATTACHMENTS:

1. Decision Criteria – New Construction
2. Proposed Architectural Plans, dated 9/30/2016
3. Proposed Product Information

LOCATION MAP

MEMORANDUM

DATE: October 12, 2016

TO: Chair and Members of the Historic Resources Preservation Board

FROM: Aimee N. Sunny, Senior Preservation Coordinator
Department of Community Sustainability

SUBJECT: **HRPB Project Number 16-00100221:** Consideration of a Certificate of Appropriateness (COA) for construction of a new +/- 975 square foot single-family structure including a historic waiver from the accessory structure limitations, and a request for an addition and exterior alterations for the existing rear +/- 505 square foot single-family structure located at **112 South J Street**; PCN# 38-43-44-21-15-049-0110. The subject property is contributing to the Southeast Lucerne Local Historic District.

HRPB Meeting Date: October 19, 2016

Section 23.5-4k(3) Additional guidelines for new construction; visual compatibility

All improvements to buildings, structures and appurtenances within a designated historic district shall be visually compatible. New buildings should take their design cues from the surrounding existing structures, using traditional or contemporary design standards and elements that relate to existing structures that surround them and within the historic district as a whole. Building design styles, whether contemporary or traditional, should be visually compatible with the existing structures in the district.

A. In approving or denying applications for certificates of appropriateness for new construction, the City shall also, at a minimum, consider the following additional guidelines which help to define visual compatibility:

(1) The height of proposed buildings shall be visually compatible and in harmony with the height of existing buildings located within the historic district.
Response: The proposed building is consistent with the height of other 1-story buildings surrounding the property, and is in harmony with the height of other historic properties in the district.

(2) The relationship of the width of the building to the height of the front elevation shall be visually compatible and in harmony with the width and height of the front elevation of existing buildings located within the district.
Response: The width and height of the front elevations of the proposed building is in scale with the surrounding properties.

(3) The openings of any building within a historic district should be visually compatible and in harmony with the openings in buildings of a similar architectural style located within

the historic district. The relationship of the width of the windows and doors to the height of the windows and doors in a building shall be visually compatible with buildings within the district.
Response: The proposed windows and doors are compatible in height and width with the typical windows and doors on the neighboring structures.

(4) The relationship of solids to voids in the front facade of a building or structure shall be visually compatible and in harmony with the front facades of historic buildings or structures located within the historic district. A long, unbroken facade in a setting of existing narrow structures can be divided into smaller bays which will complement the visual setting and the streetscape.
Response: The proposal avoids long expanses of unbroken façade, and the overall design and configuration complements the existing streetscape.

(5) The relationship of a building to open space between it and adjoining buildings shall be visually compatible and in harmony with the relationship between buildings elsewhere within the district.
Response: The proposed building respects the customary front, side, and rear setbacks within the district, and also within the current zoning code.

(6) The relationship of entrance and porch projections to sidewalks of a building shall be visually compatible and in harmony with the prevalent architectural styles of entrances and porch projections on buildings and structures within the district.
Response: The proposed design utilizes a typical Frame Vernacular configuration for the front porch and front door. The proposed porch size and projection is larger than most structures within the district, and therefore the detailing of the porch may need to be adjusted to ensure the porch columns, pickets, and railings are compatible with the district.

(7) The relationship of the materials, texture and color of the facade of a building shall be visually compatible and in harmony with the predominant materials used in the buildings and structures of a similar style located within the historic district.
Response: The building will be concrete block finished with smooth stucco. This material is common in Lake Worth, although not heavily utilized on the surrounding historic structures. Although constructed of concrete block, the style of the structure is Frame Vernacular, and therefore the compatible siding material would be wood, or a wood-like siding.

(8) The roof shape of a building or structure shall be visually compatible and in harmony with the roof shape of buildings or structures of a similar architectural style located within the historic district.
Response: The gable roof is compatible with the Frame Vernacular architectural style and the City as a whole.

(9) Appurtenances of a building, such as walls, wrought iron, fences, evergreen, landscape masses and building facades, shall, if necessary, form cohesive walls of enclosures along a street to insure visual compatibility of the building to the buildings and places to which it is visually related.

Response: It is the opinion of Staff that the plans provided are consistent with this requirement.

(10) The size and mass of a building in relation to open spaces, the windows, door openings, porches and balconies shall be visually compatible and in harmony with the buildings and places to which it is visually related.
Response: The proposed structure is larger, but still visually related to the shotgun-style Frame Vernacular houses in the immediate vicinity. The porch is much larger than is found on any structures in the surrounding area, and therefore the detailing should be carefully considered to increase compatibility.

(11) A building shall be visually compatible and in harmony with the buildings and places to which it is visually related in its directional character: vertical, horizontal or non-directional.
Response: The Applicant has provided a streetscape showing the building in relation to those to either side of it, and across the street. The building's height and massing are compatible with other single-family residential buildings on the block.

(12) The architectural style of a building shall be visually compatible with other buildings to which it is related in the historic district, but does not necessarily have to be in the same style of buildings in the district. New construction or additions to a building are encouraged to be appropriate to the style of the period in which it is created and not attempt to create a false sense of history.
Response: The building is a contemporary cottage design that elements of Frame Vernacular architecture. The building is visually compatible with the district, but does not attempt to replicate any historic structures.

(13) Landscaping shall be compatible with the architectural character and appearance of the structure and of other buildings located within the historic district.
Response: It is the opinion of Staff that the plans provided at this point are consistent with this requirement. The landscape plan will be reviewed by Staff at permitting.

(14) In considering applications for certificates of appropriateness to install mechanical systems which affect the exterior of a building or structure visible from a public right-of-way, the following criteria shall be considered:

(a) Retain and repair, where possible, historic mechanical systems in their original location, where possible.
Response: Not applicable to this project.

(b) New mechanical systems shall be placed on secondary facades only and shall not be placed on, nor be visible from, primary facades.
Response: Staff will ensure that any mechanical systems for the new building meet this criterion.

(c) New mechanical systems shall not damage, destroy or compromise the physical integrity of the structure and shall be installed so as to cause the least damage,

invasion or visual obstruction to the structure's building materials, or to its significant historic, cultural or architectural features.

Response: Staff will ensure that any mechanical systems for the building meet this criterion.

(15) The site should take into account the compatibility of landscaping, parking facilities, utility and service areas, walkways and appurtenances. These should be designated with the overall environment in mind and should be in keeping visually with related buildings and structures.

Response: The proposed architectural drawings show a total of three off-street parking spaces, which exceeds the Code requirement. All hardscape surfaces are proposed to be brick pavers set in sand, which is compatible in the district.

B. In considering certificates of appropriateness for new buildings or structures which will have more than one primary facade, such as those on corner lots facing more than one street, the HRPB shall apply the visual compatibility standards to each primary facade.

Response: The above criteria and responses apply to the primary façade facing South J Street.

WRIGHT RESIDENCE

112 SOUTH J STREET

LAKE WORTH, FLORIDA 33460

BUILDING 01

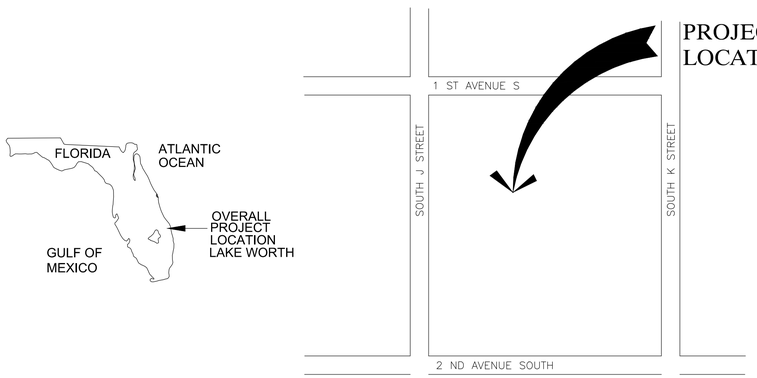

VICINITY MAP
NTS

ABBREVIATIONS

AB	ANCHOR BOLT	FD	FLOOR DRAIN	#	NUMBER	T & G	TONGUE & GROOVE
ABV	ABOVE	FIN	FINISH	NOM	NOMINAL	TEL	TELEPHONE
A/C	AIR CONDITIONING	FIX	FIXTURE	NTS	NOT TO SCALE	TEMP	TEMPORARY
AFF	ABOVE FINISH FLOOR	FLR	FLOOR	OA	OVERALL OUTSIDE AIR	THK	THICK-THICKNESS
ALUM	ALUMINUM	FLUOR	FLUORESCENT	OC	ON CENTER	T.O.	TOP OF
APPROX	APPROXIMATE	FTG	FOOTING	OPG	OPENING	TYP.	TYPICAL
ARCH	ARCHITECTURAL/ARCHITECT	FURR	FURRING	OPP	OPPOSITE	UGND	UNDERGROUND
BD	BOARD	GA	GAGE, GAUGE	ORIG	ORIGINAL	UL	UNDERWRITERS LAB.
BLDG	BUILDING	GALV	GALVANIZED	PART	PARTITION	VERT	VERTICAL
BLK	BLOCK	GL	GLASS	PL	PLATE	W/	WITH
BOTT	BOTTOM	GR	GRADE	PLAS	PLASTER	WC	WATER CLOSET
B.O.	BOTTOM OF	GYP	GYPSUM	PLYWD	PLYWOOD	WH	WATER HEATER
BRG	BEARING	HB	HOSE BIBB	PNL	PANEL	WM	WIRE MESH
BTN	BETWEEN	HCP	HORIZONTAL	PNT	PAINT	W/O	WITHOUT
CAB	CABINET	HDW	HANDICAP	POL	POLISHED	WP	WATERPROOF
CLG	CEILING	HGT	HARDWARE	PREFAB	PREFABRICATED	WS	WEATHER STRIPPING
CEM	CEMENT	HM	HEIGHT	PROJ	PROJECT	WWF	WELDED WIRE FABRIC
CLG	CEILING	HR	HOLLOW METAL	PSF	POUNDS PER SQUARE FOOT		
CL	CLOSET	HVAC	HOUR	PSI	POUNDS PER SQUARE INCH		
CLR	CLEAR		HEATING/VENTILATING/ AIR CONDITIONING	PRTR	PRESSURE TREATED		
COL	COLUMN	IN	INCH	PTD	PAINTED		
CONC	CONCRETE	INCAND	INCANDESCENT	PVMT	PAVEMENT		
CONSTR	CONSTRUCTION	INCL	INCLUDE	QTY	QUANTITY		
CONT	CONTINUOUS	INFO	INFORMATION	REF	REFRIGERATOR		
CONTR	CONTRACTOR	INSUL	INSULATE-INSULATION	REQD	REQUIRED		
CT	CERAMIC TILE	INT	INTERIOR	REINF	REINFORCE-REINFORCING		
CTR	CENTER	KIT	KITCHEN	RET	RETURN		
DEG	(°) DEGREE	LAM	LAMINATED	REV	REVERSE, REVISION		
DEPT	DEPARTMENT	LAV	LAVATORY	RGD	RIGID		
DET	DETAIL	LB	POUND	RM	ROOM		
DF	DRINKING FOUNTAIN	LIN	LINEAR	RO	ROUGH OPENING		
DIA	DIAMETER	LL	LIVE LOAD	SCHED	SCHEDULE		
DIM	DIMENSION	LT	LIGHT	SD	SOAP DISPENSER		
DN	DOWN	LVR	LOUVER	SEP	SEPARATE		
DR	DOOR	MATL	MATERIAL	SECT	SECTION		
DWG	DRAWING	MAX	MAXIMUM				
EA	EACH	MECH	MECHANICAL	SHT	SHEET		
EL	ELEVATION	MEMB	MEMBRANE	SIM	SIMILAR		
ELEC	ELECTRICAL-ELECTRIC	MTL	METAL	SPEC	SPECIFICATION		
EQ	EQUAL	MFC	METAL FURRING CHANNEL				
EQPT	EQUIPMENT	MFR	MANUFACTURER	SQ	SQUARE		
EQUIV	EQUIVALENT	MIN	MINIMUM	STD	STANDARD		
EW	EACH WAY	MIR	MIRROR	STL	STEEL		
EMB.	EMBEDDED	MISC	MISCELLANEOUS	STOR	STORAGE		
EXIST	EXISTING	MO	MASONRY OPENING	SUB	SUBSTITUTE		
EXT	EXTERIOR-EXTERNAL	MR	MOISTURE RESISTANT	SURF	SURFACE		
		NAT	NATURAL	SUSP	SUSPEND-SUSPENDED		
		NIC	NOT IN CONTRACT	SYS	SYSTEM		

INDEX OF DRAWINGS

GENERAL

C-01 COVER SHEET AND INDEX OF DRAWINGS

SURVEY

S-01 (S-48,063) BOUNDARY SURVEY

ARCHITECTURAL

L-01 LANDSCAPE PLAN
SP-01 SITE PLAN
A-01 PROPOSED PLAN
A-02 ELEVATION
A-03 CONTEXTUAL INFORMATION
A-04 RENDERING
A-05 RENDERING
A-06 RENDERING
A-07 RENDERING

SCOPE OF WORK

GENERAL

PLANNING AND ZONING SET

These drawings have a local state and federal copyright and are property of the Juan Contin, Architect. They are not to be used on other projects or extension of this project except by written agreements with Juan Contin, Architect. No design changes which alter the intent of the drawings or specifications are to be made without obtaining written permission from Juan Contin, Architect.

CONTIN
ARCHITECTURE AND DESIGN

JUAN CRISTOBAL CONTIN
FL LICENSE # AR94935
826 SOUTH FEDERAL
HIGHWAY SUITE #3
LAKE WORTH, FL 33460

TELEPHONE +1-561-249-4007
FAX +1-305-704-3878
EMAIL CDGPLANS@GMAIL.COM

JUAN CRISTOBAL CONTIN
FL LICENSE # AR94935

826 SOUTH FEDERAL HIGHWAY
SUIT #4
LAKE WORTH, FL 33460

JOHN WRIGHT
112 SOUTH J STREET
LAKE WORTH, FL 33460

WRIGHT RESIDENCE – BUILDING 01

Date 9-06-2016
Issued
Drawn BB
Checked JC
Revisions

AS SHOWN

COVER - INDEX

A-00

ZONING DISTRICT:

LOT TOTAL:	6,750 S.F.	
SECTION 23.6.1 LANDSCAPER REGULATIONS	REQUIRED / ALLOWED	PROVIDED
50% TREE NATIVE	3 TREES X 50% = 1.5 =2	
50% TREE NATIVE / DROUGHT TOLERANT	74	
TREE SPECIFICATIONS MIN.	12' H, 4' CT, 6' SPR, 3" CAL	
TREE SPECIES	1-3 TREES REQUIRED = 1	
PLAMS=25% OF REQUIRED TREES (MAX)	3 TREES X 25% = .75, = 1 PALM	1
HEDGE SPECIFICATIONS (MIN.)	2' H, 24" O.C	
GROUNDCOVER SPECIFICATIONS (MIN).	PLANTED FULL	
LANDSCAPE POINTS	3500 SF < 7000 SF=100 PTS	
50% POINTS IN FRONT YARD (MIN).	50	80
1 SHADE TREE / EVERY 2,500 SF PF LOT	6750 SF/ 2500 SF = 3	6
1 SHADE TREE IN FRONT YARD (MIN)	1	2
BETWEEN PROPERTY LINE & ROW	LANDSCAPED: NO HARDSCAPE	LANDSCAPE

ARTICLE 6 ENVIRONMENTAL REGULATIONS

CITY OF LAKE WORTH

ZONE DISTRICT: SF-TF 14 SINGLE FAMILY AND TWO-FAMILY RESIDENTIAL

Gross land: 6,751.8 S.F.

	REQUIRED	PROVIDED
Lawn area (PERVIOUS): 5,120.4 SF	50%Min.=5,100 S.F.	5,120.4 S.F.
Shade trees 1 for every 2,500 SF.	3 trees	6 trees
TREE REPLACEMENT COUNT: Trees to be removed = 19 (in addition to wildly grown shrubs) SEE TREE REMOVAL PLAN Note: existing palm to be remained will also count as one shade tree		
100 landscape points for total lot area		SEE NEW PLANTING PLAN
Irrigation system Require pursuant to Article 6 of the Environmental regulations		

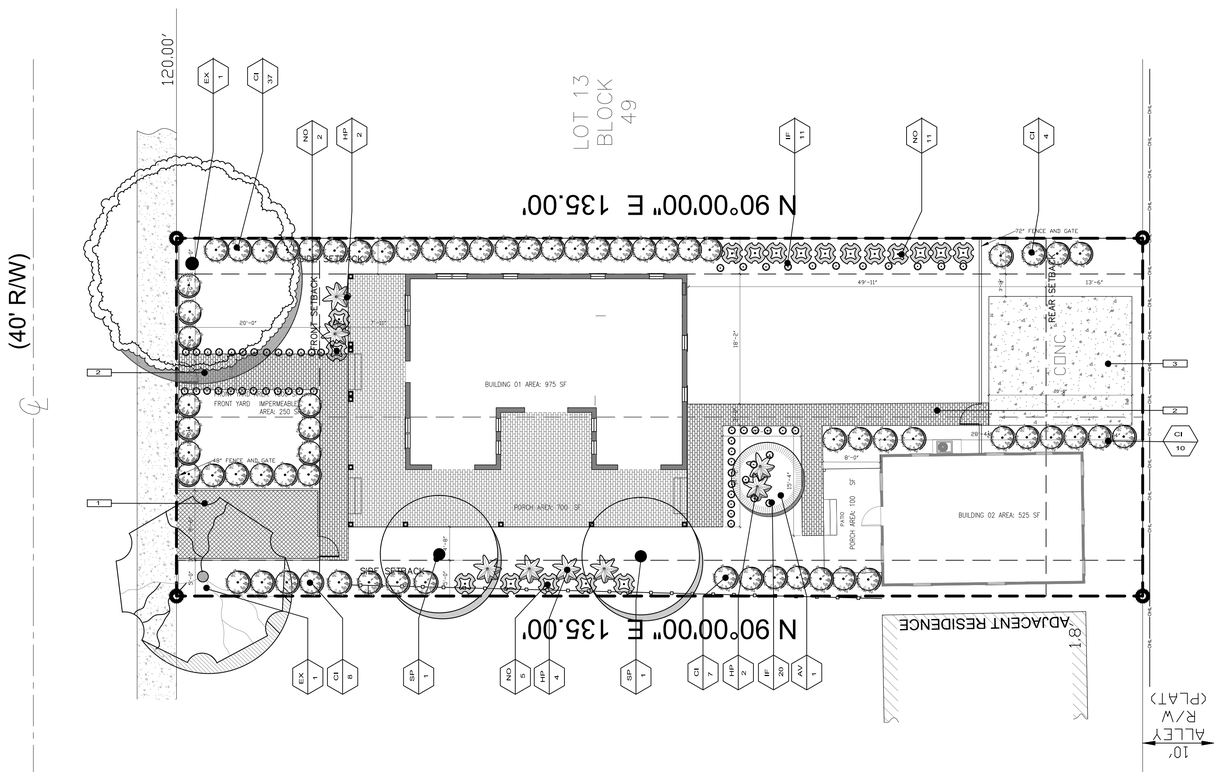

LANDSCAPE PLAN

SCALE : 1" = 10'

PLANTING SCHEDULE

TREES	CODE	BOTANICAL NAME	COMMON NAME	DESCRIPTION
	CI	CHRYSOBALANUS ICACO	COCOPLUM	#3 FULL,DENSE/ 24" HGT. X 24" SPR./ 24" O.C.
	SP	SABAL PALMETTO	CABBAGE PALM	16'-20' O.A./ BOOTED TRUNKS
	HP	HAMELLA PATENS	SCARLET FIRE BUSH	
	NO	NERIUM OLEANDER	OLEANDER	
	IF		ISLAND FICUS	
	AV		AVOCADO	
	EX OAK			EXISTING OAK TREE ON PROPERTY
	EX MG			EXISTING MANGO TREE ON PROPERTY
		PASPALUM VAGINATUM		

HARD SCAPE SCHEDULE

SYMBOL	CODE	DESCRIPTION	QUANTITY
	1	PERMEABLE PAVERS	190 SF
	2	BRICK PAVERS	340 SF
	3	EXISTING CONCRETE PAD TO REMAIN.	340 SF

SOFT SCAPE SCHEDULE

SYMBOL	CODE	DESCRIPTION	QUANTITY
	1	PERMEABLE PAVERS	1
	2	BRICK PAVERS	
	3	EXISTING CONCRETE PAD TO REMAIN.	

□e□er□□□□te□

These drawings have a local state and federal copyright and are property of the Juan Contin, Architect. They are not to be used on other projects or extension of this project except by written agreements with Juan Contin, Architect. No design changes which alter the intent of the drawings or specifications are to be made without obtaining written permission from Juan Contin, Architect.

CONTIN
ARCHITECTURE AND DESIGN

JUAN CRISTOBAL CONTIN
FL LICENSE # AR94935
826 SOUTH FEDERAL
HIGHWAY SUITE #3
LAKE WORTH, FL 33460

TELEPHONE +1-561-249-4007
FAX +1-305-704-3878
EMAIL CDGPLANS@GMAIL.COM

□□□ □□□□□□□□□□□□□□□□

JUAN CRISTOBAL CONTIN

FL LICENSE # AR94935

826 SOUTH FEDERAL HIGHWAY
SUIT #4
LAKE WORTH, FL 33460

□□e□t
JOHN WRIGHT

112 SOUTH J STREET

LAKE WORTH, FL 33460

□r□e□t□□□tie
WRIGHT RESIDENCE

Date 9-06-2016

Issued

Drawn BB

Checked JC

Revisions

□□□e□□□□□rt□□□□□t
AS SHOWN

□r□□□□□□tie
LANDSCAPE PLAN

□r□e□t□□□□ □r□□□□□□□□□er

□r□□□□□□t□□□

L-01

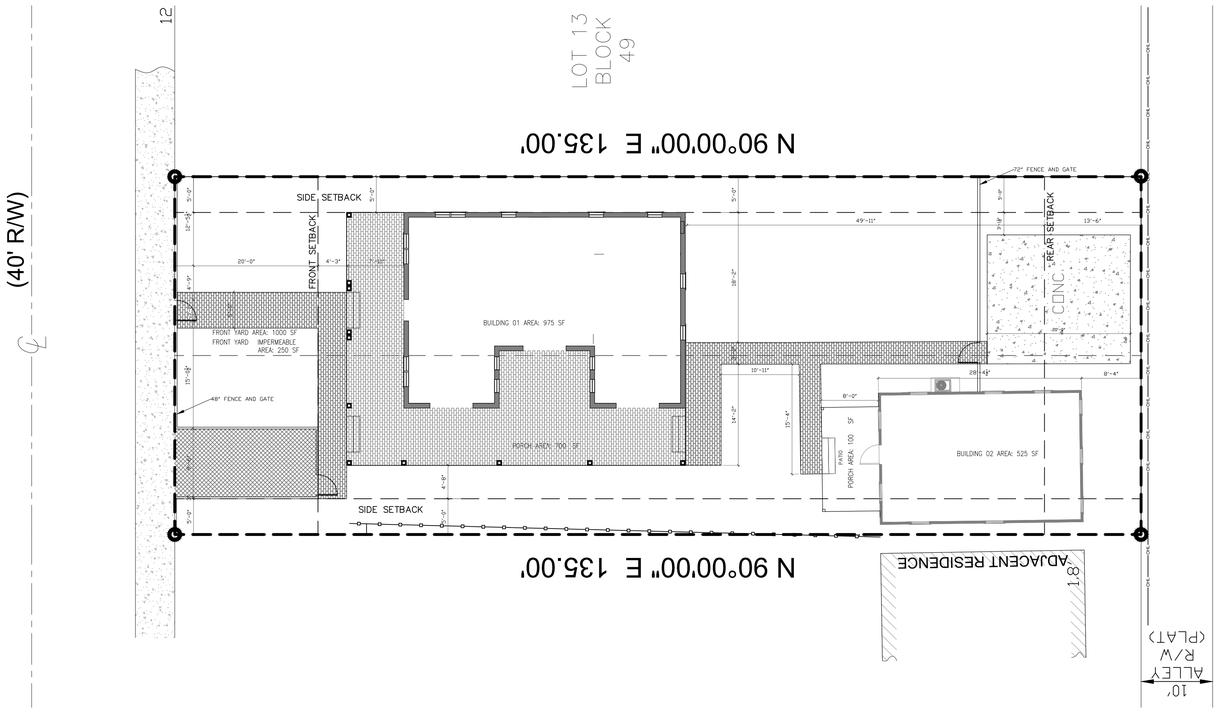

SITE PLAN

SCALE : 1" = 10'

Site Data Table				
Zoning and FLU		**Existing**	**Proposed**	**Required**
Zoning District		**MF-30**	**SF-TF 14**	
Future Land Use		**MF-30**	**SF-TF 14**	
Existing Use		**0100 - SINGLE FAMILY**	**SAME AS EXISTING**	
Proposed Use			**0100 - SINGLE FAMILY**	
Development Standard		**Required**	**Provided**	
Lot Size (Acreage and SF)		0.155 (6,750 sf)		
Lot Width (Frontage)		50'-0"	50'-0"	
Building Height	Primary	30'-0" MAX	17'(To Roof Ridge) 14'-3" (avg. height)	
	Accessory			
Setbacks	Front (_____)	20'	24'	
	Rear (_____)	13'-6"	63'	
	Side (_____)	5' NORTH	5' NORTH	
	Side (_____)	5' SOUTH	7'-8" SOUTH	
Living Area	Single-Family	800 sq. ft MINIMUM	975 sq. ft.	
	Multi-Family			
Accessory Structure Limitation				
Impermeable Space Coverage (%)		55% (3,712.5 SF) MAXIMUM	50.7% (3425 SF)	
Building Coverage (%)		35% (2,362 SF) MAXIMUM	34.3% (2320 SF)	
Maximum Wall Height at Setback		18' MAXIMUM	10'- 6"	
Floor Area Ratio Limitation		0.50 X 6,750 SF = 3,375 SF	0.343 X 6,750 SF = 2,320 SF	
Parking			TWO ON SITE	

ZONING TABLE

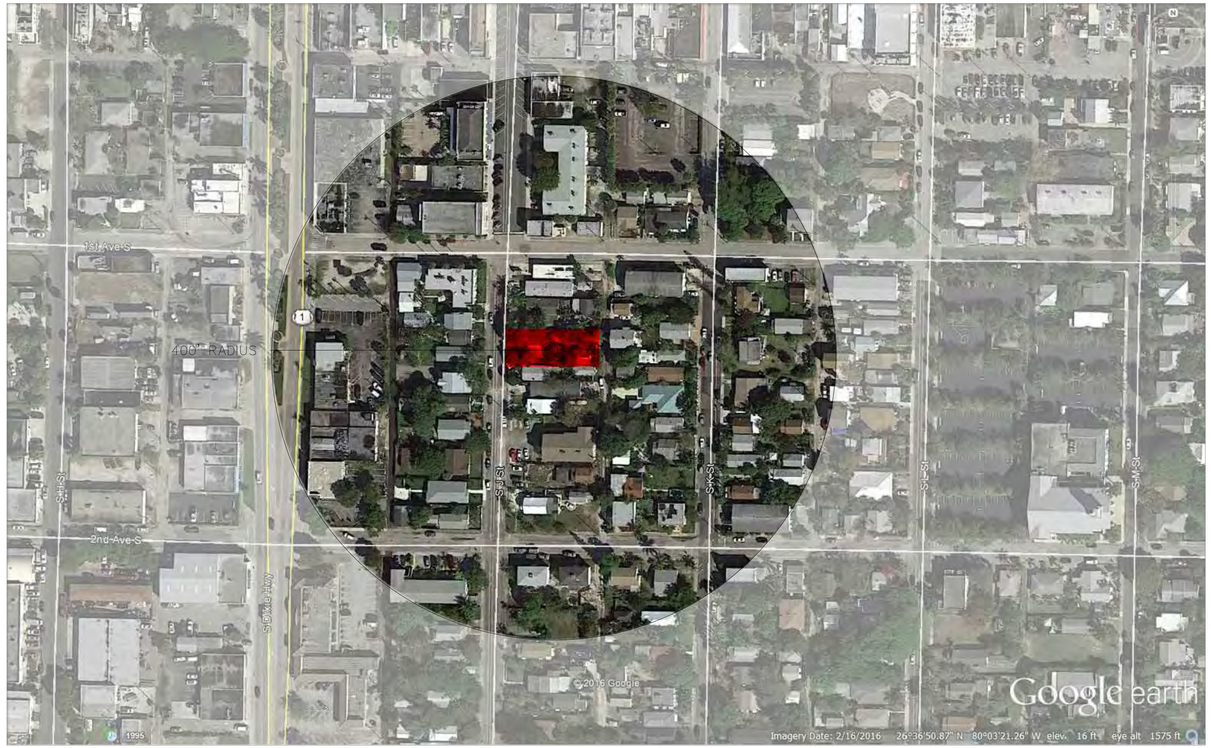

AERIAL VICINITY MAP

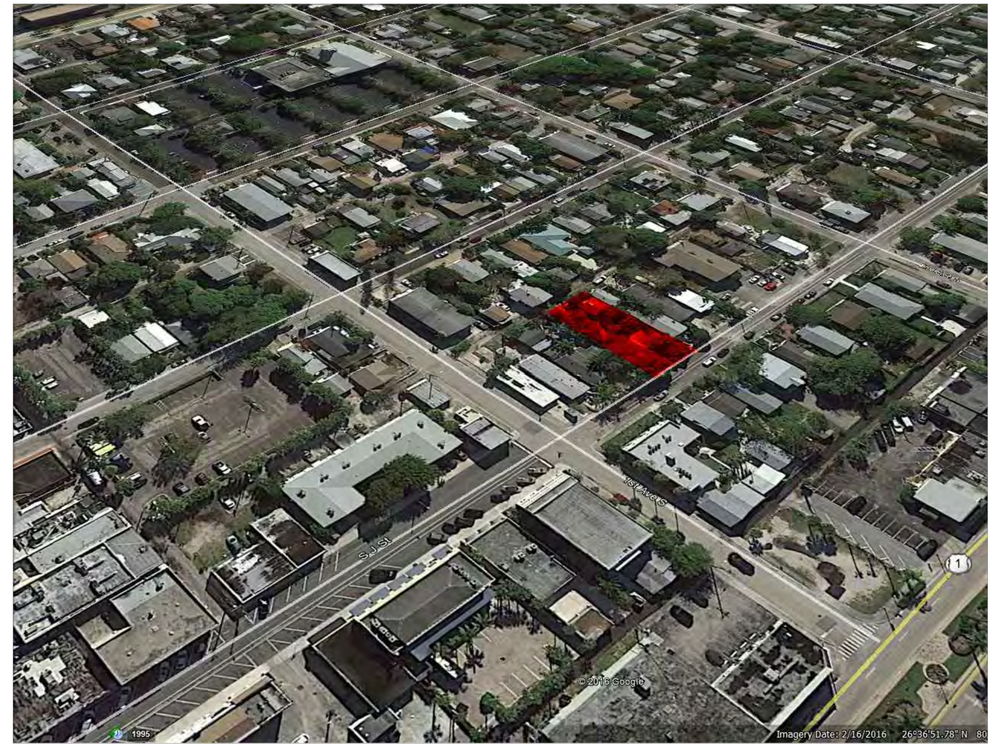

AERIAL SOUTH EAST

These drawings have a local state and federal copyright and are property of the Juan Contin, Architect. They are not to be used on other projects or extension of this project except by written agreements with Juan Contin, Architect. No design changes which alter the intent of the drawings or specifications are to be made without obtaining written permission from Juan Contin, Architect.

CONTIN
ARCHITECTURE AND DESIGN

JUAN CRISTOBAL CONTIN
FL LICENSE # AR94935
826 SOUTH FEDERAL
HIGHWAY SUITE #3
LAKE WORTH, FL 33460

TELEPHONE +1-561-249-4007
FAX +1-305-704-3878
EMAIL CDGPLANS@GMAIL.COM

JUAN CRISTOBAL CONTIN
FL LICENSE # AR94935

826 SOUTH FEDERAL HIGHWAY
SUIT #4
LAKE WORTH, FL 33460

JOHN WRIGHT

112 SOUTH J STREET

LAKE WORTH, FL 33460

WRIGHT RESIDENCE – BUILDING 01

Date 9-06-2016

Issued

Drawn BB

Checked JC

Revisions

AS SHOWN

SITE PLAN

SP-01

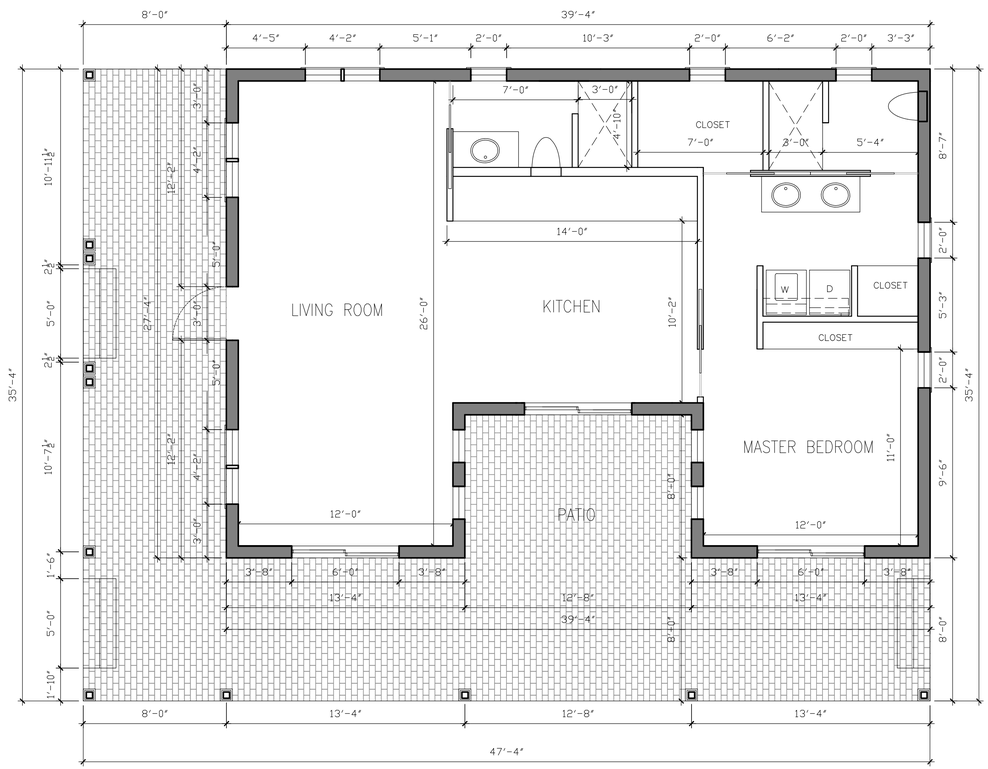

GROUND FLOOR PLAN

SCALE : 1/4" = 1'-0"

N

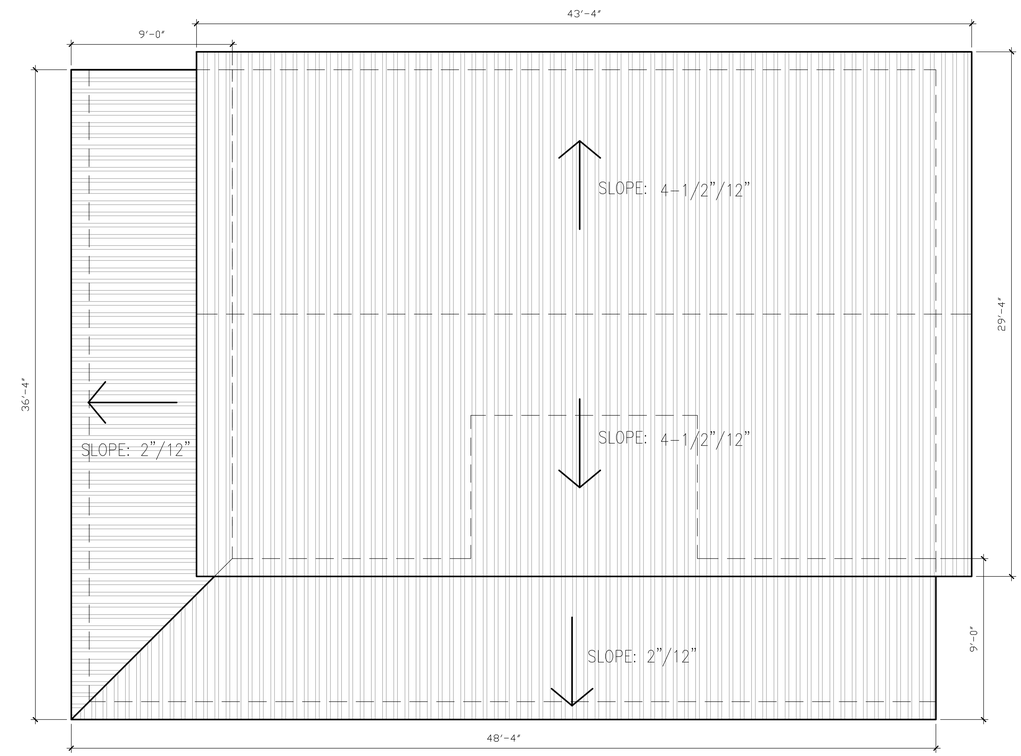

ROOF PLAN

SCALE : 1/4" = 1'-0"

N

These drawings have a local state and federal copyright and are property of the Juan Contin, Architect, They are not to be used on other projects or extension of this project except by written agreements with Juan Contin, Architect, No design changes which alter the intent of the drawings or specifications are to be made without obtaining written permission from Juan Contin, Architect.

CONTIN
ARCHITECTURE AND DESIGN

JUAN CRISTOBAL CONTIN
FL LICENSE # AR94935
826 SOUTH FEDERAL
HIGHWAY SUITE #3
LAKE WORTH, FL 33460

TELEPHONE +1-561-249-4007
FAX +1-305-704-3878
EMAIL CDGPLANS@GMAIL.COM

JUAN CRISTOBAL CONTIN
FL LICENSE # AR94935

826 SOUTH FEDERAL HIGHWAY
SUIT #4
LAKE WORTH, FL 33460

JOHN WRIGHT

112 SOUTH J STREET

LAKE WORTH, FL 33460

WRIGHT RESIDENCE – BUILDING 01

Date 9-06-2016

Issued

Drawn BB

Checked JC

Revisions

AS SHOWN

PROPOSED PLAN

A-01

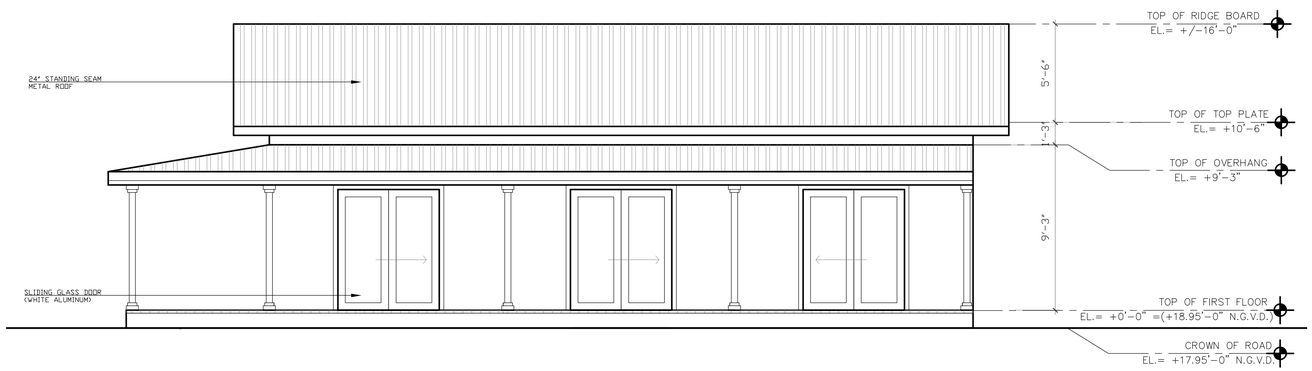

SOUTH ELEVATION (LEFT SIDE)

SCALE : 1/4" = 1'-0"

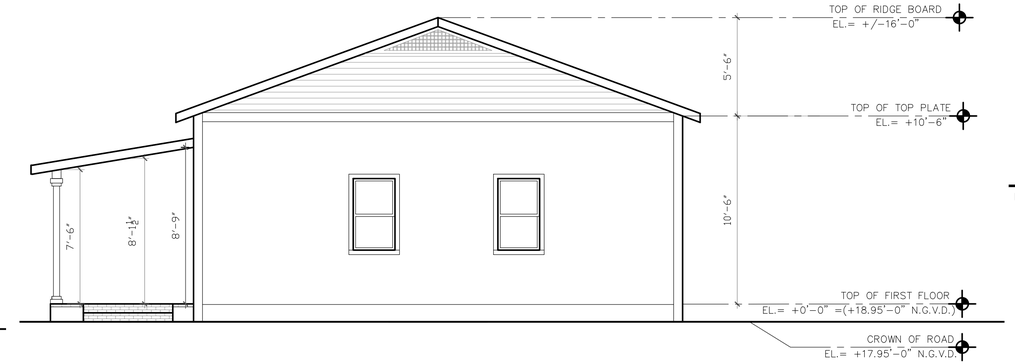

EAST ELEVATION (REAR)

SCALE : 1/4" = 1'-0"

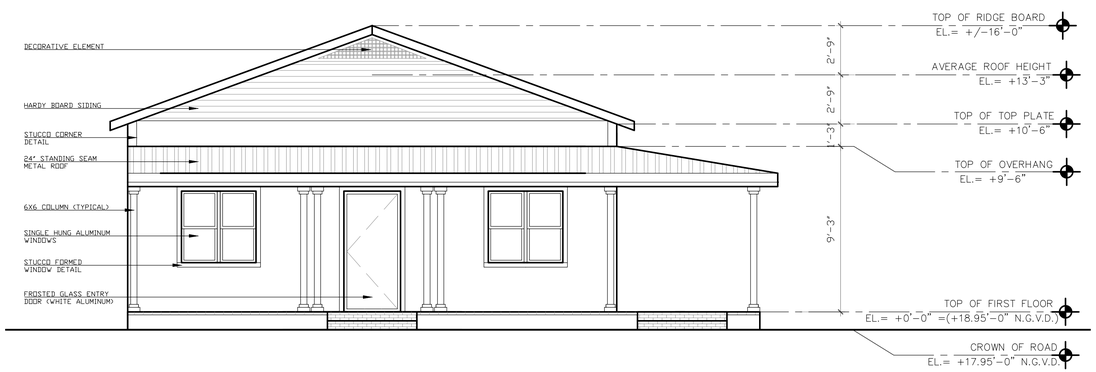

WEST ELEVATION (FRONT)

SCALE : 1/4" = 1'-0"

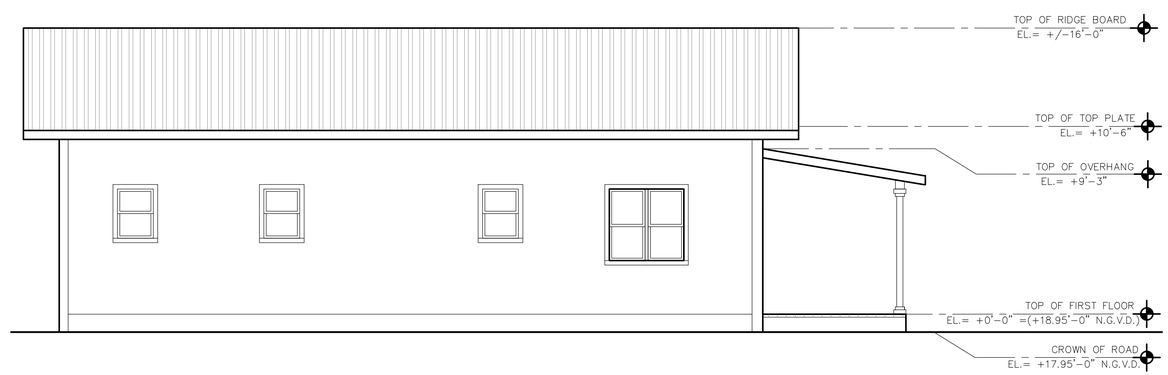

NORTH ELEVATION (RIGHT SIDE)

SCALE : 1/4" = 1'-0"

These drawings have a local state and federal copyright and are property of the Juan Contin, Architect, They are not to be used on other projects or extension of this project except by written agreements with Juan Contin, Architect, No design changes which alter the intent of the drawings or specifications are to be made without obtaining written permission from Juan Contin, Architect.

CONTIN
ARCHITECTURE AND DESIGN

JUAN CRISTOBAL CONTIN
FL LICENSE # AR94935
826 SOUTH FEDERAL
HIGHWAY SUITE #3
LAKE WORTH, FL 33460

TELEPHONE +1-561-249-4007
FAX +1-305-704-3878
EMAIL CDGPLANS@GMAIL.COM

JUAN CRISTOBAL CONTIN
FL LICENSE # AR94935

826 SOUTH FEDERAL HIGHWAY
SUIT #4
LAKE WORTH, FL 33460

JOHN WRIGHT

112 SOUTH J STREET

LAKE WORTH, FL 33460

WRIGHT RESIDENCE - BUILDING 01

Date	9-06-2016
Issued	
Drawn	BB
Checked	JC

Revisions

AS SHOWN

ELEVATION

A-02

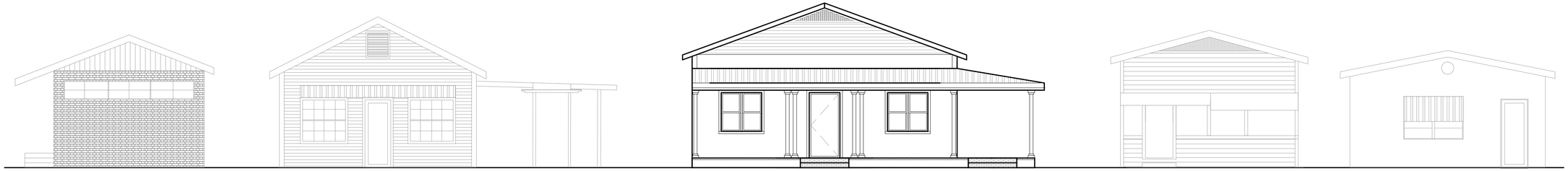

WEST CONTEXT ELEVATION (FRONT)

SCALE : 3/16" = 1'-0"

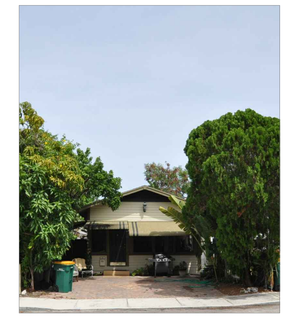

WEST CONTEXT PHOTOGRAPHY (FRONT)

SCALE :NTS

NORTH WEST CONTEXT PHOTOGRAPHY

SCALE :NTS

SOUTH WEST CONTEXT PHOTOGRAPHY

SCALE :NTS

NORTH EAST CONTEXT PHOTOGRAPHY

SCALE :NTS

SOUTH EAST CONTEXT PHOTOGRAPHY

SCALE :NTS

These drawings have a local state and federal copyright and are property of the Juan Contin, Architect, They are not to be used on other projects or extension of this project except by written agreements with Juan Contin, Architect, No design changes which alter the intent of the drawings or specifications are to be made without obtaining written permission from Juan Contin, Architect.

CONTIN
ARCHITECTURE AND DESIGN

JUAN CRISTOBAL CONTIN
FL LICENSE # AR94935
826 SOUTH FEDERAL
HIGHWAY SUITE #3
LAKE WORTH, FL 33460

TELEPHONE +1-561-249-4007
FAX +1-305-704-3878
EMAIL CDGPLANS@GMAIL.COM

JUAN CRISTOBAL CONTIN
FL LICENSE # AR94935

826 SOUTH FEDERAL HIGHWAY
SUIT #4
LAKE WORTH, FL 33460

JOHN WRIGHT
112 SOUTH J STREET
LAKE WORTH, FL 33460

WRIGHT RESIDENCE – BUILDING 01

Date 9-06-2016
Issued
Drawn BB
Checked JC
Revisions

AS SHOWN

CONTEXTUAL INFORMATION

A-03

These drawings have a local state and federal copyright and are property of the Juan Contin, Architect,
They are not to be used on other projects or extension of this project except by written agreements with Juan Contin, Architect, No design changes which alter the intent of the drawings or specifications are to be made without obtaining written permission from Juan Contin, Architect.

CONTIN
ARCHITECTURE AND DESIGN

JUAN CRISTOBAL CONTIN
FL LICENSE # AR94935
826 SOUTH FEDERAL
HIGHWAY SUITE #3
LAKE WORTH, FL 33460

TELEPHONE +1-561-249-4007
FAX +1-305-704-3878
EMAIL CDGPLANS@GMAIL.COM

JUAN CRISTOBAL CONTIN
FL LICENSE # AR94935

826 SOUTH FEDERAL HIGHWAY
SUIT #4
LAKE WORTH, FL 33460

JOHN WRIGHT

112 SOUTH J STREET

LAKE WORTH, FL 33460

WRIGHT RESIDENCE – BUILDING 01

Date 9-06-2016
Issued
Drawn BB
Checked JC
Revisions

AS SHOWN

RENDERING

A-04

These drawings have a local state and federal copyright and are property of the Juan Contin, Architect.
They are not to be used on other projects or extension of this project except by written agreements with Juan Contin, Architect. No design changes which alter the intent of the drawings or specifications are to be made without obtaining written permission from Juan Contin, Architect.

CONTIN
ARCHITECTURE AND DESIGN

JUAN CRISTOBAL CONTIN
FL LICENSE # AR94935
826 SOUTH FEDERAL
HIGHWAY SUITE #3
LAKE WORTH, FL 33460

TELEPHONE +1-561-249-4007
FAX +1-305-704-3878
EMAIL CDGPLANS@GMAIL.COM

JUAN CRISTOBAL CONTIN
FL LICENSE # AR94935

826 SOUTH FEDERAL HIGHWAY
SUIT #4
LAKE WORTH, FL 33460

JOHN WRIGHT

112 SOUTH J STREET

LAKE WORTH, FL 33460

WRIGHT RESIDENCE – BUILDING 01

Date 9-06-2016
Issued
Drawn BB
Checked JC
Revisions

AS SHOWN

RENDERING

A-05

WRIGHT RESIDENCE

112 SOUTH J STREET

LAKE WORTH, FLORIDA 33460

BUILDING 02

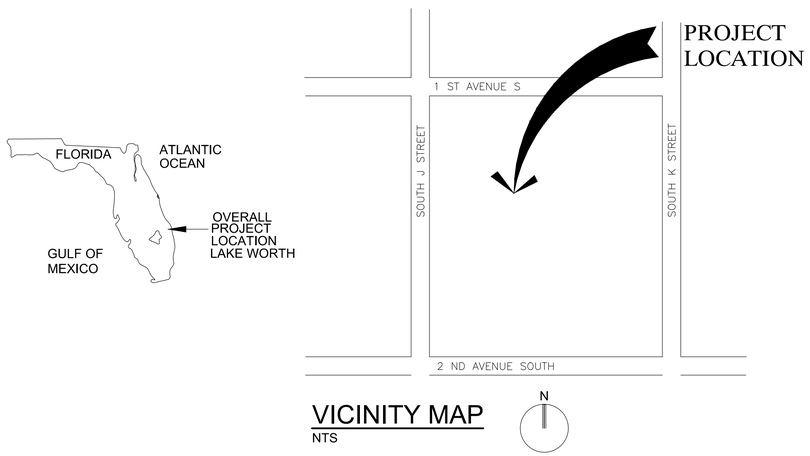

VICINITY MAP
NTS

ABBREVIATIONS

AB	ANCHOR BOLT	FD	FLOOR DRAIN	#	NUMBER	T & G	TONGUE & GROOVE
ABV	ABOVE	FIN	FINISH	NOM	NOMINAL	TEL	TELEPHONE
A/C	AIR CONDITIONING	FIX	FIXTURE	NTS	NOT TO SCALE	TEMP	TEMPORARY
AFF	ABOVE FINISH FLOOR	FLR	FLOOR	OA	OVERALL OUTSIDE AIR	THK	THICK-THICKNESS
ALUM	ALUMINUM	FLUOR	FLUORESCENT	OC	OVL CENTER	T.O.	TOP OF
APPROX	APPROXIMATE	FTG	FOOTING	OPG	OPENING	TYP	TYPICAL
ARCH	ARCHITECTURAL/ARCHITECT	FURR	FURRING	OPP	OPPOSITE	UGND	UNDERGROUND
BD	BOARD	GA	GAGE, GAUGE	ORIG	ORIGINAL	UL	UNDERWRITERS LAB.
BLDG	BUILDING	GALV	GALVANIZED	PART	PARTITION	VERT	VERTICAL
BLK	BLOCK	GL	GLASS	PL	PLATE	W/	WITH
BOTT	BOTTOM	GR	GRADE	PLAS	PLASTER	WC	WATER CLOSET
B.O.	BOTTOM OF	GYP	GYPSUM	PLYWD	PLYWOOD	WH	WATER HEATER
BRG	BEARING	HB	HOSE BIBB	PNL	PANEL	WM	WIRE MESH
BTW	BETWEEN	HCP	HANDICAP	PNT	PAINT	W/O	WITHOUT
CAB	CABINET	HDW	HARDWARE	POL	POLISHED	WP	WATERPROOF
CLG	CEILING	HGT	HEIGHT	PREFAB	PREFABRICATED	WS	WEATHER STRIPPING
CEM	CEMENT	HM	HOLLOW METAL	PROJ	PROJECT	WWF	WELDED WIRE FABRIC
CLG	CEILING	HR	HOUR	PSF	POUNDS PER SQUARE FOOT		
CL	CLOSET	HVAC	HEATING/VENTILATING/ AIR CONDITIONING	PSI	POUNDS PER SQUARE INCH		
CLR	CLEAR			PTRR	PRESSURE TREATED		
COL	COLUMN	IN	INCH	PTD	PAINTED		
CONC	CONCRETE	INCAND	INCANDESCENT	PVMT	PAVEMENT		
CONSTR	CONSTRUCTION	INCL	INCLUDE	QTY	QUANTITY		
CONT	CONTINUOUS	INFO	INFORMATION	REF	REFRIGERATOR		
CONTR	CONTRACTOR	INSUL	INSULATE-INSULATION	REQD	REQUIRED		
CT	CERAMIC TILE	INT	INTERIOR	REINF	REINFORCE-REINFORCING		
CTR	CENTER	KIT	KITCHEN	RET	RETURN		
DEG	(°) DEGREE	LAM	LAMINATED	REV	REVERSE, REVISION		
DEPT	DEPARTMENT	LAV	LAVATORY	RGD	RIGID		
DET	DETAIL	LB	POUND	RM	ROOM		
DF	DRINKING FOUNTAIN	LIN	LINEAR	RO	ROUGH OPENING		
DIA	DIAMETER	LL	LIVE LOAD	SCHED	SCHEDULE		
DIM	DIMENSION	LT	LIGHT	SD	SOAP DISPENSER		
DN	DOWN	LVR	LOUVER	SEP	SEPARATE		
DR	DOOR	MATL	MATERIAL	SECT	SECTION		
DWG	DRAWING	MAX	MAXIMUM	SHT	SHEET		
EA	EACH	MECH	MECHANICAL	SIM	SIMILAR		
EL	ELEVATION	MEMB	MEMBRANE	SPEC	SPECIFICATION		
ELEC	ELECTRICAL-ELECTRIC	MTL	METAL				
EQ	EQUAL	MFC	METAL FURRING CHANNEL	SQ	SQUARE		
EQPT	EQUIPMENT	MFR	MANUFACTURER	STD	STANDARD		
EQUIV	EQUIVALENT	MIR	MIRROR	STL	STEEL		
EW	EACH WAY	MISC	MISCELLANEOUS	STOR	STORAGE		
EMB.	EMBEDDED	MO	MASONRY OPENING	SUB	SUBSTITUTE		
EXIST	EXISTING	MR	MOISTURE RESISTANT	SURF	SURFACE		
EXT	EXTERIOR-EXTERNAL	NAT	NATURAL	SUSP	SUSPEND-SUSPENDED		
		NIC	NOT IN CONTRACT	SYS	SYSTEM		

INDEX OF DRAWINGS

GENERAL

C-01 COVER SHEET AND INDEX OF DRAWINGS

SURVEY

S-01 (S-48,063) BOUNDARY SURVEY

ARCHITECTURAL

L-01 LANDSCAPE PLAN
SP-01 SITE PLAN
A-01 EXISTING CONDITIONS
A-02 PROPOSED PLAN
A-03 RENDERING
A-04 RENDERING

SCOPE OF WORK

GENERAL

PLANNING AND ZONING SET

Copyright

These drawings have a local state and federal copyright and are property of the Juan Contin, Architect. They are not to be used on other projects or extension of this project except by written agreements with Juan Contin, Architect. No design changes which alter the intent of the drawings or specifications are to be made without obtaining written permission from Juan Contin, Architect.

CONTIN
ARCHITECTURE AND DESIGN

JUAN CRISTOBAL CONTIN
FL LICENSE # AR94935
826 SOUTH FEDERAL
HIGHWAY SUITE #3
LAKE WORTH, FL 33460

TELEPHONE +1-561-249-4007
FAX +1-305-704-3878
EMAIL CDGPLANS@GMAIL.COM

Author of Record

JUAN CRISTOBAL CONTIN

FL LICENSE # AR94935

826 SOUTH FEDERAL HIGHWAY
SUIT #4
LAKE WORTH, FL 33460

Owner

JOHN WRIGHT

112 SOUTH J STREET

LAKE WORTH, FL 33460

Project

WRIGHT RESIDENCE - BUILDING 02

Date 9-06-2016

Issued

Drawn BB

Checked JC

Revisions

Scale

AS SHOWN

Drawing Title

COVER - INDEX

Project No.

Drawing Number A-00

Drawing Revision

-

EXISTING BUILDING ELEVATIONS

SITE PHOTOS

REVISIONS:

NORTH

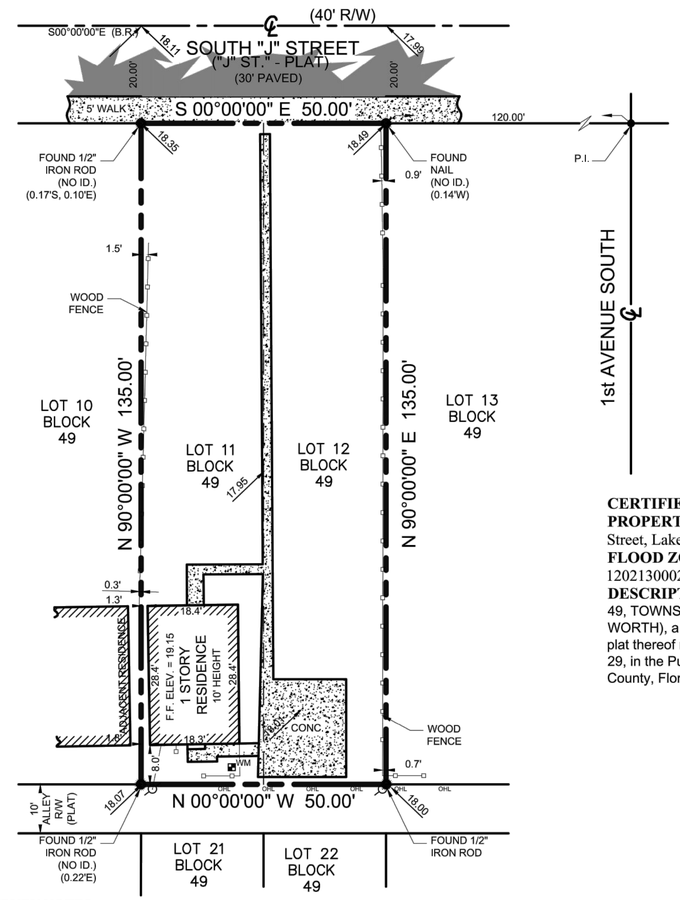

CERTIFIED TO: John Wright
PROPERTY ADDRESS: 112 South "J" Street, Lake Worth, FL 33460
FLOOD ZONE: C (FIRM 120213 1202130002C 9/30/82)
DESCRIPTION: Lot 11 and 12, Block 49, TOWNSITE OF LUCERNE (NKA LAKE WORTH), a subdivision according to the plat thereof recorded in Plat Book 2, Page 29, in the Public Records of Palm Beach County, Florida.

SURVEY NOTES:

1.) Lands shown hereon were not abstracted for easements and/or rights-of-way of record by this office
2.) Area of subject parcel = 6,750 square feet (0.155 acres).
3.) Elevations shown hereon are based on N.G.V.D. 1929.
a) Originating benchmark = ref. S-42,789-A
b) = existing elevation (typical).
4.) No underground improvements located.
5.) All bearings and distances shown hereon are plat and measured unless otherwise noted.
6.) This firms "Certificate of Authorization" number is "LB 6838".

BOUNDARY SURVEY

This survey is not valid without embossed surveyor's seal and/or an authenticated electronic signature and authenticated electronic seal.

Registered Land Surveyor, Florida Certificate No.
MICHAEL J. MILLER #4034

LEGEND:

CALC.	=	CALCULATED	(P)	=	PLAT	P.I.	=	POINT OF INTERSECTION		=	ASPHALT PAVEMENT
C.B.S.	=	CONCRETE BLOCK STRUCTURE	R	=	RADIUS	P.O.C.	=	POINT OF COMMENCEMENT		=	CONCRETE FLATWORK
CONC. MON.	=	CONCRETE MONUMENT	Δ	=	CENTRAL "DELTA" ANGLE	P.O.B.	=	POINT OF BEGINNING		=	PAVER BRICK FLATWORK
CONC.	=	CONCRETE	L	=	ARC LENGTH	R/W	=	RIGHT OF WAY	WM	=	WOOD POWER POLE
D.E.	=	DRAINAGE EASEMENT	CH.B.	=	CHORD BEARING	x x	=	CHAIN LINK FENCE		=	WATER METER
U.E.	=	UTILITY EASEMENT	N.G.V.D.	=	NATIONAL GEODETIC VERTICAL DATUM		=	WOOD FENCE		=	FIRE HYDRANT
P.E.	=	POOL EQUIPMENT	O.R.B.	=	OFFICIAL RECORD BOOK		=	METAL FENCE		=	CATCH BASIN
F.F.EL.	=	FINISHED FLOOR ELEVATION	P.B.	=	PLAT BOOK		=	CENTERLINE		=	SANITARY MANHOLE
EL.	=	ELEVATION	P.C.	=	POINT OF CURVATURE		=	EASEMENT			
(B.R.)	=	BEARING REFERENCE	P.T.	=	POINT OF TANGENCY		=	COVERED			
(D)	=	DEED	P.R.C.	=	POINT OF REVERSE CURVATURE	OHL OHL	=	OVERHEAD LINES			
(M)	=	MEASURED	P.C.C.	=	POINT OF COMPOUND CURVATURE		=	LOT TIE			

SCALE:	1" = 20'	MILLER LAND SURVEYING 1121 LAKE AVENUE LAKE WORTH, FLORIDA 33460 PHONE: (561) 586-2669 - FAX: (561) 582-0151 www.millersurveying.com e-mail: orders@millersurveying.com	REF: S83/36
DRAWN BY:	K.MILLER		PREV. JOB NO'S.
FIELD WK:	M.M. / B.M.		JOB NO. Y160710
DATE:	08/17/2016		S - 48,063

These drawings have a local state and federal copyright and are property of the Juan Contin, Architect. They are not to be used on other projects or extension of this project except by written agreements with Juan Contin, Architect. No design changes which alter the intent of the drawings or specifications are to be made without obtaining written permission from Juan Contin, Architect.

CONTIN
ARCHITECTURE AND DESIGN

JUAN CRISTOBAL CONTIN
FL LICENSE # AR94935
826 SOUTH FEDERAL
HIGHWAY SUITE #3
LAKE WORTH, FL 33460

TELEPHONE +1-561-249-4007
FAX +1-305-704-3878
EMAIL CDGPLANS@GMAIL.COM

JUAN CRISTOBAL CONTIN
FL LICENSE # AR94935

826 SOUTH FEDERAL HIGHWAY
SUIT #4
LAKE WORTH, FL 33460

JOHN WRIGHT
112 SOUTH J STREET
LAKE WORTH, FL 33460

WRIGHT RESIDENCE

Date 9-06-2016
Issued
Drawn BB
Checked JC
Revisions

AS SHOWN

SURVEY / SITE PHOTOS

S-01

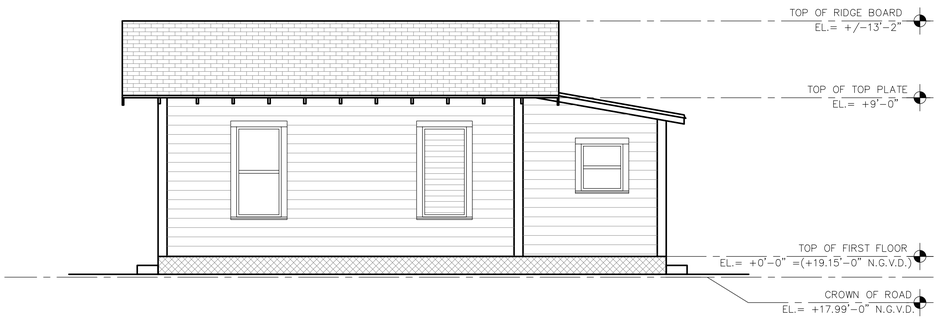

SOUTH ELEVATION (LEFT SIDE)

SCALE : 1/4" = 1'-0"

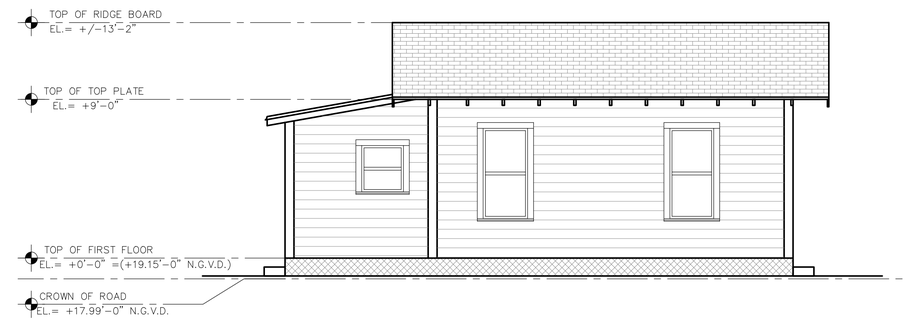

NORTH ELEVATION (RIGHT SIDE)

SCALE : 1/4" = 1'-0"

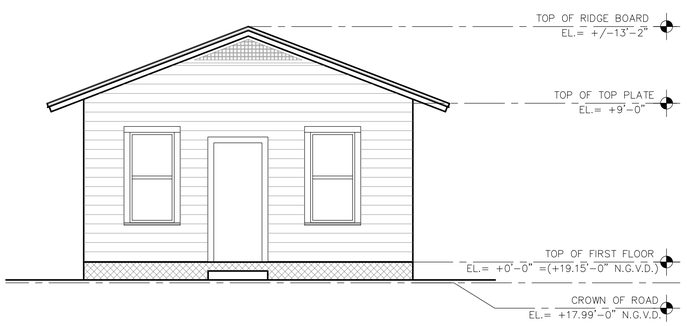

WEST ELEVATION (FRONT)

SCALE : 1/4" = 1'-0"

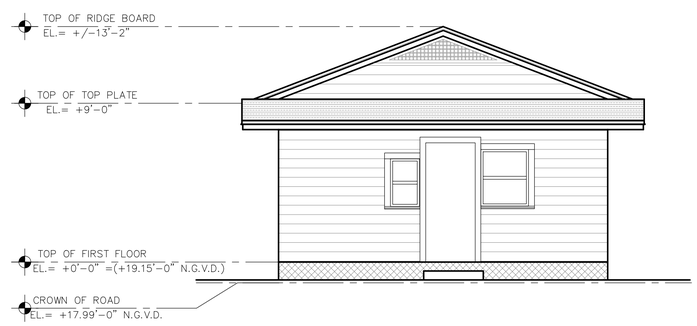

EAST ELEVATION (REAR)

SCALE : 1/4" = 1'-0"

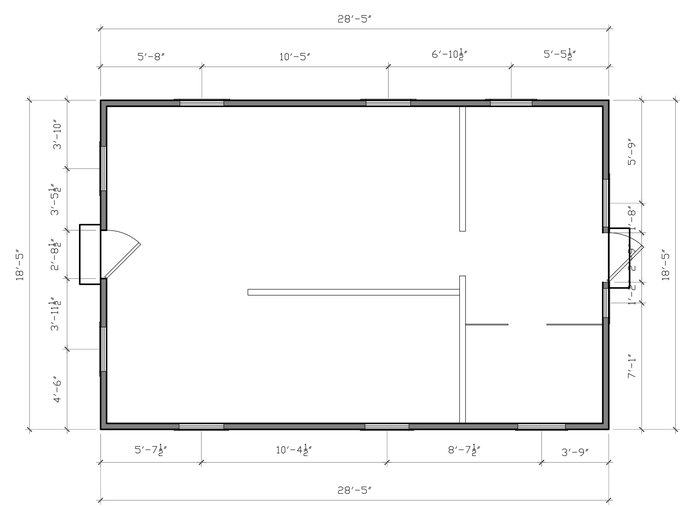

GROUND FLOOR PLAN

SCALE : 1/4" = 1'-0"

These drawings have a local state and federal copyright and are property of the Juan Contin, Architect. They are not to be used on other projects or extension of this project except by written agreements with Juan Contin, Architect. No design changes which alter the intent of the drawings or specifications are to be made without obtaining written permission from Juan Contin, Architect.

CONTIN
ARCHITECTURE AND DESIGN

JUAN CRISTOBAL CONTIN
FL LICENSE # AR94935
826 SOUTH FEDERAL
HIGHWAY SUITE #3
LAKE WORTH, FL 33460

TELEPHONE +1-561-249-4007
FAX +1-305-704-3878
EMAIL CDGPLANS@GMAIL.COM

JUAN CRISTOBAL CONTIN
FL LICENSE # AR94935

826 SOUTH FEDERAL HIGHWAY
SUIT #4
LAKE WORTH, FL 33460

JOHN WRIGHT

112 SOUTH J STREET

LAKE WORTH, FL 33460

WRIGHT RESIDENCE – BUILDING 02

Date 9-06-2016

Issued

Drawn BB

Checked JC

Revisions

AS SHOWN

EXISTING CONDITIONS

A-01

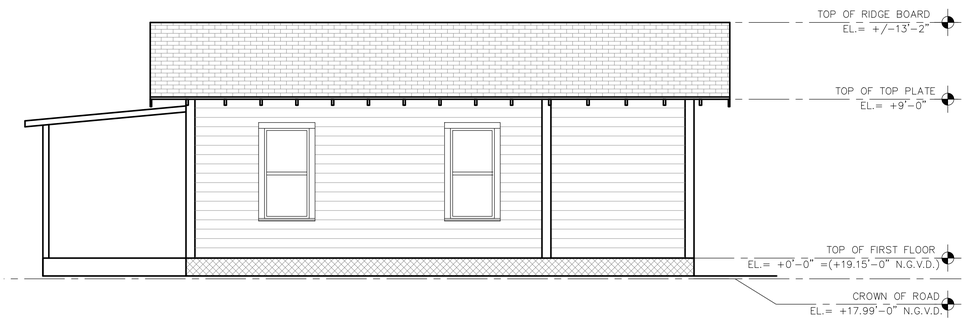

SOUTH ELEVATION (LEFT SIDE)

SCALE : 1/4" = 1'-0"

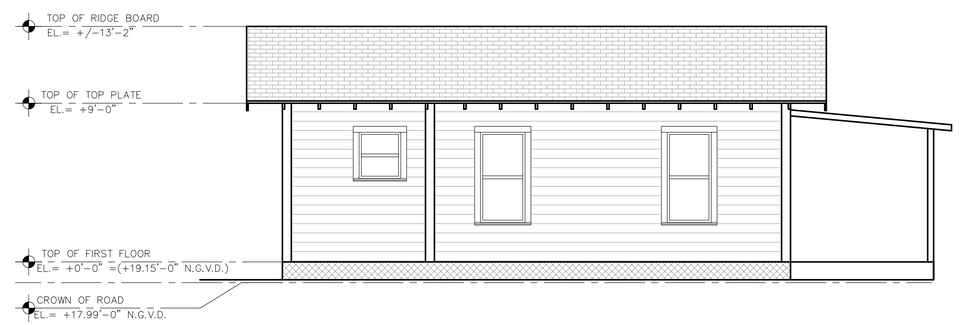

NORTH ELEVATION (RIGHT SIDE)

SCALE : 1/4" = 1'-0"

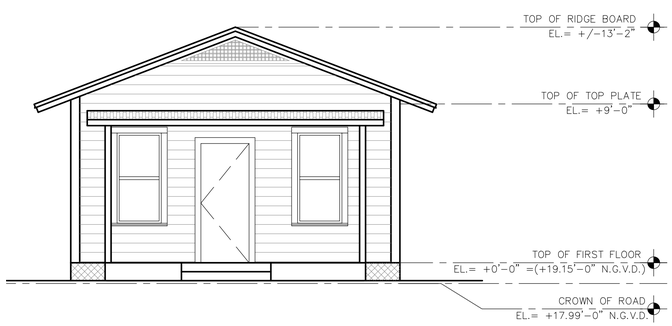

WEST ELEVATION (FRONT)

SCALE : 1/4" = 1'-0"

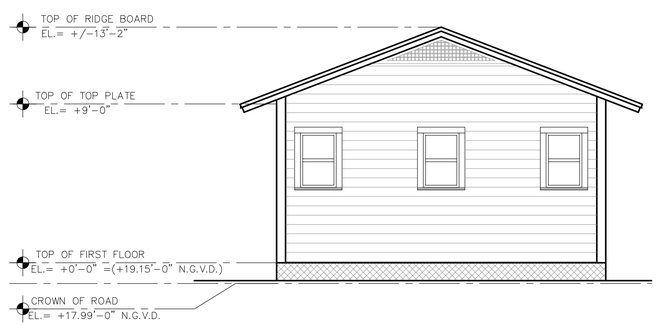

EAST ELEVATION (REAR)

SCALE : 1/4" = 1'-0"

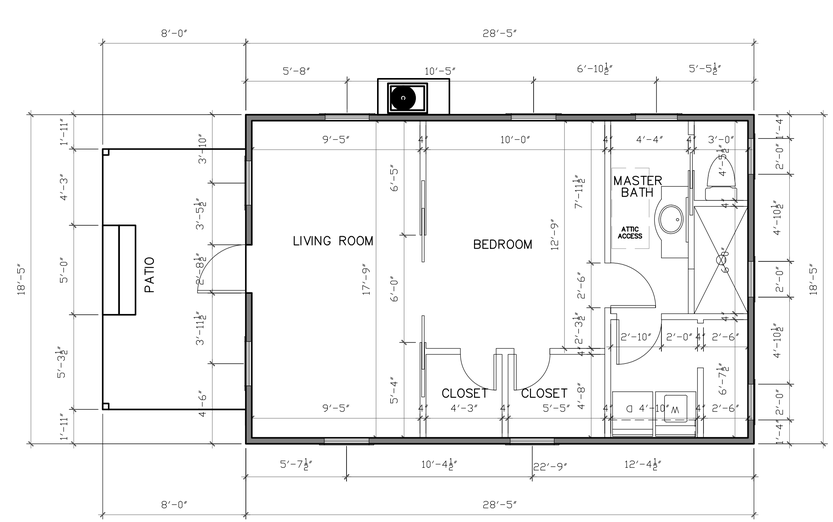

GROUND FLOOR PLAN

SCALE : 1/4" = 1'-0"

These drawings have a local state and federal copyright and are property of the Juan Contin, Architect, They are not to be used on other projects or extension of this project except by written agreements with Juan Contin, Architect, No design changes which alter the intent of the drawings or specifications are to be made without obtaining written permission from Juan Contin, Architect.

CONTIN
ARCHITECTURE AND DESIGN

JUAN CRISTOBAL CONTIN
FL LICENSE # AR94935
826 SOUTH FEDERAL
HIGHWAY SUITE #3
LAKE WORTH, FL 33460

TELEPHONE +1-561-249-4007
FAX +1-305-704-3878
EMAIL CDGPLANS@GMAIL.COM

JUAN CRISTOBAL CONTIN
FL LICENSE # AR94935
826 SOUTH FEDERAL HIGHWAY
SUIT #4
LAKE WORTH, FL 33460

JOHN WRIGHT
112 SOUTH J STREET
LAKE WORTH, FL 33460

WRIGHT RESIDENCE – BUILDING 02

Date	9-06-2016
Issued	
Drawn	BB
Checked	JC

Revisions

AS SHOWN

PROPOSED PLAN

A-02

These drawings have a local state and federal copyright and are property of the Juan Contin, Architect.
They are not to be used on other projects or extension of this project except by written agreements with Juan Contin, Architect. No design changes which alter the intent of the drawings or specifications are to be made without obtaining written permission from Juan Contin, Architect.

CONTIN
ARCHITECTURE AND DESIGN

JUAN CRISTOBAL CONTIN
FL LICENSE # AR94935
826 SOUTH FEDERAL
HIGHWAY SUITE #3
LAKE WORTH, FL 33460

TELEPHONE +1-561-249-4007
FAX +1-305-704-3878
EMAIL CDGPLANS@GMAIL.COM

JUAN CRISTOBAL CONTIN
FL LICENSE # AR94935

826 SOUTH FEDERAL HIGHWAY
SUIT #4
LAKE WORTH, FL 33460

JOHN WRIGHT
112 SOUTH J STREET
LAKE WORTH, FL 33460

WRIGHT RESIDENCE – BUILDING 02

Date 9-06-2016
Issued
Drawn BB
Checked JC
Revisions

AS SHOWN

RENDERING

A-03

WinDoor
INCORPORATED

7000 Series
Sliding Glass Door System
Impact or Non Impact

Aluminum Panel Sizes Up To 5'0 x 8'2-inch High Door

Systems: Available in Bypass & Pocket door units with multi configurations.

Featuring 2 - 3 & 4 Track Sliding Glass Door Systems

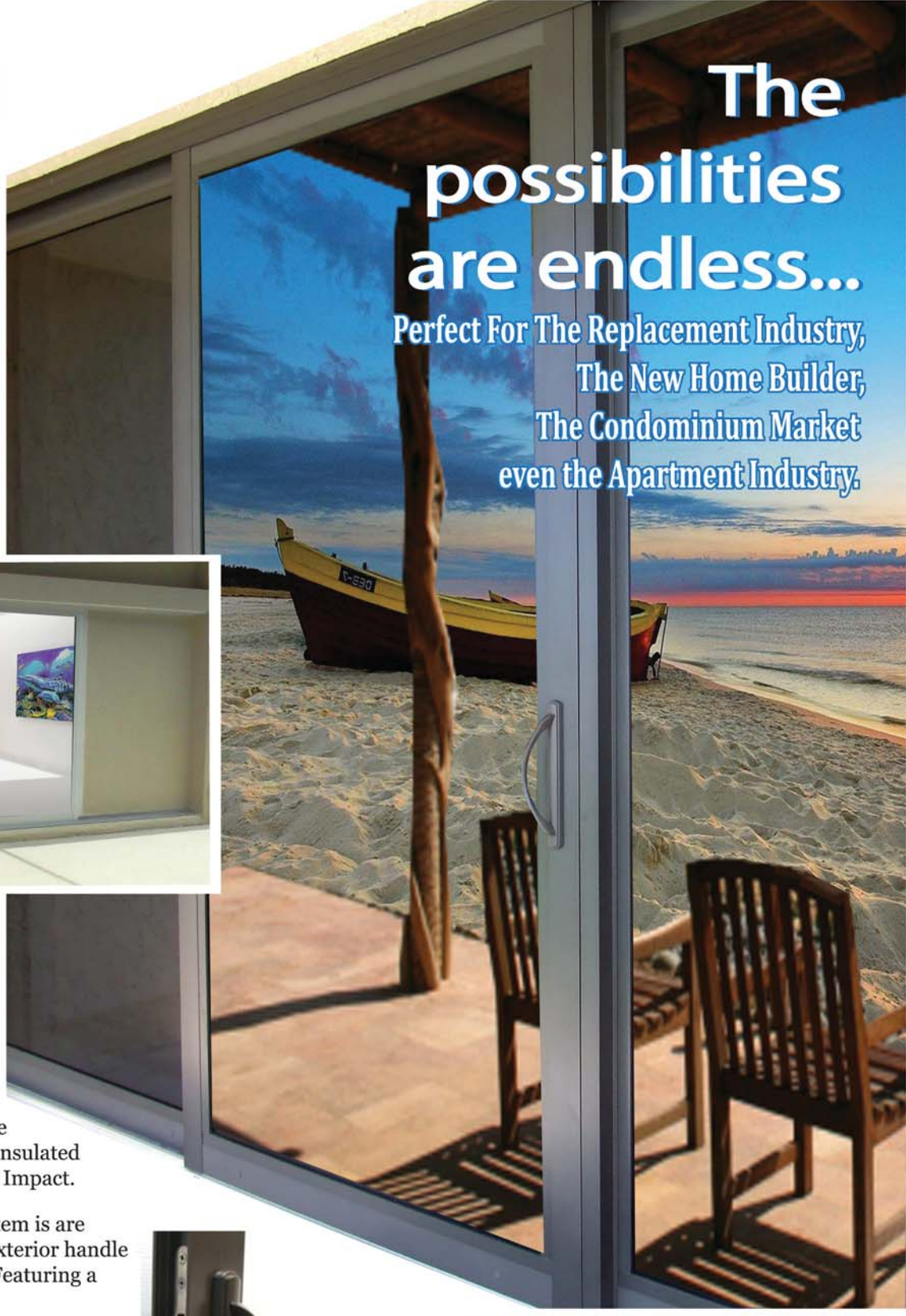

Color Finishes:
White & Bronze also available in South Beach Silver Clear Anodized 215 Class 1. AAMA 2603, 2604* and 2605 - Custom Color Match Finishes always available.

Low - E Glass Options:
Offering a wide range of low-e glass choices. Single glazed - Insulated Non-Impact & Insulated Large Missile Impact.

Handles: The EURO Handle System is are Standard Metal full-size interior and exterior handle that is available in a variety of colors. Featuring a large easy to operate pull handle.

Optional Recessed Euro Pull Handle Will Not Allow Panels To bypass by Special Request

Locking Systems Anti-Slam:
Adjustable stainless steel dual-point mortise locks provide Level 10 Forced Entry Resistance as tested to AAMA standards. Secondary locking system available, exterior key lock available as well.*

Tested Tuff... Design Performance:

7000 Series 5'0 x 8'2-inch High Door
Non-Impact & Impact Tested *Up To +75 / -75*
7000 H.P Series 4'0 x 8'2-inch High Door
Non-Impact & Impact Tested *+80 / -90*

MIAMI-DADE COUNTY
FLORIDA STATE PRODUCT APPROVAL
tdi
NFRC National Fenestration Rating Council
MADE IN AMERICA

www.WinDoorInc.com

See other side for more details

WinDoor 7000 Series Sliding Glass Door System

Tested for High Performance Capabilities: **Miami-Dade, AMMA/NWDA & ASTM Certified To Heavy Commercial Standards -** Our Sliding Glass Doors not only meets the most stringent of Miami/Dade product approvals TAS 201, TAS 202, TAS 203, Florida State Wide Product Approvals & (TDI) Texas Department of Insurance... We also tested ASTM E-1300, E-1886 & E-1996 with AAMA 506 impact codes required by states in the United States of America.

Panels: have a depth of 1-5/16" with 4" wide stiles and rails.

Sizes: 7000 Series 5 feet wide x 8 feet 2 inches - 7000 H.P 4 feet wide x 8 feet 2 inches

Master Frame: Installation trim pack for versatility installation for new construction or retrofit. Beauty caps to conceal stainless steel fasteners.

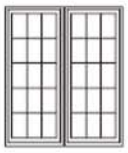

Muntins*: Inside and outside muntins enhance the design. Internal muntins available for insulated glass panels.

Dual Fin-Seal Weather-stripping: Two sets of polypropylene fiber weather stripping concealed in panel perimeters. Keeps the elements out and reduces energy costs year after year.

Internal Structural Reinforcement: 6061-T6 aluminum alloy reinforcement added to maintain both the architectural design integrity and provide higher design pressures.

Impact-Resistant Glazing: Large missile 7/16"& 9/16" single glazed and 3/4" tempered insulated glass. Protects against damage caused by windborne debris and intruders. and greatly reduces sound transmission. Eliminates the need for unsightly and inconvenient storm shutters. We call it... **Passive Protection 24/7**

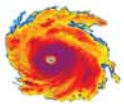

Non-Impact Glazing: Tempered glass 3/16" & 1/4" and 3/4" tempered insulated glass for locations not requiring impact glazing.

Screens: Heavy-duty standard box exterior screen with frame depth of 1-1/8" x 2-5/8". Featuring adjustable stainless steel 1-5/8"Delrin ® wheels. Featuring: BETTERVUE® Screens (Standard)

See the view, not the screen

True Coastal Hardware Locking Hardware and Rollers: Standard Stainless Seel housed adjustable tandem rollers with 1-5/8" Delrin ® wheels. Insures trouble-free operation in salt air environments allowing the doors to operate easily and quietly.

WinDoor Offers A Unlimited Number Of Configurations and Panels

These are just a few of our Sliding Glass Door Configurations - Also Available WITH or WITHOUT Pockets.

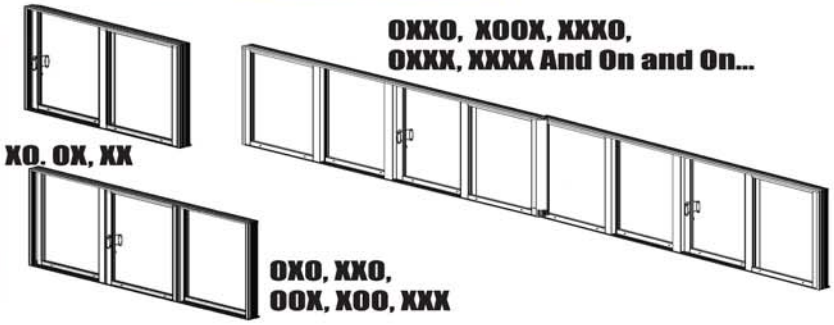

(X) Operable Or Movable Panels (O) Stationary or Fixed Panels

SILL RISER OPTIONS

Whatever the demands of your specific location, we can provide the sill riser to handle the rain. (See the chart below.)

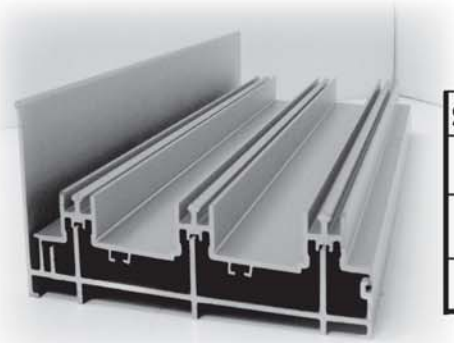

Offers 3 Different Sill Riser Heights

Sill Riser Height	Lab Results
2- 1/2"	9.0 psf
3- 1/8"	12.0 psf
4- 1/4"	18.0 psf

The 7000 Offers 3 Different Blade Track/Sill Options.

2-Track sill depth = 3- 9/16"

3-Track Sill Depth = 5- 1/2"

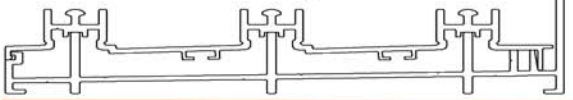

4-Track Sill Depth = 7- 1/2"

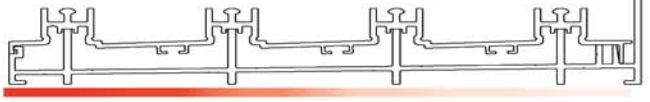

WinDoor Incorporated reserves the right to change materials design and or construction without notice or liability

2/2013

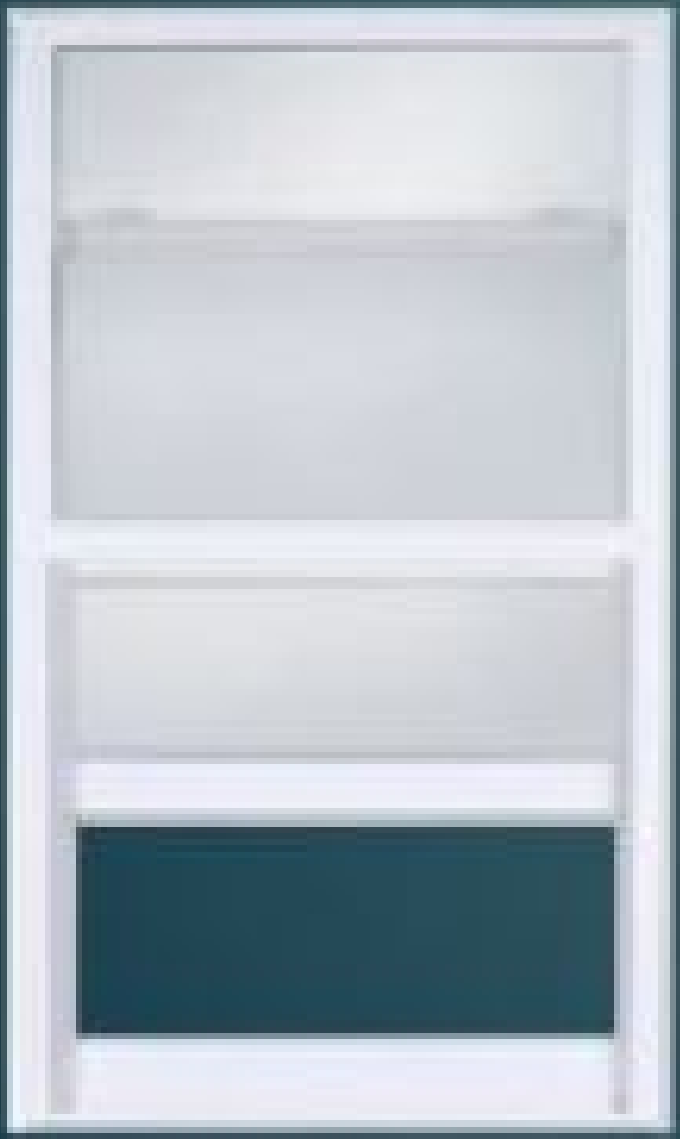

Single Hung Window

Fixed
Window

Si

Single French Door

MILLER
LAND
PLANNING, INC.

508 E. Boynton Beach Boulevard
Boynton Beach, FL 33435

Phone ■ (561)736.8838
Fax ■ (561)736.8079

BERMUDA CAY
PCN: 38-43-44-21-15-109-0090

Original: October 11, 2016

Request for Continuance - HRPB Project Number 15-00100114

On behalf of D.F. Ryan Management Services, Inc., please accept this letter as a formal request for a continuance at the October 19, 2016 Historic Resources Preservation Board meeting in order to give the project architect more time to implement the revisions requested by the Board. Therefore, we are requesting to resubmit plans for consideration at the November 9th HRPB meeting. In the interim, we will continue to work closely with City staff toward successful completion of this project. If you have any questions or concerns regarding this matter, please feel free to contact our office.

Respectfully,

Curtis Dubberly
Associate Planner

Lake Worth, Florida. The Art of Florida Living.sm

City Of Lake Worth
Department for Community Sustainability
Planning, Zoning and Historic Preservation Division
1900 Second Avenue North · Lake Worth · Florida 33461· Phone: 561-586-1687

MEMORANDUM DATE: October 12, 2016

AGENDA DATE: October 19, 2016

TO: Chair and Members of the Historic Resources Preservation Board

RE: **1111 North Lakeside Drive**

FROM: Aimee N. Sunny, Senior Preservation Coordinator
Department for Community Sustainability

TITLE: HRPB Project Number 16-00100193: Consideration of a Certificate of Appropriateness (COA) for window and door replacement for the single-family structure located at **1111 N Lakeside Drive**; PCN# 38-43-44-21-15-358-0140. The subject property was constructed in 1951 and is a contributing resource within the Northeast Lucerne Local Historic District.

OWNER/APPLICANT: Ron Dixon
1111 North Lakeside Drive
Lake Worth, FL 33460

BACKGROUND:

This case was heard before the HRPB at the September 14, 2016, regular meeting, and the Board voted to continue the case. Staff reached out to the contractor and requested additional information regarding the request. The contractor and homeowner have provided a letter, included as Attachment #2, stating that the windows are in poor condition, and not repairable, and they agree to accept the Staff recommended Conditions of Approval for the requested replacement windows.

The single-family structure at 1111 North Lakeside Drive was designed by architect Agnes Ballard in 1951 in a Ranch style. The property has public frontage on North Lakeside Drive to the east. The building was constructed in a Ranch style with many elements of Mid-Century Masonry Vernacular architecture, and still retains many of its character defining features. These character defining features include the decorative front porch and columns, the original silver aluminum awning windows, the decorative brickwork and trim, clamshell shutters, a recessed panel garage door, brick planter beds, and concrete masonry construction with a smooth stucco finish.

The original architectural plans for the building are available in the City's property files. Based on the information in the property file, some exterior alterations have occurred over time, including roof replacement from flat white concrete tile to dimensional asphalt shingle, enclosure of the carport, and two small additions to the rear. Although the original architectural drawings show the proposed windows as steel casements, the initial property appraiser's card from January 1952 lists the window type as aluminum awning. Overall, the building retains a high degree of historic integrity of location, setting, materials, and design, and is an excellent example of the Ranch style.

REQUEST:

The Applicant is proposing exterior modifications to the building as follows:

1) Replace all of the existing original silver awning windows with white aluminum casement, single-hung, and horizontal roller windows, per the plans and photos provided.
2) Replace the existing front door with a single full-light French door.
3) Replace the existing recessed short panel garage door with a recessed short panel garage door.
4) Remove the entire west wall of the rear Florida room, and install an OXXO sliding glass door.

COMPREHENSIVE PLAN CONSISTENCY:

It is the analysis of Staff that the project, as proposed, is not fully consistent with the Comprehensive Plan goals and objectives concerning historic preservation and housing due to the fact that the Applicant is proposing a change that will have an adverse effect on the historic integrity of the property. Specifically, the request is in conflict with these objectives:

Goal 1.4 Encourage preservation and rehabilitation of historic and natural resources and where appropriate restrict development that would damage or destroy these resources. (Objective 1.4.2)

Objective 3.2.5: To encourage the identification of historically significant housing, and to promote its preservation and rehabilitation as referenced by the Surveys of Historic Properties conducted for the City of Lake Worth.

Policy 3.2.5.1: Properties of special value for historic, architectural, cultural or aesthetic reasons will be restored and preserved through the enforcement of the City's Historic Preservation Ordinance to the extent feasible.

ANALYSIS:

Zoning

The proposed alterations are not in conflict with the development requirements in the City's Zoning Code.

Historic Preservation

Staff has reviewed the documentation and materials provided in this application and outlined the applicable guidelines and standards found in the City's Historic Preservation Ordinance, detailed in Attachment 1 – Decision Criteria.

The National Park Service and Secretary of the Interior's Standards have very specific criteria regarding replacement of historic materials. Specifically, Standards 2, 5, and 6 apply in this situation:

Standard 2 - The historic character of a property will be retained and preserved. The removal of distinctive materials or alteration of features, spaces, and spatial relationships that characterize a property will be avoided.

Standard 5 - Distinctive materials, features, finishes, and construction techniques or examples of craftsmanship that characterize a property will be preserved.

Standard 6 - Deteriorated historic features will be repaired rather than replaced. Where the severity of deterioration requires replacement of a distinctive feature, the new feature will match the old in design, color,

texture, and, where possible, materials. Replacement of missing features will be substantiated by documentary and physical evidence.

It is the analysis of Staff that the project as proposed is not compatible with the review criteria set forth in the City's Land Development Regulations Section 23.5-4, the City's Comprehensive Plan, and the Secretary of the Interior's Standards for Rehabilitation.

According to the Secretary of the Interior's Standards, distinctive materials that characterize a property shall be preserved. The original silver aluminum awning windows are an important character defining feature on this structure, and appear to be in good condition. The Applicant has not provided any information regarding the feasibility of repairing the existing windows.

According to the Standards and the Code, the windows should be repaired if at all possible, and if repair is not possible, replacement windows should match the design, color, texture, and materials of the existing windows. Staff has recommended impact silver aluminum casement windows with exterior raised applied triangular muntins to replicate the appearance of the original windows. Clear anodized, or silver mill finish windows would most closely replicate the existing color and appearance of the silver windows.

The Applicant's request utilizes casement windows with exterior raised applied muntins on the entire front elevation, which is compatible with the Code and Staff recommendation. The requested front door is compatible with the design style of the structure. The proposed garage door is compatible with the Code and Staff recommendation. The Applicant has requested single-hung windows on the side and rear elevations. Because these are secondary elevations, the existing windows are two-pane awning windows, and the Applicant is proposing the casement style windows on the front elevation, Staff is in support of the proposal. For openings 10 and 14, Staff recommends (2) 2/2 single-hung windows, in order to replicate the existing configuration. Where 3-pane awning windows exist on the side elevations, Staff recommends replacement with 2/2 single-hung or 3-light casement windows.

Public Comment
At the time of publication of this report, Staff has not received any public comment regarding this project.

CONSEQUENT ACTION:
Approve the application; approve the application with conditions; continue the hearing to a date certain to request additional information; or deny the application.

RECOMMENDATION:
Staff recommends that the Board discuss the feasibility of repairing and maintaining the existing windows. If hurricane impact protection is requested, the Applicant could explore alternate means of protection including removable shutter panels or fabric screens. If the windows are repairable, then the proposal for replacement does not meet the Secretary of the Interior's Standards for Rehabilitation, does not meet the criteria set forth in the City of Lake Worth Land Development Regulations §23.5-4(k), and will have an adverse effect on the integrity and character of the property.

If the Board decides that repair is not a feasible option, and the Board determines that replacement windows and doors are appropriate for the structure, Staff recommends the following conditions:

1) Replacement windows on the east (front) elevation shall be aluminum casement and fixed windows as proposed, match the original window opening sizes, and have a divided light pattern that replicates the original aluminum awning windows.
2) Replacement windows on the north, south, and west elevations (sides and rear) may be replaced with either casement or single-hung windows. Where 2-light awning windows exist, a 1/1 single-hung window may be used. Where 3-light awning windows exist, they shall be replaced with 2/2 (4 light) single-hung windows.
3) For openings 10 and 14, the replacement windows shall be (2) 2/2 single-hung windows, in order to replicate the existing configuration.
4) The divided light pattern shall be created by using exterior raised applied triangular muntins to replicate the pane configuration of the awning windows. No flat or internal muntins shall be allowed. The proper divided light pattern and muntin profile shall be reviewed by Staff at permitting.
5) The aluminum replacement windows shall have a clear anodized or silver mill finish in order to most closely replicate the original aluminum windows.
6) The Applicant shall utilize light gray screens rather than dark vinyl screens in order to minimize the impact of the panes of glass sitting in different visual planes.
7) No reflective or mirrored glass shall be used.
8) The west elevation of the rear Florida room may be replaced with an OXXO sliding glass door as proposed.
9) The garage door shall be replaced with a recessed short panel door, as shown in the submittal material.
10) All original clamshell shutters shall be maintained on the structure.
11) All work shall be subject to staff review during permitting and inspection during construction.

POTENTIAL MOTIONS:

I MOVE TO **APPROVE** HRPB 16-00100193: Consideration of a Certificate of Appropriateness (COA) for window and door replacement for the subject building located at **1111 North Lakeside Drive**, with the conditions as recommended by Staff, based upon the preponderance of competent substantial evidence, and pursuant to the City of Lake Worth Land Development Regulations Section 23.5-4.

I MOVE TO **DENY** HRPB 16-00100193: Consideration of a Certificate of Appropriateness (COA) for window and door replacement for the subject building located at **1111 North Lakeside Drive** because the Applicant has not established by a preponderance of the competent substantial evidence that the application is in compliance with the City of Lake Worth Land Development Regulations Section 23.5-4, the Secretary of the interiors Standards for the Rehabilitation of Historic Properties, and the City's Comprehensive Plan.

ATTACHMENTS:

1. Decision Criteria
2. Justification Statement
3. Photographs
4. Floor plan and survey
5. Proposed Materials
6. Original Architectural Drawings

LOCATION MAP

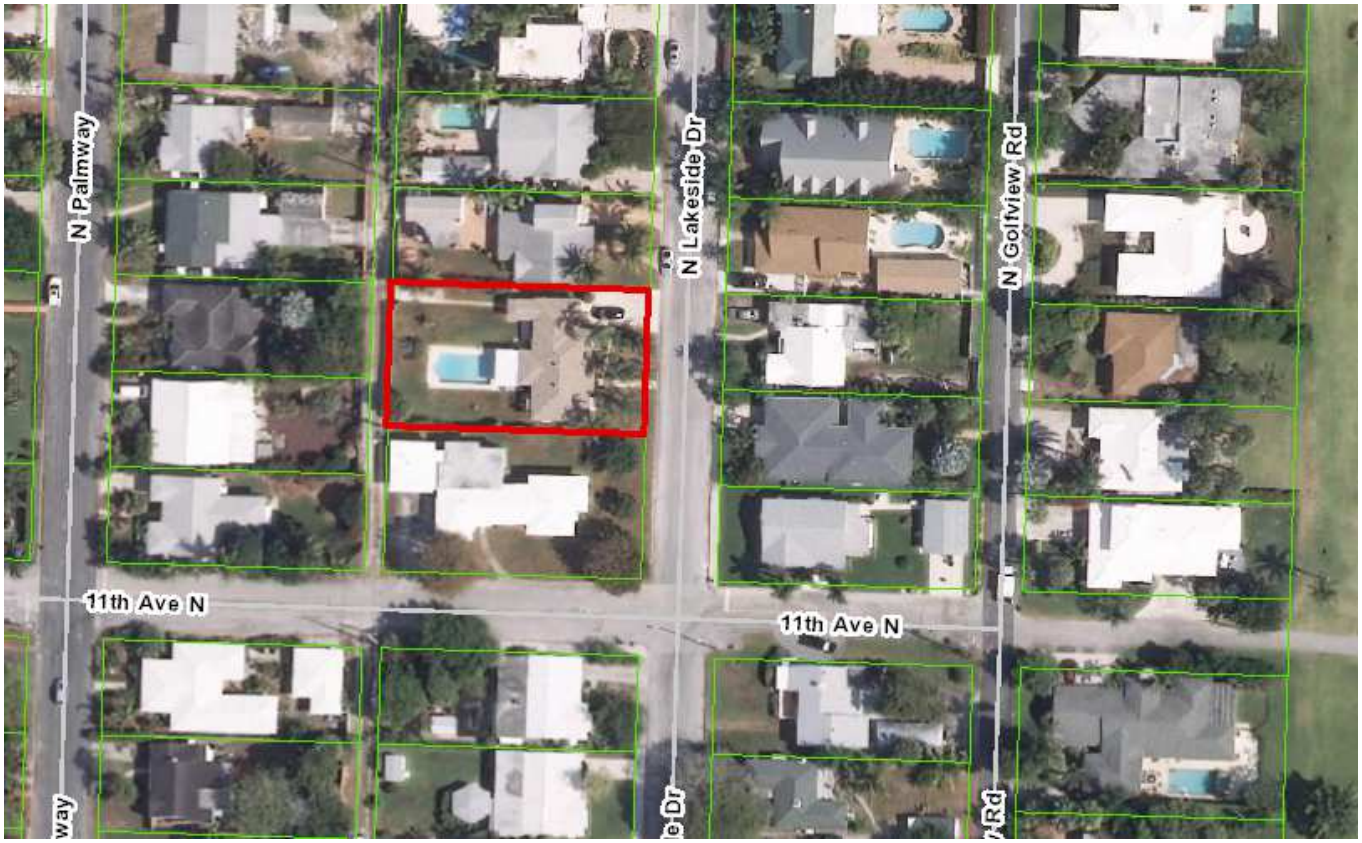

MEMORANDUM

DATE: October 12, 2016

TO: Chair and Members of the Historic Resources Preservation Board

FROM: Aimee N. Sunny, Preservation Planning Coordinator
Department of Community Sustainability

SUBJECT: **HRPB Project Number 16-00100193:** Consideration of a Certificate of Appropriateness (COA) for window and door replacement for the single-family structure located at **1111 N Lakeside Drive**; PCN# 38-43-44-21-15-358-0140. The subject property was constructed in 1951 and is a contributing resource within the Northeast Lucerne Local Historic District.

HRPB Meeting Date: October 19, 2016

Per Section 23.5-4k (1) of the historic preservation ordinance, the Board shall use the following criteria in making a determination:

A. What is the effect of the proposed work on the landmark or the property upon which such work is to be done?
Response: It is the opinion of Staff that the work proposed would have a partial adverse effect on the historic appearance of the building, and is not fully compatible with the design or style.

B. What is the relationship between such work and other structures on the landmark site or other property in the historic district?
Response: The proposed work will have no direct physical effect on any surrounding properties within the surrounding Northeast Lucerne Local Historic District, however it will have an indirect visual effect on the district.

C. To what extent will the historic, architectural, or archaeological significance, architectural style, design, arrangement, texture, materials and color of the landmark or the property be affected?
Response: The Applicant is proposing work that is not compatible with the architectural design and detailing of the building by removing the historic aluminum awning windows and replacing the majority of them with white aluminum windows (horizontal roller, single-hung, and casement), and the remainder of them with white aluminum sliding doors.

D. Would denial of a certificate of appropriateness deprive the property owner of reasonable beneficial use of his property?
Response: No, the denial of this COA as submitted does not prevent the Applicant from potentially proposing other alterations to the structure, nor would it make the building uninhabitable.

E. Are the applicant's plans technically feasible and capable of being carried out within a reasonable time?
Response: Yes.

F. Do the plans satisfy the applicable portions of the general criteria contained in the United States Secretary of the Interior's Standards for Rehabilitation then in effect or as they may be revised from time to time? The current version of the Secretary's Guidelines provides as follows:

(1) A property shall be used for its historic purpose or be placed in a new use that requires minimal change to the defining characteristics of the building and its site and environment.
Response: No change to the use of the property is proposed.

(2) This historic character of the property shall be retained and preserved. The removal of historic materials or alteration of features and spaces that characterize a property shall be avoided.
Response: The Applicant is proposing to remove multiple windows that are character-defining features of this property.

(3) Each property shall be recognized as a physical record of its time, place and use. Changes that create a false sense of historical development, such as adding conjectural features or architectural elements from other buildings, shall not be undertaken.
Response: Not applicable to this project.

(4) Most properties change over time; those changes that have acquired historic significance in their own right shall be retained and preserved.
Response: Not applicable to this project.

(5) Distinctive features, finishes and construction techniques or examples of craftsmanship that characterize a historic property shall be preserved.
Response: The original windows are an example of craftsmanship that characterizes not only this structure, but also the time period and architectural style in general.

(6) Deteriorated architectural features shall be repaired rather than replaced, wherever possible. In the event replacement is necessary, the new material should match the material being replaced in composition, design, color, texture, and other visual qualities.
Response: The proposed window replacement does not match the existing in style, composition, design, or color.

Repair or replacement of missing architectural features should be based on accurate duplications of features, substantiated by historical, physical, or pictorial evidence rather than on conjectural designs or because the different architectural elements from other buildings or structures happen to be available for relocation.
Response: Not applicable to this project.

(7) Chemical or physical treatments, such as sandblasting, that cause damage to historic materials, shall not be used. The surface cleaning of structures, if appropriate, shall be undertaken using the gentlest means possible.
Response: Not applicable to this project.

(8) Significant archeological resources affected by a project shall be protected and preserved. If such resources must be disturbed, mitigation measures shall be undertaken.
Response: Not applicable to this project.

(9) New additions, exterior alterations or related new construction shall not destroy historic materials that characterize the property. The new construction shall be differentiated from the old and shall be compatible with the massing, size, scale and architectural features to protect the historic integrity of the property and its environment.
Response: The proposed alterations remove historic windows that characterize the property.

(10) New additions and adjacent or related new construction shall be undertaken in such manner that, if removed in the future, the essential form and integrity of the historic building and its environment would be unimpaired.
Response: Not applicable to this project.

G. What are the effects of the requested change on those elements or features of the structure which served as the basis for its designation and will the requested changes cause the least possible adverse effect on those elements or features?
Response: It is the opinion of Staff that the historic character of the property would be adversely affected by the proposed project as submitted by the Applicant, as outlined above. The requested exterior alterations do not represent the least possible adverse effect on the property. There are alternate options, including repair of the existing windows, and replacement in a clear anodized finish.

Section 23.5-4k (2). *Additional guidelines for alterations.*

In approving or denying applications for certificates of appropriateness for alterations, the HRPB shall also consider the following additional guidelines:

A. Is every reasonable effort being made to provide a compatible use for a property that requires minimal alteration of the building, structure or site and its environment, or to use the property for its originally intended purpose?
Response: No change to the use of the property is proposed.

B. Are the distinguishing original qualities or character of a building, structure or site and its environment being destroyed? The removal or alteration of any historic material or distinctive architectural features shall be avoided whenever possible.
Response: The windows can be considered a distinctive architectural feature and should not be removed unless the level of deterioration is such that the windows cannot be repaired. In that case, the replacement windows should replicate the original windows as closely as possible.

C. When a certificate of appropriateness is requested to replace windows or doors, the HRPB shall permit the property owner's original design when the HRPB's alternative design would result in an increase in cost of thirty (30) percent above the owner's original cost. The owner shall be required to demonstrate to the HRPB that:
(1) The work to be performed will conform to the original window openings of the structure; and
Response: The applicant meets this criterion for the majority of windows, but is in conflict with this criterion at those locations where the applicant is proposing to replace existing awning windows with new sliding doors.

(2) That the replacement windows or doors with less expensive materials will achieve a savings in excess of thirty (30) percent over historically compatible materials otherwise required by this code.
Response: Staff must defer to the applicant.

10/14/16 Response to Staff Recommendations

The current windows although appear to be in good condition from the street view are not operable and the feasibility of finding new parts for the cranks, glazing seals and weather stripping is not available. On several windows they are screwed shut to the frames so that they can close which can cause an egress issue if left unresolved. So after review of the current windows and doors it is my recommendation as the General Contractor that the replacement of the windows and doors is the best alternative to regain proper operation. The new windows will also properly secure the home for severe storms, break ins, theft, energy efficiency, and noise reduction. This upgraded attribute will increase property value for this home and surrounding homes. All benefits that the current window units cannot provide even in perfect working order.

In order to stay in compatibility with the Historic Preservation and architectural features we would like to accept the staff's recommendations and to continue to use the original Silver frame (Clear Anadized Finish) on all windows and doors excluding the Overhead Garage Door which will remain the recessed short panel design. As quoted below from the Staffs recommendation we are willing to comply fully with these plans.

"The Applicant's request utilizes casement windows with exterior raised applied muntins on the entire front elevation, which is compatible with the Code and Staff recommendation. The requested front door is compatible with the design style of the structure. The proposed garage door is compatible with the Code and Staff recommendation. The Applicant has requested single-hung windows on the side and rear elevations. Because these are secondary elevations, the existing windows are two-pane awning windows, and the Applicant is proposing the casement style windows on the front elevation, Staff is in support of the proposal. For openings 10 and 14, Staff recommends (2) 2/2 single-hung windows, in order to replicate the existing configuration. Where 3-pane awning windows exist on the side elevations, Staff recommends replacement with 2/2 single-hung or 3-light casement windows."

1) Replacement windows on the east (front) elevation shall be aluminum casement and fixed windows as proposed, match the original window opening sizes, and have a divided light pattern that replicates the original aluminum awning windows.
2) Replacement windows on the north, south, and west elevations (sides and rear) may be replaced with either casement or single-hung windows. Where 2-light awning windows exist, a 1/1 single-hung window may be used. Where 3-light awning windows exist, they shall be replaced with 2/2 (4 light) single-hung windows.
3) For openings 10 and 14, the replacement windows shall be (2) 2/2 single-hung windows, in order to replicate the existing configuration.
4) The divided light pattern shall be created by using exterior raised applied triangular muntins to replicate the pane configuration of the awning windows. No flat or internal muntins shall be allowed. The proper divided light pattern and muntin profile shall be reviewed by Staff at permitting.
5) The aluminum window replacements shall have a clear anodized or silver mill finish in order to most closely replicate the original aluminum windows.

6) The Applicant shall utilize light gray screens rather than dark vinyl screens in order to minimize the impact of the panes of glass sitting in different visual planes.
7) No reflective or mirrored glass shall be used.
8) The west elevation of the rear Florida room may be replaced with an OXXO sliding glass door as proposed.
9) The garage door shall be replaced with a recessed short panel door, as shown in the submittal material.
10) All original clamshell shutters shall be maintained on the structure.
11) All work shall be subject to staff review during permitting and inspection during construction.

Criteria for Granting Certificates of Appropriateness

A) The effect of the proposed window and door replacement is very minor to windows on the front and sides of the home. The most obvious change is the windows frames will be white instead of aluminum in color. Horizontal muttons are added to casement windows to retain the original style of the awning windows that are original to the home. Single hung windows are used in openings that only had a two panel awning style window which are located on the sides and back of the house. A new garage door is also being installed using the same recessed panel style original to the home.

B) There is not relationship with the work being completed to any other structure, landmark or property in the historical district.

C) The windows frames are proposed to be white instead of aluminum in color.

D) The denial of the certificate would deprive the owner the ability to properly protect his home, family and possessions. Also the owner would be deprived of the ability to make his home more energy efficient, secure from theft, lower insurance costs, and protection from natural disasters.

E) There are no issues with the ability to carry out the proposed plans in a timely manner.

F) Interior Standards for Rehabilitation

1) The replacement of the windows will cause a minimal change to the properties' characteristics
2) Historical Character of the property will be maintained.
3) No changes to the architectural elements shall be undertaken.
4) Any changes that have occurred overtime shall also be preserved.
5) Features and finishes will be preserved.
6) There are no deteriorated features that require repair.
7) There are no need for physical treatments such as sandblasting to install the windows and doors.
8) There are no archeological resources know on the property and if so would not be disturbed during the installation of the windows or doors.
9) There are no additions to the properties floor plan.
10) The new components of the windows and doors could in the future be removed and the integrity of the building would not be compromised.

G) There are no effects on the elements of the structure which serve as the basis of the designation.

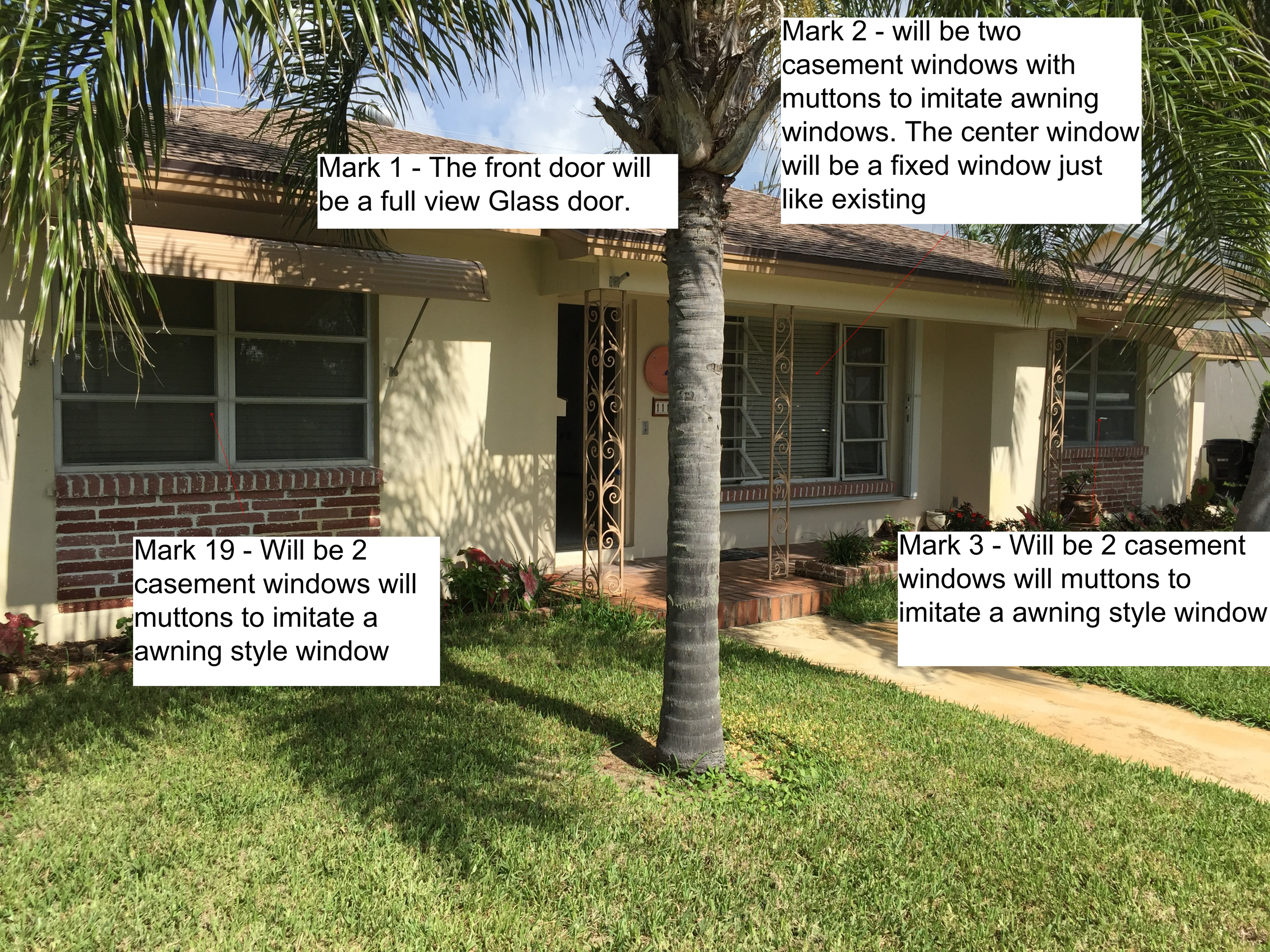
Mark 1 - The front door will be a full view Glass door.
Mark 2 - will be two casement windows with muttons to imitate awning windows. The center window will be a fixed window just like existing
Mark 19 - Will be 2 casement windows will muttons to imitate a awning style window
Mark 3 - Will be 2 casement windows will muttons to imitate a awning style window

Mark 20 - Garage Door will be a New recessed panel door similiar to existing.

Mark 17 will become a single hung window
Mark 18 - Will become a Single Hung window
ADT

Mark 15 will become a
Single Hung Window
Mark 16 will be a single
hung window
Mark 14 will become a
Horizontal Roller 1/3 1/3 1/3

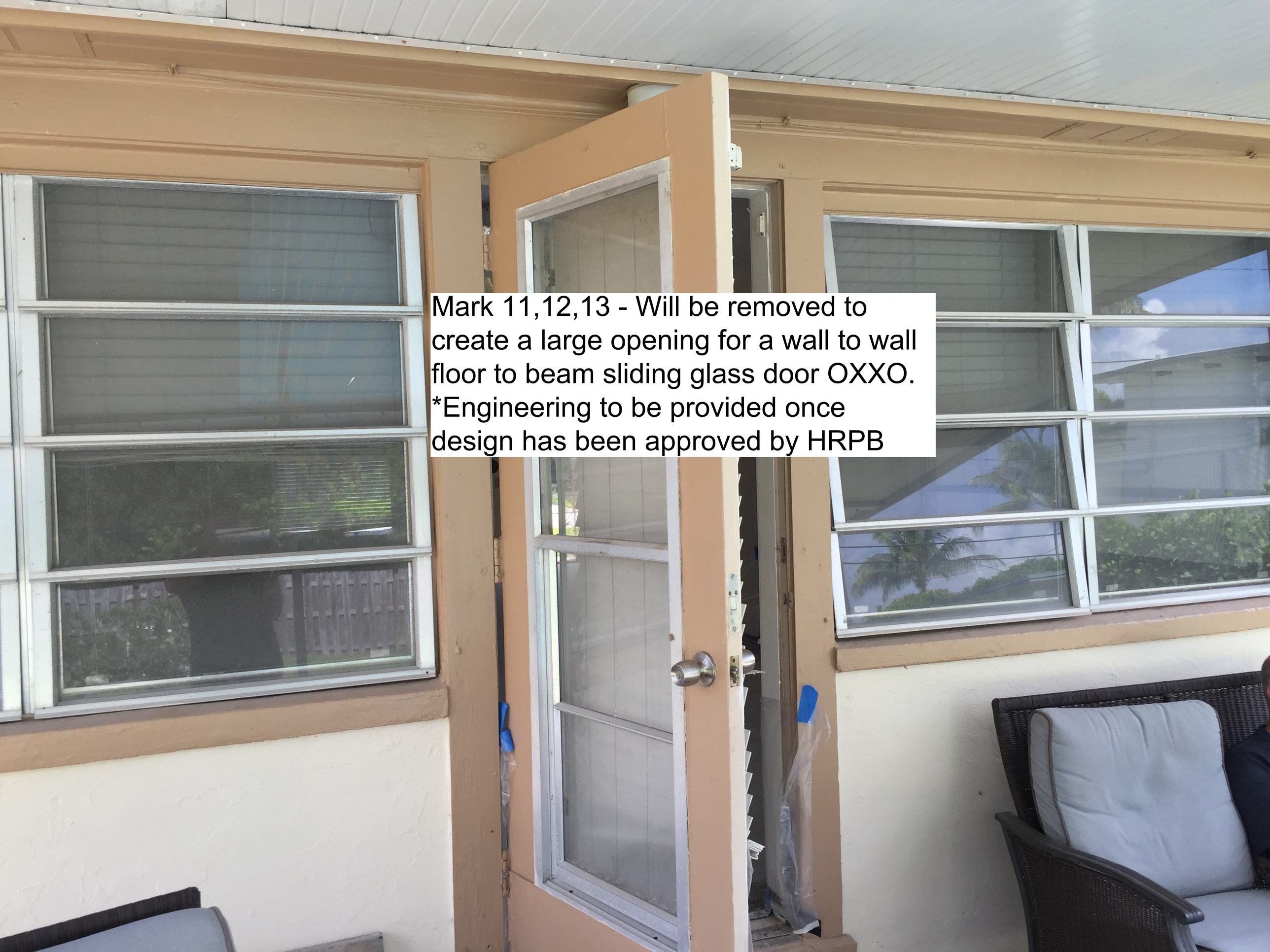
Mark 11,12,13 - Will be removed to create a large opening for a wall to wall floor to beam sliding glass door OXXO.
*Engineering to be provided once design has been approved by HRPB

MARK 11,12,13

Conversion to
Sliding Door

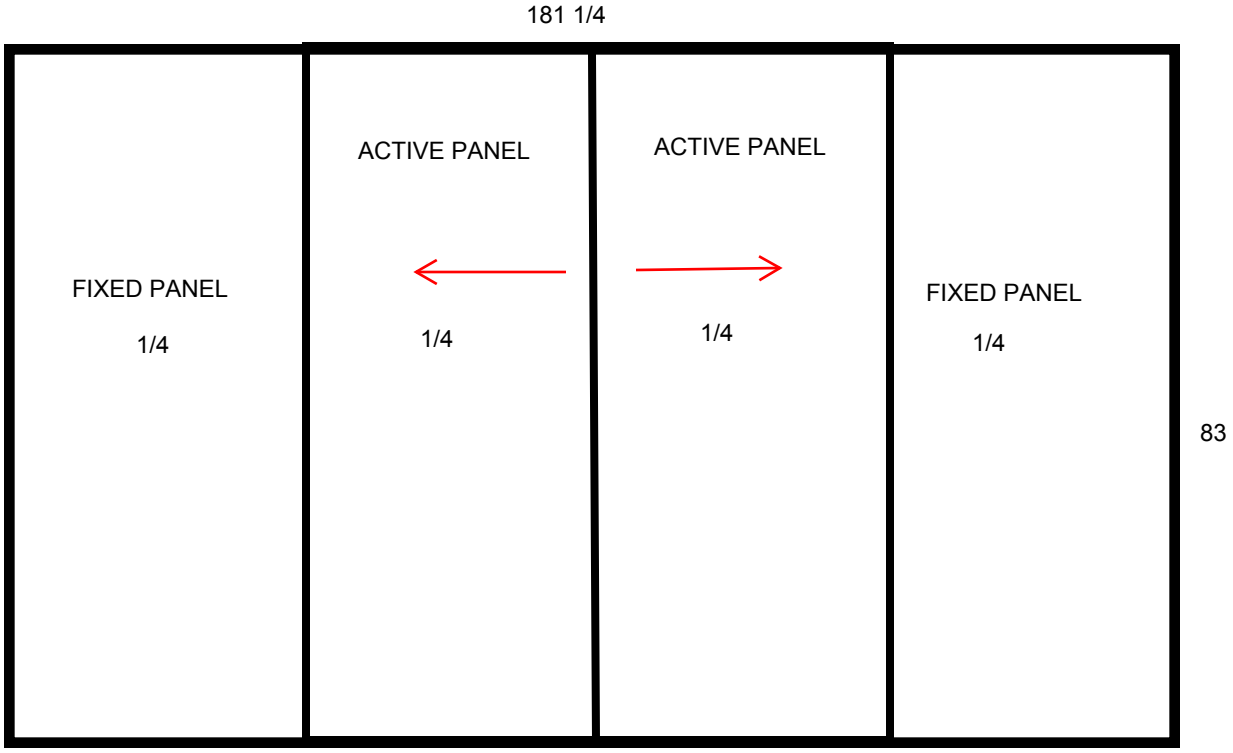

Mark 9 - New Single hung Window
Mark 10 - New 1/3 1/3 1/3 Horizontal roller same as mark 14 on opposite side of Florida room
Mark 11, 12, 13 - Removed to install OXXO Sliding Glass door floor to beam and wall to wall.

Mark 8 - New
Single hung
Window

A.O.Smith
ProMax
Secured by
ADT
Mark 7 - will remain a single hung window
Mark 6 - will remain a Single Hung Window

Mark 5 - New Casement Window with horizontal muttons
Mark 4 - New Casement window with horizontal muttons
Secured by
ADT
1-800-ADT-ASAP
www.adt.com

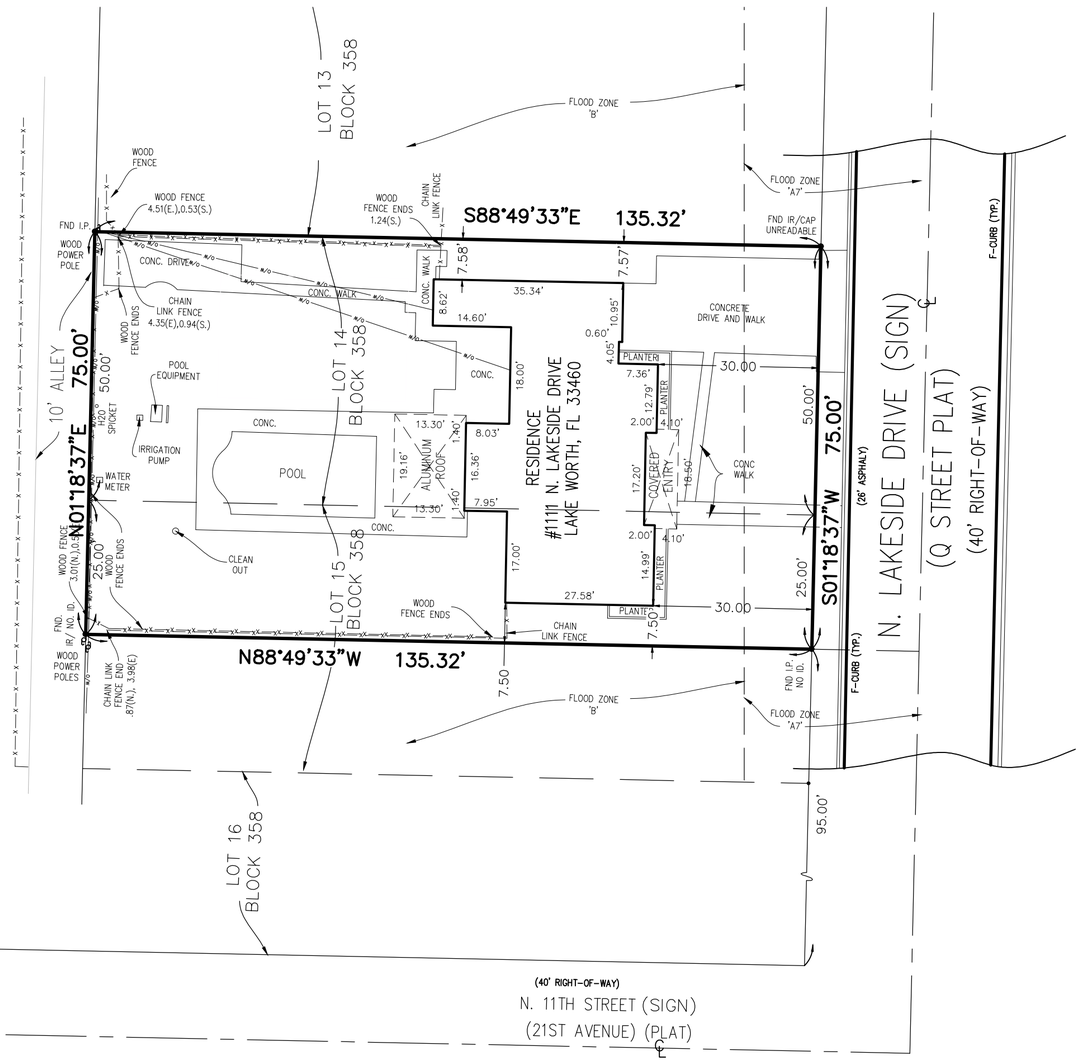

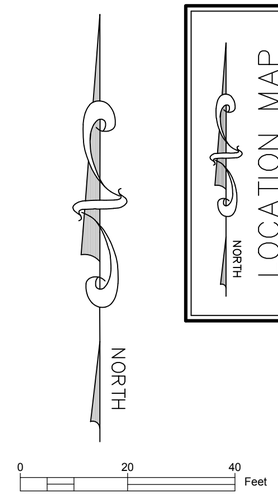

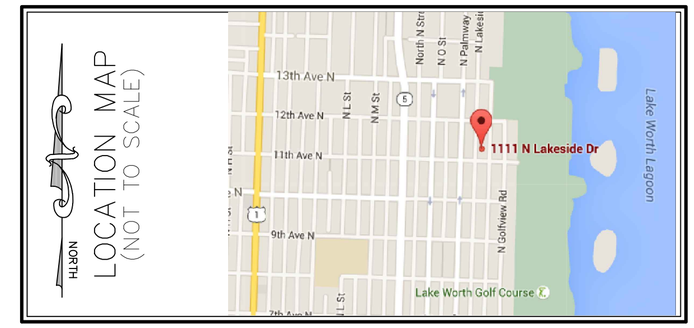

NOTES

1. REPRODUCTIONS OF THIS SKETCH ARE NOT VALID UNLESS SEALED WITH AN EMBOSSED SURVEYOR'S SEAL.
2. SURVEY MAP OR THE COPIES THEREOF ARE NOT VALID WITHOUT THE SIGNATURE AND THE ORIGINAL RAISED SEAL OF A FLORIDA LICENSED PROFESSIONAL LAND SURVEYOR.
3. LANDS SHOWN HEREON ARE NOT ABSTRACTED FOR RIGHTS-OF-WAY, EASEMENTS, OWNERSHIP, OR OTHER INSTRUMENTS OF RECORD.
4. **BEARINGS SHOWN HEREON ARE RELATIVE TO ASSUMED DATA.**
5. THE "DESCRIPTION" SHOWN HEREON IS IN ACCORD WITH THE DESCRIPTION PROVIDED BY THE CLIENT.
6. UNDERGROUND FOUNDATIONS WERE NOT LOCATED.
7. ADDITIONS OR DELETIONS TO SURVEY MAPS BY OTHER THAN THE SIGNING PARTY OR PARTIES IS PROHIBITED WITHOUT WRITTEN CONSENT OF THE SIGNING PARTY OR PARTIES.
8. **FLOOD ZONE: "B"AND "A7"(EL 7) COMMUNITY PANEL NO. 120213 0001 C; DATE: SEPTEMBER 30, 1982.**
9. THE PURPOSE OF THIS SURVEY IS TO DELINEATE HORIZONTAL AND VERTICAL LOCATIONS OF NEWLY CONSTRUCTED IMPROVEMENTS ONLY AND DOES NOT CONSTITUTE A BOUNDARY SURVEY AS SUCH.
10. ADDRESS: 1111 N. LAKESIDE DRIVE, LAKE WORTH, FLORIDA 33460-2309

DESCRIPTION

LOT 14, AND THE NORTH 25 FEET OF LOT 15, BLOCK 358, TOWNSITE OF LUCERNE, ACCORDING TO THE PALM BEACH FARMS COMPANY PLAT NO.2, RECORDED IN PLAT BOOK 2, PAGE 29 OF THE PUBLIC RECORDS OF PALM EACH COUNTY, FLORIDA.(THE TOWN OF LUCERNE IS NOW KNOWN AS LAKE WORTH).

SAID LANDS SITUATED IN THE CITY OF LAKE WORTH, PALM BEACH COUNTY, FLORIDA CONTAING 10,154 SQUARE FEET OR .2330 ACRES MORE OR LESS. SUBJECT TO EASEMENTS, RESTRICTIONS,RESERVATIONS, COVENANTS, AND RIGHTS-OF-WAY OF RECORD'

CERTIFICATE:

I HEREBY CERTIFY THAT THE ATTACHED BOUNDARY SURVEY OF THE HEREON DESCRIBED PROPERTY IS TRUE AND CORRECT TO THE BEST OF MY KNOWLEDGE AND BELIEF AS SURVEYED UNDER MY DIRECTION ON APRIL 11, 2016. I FURTHER CERTIFY THAT THIS BOUNDARY SURVEY MEETS THE MINIMUM STANDARDS OF PRACTICE SET FORTH IN CHAPTER 5J-17 ADOPTED BY THE FLORIDA BOARD OF PROFESSIONAL SURVEYORS AND MAPPERS, PURSUANT TO FLORIDA STATUTES 472.027.

JEFFREY R. WAGNER, PLS
REG. LAND SURVEYOR #5302
STATE OF FLORIDA - LB #3591

LEGEND

A/C - AIR CONDITIONER
L - ARC LENGTH
ALUM. - ALUMINUM
B.E. - BUFFER EASEMENT
C.O. - CLEANOUT
CLF - CHAIN LINK FENCE
CONC. - CONCRETE
COV. COVERED
D.E. - DRAINAGE EASEMENT
ELEC. - ELECTRIC
ELEV. - ELEVATION
EQUIP. - EQUIPMENT
ESMT. - EASEMENT
EXIST. - EXISTING
F.P.L.-FLORIDA POWER & LIGHT
FIN. - FINISHED
FLR. - FLOOR
FND. - FOUND

SQ. FT. - SQUARE FEET
TWP. - TOWNSHIP
TYP. - TYPICAL
U.E. - UTILITY EASEMENT
W.M. - WATER METER
W.E. - WATER EASEMENT
S.E. - SANITARY EASEMENT
- LIGHT POLE
- FIRE HYDRANT
- CATCH BASIN
- WATER VALVE
- SET 5/8" IR/CAP LB 3591
- SANITARY MANHOLE
- DRAINAGE MANHOLE

I.R./CAP - IRON ROD & CAP
INV. - INVERT
IRR. - IRRIGATION
L.A.E. - LIMITED ACCESS EASEMENT
O/S - BUILDING OFFSET
O.R.B. - OFFICIAL RECORD BOOK
P.B. - PLAT BOOK
P.B.C.R. - PALM BEACH COUNTY RECORD
P.O.B. - POINT OF BEGINNING
P.O.C.- POINT OF COMMENCEMENT
PGS - PAGE(S)
P.R.M.-PERMANENT REFERENCE MONUMENT
PROP. - PROPOSED
R - RADIUS
R/W - RIGHT-OF-WAY
RGE. - RANGE
SEC - SECTION
Δ - DELTA (CENTRAL ANGLE)
I.P. - IRON PIPE

- WOOD POWER POLE (UNLESS NOTED)
- CENTER LINE
- EXISTING ELEVATION
- TRAFFIC SIGN
OHW - ELECTRICAL WIRES OVERHEAD
- ANCHOR
- WATER METER
- RPZ
- GROUND LIGHT
- ELECTRIC HAND HOLE
- IRRIGATION CONTROL VALVE
NO I.D. - NO IDENTIFICATION

CAULFIELD & WHEELER, INC.
CIVIL ENGINEERING
LANDSCAPE ARCHITECTURE - SURVEYING
7900 GLADES ROAD - SUITE 100
BOCA RATON, FLORIDA 33434
PHONE (561)-392-1991 / FAX (561)-750-1452

TOWNSITE OF LUCERNE
LOT 14 AND A PORTION OF LOT 15 BLOCK 358

REVISIONS	DATE	BY

DATE	5-21-16	SCALE	1"=20'
FLD.BK.	DIGI	CHECKED BY	MAX
PAGE	1		
FILE NAME 7510 - DIXON RESIDENCE			

7510

SHT.NO. 1 OF 1 SHEETS

Owner Name: DIXON RONALD P

Parcel Control Number: 38-43-44-21-15-358-0140

Location Address: 1111 N LAKESIDE DR

Sketch for 38-43-44-21-15-358-0140

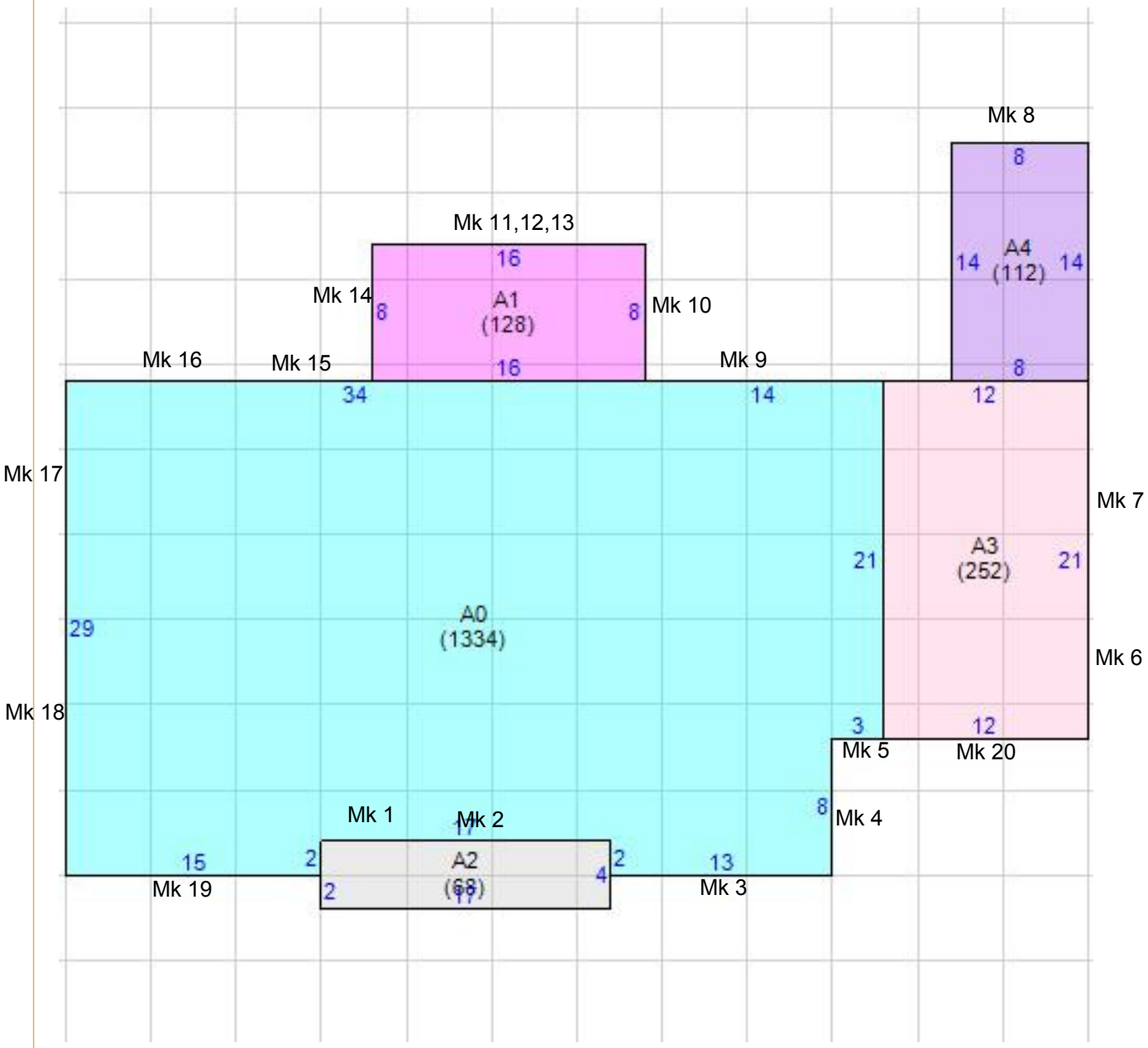

Product Approval Review Form

Address:- 1111 N. Lakeside Dr, Lake Worth, FL 33460
Contractor:- Titan II Construction Corporation Lot:- Block:-

#	Opening Location (Room Name)	Size		NOA Number	NOA Design Pressuure rating		Opening Required Pressure Rating		Egress Requirement		Shutter Requirement	
		Width	Height		(+) psf	(-) psf	(+) psf	(-) psf	Yes	No	Yes	No
1	Front Door	38 1/2	82	15 - 0603.13	70	75	36.1	39.3		No		No
2	Living Room	26	62 7/8	15 - 0406.10	70.0	75.0	37.8	41.0		No		No
2	Living Room	52	62 7/8	15 - 0406.11	70	75.0	36.1	39.3		No		No
2	Living Room	1 x 4 Mullion	62 7/8	16 - 0218.03	75.6	75.6	36.1	39.3		No		No
3	Bedroom 1	37	50 3/8	15 - 0406.10	70.0	75.0	37.8	41.0	Yes			No
3	Bedroom 1	1 x 4 Mullion	50 3/8	16 - 0218.03	170	170	37.8	41.0		N/A		No
4	Bedroom 1	37	50 3/8	15 - 0406.10	70.0	75.0	37.8	41.0	Yes			No
5	Master Bath	19	38 1/4	15 - 0406.10	70.0	75.0	37.8	41.0		No		No
6, 7	Garage	36 3/4	50 1/4	15 - 0406.12	75.0	90.0	37.8	41.0		No		No
8	Storage	37	38 3/8	15 - 0406.12	75.0	90.0	37.8	41.0		No		No
9	Kitchen	36 3/4	38 1/4	15 - 0406.12	75.0	90.0	37.8	41.0		No		No
10,14	Florida Room	85	53	15 - 0728.05	70	70	34.7	44.5		No		No

*** Highlight on NOA/PA the applicable detail, section, attachement and glass type.

Rev. 5/7/2009

Product Approval Review Form

Address:- 1111 N. Lakeside Dr, Lake Worth, FL 33460
Contractor:- Titan II Construction Corporation Lot:- Block:-

#	Opening Location (Room Name)	Size		NOA Number	NOA Design Pressuure rating		Opening Required Pressure Rating		Egress Requirement		Shutter Requirement	
		Width	Height		(+) psf	(-) psf	(+) psf	(-) psf	Yes	No	Yes	No
11 12 13	Florida Room	181 1/4	83	15 - 0612.05	70	80	33.8	42.7		No		No
15	Guest Bath	36 3/4	38 1/4	15 - 0406.12	75.0	90.0	37.8	41.0		No		No
16	Bedroom 2	36 3/4	50 1/8	15 - 0406.12	75.0	90.0	37.8	41.0	Yes			No
17	Bedroom 2	52 7/8	38 1/8	15 - 0406.12	75.0	90.0	37.8	41.0		No		No
18	Bedroom 3	53	38 1/8	15 - 0406.12	75.0	90.0	37.8	41.0		No		No
19	Bedroom 3	36 7/8	50 3/8	15 - 0406.10	70.0	75.0	37.8	41.0	Yes			No
19	Bedroom 3	36 7/8	50 3/8	15 - 0406.10	70.0	75.0	37.8	41.0	Yes			No
19	Bedroom 3	1 x 4 mullion	50 3/8	16 - 0218.03	75.6	75.6	37.8	41.0	N/A			
20	Garage	8'	7'	15 - 0505.02	57	67	33.8	42.7		No		
				-								
				-								
				-								

*** Highlight on NOA/PA the applicable detail, section, attachement and glass type.

Rev. 5/7/2009

5th ED. FLORIDA BUILDING CODE (2014) & ASCE 7-10 "ASD" DESIGN LOADS FOR COMPONENTS AND CLADDING

WIND VELOCITY = 170 MPH
EXPOSURE 'C'
ENCLOSED STRUCTURE, FLAT TERRAIN

MRH ≤ 60'
BASED ON Kd = 0.85

INTERIOR ZONE 4 PRESSURES

Mean Roof Height	DESIGN PRESSURES (PSF) - ZONE 4 Tributary Area (Sq Ft) 10	15	20	25	30	35	40	45	50
0 – 15 ft	-41.0 / +37.8	-40.0 / +36.8	-39.3 / +36.1	-38.7 / +35.5	-38.3 / +35.1	[illegible]	[illegible]	[illegible]	[illegible]
16 ft	-41.6 / +38.3	-40.5 / +37.3	-39.8 / +36.6	-39.3 / +36.0	-38.8 / +35.6	[illegible]	[illegible]	[illegible]	[illegible]
17 ft	-42.1 / +38.8	-41.1 / +37.8	-40.3 / +37.1	-39.8 / +36.5	-39.3 / +36.0	-38.9 / +35.6	[illegible]	[illegible]	[illegible]
18 ft	-42.6 / +39.3	-41.6 / +38.2	-40.8 / +37.5	-40.3 / +36.9	-39.8 / +36.5	-39.4 / +36.1	-39.1 / +35.7	-38.8 / +35.4	-38.5 / +35.2
19 ft	-43.1 / +39.7	-42.0 / +38.7	-41.3 / +37.9	-40.7 / +37.4	-40.3 / +36.9	-39.9 / +36.5	-39.5 / +36.1	-39.2 / +35.8	-38.9 / +35.6
20 ft	-43.6 / +40.2	-42.5 / +39.1	-41.7 / +38.3	-41.2 / +37.8	-40.7 / +37.3	-40.3 / +36.9	-39.9 / +36.5	-39.6 / +36.2	-39.4 / +36.0
21 ft	-44.0 / +40.6	-42.9 / +39.5	-42.2 / +38.7	-41.6 / +38.2	-41.1 / +37.7	-40.7 / +37.3	-40.4 / +36.9	-40.0 / +36.6	-39.8 / +36.3
22 ft	-44.4 / +41.0	-43.4 / +39.9	-42.6 / +39.1	-42.0 / +38.5	-41.5 / +38.0	-41.1 / +37.6	-40.7 / +37.3	-40.4 / +37.0	-40.2 / +36.7
23 ft	-44.9 / +41.4	-43.8 / +40.3	-43.0 / +39.5	-42.4 / +38.9	-41.9 / +38.4	-41.5 / +38.0	-41.1 / +37.6	-40.8 / +37.3	-40.5 / +37.0
24 ft	-45.3 / +41.7	-44.2 / +40.6	-43.4 / +39.8	-42.8 / +39.2	-42.3 / +38.7	-41.9 / +38.3	-41.5 / +38.0	-41.2 / +37.6	-40.9 / +37.4
25 ft	-45.7 / +42.1	-44.5 / +41.0	-43.8 / +40.2	-43.1 / +39.6	-42.6 / +39.1	-42.2 / +38.7	-41.9 / +38.3	-41.5 / +38.0	-41.3 / +37.7
26 ft	-46.0 / +42.4	-44.9 / +41.3	-44.1 / +40.5	-43.5 / +39.9	-43.0 / +39.4	-42.6 / +39.0	-42.2 / +38.6	-41.9 / +38.3	-41.6 / +38.0
27 ft	-46.4 / +42.8	-45.3 / +41.6	-44.5 / +40.8	-43.9 / +40.2	-43.3 / +39.7	-42.9 / +39.3	-42.5 / +38.9	-42.2 / +38.6	-41.9 / +38.3
28 ft	-46.8 / +43.1	-45.6 / +42.0	-44.8 / +41.2	-44.2 / +40.5	-43.7 / +40.0	-43.2 / +39.6	-42.9 / +39.2	[illegible]	[illegible]
29 ft	-47.1 / +43.4	-46.0 / +42.3	-45.1 / +41.5	-44.5 / +40.8	-44.0 / +40.3	[illegible]	[illegible]	[illegible]	[illegible]
30 ft	-47.4 / +43.7	-46.3 / +42.6	-45.5 / +41.8	-44.8 / +41.1	-44.3 / +40.6	[illegible]	[illegible]	[illegible]	[illegible]
32 ft	-48.1 / +44.3	-46.9 / +43.2	-46.1 / +42.3	-45.4 / +41.7	-44.9 / +41.2	-44.5 / +40.7	[illegible]	[illegible]	[illegible]
35 ft	-49.0 / +45.2	-47.8 / +44.0	-47.0 / +43.1	-46.3 / +42.5	-45.8 / +42.0	-45.3 / +41.5	-44.9 / +41.1	-44.5 / +40.8	-44.3 / +40.5
40 ft	-50.4 / +46.5	-49.2 / +45.2	-48.3 / +44.4	-47.6 / +43.7	-47.1 / +43.1	-46.6 / +42.7	-46.2 / +42.3	-45.9 / +41.9	-45.5 / +41.6
45 ft	-51.7 / +47.6	-50.4 / +46.4	-49.5 / +45.5	-48.8 / +44.8	-48.3 / +44.2	-47.8 / +43.8	-47.4 / +43.3	-47.0 / +43.0	-46.7 / +42.6
50 ft	-52.8 / +48.7	-51.5 / +47.4	-50.6 / +46.5	-49.9 / +45.8	-49.3 / +45.2	-48.9 / +44.7	-48.4 / +44.3	-48.1 / +43.9	-47.7 / +43.6
55 ft	-53.9 / +49.7	-52.6 / +48.4	-51.7 / +47.4	-50.9 / +46.7	-50.3 / +46.1	-49.9 / +45.6	-49.4 / +45.2	-49.0 / +44.8	-48.7 / +44.5
60 ft	-54.9 / +50.6	-53.6 / +49.3	-52.6 / +48.3	-51.9 / +47.6	-51.3 / +47.0	-50.8 / +46.5	-50.3 / +46.0	-49.9 / +45.7	-49.6 / +45.3

EXTERIOR ZONE 5 PRESSURES

Mean Roof Height	DESIGN PRESSURES (PSF) - ZONE 5 Tributary Area (Sq Ft) 10	15	20	25	30	35	40	45	50
0 – 15 ft	-50.6 / +37.8	-48.6 / +36.8	-47.2 / +36.1	-46.1 / +35.5	-45.2 / +35.1	-44.5 / +34.7	-43.8 / +34.4	-43.2 / +34.1	-42.7 / +33.8
16 ft	-51.3 / +38.3	-49.3 / +37.3	-47.8 / +36.6	-46.7 / +36.0	-45.8 / +35.6	-45.1 / +35.2	-44.4 / +34.9	-43.8 / +34.6	-43.3 / +34.3
17 ft	-52.0 / +38.8	-49.9 / +37.8	-48.5 / +37.1	-47.3 / +36.5	-46.4 / +36.0	-45.6 / +35.6	-45.0 / +35.3	-44.4 / +35.0	-43.8 / +34.7
18 ft	-52.6 / +39.3	-50.5 / +38.2	-49.0 / +37.5	-47.9 / +36.9	-47.0 / +36.5	-46.2 / +36.1	-45.5 / +35.7	-44.9 / +35.4	-44.4 / +35.2
19 ft	-53.2 / +39.7	-51.1 / +38.7	-49.6 / +37.9	-48.5 / +37.4	-47.5 / +36.9	-46.7 / +36.5	-46.0 / +36.1	-45.4 / +35.8	-44.9 / +35.6
20 ft	-53.8 / +40.2	-51.7 / +39.1	-50.1 / +38.3	-49.0 / +37.8	-48.0 / +37.3	-47.2 / +36.9	-46.5 / +36.5	-45.9 / +36.2	-45.4 / +36.0
21 ft	-54.3 / +40.6	-52.2 / +39.5	-50.7 / +38.7	-49.5 / +38.2	-48.5 / +37.7	-47.7 / +37.3	-47.0 / +36.9	-46.4 / +36.6	-45.8 / +36.3
22 ft	-54.9 / +41.0	-52.7 / +39.9	-51.2 / +39.1	[illegible]	[illegible]	[illegible]	[illegible]	[illegible]	-46.3 / +36.7
23 ft	-55.4 / +41.4	-53.2 / +40.3	-51.6 / +39.5	[illegible]	[illegible]	[illegible]	[illegible]	[illegible]	-46.7 / +37.0
24 ft	-55.9 / +41.7	-53.7 / +40.6	-52.1 / +39.8	-50.9 / +39.2	[illegible]	[illegible]	[illegible]	-47.7 / +37.6	-47.1 / +37.4
25 ft	-56.4 / +42.1	-54.1 / +41.0	-52.6 / +40.2	-51.3 / +39.6	-50.3 / +39.1	-49.5 / +38.7	-48.8 / +38.3	-48.1 / +38.0	-47.5 / +37.7
26 ft	-56.8 / +42.4	-54.6 / +41.3	-53.0 / +40.5	-51.8 / +39.9	-50.8 / +39.4	-49.9 / +39.0	-49.2 / +38.6	-48.5 / +38.3	-47.9 / +38.0
27 ft	-57.3 / +42.8	-55.0 / +41.6	-53.4 / +40.8	-52.2 / +40.2	-51.2 / +39.7	-50.3 / +39.3	-49.6 / +38.9	-48.9 / +38.6	-48.3 / +38.3
28 ft	-57.7 / +43.1	-55.4 / +42.0	-53.8 / +41.2	-52.6 / +40.5	-51.6 / +40.0	-50.7 / +39.6	-49.9 / +39.2	-49.3 / +38.9	-48.7 / +38.6
29 ft	-58.1 / +43.4	-55.9 / +42.3	-54.2 / +41.5	-53.0 / +40.8	-51.9 / +40.3	-51.1 / +39.9	-50.3 / +39.5	-49.7 / +39.2	-49.1 / +38.9
30 ft	-58.6 / +43.7	-56.3 / +42.6	-54.6 / +41.8	-53.3 / +41.1	-52.3 / +40.6	-51.4 / +40.2	-50.7 / +39.8	-50.0 / +39.5	-49.4 / +39.2
32 ft	-59.4 / +44.3	-57.0 / +43.2	-55.4 / +42.3	-54.1 / +41.7	-53.0 / +41.2	-52.1 / +40.7	-51.4 / +40.3	-50.7 / +40.0	-50.1 / +39.7
35 ft	-60.5 / +45.2	-58.1 / +44.0	-56.4 / +43.1	-55.1 / +42.5	-54.0 / +42.0	-53.1 / +41.5	-52.3 / +41.1	-51.7 / +40.8	-51.0 / +40.5
40 ft	-62.2 / +46.5	-59.8 / +45.2	-58.0 / +44.4	-56.7 / +43.7	-55.6 / +43.1	-54.6 / +42.7	-53.8 / +42.3	-53.1 / +41.9	-52.5 / +41.6
45 ft	-63.8 / +47.6	-61.3 / +46.4	-59.5 / +45.5	-58.1 / +44.8	-57.0 / +44.2	-56.0 / +43.8	-55.2 / +43.3	-54.5 / +43.0	-53.8 / +42.6
50 ft	-65.2 / +48.7	-62.6 / +47.4	-60.8 / +46.5	-59.4 / +45.8	-58.3 / +45.2	-57.3 / +44.7	-56.4 / +44.3	-55.7 / +43.9	-55.0 / +43.6
55 ft	-66.5 / +49.7	-63.9 / +48.4	-62.1 / +47.4	-60.6 / +46.7	-59.4 / +46.1	-58.4 / +45.6	-57.6 / +45.2	-56.8 / +44.8	-56.1 / +44.5
60 ft	-67.8 / +50.6	-65.1 / +49.3	-63.2 / +48.3	-61.7 / +47.6	-60.5 / +47.0	-59.5 / +46.5	-58.6 / +46.0	-57.9 / +45.7	-57.2 / +45.3

INSTRUCTIONS FOR TABLE USE:

1. TABLES ARE INTENDED TO DEPICT THE 'WORST CASE' PRESSURES. 'WORST CASE' IS DEFINED AS THE CRITICAL CONDITION [illegible] ANY UNKNOWN VARIABLE AS DESCRIBED BELOW. USE OF CRITICAL CONDITIONS REQUIRES [illegible] WITH THESE TABLES.
2. TABLES VALID ON [illegible] ROOF HEIGHT AS LIMITED ABOVE.
3. TABLES VALID FOR [illegible] APPLICABLE REDUCTIONS FOR ROOF SLOPES LESS THAN 10° SHALL [illegible] ENGINEER AS A SITE SPECIFIC CONDITION.
4. IDENTIFY THE BUILDING [illegible] ROOF HEIGHT. IF THE MEAN ROOF HEIGHT CANNOT BE IDENTIFIED, USE [illegible] HEIGHT.
5. ALWAYS ROUND [illegible] TABLE VALUE OR CONSERVATIVE ASSUMPTION.
6. CALCULATE THE TRIBUTARY AREA OF THE OPENING IN QUESTION (HEIGHT * WIDTH) OR THE SPAN LENGTH (HEIGHT) MULTIPLIED BY AN EFFECTIVE WIDTH THAT NEED NOT BE LESS THAN ONE-THIRD THE SPAN LENGTH (HEIGHT² / 3). USE THE AREA BETWEEN STRUCTURAL OPENINGS ONLY- THIS INCLUDES AREAS BETWEEN STRUCTURAL MULLS. IF THE TRIBUTARY AREA OF AN OPENING CANNOT BE IDENTIFIED, THE MOST CRITICAL (10 SQUARE FEET) SHALL BE USED. ALWAYS ROUND TRIBUTARY AREA DOWN TO THE LESSER TABLE VALUE. FOR LARGER TRIBUTARY AREAS THAN PUBLISHED, USE THE LARGEST PUBLISHED VALUE.
7. IDENTIFY THE ZONE OF THE OPENING AS INTERIOR (ZONE 4) OR EXTERIOR (ZONE 5) PER THE FIGURE OR INFORMATION BY OTHERS. ANY QUESTIONABLE OPENING IS TO BE CONSIDERED THE MORE CRITICAL (EXTERIOR) ZONE.
8. READ OFF POSITIVE AND NEGATIVE PRESSURES FOR USE AS REQUIRED BY THE LOCAL MUNICIPALITY IN ACCORDANCE WITH CODE.
9. FOR SITUATIONS THAT REQUIRE Kd=1.0, TABLE VALUES ARE UNDER-DESIGNED BY A FACTOR OF 1.18. VERIFY Kd REQUIREMENTS WITH LOCAL MUNICIPALITY PRIOR TO TABLE USE.

GENERAL NOTES:

1. TABLES ARE TO BE USED IN CONFORMANCE WITH "ALLOWABLE STRESS DESIGN METHODOLOGY" PER ASCE 7-10 SECTION 2.4.1 AND CHAPTER 30 PART 1 OR 3, USING THE CRITERIA AS OUTLINED HEREIN.
2. DESIGN IS BASED ON THE 3 SECOND GUST (WIND VELOCITY) FOR THE WIND SPEED AND EXPOSURE SPECIFIED. THESE TABLES NOT FOR USE WITH ESSENTIAL FACILITIES OR ASSEMBLY OCCUPANCIES. TOPOGRAPHIC FACTOR Kzt=1.0 FOR FLAT TERRAIN USE ONLY. THESE TABLES NOT VALID FOR HILLY TERRAIN. INTERNAL PRESSURE COEFFICIENT (GCpi=+/-0.18) FOR USE WITH AN ENCLOSED STRUCTURE ONLY. VERIFY USE OF Kd (DIRECTIONALITY FACTOR) WITH LOCAL BUILDING DEPARTMENT. HVHZ = HIGH VELOCITY HURRICANE ZONE. TABLES ARE FOR WALLS AND VERTICAL SURFACES ONLY.
3. THESE CHARTS ARE NOT VALID AS A SITE-SPECIFIC DRAWING. THESE TABLES ARE ONLY VALID WHEN SIGNED & RAISED SEALED BY FRANK L. BENNARDO, P.E.
4. THIS SPECIFICATION IS INTENDED TO ILLUSTRATE DESIGN WIND PRESSURES AS LISTED. USE OF THESE TABLES AND CORRESPONDING WIND VELOCITY, EXPOSURE, AND OTHER COEFFICIENTS LISTED HEREIN [illegible] DICTATED AND VERIFIED BY THE GOVERNING BUILDING DEPARTMENT AND PERMITTING [illegible] WARRANTY FOR APPLICABILITY OF TABLE VALUE USE IS OFFERED HEREIN. [illegible] OFFER ANY PRODUCT APPROVED
5. THIS SPECIFICATION IS [illegible] SUBMITTED TEST CRITERIA AND OTHER CERTIFICATION. REFER TO ANY SUBMITTED TEST CRITERIA AND OTHER INFORMATION AND APPLICABILITY OF THESE TABLE APPROVALS FOR DESIGN [illegible] IN ACCORDANCE WITH GOVERNING CODES. VALUES WHICH IS TO BE VERIFIED [illegible] SYSTEM ORDINANCES.
6. ADHERE TO ALL LOCAL IMPACT [illegible] INTEGRITY OF THE HOST STRUCTURE.
7. NO CERTIFICATION IS OFFERED FOR [illegible]
8. EXCEPT AS EXPRESSLY PROVIDED HEREIN, NO ADDITIONAL CERTIFICATIONS OR AFFIRMATIONS ARE INTENDED.

a= 10% OF LEAST HORIZONTAL DIMENSION OR 40% OF MRH, WHICHEVER IS SMALLER, BUT NOT LESS THAN 4% OF LEAST HORIZONTAL DIMENSION OR 3FT (1m). USE ZONE 5 IF AT ALL IN QUESTION. CONSULT AN ENGINEER FOR A MORE SPECIFIC INTERPRETATION IF REQUIRED.

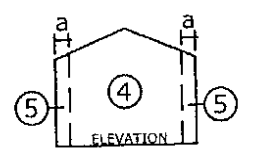

WALL ZONE FIGURES

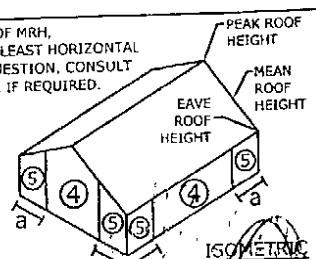

ISOMETRIC

REMARKS	DRWN	CHKD	DATE
INIT ISSUE	GSS	TSB	03/05/12
REV - ADJUSTED HEIGHTS	GSS	TSB	04/09/12
REV 2014 FBC	DGM	TSB	06/10/15
-	-	-	-
-	-	-	-

THIS DOCUMENT IS THE PROPERTY OF ENGINEERING EXPRESS, AND SHALL NOT BE REPRODUCED IN WHOLE ORPART WITHOUT WRITTEN CONSENT OF ENGINEERING EXPRESS.ALTERATIONS, ADDITIONS, OR OTHER MARKINGS TO THIS DOCIMENT ARE NOT PERMITTED AND INVALIDATE OUR CERTIFICATION.

COPYRIGHT ENGINEERING EXPRESS©

SCALE: N.T.S.

00-MPS14-413

1 OF 1

5TH ED. FLORIDA BUILDING CODE (2014)

ASCE 7-10, CHAPTER 30
DESIGN LOADS FOR COMPONENTS & CLADDING
MASTER PLAN SHEET

ASCE 7-10

ENGINEERING EXPRESS®
CORPORATE OFFICE:
160 SW 12th AVENUE, SUITE 106
DEERFIELD BEACH, FL 33442
P: (954) 354-0660 F: (954) 354-0443
CERT OF AUTH #9885
E: HELLO@ENGINEERINGEXPRESS.COM
ENGINEERINGEXPRESS.COM

VALID FOR ONE (1) PERMIT ONLY
VALID ONLY WITH RAISED ENGINEER SEAL

06/30/2015

FRANK L. BENNARDO, P.E.
PE0046549

ENTREMATIC

Amarr® Oak Summit®

Classic Steel Carriage House Garage Doors

Long Bead Board design with Moonlite DecraTrim in True White with Blue Ridge handles and hinges

Self-expression shouldn't cost a fortune. With the Amarr Oak Summit collection, it won't. These durable steel doors offer an attractive carriage house look. Choose from a variety of door colors, decorative hardware, and window accents. Customize your home with our most affordable carriage house door.

Bead Board design with Mission DecraGlass in Golden Oak

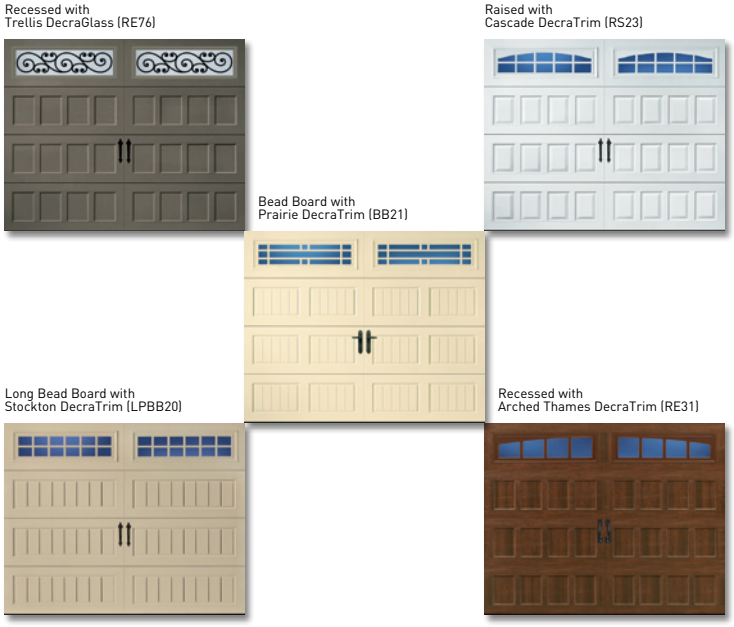

PANEL DESIGNS

BB • BEAD BOARD

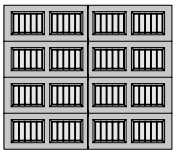

LPBB • LONG BEAD BOARD

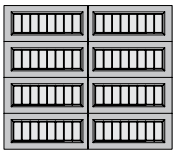

RE • RECESSED

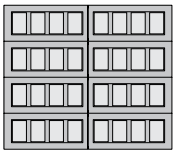

RS • RAISED

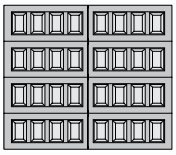

www.amarr.com

Amarr® Oak Summit®

Construction

STEEL

OS1000

Single-Layer: Steel

Get value and durability with the Amarr Oak Summit OS1000 single-layer steel door. These heavy-duty steel doors are durable, reliable, and low maintenance.

- Heavy-duty Exterior Steel
- Durable, Reliable, Low Maintenance

OS2000

Double-Layer: Steel + Insulation

The Amarr Oak Summit OS2000 double-layer door provides durable, low-maintenance features, plus a layer of vinyl-coated insulation for increased thermal properties and quieter operation.

- Heavy-duty Exterior Steel
- Durable, Reliable, Low Maintenance
- Environmentally Safe Polystyrene Thermal Insulation with Vinyl Backing
- Energy Efficient
- Quiet Operation

OS3000

Triple-Layer: Steel + Insulation + Steel

For the toughest, most energy-efficient steel door, the Amarr Oak Summit OS3000 triple-layer door includes the ultimate in thermal properties, plus a layer of steel for a finished interior look and added durability.

- Heavy-duty Exterior and Interior Steel
- Durable, Reliable, Low Maintenance
- Environmentally Safe Polystyrene Thermal Insulation
- Superior Energy Efficiency
- Extra Quiet Operation

Specifications

Amarr ENTREMATIC	AMARR OAK SUMMIT OS1000	AMARR OAK SUMMIT OS2000	AMARR OAK SUMMIT OS3000
PANEL DESIGNS			
Bead Board	•	•	•
Long Panel Bead Board	•	•	•
Recessed	•	•	•
Raised	•	•	•
INSULATION[1]		Polystyrene	Polystyrene
R-VALUE[2]		6.64	6.48
DOOR THICKNESS	2" (5.1cm)	2" (5.1cm)	1-3/8" (3.4cm)
STEEL THICKNESS	25 ga	25 ga	27/27 ga
WINDOW GLASS OPTIONS			
3/32" Single Strength	•	•	•
Insulated Glass			•
Obscure	•	•	•
WIND LOAD[3] AVAILABLE	•	•	•
PAINT FINISH WARRANTY[4]	15 Years	25 Years	Lifetime
WORKMANSHIP/HARDWARE WARRANTY[4]	1 Year	2 Years	3 Years

[1] Insulation on Amarr brand doors has passed self-ignition, flamespread and smoke developed index fire testing.

[2] Calculated door section R-value is in accordance with DASMA TDS-163.

[3] It is your responsibility to make sure your garage door meets local building codes.

[4] For complete warranty details, visit amarr.com or contact your local Amarr dealer.

Technical data subject to change without notice.

Sectional door products from Entrematic may be the subject of one or more U.S. and/or foreign, issued and/or pending, design and/or utility patents.

Entrematic and Amarr as words and logos are registered trademarks owned by Entrematic Group AB or companies within the Entrematic Group.

©Entrematic Group AB 2016. All rights reserved.

Printed in USA Form #6040416/75M/GVS

DecraTrim Window Inserts

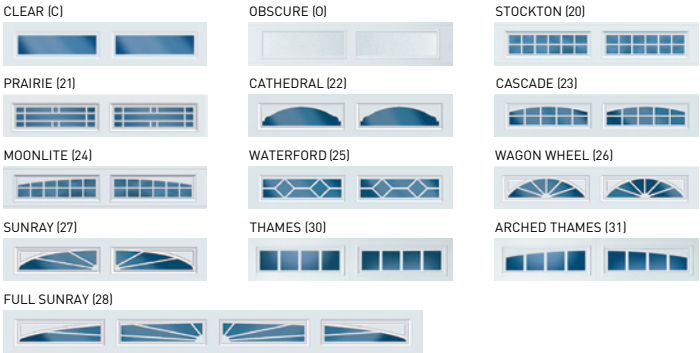

DecraGlass™ Windows

Tempered obscure glass with baked-on ceramic designs.

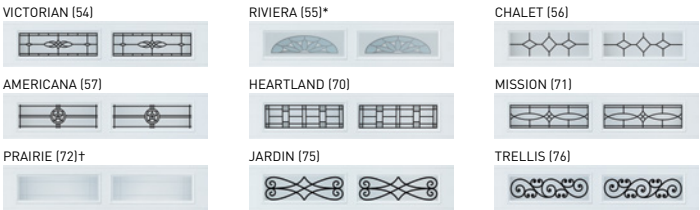

* Clear glass with printed frost pattern.
† Obscure glass with v-groove.

Colors

Amarr steel doors are pre-painted; for custom colors, exterior latex paint must be used.
Visit amarr.com for instructions on painting. Actual paint colors may vary from samples shown.

‡Color only available in Amarr Oak Summit OS3000.
**Price upcharge applies.

Decorative Hardware

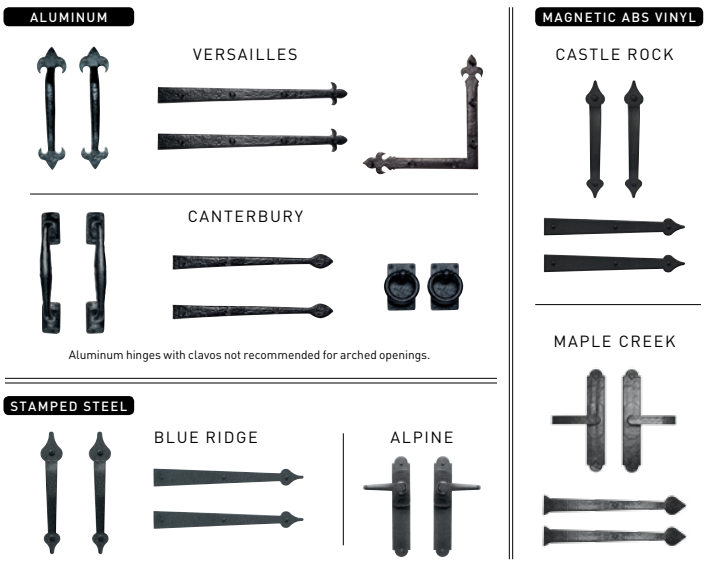

ENTREMATIC

Entrematic
165 Carriage Court
Winston-Salem, NC 27105
800.503.DOOR
www.amarr.com

RECYCLED STEEL

MADE IN USA

YOUR LOCAL AMARR DEALER:

MIAMI-DADE COUNTY
PRODUCT CONTROL SECTION
11805 SW 26 Street, Room 208
Miami, Florida 33175-2474
T (786) 315-2590 F (786) 315-2599
www.miamidade.gov/economy

DEPARTMENT OF REGULATORY AND ECONOMIC RESOURCES (RER)
BOARD AND CODE ADMINISTRATION DIVISION

NOTICE OF ACCEPTANCE (NOA)

Amarr Garage Doors
165 Carriage Court
Winston-Salem, NC 27105

SCOPE: This NOA is being issued under the applicable rules and regulations governing the use of construction materials. The documentation submitted has been reviewed and accepted by Miami-Dade County RER-Product Control Section to be used in Miami Dade County and other areas where allowed by the Authority Having Jurisdiction (AHJ). This NOA shall not be valid after the expiration date stated below. The Miami-Dade County Product Control Section (In Miami Dade County) and/or the AHJ (in areas other than Miami Dade County) reserve the right to have this product or material tested for quality assurance purposes. If this product or material fails to perform in the accepted manner, the manufacturer will incur the expense of such testing and the AHJ may immediately revoke, modify, or suspend the use of such product or material within their jurisdiction. RER reserves the right to revoke this acceptance, if it is determined by Miami-Dade County Product Control Section that this product or material fails to meet the requirements of the applicable building code.
This product is approved as described herein, and has been designed to comply with the Florida Building Code, including the High Velocity Hurricane Zone.

DESCRIPTION: Model 950 Heritage & 655 Oak Summit 1000, 2000 Steel Sectional Garage Door up to 9'-0" Wide

APPROVAL DOCUMENT: Drawing No. **IRC-9509-189-21-I**, titled "Model 950 Heritage and Model 655 Oak Summit (24ga) 1000, 2000 Short, Long, Flush and Oak Summit Panels", sheets 1 through 3 of 3, dated 04/09/2007, with revision C dated 12/05/2011, prepared by Amarr Garage Doors, signed and sealed by Thomas L. Shelmerdine, P.E., bearing the Miami-Dade County Product Control revision stamp with the Notice of Acceptance number and expiration date by the Miami-Dade County Product Control Section.

MISSILE IMPACT RATING: Large and Small Missile Impact Resistant

LABELING: A permanent label with the manufacturer's name or logo, 3800 Greenway Circle, Lawrence, Kansas, model number, the positive and negative design pressure rating, indicate impact rated if applicable, installation instruction drawing reference number, approval number (NOA), the applicable test standards, and the statement reading 'Miami-Dade County Product Control Approved' is to be located on the door's side track, bottom angle, or inner surface of a panel.

RENEWAL of this NOA shall be considered after a renewal application has been filed and there has been no change in the applicable building code negatively affecting the performance of this product.

TERMINATION of this NOA will occur after the expiration date or if there has been a revision or change in the materials, use, and/or manufacture of the product or process. Misuse of this NOA as an endorsement of any product, for sales, advertising or any other purposes shall automatically terminate this NOA. Failure to comply with any section of this NOA shall be cause for termination and removal of NOA.

ADVERTISEMENT: The NOA number preceded by the words Miami-Dade County, Florida, and followed by the expiration date may be displayed in advertising literature. If any portion of the NOA is displayed, then it shall be done in its entirety.

INSPECTION: A copy of this entire NOA shall be provided to the user by the manufacturer or its distributors and shall be available for inspection at the job site at the request of the Building Official.
This NOA **revises NOA # 12-0228.01** and consists of this page 1 and evidence page E-1, as well as approval document mentioned above.
The submitted documentation was reviewed by **Carlos M. Utrera, P.E.**

MIAMI-DADE COUNTY APPROVED

07/06/2015

NOA No. 15-0505.02
Expiration Date: September 6, 2017
Approval Date: July 16, 2015

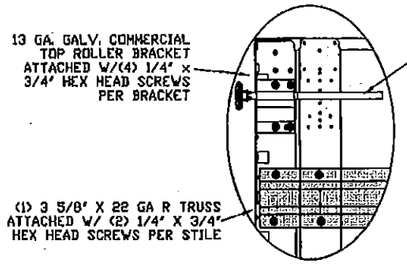

TYPICAL TOP FIXTURES (1)
N.T.S.

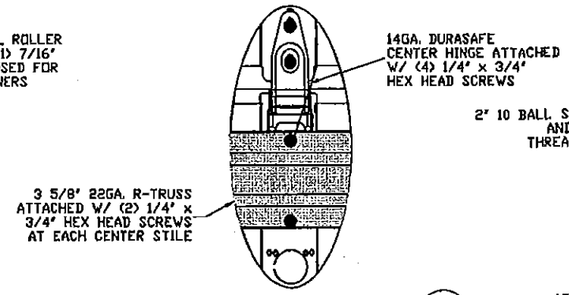

TYPICAL DURASAFE CENTER HINGE (2)
N.T.S.

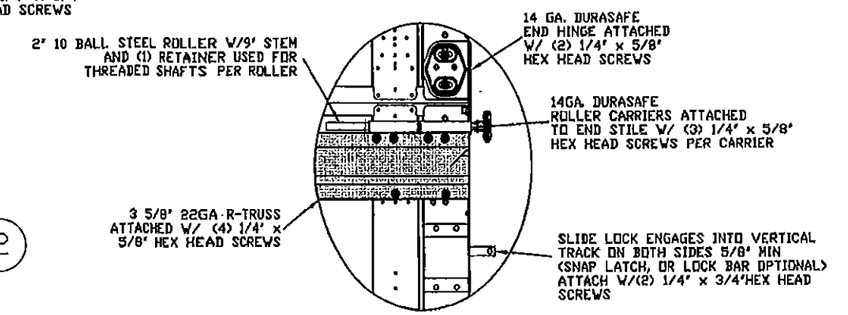

TYPICAL DURASAFE END HINGE (3)
N.T.S.

PRODUCT REVISED
as complying with the Florida Building Code
Acceptance No 15-0505.02
Expiration Date 09/06/2017
By
Miami Dade Product Control

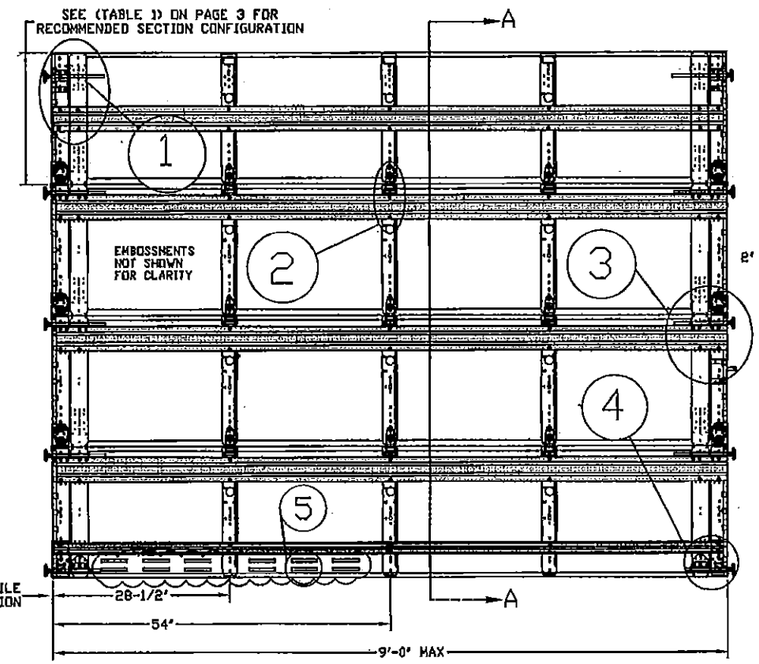

INSIDE ELEVATION
N.T.S.

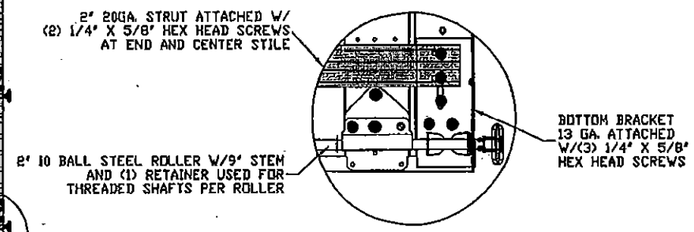

TYPICAL BOTTOM BRACKET (4)
N.T.S.

PRODUCT REVISED
as complying with the Florida Building Code
Acceptance No 12-0228.01
Expiration Date 09/06/2017
By
Miami Dade Product Control

LARGE MISSILE IMPACT RESISTANT

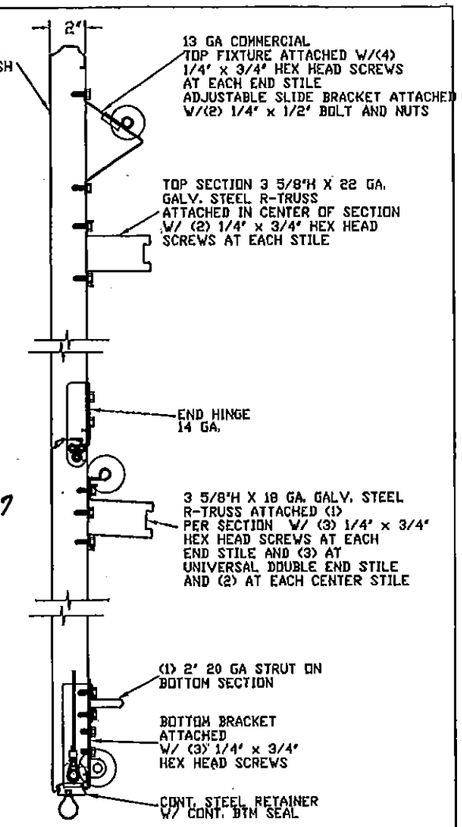

SECTION A-A (SIDE VIEW)
N.T.S.

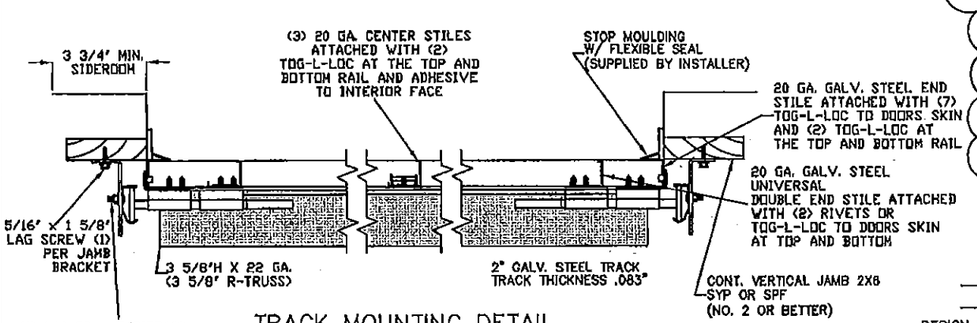

TRACK MOUNTING DETAIL
N.T.S.

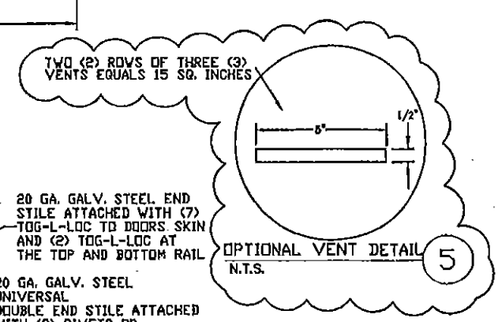

OPTIONAL VENT DETAIL (5)
N.T.S.

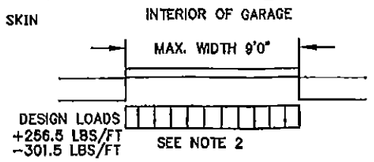

SPECIFICATIONS AND NOTES

1. ALL THE LOAD FROM THE DOOR IS TRANSFERRED TO THE VERTICAL TRACK, FROM THE TRACK THE LOAD IS TRANSFERRED TO THE VERTICAL JAMBS. THE HORIZONTAL JAMB OR HEADER RECEIVES NO PORTION OF THE LOAD TRANSFERRED FROM THE DOOR.
2. EACH VERTICAL JAMBS RECEIVES MAXIMUM DESIGN LOADS OF: +256.5 LBS/FT & -301.5 LBS/FT
3. DOOR AND HARDWARE WILL BE DESIGNED, MANUFACTURED AND INSTALLED WITH STANDARDS AS SET FORTH BY DASMA.
4. DOOR SECTIONS SHALL BE 24 GA. (.0216) MIN. EXTERIOR SKIN ROLLED FORMED, W/ BAKED ON POLYESTER FINISH
5. DOORS UPTO 7'0" HIGH CONSIST OF (4) SECTIONS AS SHOWN. USE (1) 3 5/8" R-TRUSS PER SECTION AND (1) 2" 20 GA STRUT ON THE BOTTOM SECTION
6. DOORS OVER (4) SECTIONS REFER TO TABLES 1 AND 2 ON PAGE 3
7. SUPPORTING STRUCTURAL ELEMENTS SHALL BE DESIGNED BY A REGISTRED PROFESSIONAL ENGINEER FOR WIND LOADS INDICATED ON THIS DRAWING IN ADDITION TO OTHER LOADINGS.
8. THIS APPROVAL REQUIRES THE MANUFACTURER TO DO TESTING OF ALL COILS USED TO FABRICATE DOOR PANELS UNDER THIS NOTICE OF ACCEPTANCE. A MINIMUM OF 2 SPECIMENS SHALL BE CUT FROM EACH COIL AND TENSILE TESTED ACCORDING TO ASTM E-8 BY A DADE COUNTY APPROVED LAB SELECTED AND PAID BY THE MANUFACTURER. EVERY 3 MONTHS, 4 TIMES A YEAR, THE MANUFACTURER SHALL MAIL TO THIS OFFICE: A COPY OF THE TEST REPORTS WITH CONFIRMATION THAT THE SPECIMENS WERE SELECTED FROM COILS AT THE MANUFACTURER PRODUCTION FACILITIES. AND A NOTARIZED STATEMENT FROM THE MANUFACTURER THAT ONLY COILS WITH YIELD STRENGTH OF 34,600 PSI OR MORE SHALL BE USED TO MAKE DOOR PANELS FOR DADE COUNTY UNDER THIS NOTICE OF ACCEPTANCE.

REV	DESCRIPTION OF REVISIONS	DATE	BY
A	ADDED TITLE BLOCK TO PAGE 2	7/3/07	BHG
B	REVISED NOTE 8	12/15/08	CBT
C	UPDATED TO FBC 2010	12/5/11	RLR

MAX SIZE
9' x 14'
DESIGN LOADS
+57.0 PSF
-67.0 PSF
LARGE MISSILE IMPACT RESISTANCE

THOMAS L. SHELMERDINE
LICENSE
No 0048579
STATE OF FLORIDA
PROFESSIONAL ENGINEER

Amarr
165 CARRIAGE COURT WINSTON-SALEM, N.C. 27105 WWW.AMARR.COM

MODEL 950 HERITAGE 1000, 2000
MODEL 655 OAK SUMMIT (24g) 1000, 2000
SHORT, LONG, FLUSH, & OAK SUMMIT PANELS

SIZE	DRAWN BY	SKW	DATE	04/9/07	DRAWING NUMBER
B	CHECKED BY	BHG	DATE	04/9/07	IRC-9509-189-21-1

ENGINEER: THOMAS L. SHELMERDINE P.E. LIC. No. 0048579 | SHEET 1 OF 3

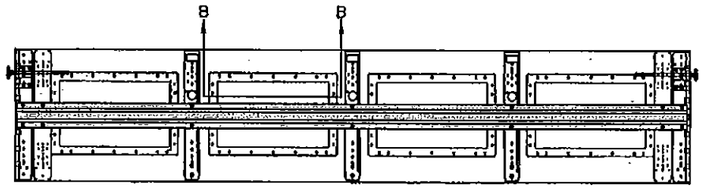

TOP SECTION

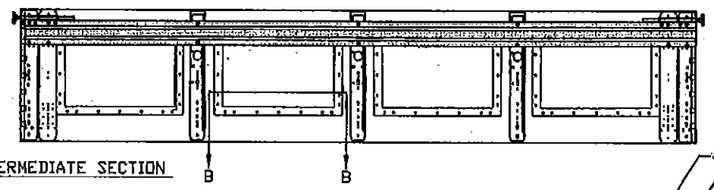

INTERMEDIATE SECTION

GLAZING OPTION DETAIL
N.T.S.
GLAZING MEETS ASTM E1300-04

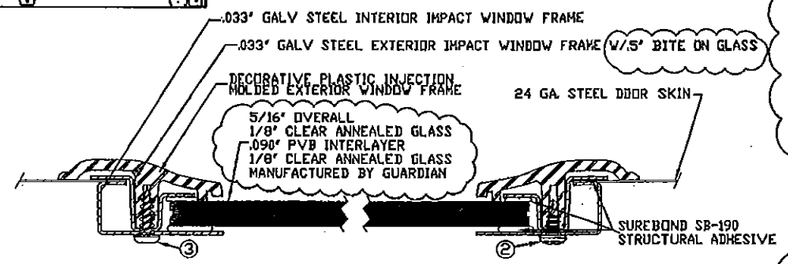

2. 3/16" X 1/2" SCREW - USED TO FASTEN THE STEEL EXTERIOR IMPACT WINDOW FRAME TO THE STEEL INTERIOR IMPACT WINDOW FRAME.
3. 11/64" X 1/2" SCREW - USED TO FASTEN DECORATIVE PLASTIC MOLDED WINDOW FRAME TO THE ASSEMBLY

SECTION B-B IMPACT WINDOW DETAIL
N.T.S.

WOOD JAMB ATTACHMENT TO STRUCTURE

2 X 6 VERTICAL JAMB ATTACHMENT TO WOOD FRAME STRUCTURE
5/16" X 3" LAG SCREWS STARTING 6" FROM ENDS THEN 18" O.C. (1 1/2" EMBEDMENT)

2 X 6 VERTICAL JAMB ATTACHMENT TO 2,000 PSI CONCRETE
HILTI KWIK BOLT 3/8" X 4" STARTING 6" FROM ENDS THEN 24" O.C. (2 1/2" EMBEDMENT)
HILTI SLEEVE ANCHOR 3/8" X 2-3/4" STARTING 6" FROM ENDS THEN 16" O.C. (1 1/4" EMBEDMENT)
ITW/RAMSET REDHEAD (TRU-BOLT) 3/8" X 4" STARTING 6" FROM ENDS THEN 24" O.C. (2 1/2" EMBEDMENT)

2 X 6 VERTICAL JAMB ATTACHMENT TO HOLLOW C-90 BLOCK
SIMPSON 1/4" X 3" TITEN SCREWS STARTING 6" FROM ENDS, USE PAIRS OF FASTENERS (3" APART) AT 8" O.C. (1 1/2" EMBEDMENT)
HILTI 1/4" X 2-3/4" KWIK-CON II+ SCREWS STARTING 6" FROM ENDS, USE PAIRS OF FASTENERS (3" APART) AT 8" O.C. (1 1/4" EMBEDMENT)

2 X 6 VERTICAL JAMB ATTACHMENT TO GROUTED C-90 BLOCK (2000 PSI GROUT)
HILTI SLEEVE ANCHOR 3/8" X 2-3/4" STARTING 6" FROM ENDS THEN 20" O.C. (1 1/4" EMBEDMENT) (OR, USE FASTENERS FOR HOLLOW C-90 BLOCK)

*LAGS AND BOLTS CAN BE COUNTERSUNK TO PROVIDE A FLUSH MOUNTING SURFACE.
*PREPARATION OF WOOD JAMBS BY OTHERS

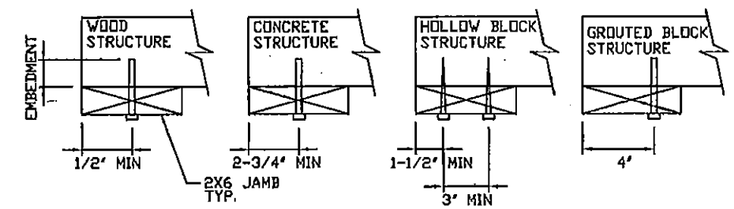

PRODUCT REVISED
as complying with the Florida Building Code
Acceptance No 12-0228.01
Expiration Date 09/06/2017
By
Miami Dade Product Control

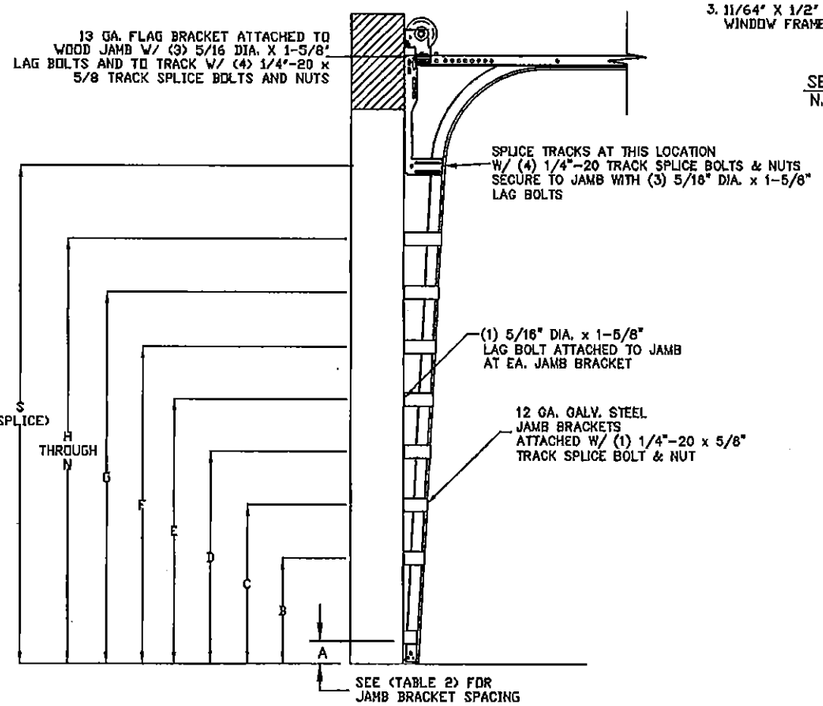

TRACK CONFIGURATION FOR 6'6" UP TO 14' TALL DOORS

PRODUCT REVISED
as complying with the Florida Building Code
Acceptance No 15-0505.02
Expiration Date 09/06/2017
By
Miami Dade Product Control

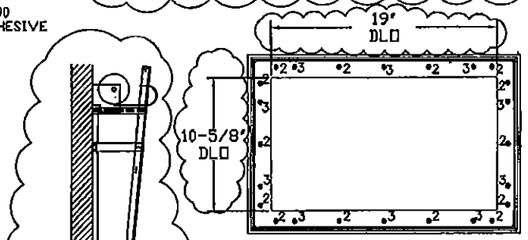

IMPACT GLAZING FASTENER DETAIL
N.T.S.

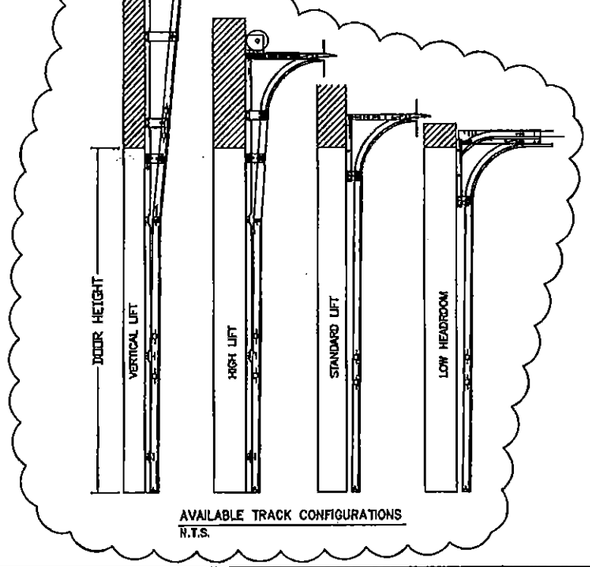

AVAILABLE TRACK CONFIGURATIONS
N.T.S.

REV	DESCRIPTION OF REVISIONS	DATE	BY
A	ADDED TITLE BLOCK TO PAGE 2	7/3/07	BHG
B	REVISED NOTE 8	12/15/08	CBT
C	UPDATED TO FBC 2010	12/5/11	RLR

MAX SIZE
9' x 14'

DESIGN LOADS
+57.0 PSF
-67.0 PSF

LARGE MISSILE IMPACT RESISTANCE

THOMAS L. SHELMERDINE LICENSE No 0048579 STATE OF FLORIDA PROFESSIONAL ENGINEER

Amarr
165 CARRIAGE COURT WINSTON-SALEM, N.C. 27105 WWW.AMARR.COM

MODEL 950 HERITAGE 1000, 2000
MODEL 655 OAK SUMMIT (24g) 1000, 2000
SHORT, LONG, FLUSH, & OAK SUMMIT PANELS

SIZE	DRAWN BY SKW	DATE 04/9/07	DRAWING NUMBER
B	CHECKED BY BHG	DATE 04/9/07	IRC-9509-189-21-I

ENGINEER: THOMAS L. SHLMERDINE P.E. LIC. No. 0048579 | SHEET 2 OF 3

MIAMI-DADE COUNTY
PRODUCT CONTROL SECTION
11805 SW 26 Street, Room 208
Miami, Florida 33175-2474
T (786) 315-2590 F (786) 315-2599
www.miamidade.gov/economy

DEPARTMENT OF REGULATORY AND ECONOMIC RESOURCES (RER)
BOARD AND CODE ADMINISTRATION DIVISION

NOTICE OF ACCEPTANCE (NOA)

ECO Windows Systems, LLC
9114 N. W. 106th Street,
Medley, FL 33178

SCOPE:

This NOA is being issued under the applicable rules and regulations governing the use of construction materials. The documentation submitted has been reviewed and accepted by Miami-Dade County RER -Product Control Section to be used in Miami Dade County and other areas where allowed by the Authority Having Jurisdiction (AHJ).

This NOA shall not be valid after the expiration date stated below. The Miami-Dade County Product Control Section (In Miami Dade County) and/or the AHJ (in areas other than Miami Dade County) reserve the right to have this product or material tested for quality assurance purposes. If this product or material fails to perform in the accepted manner, the manufacturer will incur the expense of such testing and the AHJ may immediately revoke, modify, or suspend the use of such product or material within their jurisdiction. RER reserves the right to revoke this acceptance, if it is determined by Miami-Dade County Product Control Section that this product or material fails to meet the requirements of the applicable building code.

This product is approved as described herein, and has been designed to comply with the Florida Building Code, including the High Velocity Hurricane Zone.

DESCRIPTION: Series "700" Aluminum Sliding Glass Door w/ Reinforcements-L.M.I.

APPROVAL DOCUMENT: Drawing No. **W13-49 REV C**, titled "Series- 700 Alum SLD. Glass Door (L.M.I.)", sheets 1 through 12 of 12, prepared by Al-Farooq Corporation, dated 09/27/13 and last revised on DEC 02, 2015, signed and sealed by Javad Ahmad, P.E., bearing the Miami-Dade County Product Control Revision stamp with the Notice of Acceptance number and expiration date by the Miami-Dade County Product Control Section.

MISSILE IMPACT RATING: Large and Small Missile Impact Resistant

Limitations:

1. See Design Pressures Vs Reinforcing, glass types and anchor capacity charts in sheet **5**. Exterior (positive) design pressures are limited to **+70 PSF** w / **2-3/4"** sill riser and **+47.0 PSF** w/ **2"** sill riser. Lower design Pressure from charts applies to entire system.
2. See approved configurations in sheets 1 thru 4. The max frame are of alternate sizes not to exceed tested frame area per FBC requirements.

LABELING: Each unit shall bear a permanent label with the manufacturer's name or logo, city, state and series and following statement: "Miami-Dade County Product Control Approved", noted herein.

RENEWAL of this NOA shall be considered after a renewal application has been filed and there has been no change in the applicable building code negatively affecting the performance of this product.

TERMINATION of this NOA will occur after the expiration date or if there has been a revision or change in the materials, use, and/or manufacture of the product or process. Misuse of this NOA as an endorsement of any product, for sales, advertising or any other purposes shall automatically terminate this NOA. Failure to comply with any section of this NOA shall be cause for termination and removal of NOA.

ADVERTISEMENT: The NOA number preceded by the words Miami-Dade County, Florida, and followed by the expiration date may be displayed in advertising literature. If any portion of the NOA is displayed, then it shall be done in its entirety.

INSPECTION: A copy of this entire NOA shall be provided to the user by the manufacturer or its distributors and shall be available for inspection at the job site at the request of the Building Official.

This NOA **revises #13-0912.02** consists of this page 1 and evidence pages E-1, as well as approval document mentioned above.

The submitted documentation was reviewed by **Ishaq I. Chanda, P.E.**

MIAMI-DADE COUNTY APPROVED
12/4/15

NOA No. 15-0612.05
Expiration Date: March 20, 2019
Approval Date: December 17, 2015

INSTRUCTIONS:

USE CHARTS AS FOLLOWS.

STEP 1 SEE CHART #1 ON SHEET 5 FOR GLASS CAPACITY AND REINFORCING REQUIREMENTS.

STEP 2 SELECT SILL TYPE FROM SHEET 7 AND LIMIT EXT.(+) DESIGN PRESSURE AS SHOWN ON DETAIL.

STEP 3 SEE CHART #2 ON SHEET 5 FOR ANCHOR CAPACITY.

STEP 4 THE LOWEST VALUE RESULTING FROM STEPS 1 THRU 3 SHALL APPLY TO ENTIRE SYSTEM.

DAYLITE OPENINGS WIDTHS:
FIXED STILE–INTERLOCK = PANEL WIDTH – 7.125"
INTERLOCK–ASTRAGAL = PANEL WIDTH – 7.250"

DAYLITE OPENING HEIGHT:
PANEL HEIGHT – 6.50"

PANEL HEIGHT = DOOR FRAME HEIGHT – 1.5625"

THESE DOORS ARE RATED FOR LARGE & SMALL MISSILE IMPACT. SHUTTERS ARE NOT REQUIRED.

SERIES–700
ALUMINUM SLIDING GLASS DOOR

THIS PRODUCT HAS BEEN DESIGNED AND TESTED TO COMPLY WITH THE REQUIREMENTS OF THE 2014 (5TH EDITION) FLORIDA BUILDING CODE INCLUDING HIGH VELOCITY HURRICANE ZONE (HVHZ).

1BY OR 2BY WOOD BUCKS BY OTHERS, MUST BE ANCHORED PROPERLY TO TRANSFER LOADS TO THE STRUCTURE.

ANCHORS SHALL BE AS LISTED, SPACED AS SHOWN ON DETAILS, ANCHORS EMBEDMENT TO BASE MATERIAL SHALL BE BEYOND WALL DRESSING OR STUCCO.

ANCHORING OR LOADING CONDITIONS NOT SHOWN IN THESE DETAILS ARE NOT PART OF THIS APPROVAL.

A LOAD DURATION INCREASE IS USED IN DESIGN OF ANCHORS INTO WOOD ONLY.

ALL SHIMS TO BE HIGH IMPACT, NON–METALLIC AND NON–COMPRESSIBLE.

MATERIALS INCLUDING BUT NOT LIMITED TO STEEL/METAL SCREWS, THAT COME INTO CONTACT WITH OTHER DISSIMILAR MATERIALS SHALL MEET THE REQUIREMENTS OF THE FLORIDA BLDG. CODE.

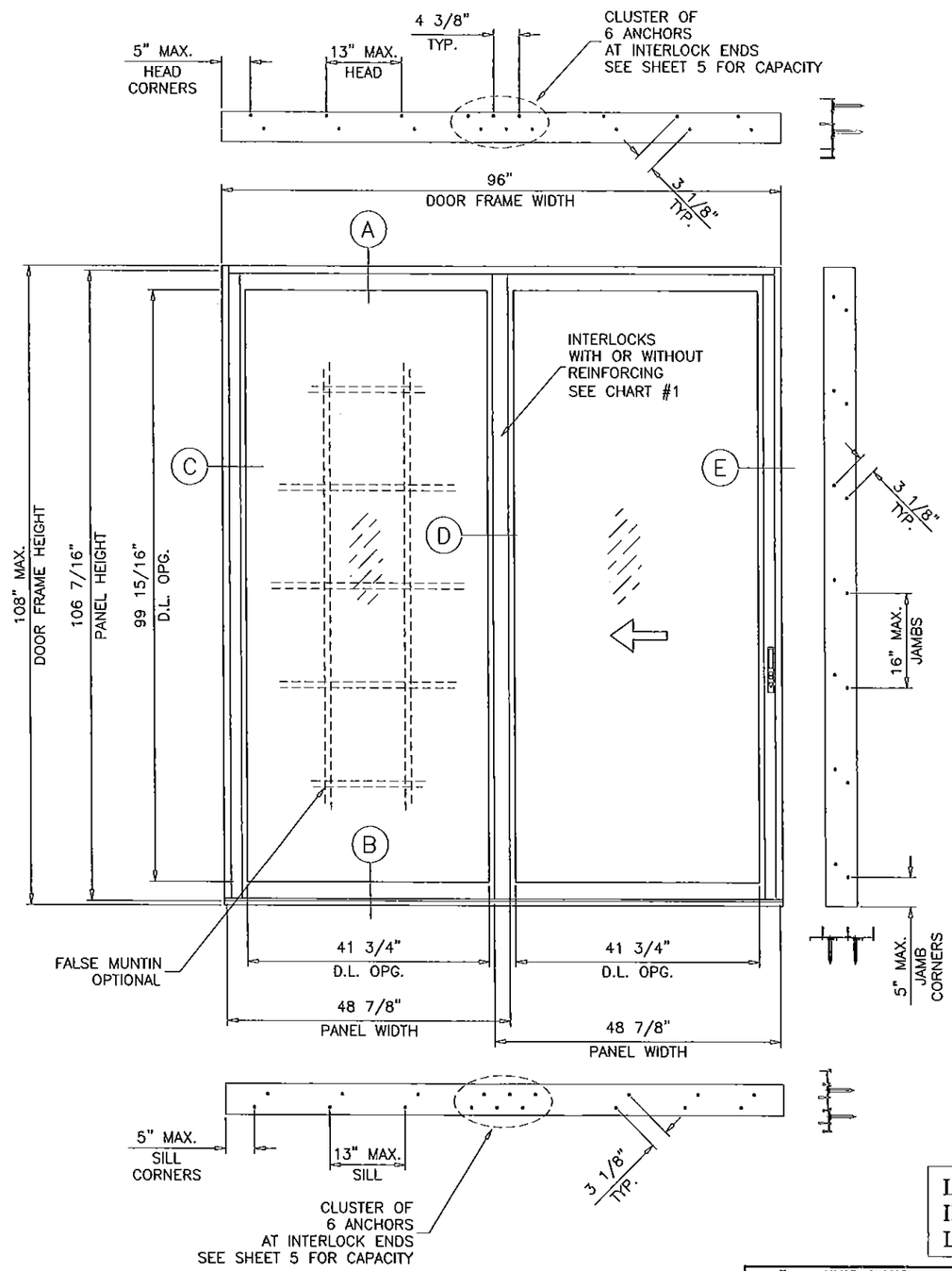

TYPICAL ELEVATION

OX

ALTERNATE SIZE UNITS:
MAX. FRAME AREA OF DOORS NOT TO EXCEED THE TESTED FRAME AREA OF 72 SQ. FT.

PRODUCT REVISED
no complying with the Florida Building Code
Acceptance No. 15-0612.05
Expiration Date MAR 20, 2019
Product Control

LAMINATED GLASS
INSUL. LAM. GLASS
LARGE MISSILE IMPACT

Engr: JAVAD AHMAD
CIVIL
FLA. PE # 70592
C.A.N. 3538
DEC 02 2015

AL-FAROOQ CORPORATION
ENGINEERS & PRODUCT DEVELOPMENT
9360 SUNSET DRIVE, SUITE 220
MIAMI, FLORIDA 33173
TEL. (305) 264-8100 FAX. (305) 262-6978
COMP–ANL\W13–49ECO

SERIES–700 ALUM SLIDING GLASS DOOR (L.M.I.)

ECO WINDOW SYSTEMS, LLC.
9114 N.W. 106 STREET
MEDLEY, FL. 33178
TEL (305) 885–5299 FAX (305) 885–5902

revisions:

no	date	by	description
A	01.16.14		REV. PER RER COMMENTS
B	06.08.15		UPDATED TO 2014 FBC
C	12.01.15		REV. PER RER COMMENTS

date: 09–27–13
scale: 1/2"=1'–0"
dr. by: HAMID
chk. by:

drawing no.
W13–49

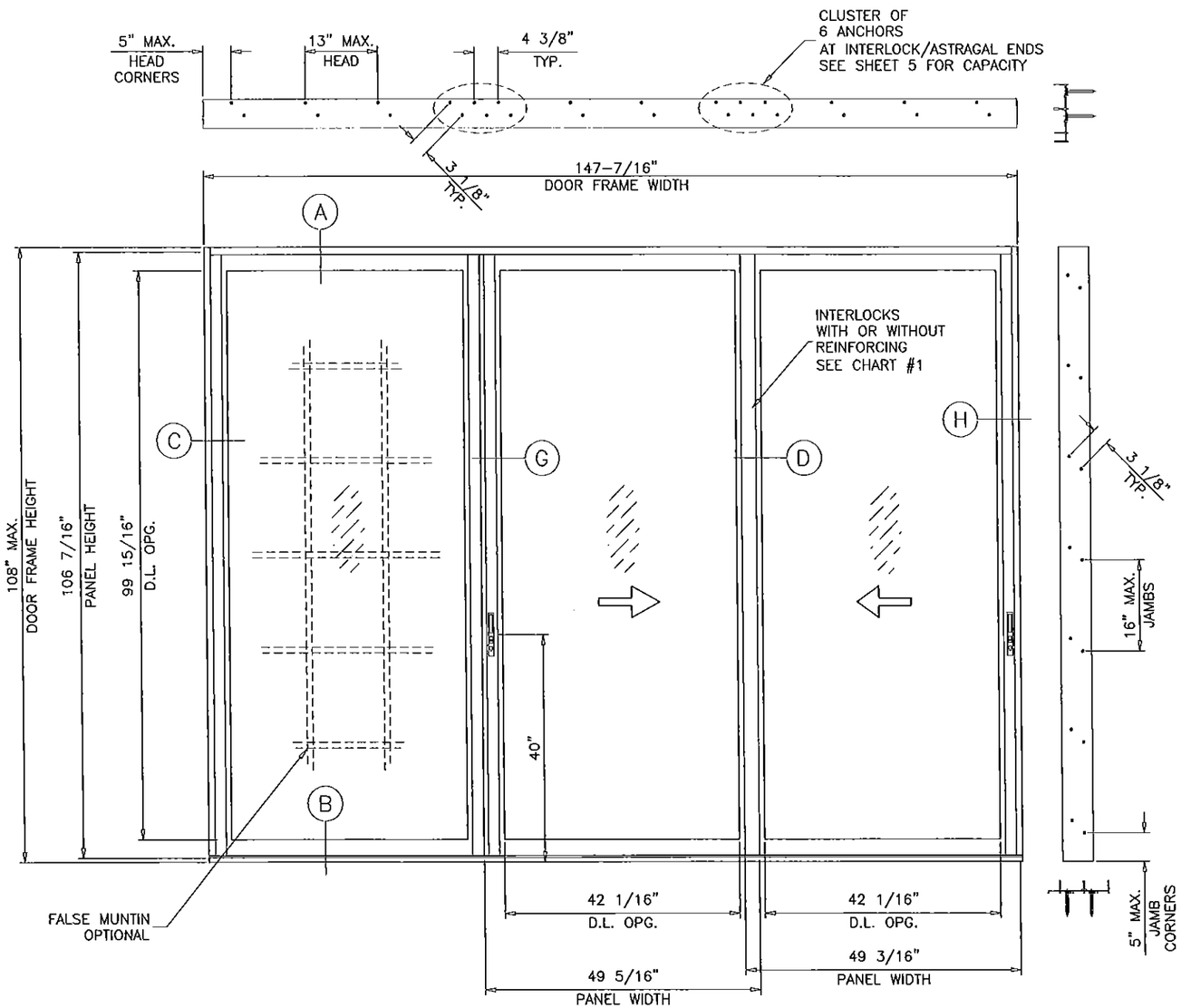

TYPICAL ELEVATION

OXX

ALTERNATE SIZE UNITS:
MAX. FRAME AREA OF DOORS NOT TO EXCEED
THE TESTED FRAME AREA OF 110.7 SQ. FT.

PRODUCT REVISED
to complying with the Florida
Building Code
Acceptance No 15-0612.05
Expiration Date 3/2019
By [illegible]
Miami-Dade Product Control

Engr: JAVAD AHMAD
CIVIL
FLA. PE # 70592
C.A.N. 3538
DEC 02 2015

AL-FAROOQ CORPORATION
ENGINEERS & PRODUCT DEVELOPMENT
9360 SUNSET DRIVE, SUITE 220
MIAMI, FLORIDA 33173
TEL. (305) 264-8100 FAX. (305) 262-6978

COMP-ANL\W13-49ECO

SERIES-700 ALUM SLIDING GLASS DOOR (L.M.I.)

ECO WINDOW SYSTEMS, LLC.
9114 N.W. 106 STREET
MEDLEY, FL. 33178
TEL. (305) 885-5299 FAX (305) 885-5902

revisions:

no	date	by	description
A	01.16.14		REV. PER RER COMMENTS
B	06.08.15		UPDATED TO 2014 FBC
C	12.01.15		REV. PER RER COMMENTS

date: 09-27-13
scale: 1/2"=1'-0"
dr. by: HAMID
chk. by:

drowing no.
W13-49

sheet 2 of 12

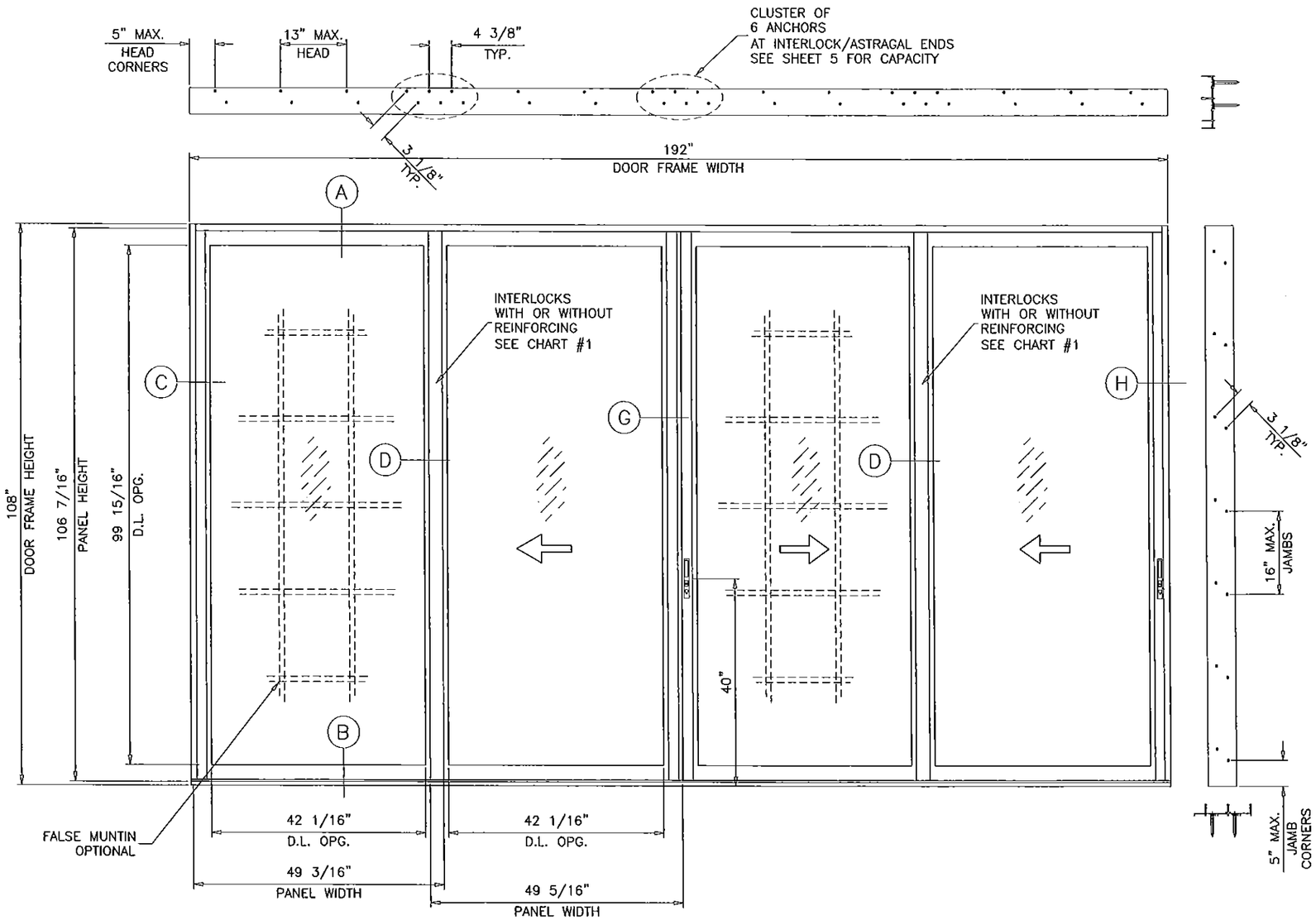

TYPICAL ELEVATION

OXXX

ALTERNATE SIZE UNITS:
MAX. FRAME AREA OF DOORS NOT TO EXCEED
THE TESTED FRAME AREA OF 144 SQ. FT.

PRODUCT REVISED
no complying with the Florida
Building Code
Acceptance No. 15-0612.05
Expiration Date 3/20/19
By Ishac Elkhouri
Miami Dade Product Control

Engr: JAVAD AHMAD
CIVIL
FLA. PE # 70592
C.A.N. 3538
DEC 02 2015

AL-FAROOQ CORPORATION
ENGINEERS & PRODUCT DEVELOPMENT
9360 SUNSET DRIVE, SUITE 220
MIAMI, FLORIDA 33173
TEL. (305) 264-8100 FAX. (305) 262-6978
COMP-ANL\W13-49ECO

SERIES-700 ALUM SLIDING GLASS DOOR (L.M.I.)

ECO WINDOW SYSTEMS, LLC.
9114 N.W. 106 STREET
MEDLEY, FL. 33178
TEL. (305) 885-5299 FAX (305) 885-5902

revisions:

no	date	by	description
A	01.16.14		REV. PER RER COMMENTS
B	05.08.15		UPDATED TO 2014 FBC
C	12.01.15		REV. PER RER COMMENTS

date: 09-27-13
scale: 1/2"=1'-0"
dr. by: HAMID
chk. by:

drawing no.
W13-49

MIAMI-DADE COUNTY
PRODUCT CONTROL SECTION
11805 SW 26 Street, Room 208
Miami, Florida 33175-2474
T (786) 315-2590 F (786) 315-2599
www.miamidade.gov/economy

DEPARTMENT OF REGULATORY AND ECONOMIC RESOURCES (RER)
BOARD AND CODE ADMINISTRATION DIVISION

NOTICE OF ACCEPTANCE (NOA)

ECO Windows Systems, LLC
9114 N. W. 106th Street,
Medley, FL 33178

SCOPE:

This NOA is being issued under the applicable rules and regulations governing the use of construction materials. The documentation submitted has been reviewed and accepted by Miami-Dade County PERA -Product Control Section to be used in Miami Dade County and other areas where allowed by the Authority Having Jurisdiction (AHJ).
This NOA shall not be valid after the expiration date stated below. The Miami-Dade County Product Control Section (In Miami Dade County) and/or the AHJ (in areas other than Miami Dade County) reserve the right to have this product or material tested for quality assurance purposes. If this product or material fails to perform in the accepted manner, the manufacturer will incur the expense of such testing and the AHJ may immediately revoke, modify, or suspend the use of such product or material within their jurisdiction. PERA reserves the right to revoke this acceptance, if it is determined by Miami-Dade County Product Control Section that this product or material fails to meet the requirements of the applicable building code.
This product is approved as described herein, and has been designed to comply with the Florida Building Code, including the High Velocity Hurricane Zone.

DESCRIPTION: Series 600 Aluminum Outswing Doors-L.M.I.

APPROVAL DOCUMENT: Drawing No. **W12-08 Rev C**, titled "Series 600 Alum Outswing Entrance Door (L.M.I.)", sheets 1 through 9 of 9 (inclusive 7.1), prepared by AL-Farooq Corporation, dated 02/13/12 and last revised on SEP 04, 2015, signed and sealed by Javad Ahmad, P.E., bearing the Miami-Dade County Product Control Revision stamp with the Notice of Acceptance number and expiration date by the Miami-Dade County Product Control Section.

MISSILE IMPACT RATING: Large and Small Missile Impact Resistant

Limitation:

1. See Single or Double Door Design Pressure (DP) ratings in sheet 2 . See Single or Double Door DP ratings with sidelites (w/wo Reinforcement) and Standalone Single sidelite rating in sheet 3. The max door leaf width shall not to exceed 37". See locking options 1 & 2 in sheet 7.1.
2. Laminated glass types G1 and G2 are limited to .090" Kurarary's Butacite PVB and glass type G3 is limited to Insulated laminated glass w/ .090" Solutia interlayer.

LABELING: Each unit shall bear a permanent label with the manufacturer's name or logo, city, state and series and following statement: "Miami-Dade County Product Control Approved", noted herein.

RENEWAL of this NOA shall be considered after a renewal application has been filed and there has been no change in the applicable building code negatively affecting the performance of this product.

TERMINATION of this NOA will occur after the expiration date or if there has been a revision or change in the materials, use, and/or manufacture of the product or process. Misuse of this NOA as an endorsement of any product, for sales, advertising or any other purposes shall automatically terminate this NOA. Failure to comply with any section of this NOA shall be cause for termination and removal of NOA.

ADVERTISEMENT: The NOA number preceded by the words Miami-Dade County, Florida, and followed by the expiration date may be displayed in advertising literature. If any portion of the NOA is displayed, then it shall be done in its entirety.

INSPECTION: A copy of this entire NOA shall be provided to the user by the manufacturer or its distributors and shall be available for inspection at the job site at the request of the Building Official.
This NOA **revises** NOA **#12-0402.03** and consists of this page 1 and evidence pages E-1, as well as approval document mentioned above.
The submitted documentation was reviewed by **Ishaq I. Chanda, P.E.**

MIAMI-DADE COUNTY APPROVED
10/2/15

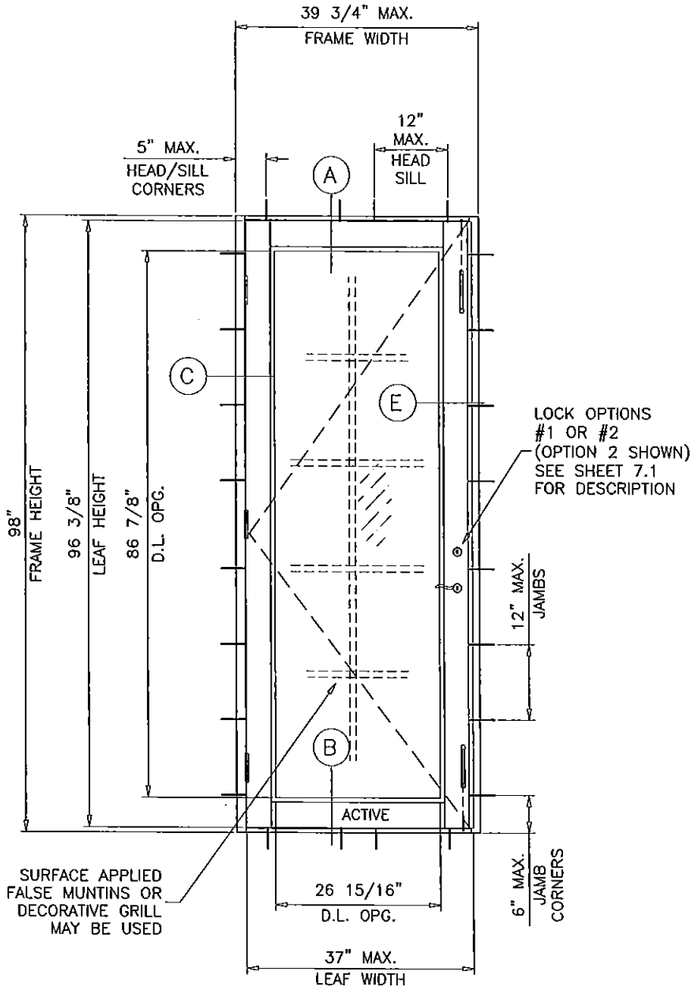

(X)

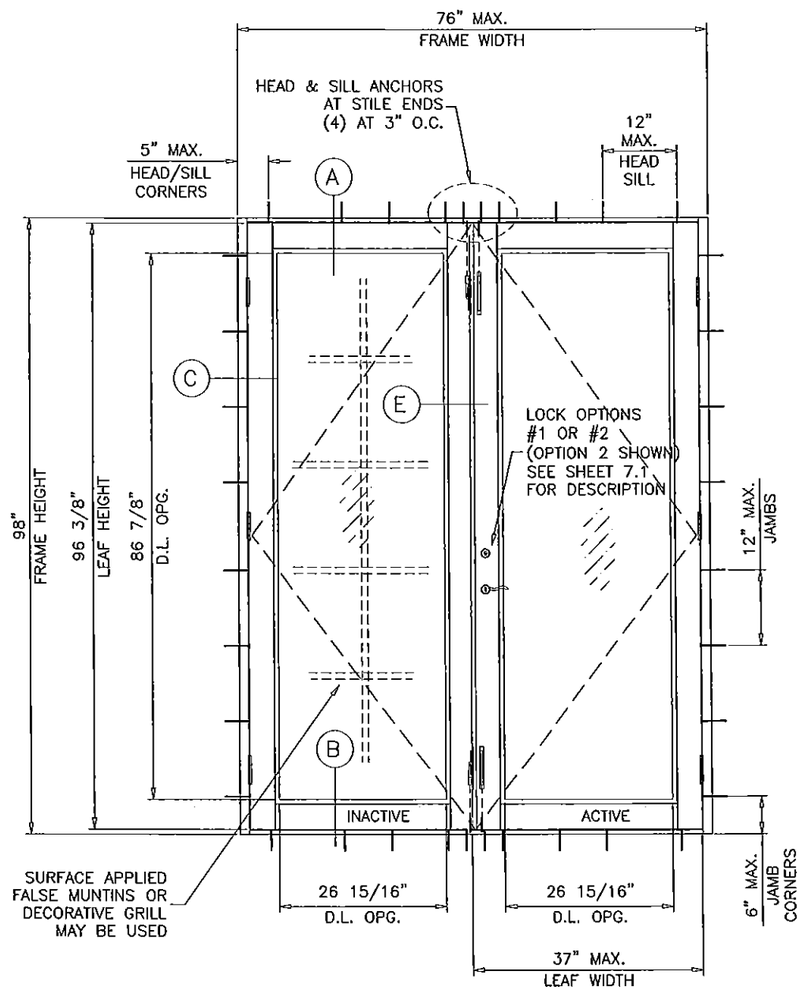

(XX)

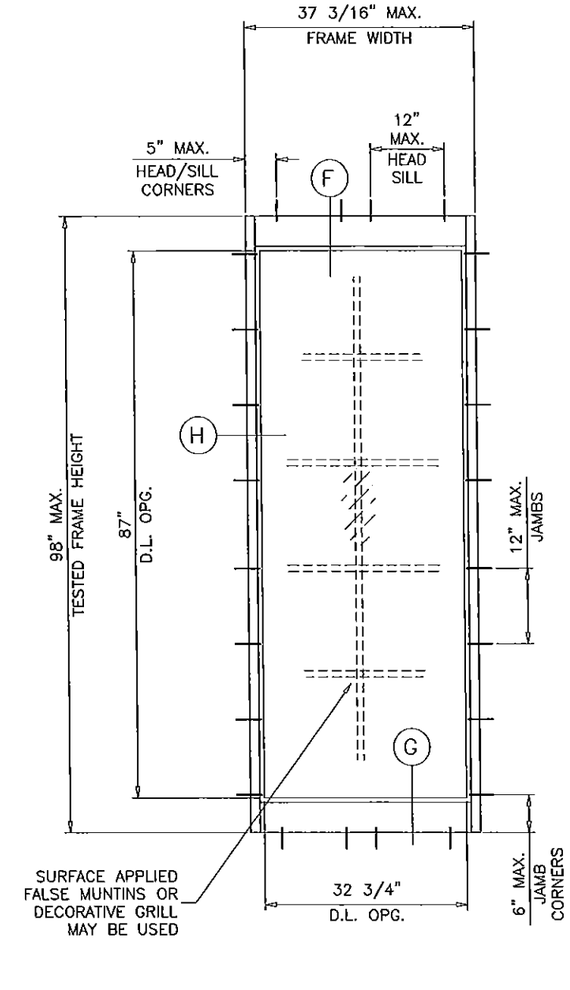

(O)

STAND ALONE SINGLE SIDELITE
SEE SHEET 3 FOR CAPACITY

DOORS LOAD CAPACITY – PSF SINGLE DOORS (X)				
DOOR DIMS.			LAMINATED GLASS	
FRAME WIDTH	LEAF WIDTH	FRAME HEIGHT	EXT.(+)	INT.(–)
39–3/4"	37"	98"	70.0	75.0

DOORS LOAD CAPACITY – PSF DOUBLE (XX)				
DOOR DIMS.			LAMINATED GLASS	
FRAME WIDTH	LEAF WIDTH	FRAME HEIGHT	EXT.(+)	INT.(–)
76"	37"	98"	70.0	75.0

GLASS D.L.O. DIMS.

D.L.O. HEIGHT = FRAME HEIGHT – 11.125"
D.L.O. WIDTH (X DOORS) = FRAME WIDTH – 12.813"
D.L.O. WIDTH (XX DOORS) = (FRAME WIDTH – 22.125")/2

NOTE:
EGRESS REQUIREMENTS TO BE REVIEWED
BY BUILDING OFFICIAL.

NOTE:
GLASS CAPACITIES ON THIS SHEET ARE
BASED ON ASTM E1300–09 (3 SEC. GUSTS)
AND FLORIDA BUILDING COMMISSION
DECLARATORY STATEMENT DCA05–DEC–219

Engr: JAVAD AHMAD
CIVIL
FLA. PE # 70592
C.A.N. 3538

SEP 04 2015

PRODUCT REVISED
as complying with the Florida
Building Code
Acceptance No. 15-0603.13
Expiration Date 3/20/19
By Ishaq I. Ahmad
Miami Dade Product Control

AL-FAROOQ CORPORATION
ENGINEERS & PRODUCT DEVELOPMENT
1235 S.W. 87 AVE
MIAMI, FLORIDA 33174
TEL. (305) 264-8100 FAX. (305) 262-6978
COMP-ANL\W12-08ECO

SERIES 600 ALUM OUTSWING ENTRANCE DOOR (L.M.I.)

ECO WINDOW SYSTEMS, LLC.
9114 N.W. 106 STREET
MEDLEY, FL. 33178
TEL. (305) 885-5299 FAX (305) 885-5902

revisions:			
no	date	by	description
A	06.26.12		REV. PER PERA COMMENTS
B	06.02.15		UPDATED TO 2014 FBC
C	03.02.15		REV. PER RER COMMENTS

date: 02-13-12
scale: 1/2"=1'-0"
dr. by: HAMID
chk. by:

drawing no.
W12-08

DESIGN LOAD CAPACITY – PSF STAND ALONE SINGLE SIDELITES			
SIDELITE FRAME WIDTH INCHES	SIDELITE FRAME HEIGHT INCHES	WITHOUT REINFORCING	
		EXT.(+)	INT.(–)
24	82	70.0	75.0
30		70.0	75.0
36		70.0	75.0
37		70.0	75.0
42		61.7	66.1
24	86	70.0	75.0
30		70.0	75.0
36		70.0	75.0
37		70.0	75.0
42		61.7	66.1
24	92	70.0	75.0
30		69.8	69.8
36		64.1	64.1
37		63.3	63.3
24	98	63.3	63.3
30		57.8	57.8
36		53.1	53.1
37		52.4	52.4

DESIGN LOAD CAPACITY – PSF SIDELITES WITH SINGLE OR DOUBLE LEAF DOORS (SEE NOTE BELOW)					
SIDELITE FRAME WIDTH INCHES	SIDELITE FRAME HEIGHT INCHES	WITHOUT REINFORCING		WITH REINFORCING	
		EXT.(+)	INT.(–)	EXT.(+)	INT.(–)
24	82	70.0	75.0	70.0	75.0
30		70.0	75.0	70.0	75.0
36		70.0	75.0	70.0	75.0
37		70.0	75.0	70.0	75.0
42		61.7	66.1	61.7	66.1
24	86	70.0	75.0	70.0	75.0
30		70.0	75.0	70.0	75.0
36		70.0	75.0	70.0	75.0
37		70.0	75.0	70.0	75.0
42		61.7	66.1	61.7	66.1
24	92	70.0	75.0	70.0	75.0
30		69.8	69.8	70.0	75.0
36		64.1	64.1	70.0	75.0
37		63.3	63.3	70.0	75.0
24	98	63.3	63.3	70.0	75.0
30		57.8	57.8	70.0	75.0
36		53.1	53.1	70.0	75.0
37		52.4	52.4	70.0	75.0

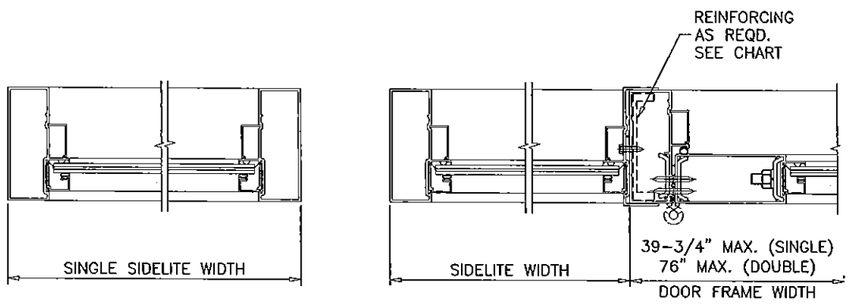

NOTE:
FOR DOORS CAPACITIES SEE SHEET 2.
FOR SIDELITE CAPACITIES SEE CHART ABOVE.
LOWER VALUES FROM DOOR OR SIDELITE CHART WILL APPLY TO ENTIRE SYSTEM.

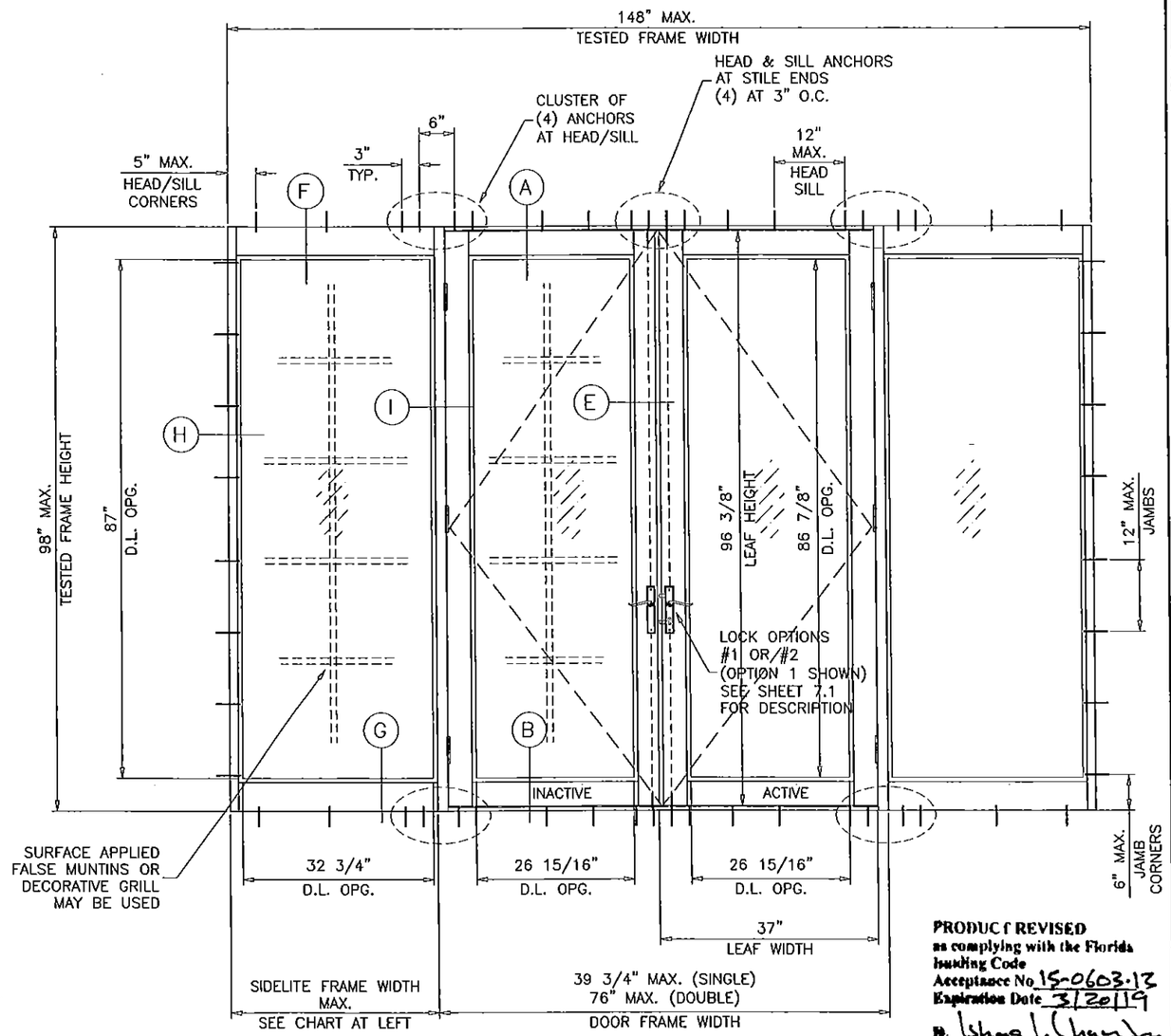

(OXXO)

PRODUCT REVISED
as complying with the Florida Building Code
Acceptance No. 15-0603.13
Expiration Date 3/20/19
By Ishaq I. Chaudhry
Manal Diab Product Control

MAX. UNIT TESTED FRAME AREA NOT TO EXCEED 100.72 SQ. FT. PER FBC 2014

GLASS D.L.O. DIMS.
D.L.O. HEIGHT (SIDELITE) = FRAME HEIGHT – 11.000"
D.L.O. WIDTH (SIDELITE) = FRAME WIDTH – 4.438"

NOTE:
GLASS CAPACITIES ON THIS SHEET ARE BASED ON ASTM E1300–09 (3 SEC. GUSTS) AND FLORIDA BUILDING COMMISSION DECLARATORY STATEMENT DCA05–DEC–219

Engr: JAVAD AHMAD
CIVIL
FL.A. PE # 70592
C.A.N. 3538
SEP 04 2015

AL-FAROOQ CORPORATION
ENGINEERS & PRODUCT DEVELOPMENT
1235 S.W. 87 AVE
MIAMI, FLORIDA 33174
TEL. (305) 264-8100 FAX. (305) 262-6978
COMP-ANL\W12-08ECO

SERIES 600 ALUM OUTSWING ENTRANCE DOOR (L.M.I.)

ECO WINDOW SYSTEMS, LLC.
9114 N.W. 106 STREET
MEDLEY, FL. 33178
TEL. (305) 885-5299 FAX (305) 885-5902

revisions:			
no	date	by	description
A	06.26.12		REV. PER PERA COMMENTS
B	06.02.15		UPDATED TO 2014 FBC
C	09.02.15		REV. PER RER COMMENTS

date: 02-13-12
scale: 1/2"=1'-0"
dr. by: HAMID
chk. by:

drawing no. W12-08

MIAMI-DADE COUNTY
DEPARTMENT OF REGULATORY AND ECONOMIC RESOURCES (RER)
BOARD AND CODE ADMINISTRATION DIVISION

MIAMI-DADE COUNTY
PRODUCT CONTROL SECTION
11805 SW 26 Street, Room 208
T (786) 315-2590 F (786) 315-2599
www.miamidade.gov/economy

NOTICE OF ACCEPTANCE (NOA)

Eco Window Systems, LLC
9114 NW 106 Street
Medley, FL 33178

SCOPE:

This NOA is being issued under the applicable rules and regulations governing the use of construction materials. The documentation submitted has been reviewed and accepted by Miami-Dade County RER - Product Control Section to be used in Miami Dade County and other areas where allowed by the Authority Having Jurisdiction (AHJ).

This NOA shall not be valid after the expiration date stated below. The Miami-Dade County Product Control Section (In Miami Dade County) and/or the AHJ (in areas other than Miami Dade County) reserve the right to have this product or material tested for quality assurance purposes. If this product or material fails to perform in the accepted manner, the manufacturer will incur the expense of such testing and the AHJ may immediately revoke, modify, or suspend the use of such product or material within their jurisdiction. RER reserves the right to revoke this acceptance, if it is determined by Miami-Dade County Product Control Section that this product or material fails to meet the requirements of the applicable building code.

This product is approved as described herein, and has been designed to comply with the Florida Building Code, including the High Velocity Hurricane Zone.

DESCRIPTION: Series "Eco-Guard 200" Aluminum Horizontal Rolling Window – L.M.I.

APPROVAL DOCUMENT: Drawing No. **W09-12**, titled "Eco-Guard Series-200 Alum. Horiz. Rolling Wdw. (L.M.I.)" sheets 1 through 7 of 7, dated 02/24/09, with revision E dated 07/15/15, prepared by Al-Farooq Corporation, signed and sealed by Javad Ahmad, P.E., bearing the Miami-Dade County Product Control Revision stamp with the Notice of Acceptance number and expiration date by the Miami-Dade County Product Control Section.

MISSILE IMPACT RATING: Large and Small Missile Impact Resistant

LABELING: Each unit shall bear a permanent label with the manufacturer's name or logo, city, state, model/series, and following statement: "Miami-Dade County Product Control Approved", unless otherwise noted herein.

RENEWAL of this NOA shall be considered after a renewal application has been filed and there has been no change in the applicable building code negatively affecting the performance of this product.

TERMINATION of this NOA will occur after the expiration date or if there has been a revision or change in the materials, use, and/or manufacture of the product or process. Misuse of this NOA as an endorsement of any product, for sales, advertising or any other purposes shall automatically terminate this NOA. Failure to comply with any section of this NOA shall be cause for termination and removal of NOA.

ADVERTISEMENT: The NOA number preceded by the words Miami-Dade County, Florida, and followed by the expiration date may be displayed in advertising literature. If any portion of the NOA is displayed, then it shall be done in its entirety.

INSPECTION: A copy of this entire NOA shall be provided to the user by the manufacturer or its distributors and shall be available for inspection at the job site at the request of the Building Official.

This NOA **revises NOA# 14-0317.01** and consists of this page 1 and evidence pages E-1, E-2 and E-3, as well as approval document mentioned above.

The submitted documentation was reviewed by **Manuel Perez, P.E.**

MIAMI-DADE COUNTY APPROVED

8/24/15

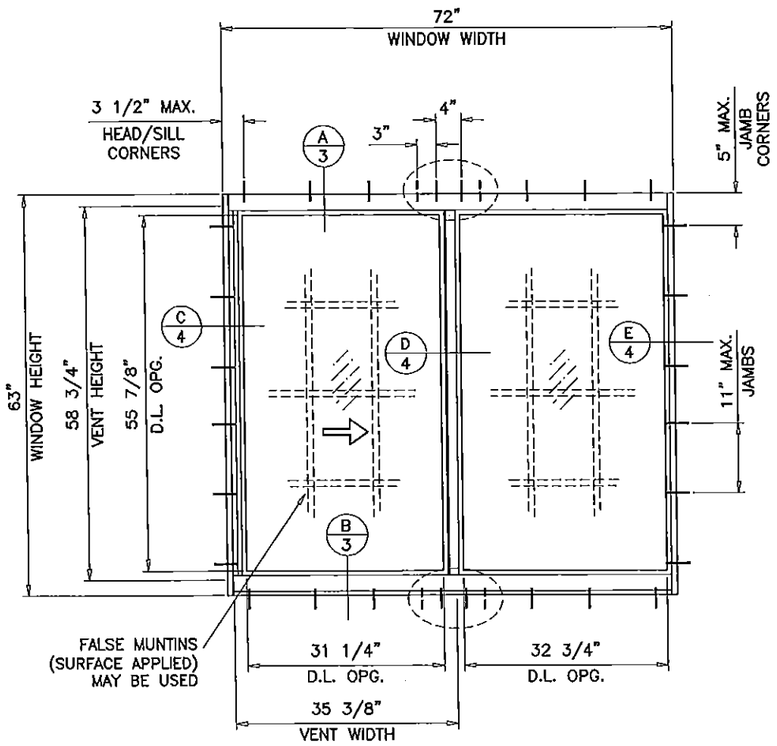

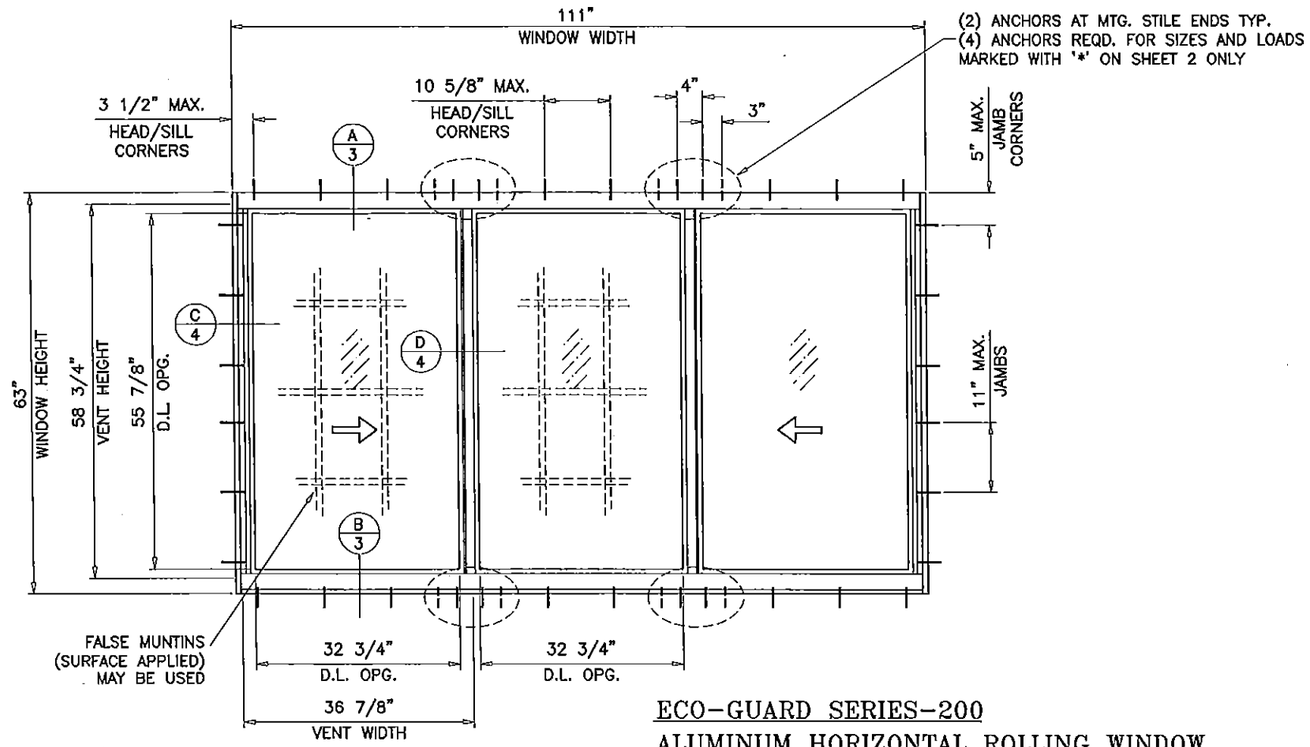

TYPICAL ELEVATIONS

ECO-GUARD SERIES-200
ALUMINUM HORIZONTAL ROLLING WINDOW

DESIGN LOAD RATINGS FOR THESE WINDOWS TO BE AS PER CHARTS SHOWN ON SHEETS 2.

APPROVAL APPLIES TO SINGLE UNITS OR SIDE BY SIDE COMBINATIONS OF H.R./H.R. OR HORIZONTAL ROLLING WITH OTHER WINDOW TYPES IN MODULES OF TWO OR MORE WINDOWS USING MIAMI-DADE COUNTY APPROVED MULLIONS IN BETWEEN. LOWER DESIGN PRESSURE FROM WINDOWS OR MULLION APPROVAL WILL APPLY TO ENTIRE SYSTEM.

THIS PRODUCT HAS BEEN DESIGNED AND TESTED TO COMPLY WITH THE REQUIREMENTS OF THE FLORIDA BUILDING CODE INCLUDING HIGH VELOCITY HURRICANE ZONE (HVHZ).

WOOD BUCKS BY OTHERS, MUST BE ANCHORED PROPERLY TO TRANSFER LOADS TO THE STRUCTURE.

ANCHORS SHALL BE AS LISTED, SPACED AS SHOWN ON DETAILS, ANCHORS EMBEDMENT TO BASE MATERIAL SHALL BE BEYOND WALL DRESSING OR STUCCO.

ANCHORING OR LOADING CONDITIONS NOT SHOWN IN THESE DETAILS ARE NOT PART OF THIS APPROVAL.

A LOAD DURATION INCREASE IS USED IN DESIGN OF ANCHORS INTO WOOD ONLY.

ALL SHIMS TO BE HIGH IMPACT, NON-METALLIC AND NON-COMPRESSIBLE.

MATERIALS INCLUDING BUT NOT LIMITED TO STEEL/METAL SCREWS, THAT COME INTO CONTACT WITH OTHER DISSIMILAR MATERIALS SHALL MEET THE REQUIREMENTS OF THE FLORIDA BUILDING CODE.

THESE WINDOWS ARE RATED FOR LARGE & SMALL MISSILE IMPACT. SHUTTERS ARE NOT REQUIRED.

TO QUALIFY FOR SMALL MISSILE IMPACT RATING EXTERIOR PLY OF GLASS TYPE 'C' MUST BE TEMPERED.

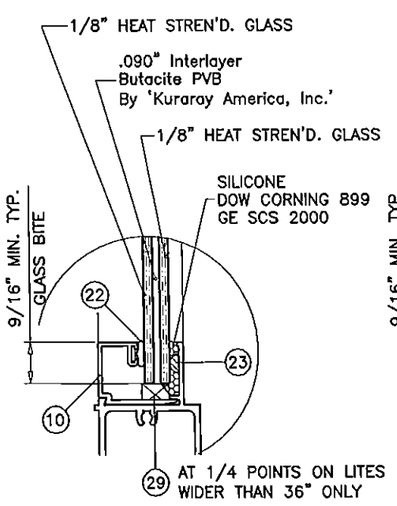

GLASS TYPE 'A'

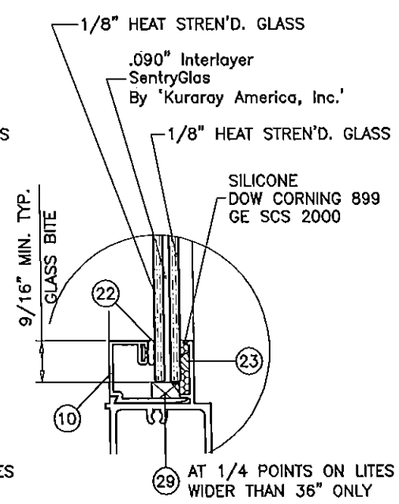

GLASS TYPE 'B'

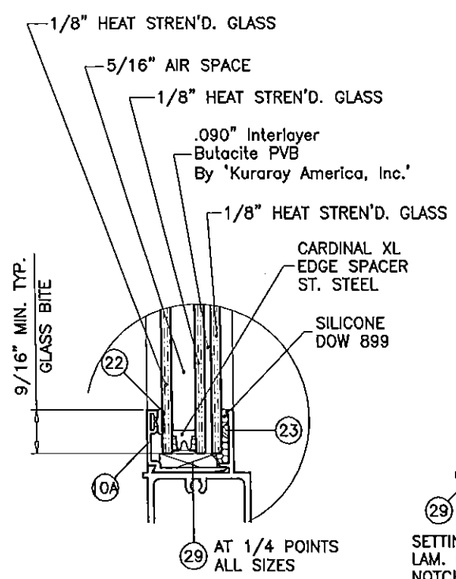

GLASS TYPE 'C'

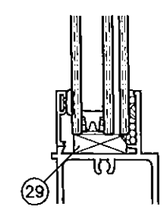

SETTING BLOCKS AT LAM. GLASS AND INSUL. LAM. GLASS NOTCH GLAZING BEAD LEG TO CLEAR BLOCKS

GLAZING OPTIONS

Engr: JAVAD AHMAD
CML
FLA. PE # 70592
C.A.N. 3538

JUL 20 2015

PRODUCT REVISED
as complying with the Florida Building Code
Acceptance No 15-0728.05
Expiration Date May 27, 2019
By Manuel Diaz
Miami-Dade Product Control

AL-FAROOQ CORPORATION
ENGINEERS & PRODUCT DEVELOPMENT
1235 S.W. 87 AVE
MIAMI, FLORIDA 33174
TEL. (305) 264-8100 FAX. (305) 262-6978

COMP-ANL\W09-12ECO

ECO-GUARD SERIES-200 ALUM HORIZ. ROLLING WDW. (L.M.I.)

ECO WINDOW SYSTEMS, LLC.
9114 N.W. 106 STREET
MEDLEY, FL. 33178
TEL. (305) 885-5299 FAX (305) 885-5902

revisions:

no	date	by	description
A	04.17.09		NO CHANGE THIS SHEET
B	01.31.12		UPDATED TO 2010 FBC
C	01.11.13		MANUF. ADDRESS REV.
D	02.12.14		GLASS OPTION ADDED
E	07.15.15		UPDATED TO 2014 FBC

date: 02-24-09
scale: 1/2"=1'-0"
dr. by: HAMID
chk. by:

drawing no. W09-12

sheet 1 of 7

MIAMI-DADE COUNTY
DEPARTMENT OF REGULATORY AND ECONOMIC RESOURCES (RER)
BOARD AND CODE ADMINISTRATION DIVISION

MIAMI-DADE COUNTY
PRODUCT CONTROL SECTION
11805 SW 26 Street, Room 208
T (786) 315-2590 F (786) 315-2599
www.miamidade.gov/economy

NOTICE OF ACCEPTANCE (NOA)

Eco Window Systems, LLC
9114 NW 106 Street
Medley, FL 33178

SCOPE:

This NOA is being issued under the applicable rules and regulations governing the use of construction materials. The documentation submitted has been reviewed and accepted by Miami-Dade County RER-Product Control Section to be used in Miami-Dade County and other areas where allowed by the Authority Having Jurisdiction (AHJ).

This NOA shall not be valid after the expiration date stated below. The Miami-Dade County Product Control Section (In Miami-Dade County) and/ or the AHJ (in areas other than Miami-Dade County) reserve the right to have this product or material tested for quality assurance purposes. If this product or material fails to perform in the accepted manner, the manufacturer will incur the expense of such testing and the AHJ may immediately revoke, modify, or suspend the use of such product or material within their jurisdiction. RER reserves the right to revoke this acceptance, if it is determined by Miami-Dade County Product Control Section that this product or material fails to meet the requirements of the applicable building code.

This product is approved as described herein, and has been designed to comply with the Florida Building Code, including the High Velocity Hurricane Zone.

DESCRIPTION: Series "Eco-Guard 100" Aluminum Single Hung Window – L.M.I.

APPROVAL DOCUMENT: Drawing No. **W09-08**, titled "Eco-Guard Series-100 Alum. S.H. Wdw. (L.M.I.)", sheets 1 through 6 of 6, dated 02/12/09, with revision **E** dated 06/23/15, prepared by Al-Farooq Corporation, signed and sealed by Javad Ahmad, P.E., bearing the Miami-Dade County Product Control Revision stamp with the Notice of Acceptance number and expiration date by the Miami-Dade County Product Control Section.

MISSILE IMPACT RATING: Large and Small Missile Impact Resistant

LABELING: Each unit shall bear a permanent label with the manufacturer's name or logo, city, state, model/series, and following statement: "Miami-Dade County Product Control Approved", unless otherwise noted herein.

RENEWAL of this NOA shall be considered after a renewal application has been filed and there has been no change in the applicable building code negatively affecting the performance of this product.

TERMINATION of this NOA will occur after the expiration date or if there has been a revision or change in the materials, use, and/ or manufacture of the product or process. Misuse of this NOA as an endorsement of any product, for sales, advertising or any other purposes shall automatically terminate this NOA. Failure to comply with any section of this NOA shall be cause for termination and removal of NOA.

ADVERTISEMENT: The NOA number preceded by the words Miami-Dade County, Florida, and followed by the expiration date may be displayed in advertising literature. If any portion of the NOA is displayed, then it shall be done in its entirety.

INSPECTION: A copy of this entire NOA shall be provided to the user by the manufacturer or its distributors and shall be available for inspection at the job site at the request of the Building Official.

This NOA **revises NOA No. 14-0317.02** and consists of this page 1 and evidence pages E-1 and E-2, as well as approval document mentioned above.

The submitted documentation was reviewed by **Manuel Perez, P.E.**

MIAMI-DADE COUNTY APPROVED

6/26/15

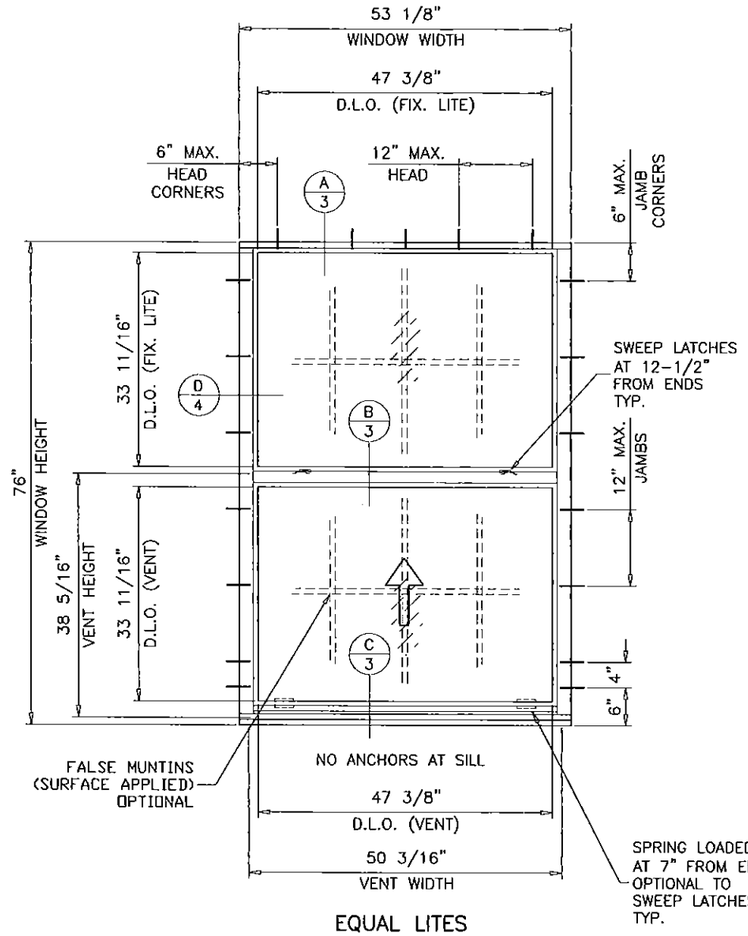

EQUAL LITES

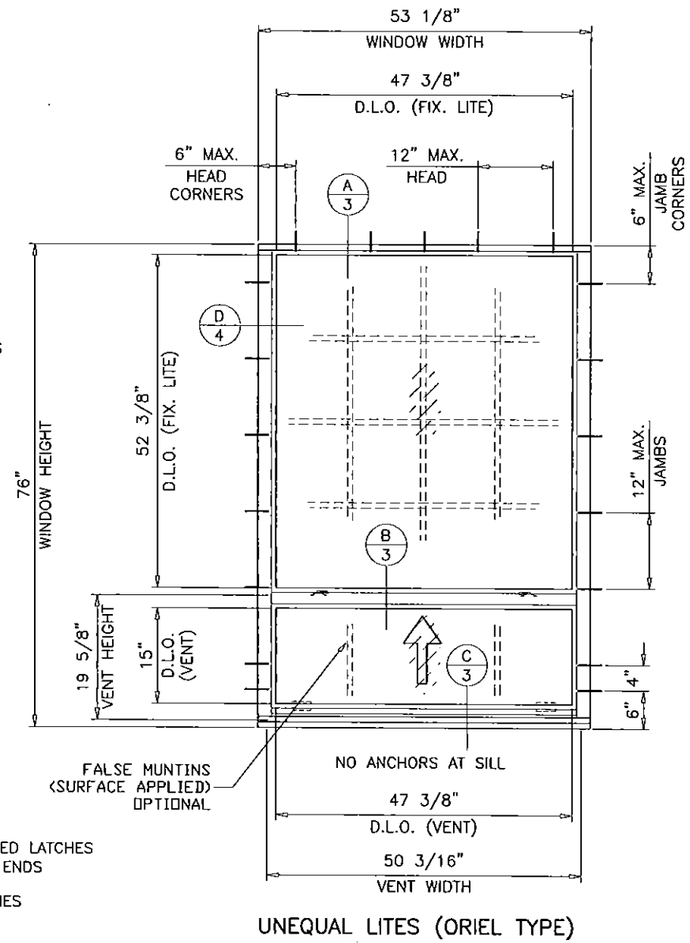

UNEQUAL LITES (ORIEL TYPE)

TYPICAL ELEVATIONS

TESTED UNITS

ECO-GUARD SERIES-100
ALUMINUM SINGLE HUNG WINDOW

DESIGN LOAD RATINGS FOR THESE WINDOWS TO BE AS PER CHARTS SHOWN ON SHEETS 2.

APPROVAL APPLIES TO SINGLE UNITS OR SIDE BY SIDE COMBINATIONS OF S.H./S.H. OR SINGLE HUNG WITH OTHER WINDOW TYPES IN MODULES OF TWO OR MORE WINDOWS USING MIAMI-DADE COUNTY APPROVED MULLIONS IN BETWEEN. LOWER DESIGN PRESSURE FROM WINDOWS OR MULLION APPROVAL WILL APPLY TO ENTIRE SYSTEM.

THIS PRODUCT HAS BEEN DESIGNED AND TESTED TO COMPLY WITH THE REQUIREMENTS OF THE FLORIDA BUILDING CODE INCLUDING HIGH VELOCITY HURRICANE ZONE (HVHZ).

WOOD BUCKS BY OTHERS, MUST BE ANCHORED PROPERLY TO TRANSFER LOADS TO THE STRUCTURE.

ANCHORS SHALL BE AS LISTED, SPACED AS SHOWN ON DETAILS, ANCHORS EMBEDMENT TO BASE MATERIAL SHALL BE BEYOND WALL DRESSING OR STUCCO.

ANCHORING OR LOADING CONDITIONS NOT SHOWN IN THESE DETAILS ARE NOT PART OF THIS APPROVAL.

A LOAD DURATION INCREASE IS USED IN DESIGN OF ANCHORS INTO WOOD ONLY.

ALL SHIMS TO BE HIGH IMPACT, NON-METALLIC AND NON-COMPRESSIBLE.

MATERIALS INCLUDING BUT NOT LIMITED TO STEEL/METAL SCREWS, THAT COME INTO CONTACT WITH OTHER DISSIMILAR MATERIALS SHALL MEET THE REQUIREMENTS OF THE FLORIDA BUILDING CODE.

THESE WINDOWS ARE RATED FOR LARGE & SMALL MISSILE IMPACT. SHUTTERS ARE NOT REQUIRED.

PRODUCT REVISED
as complying with the Florida
Building Code
Acceptance No 15-0406.12
Expiration Date 04/08/2019
By Manuel Perez
Miami Dade Product Control

Engr: JAVAD AHMAD
CIVIL
FLA. PE # 70592
C.A.N. 3638
JUN 23 2015

AL-FAROOQ CORPORATION
ENGINEERS & PRODUCT DEVELOPMENT
1235 S.W. 87 AVE
MIAMI, FLORIDA 33174
TEL. (305) 264-8100 FAX. (305) 262-6978

COMP-ANL\W09-08ECO

ECO-GUARD SERIES-100 ALUM S.H. WDW. (L.M.I.)

ECO WINDOW SYSTEMS, LLC.
9114 N.W. 106 STREET
MEDLEY, FL. 33178
TEL. (305) 885-5299 FAX (305) 885-5902

revisions:

no	date	by	description
A	02.15.12		UPDATED TO 2010 FBC
B	01.11.13		MANUF. ADDRESS REV.
C	02.06.14		GLASS & LATCH OPTION ADDED
D	03.18.15		UPDATED TO 2014 FBC
E	06.23.15		REV. PER RER COMMENTS

date: 02-12-09
scale: 1/2"-1'-0"
dr. by: HAMID
chk. by:

drawing no.
W09-08

EQUAL LITES WINDOWS

DESIGN LOAD CAPACITY – PSF

FLANGE DIMS.		GLASS TYPES 'A', 'B' & 'C'	
WIDTH	HEIGHT	EXT.(+)	INT.(–)
19–1/8"	26" (3)	75.0	90.0
24"		75.0	90.0
26–1/2"		75.0	90.0
32"		75.0	90.0
37"		75.0	90.0
40"		75.0	90.0
48"		75.0	90.0
53–1/8"		75.0	90.0
19–1/8"	38–3/8" (4)	75.0	90.0
24"		75.0	90.0
26–1/2"		75.0	90.0
32"		75.0	90.0
37"		75.0	90.0
40"		75.0	90.0
48"		75.0	90.0
53–1/8"		75.0	90.0
19–1/8"	50–5/8" (5)	75.0	90.0
24"		75.0	90.0
26–1/2"		75.0	90.0
32"		75.0	90.0
37"		75.0	90.0
40"		75.0	90.0
48"		75.0	90.0
53–1/8"		75.0	90.0
19–1/8"	63" (6)	75.0	90.0
24"		75.0	90.0
26–1/2"		75.0	90.0
32"		75.0	90.0
37"		75.0	90.0
40"		75.0	90.0
48"		75.0	90.0
53–1/8"		75.0	90.0
19–1/8"	76" (7)	75.0	90.0
24"		75.0	90.0
26–1/2"		75.0	90.0
32"		75.0	90.0
37"		75.0	90.0
40"		75.0	90.0
48"		75.0	90.0
53–1/8"		75.0	90.0

* NO. IN PARENTHESIS INDICATE NO. OF ANCHORS PER JAMB.

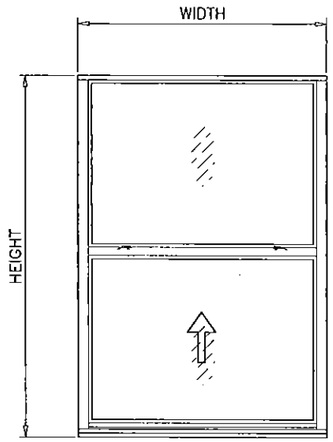

EQUAL LITES

UNEQUAL LITES WINDOWS

DESIGN LOAD CAPACITY – PSF

FLANGE DIMS.		GLASS TYPE 'A'		GLASS TYPES 'B' & 'C'	
WIDTH	HEIGHT	EXT.(+)	INT.(–)	EXT.(+)	INT.(–)
19–1/8"	50–5/8" (5)	75.0	90.0	75.0	90.0
24"		75.0	90.0	75.0	90.0
26–1/2"		75.0	90.0	75.0	90.0
32"		75.0	90.0	75.0	90.0
37"		75.0	90.0	75.0	90.0
40"		75.0	90.0	75.0	90.0
48"		75.0	90.0	75.0	90.0
53–1/8"		75.0	90.0	75.0	90.0
19–1/8"	63" (6)	75.0	90.0	75.0	90.0
24"		75.0	90.0	75.0	90.0
26–1/2"		75.0	90.0	75.0	90.0
32"		75.0	90.0	75.0	90.0
37"		75.0	90.0	75.0	90.0
40"		75.0	90.0	75.0	90.0
48"		–	–	75.0	90.0
53–1/8"		–	–	75.0	90.0
19–1/8"	76" (7)	75.0	90.0	75.0	90.0
24"		75.0	90.0	75.0	90.0
26–1/2"		75.0	90.0	75.0	90.0
32"		75.0	90.0	75.0	90.0
37"		–	–	75.0	90.0
40"		–	–	75.0	90.0
48"		–	–	75.0	90.0
53–1/8"		–	–	75.0	90.0

* NO. IN PARENTHESIS INDICATE NO. OF ANCHORS PER JAMB.

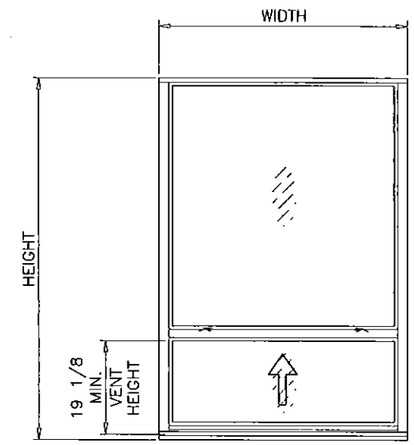

UNEQUAL LITES (ORIEL TYPE)

TO QUALIFY FOR SMALL MISSILE IMPACT RATING
EXTERIOR PLY OF GLASS TYPE 'C' MUST BE TEMPERED.

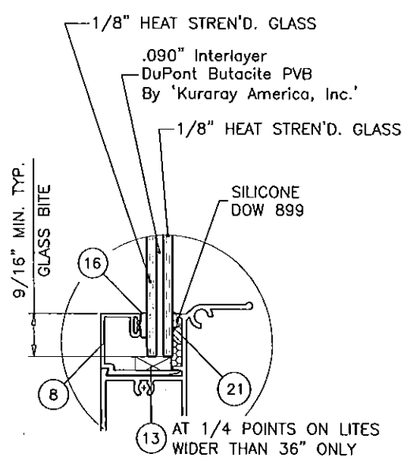

GLASS TYPE 'A'

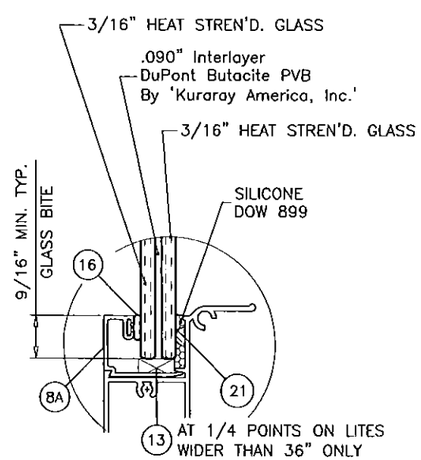

GLASS TYPE 'B'

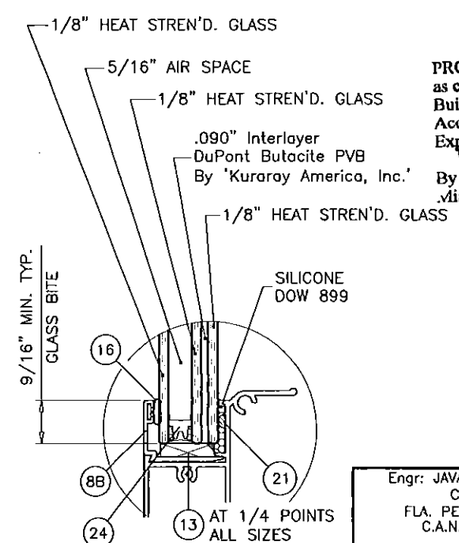

GLASS TYPE 'C'

GLAZING OPTIONS

PRODUCT REVISED
as complying with the Florida
Building Code
Acceptance No 15-0406.12
Expiration Date 04/08/2019
By Manuel Diaz
Miami Dade Product Control

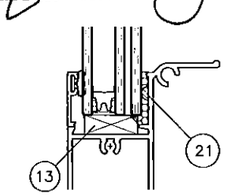

SETTING BLOCKS AT
LAM. GLASS AND INSUL. LAM. GLASS
NOTCH GLAZING BEAD LEG TO CLEAR BLOCKS

Engr: JAVAD AHMAD
CIVIL
FLA. PE # 70592
C.A.N. 3538
JUN 23 2015

NOTE:
GLASS CAPACITIES ON THIS SHEET ARE BASED ON ASTM E1300–09 (3 SEC. GUSTS) AND FLORIDA BUILDING COMMISSION DECLARATORY STATEMENT DCA05–DEC–219

AL-FAROOQ CORPORATION
ENGINEERS & PRODUCT DEVELOPMENT
1235 S.W. 87 AVE
MIAMI, FLORIDA 33174
TEL. (305) 264-8100 FAX. (305) 262-6978
COMP-ANL\W09-08ECO

ECO-GUARD SERIES-100 ALUM S.H. WDW. (L.M.I.)

ECO WINDOW SYSTEMS, LLC.
9114 N.W. 106 STREET
MEDLEY, FL. 33178
TEL. (305) 885-5299 FAX (305) 885-5902

revisions:

no	date	by	description
A	02.15.12		NO CHANGE THIS SHEET
B	01.11.13		MANUF. ADDRESS REV.
C	02.06.14		GLASS & LATCH OPTION ADDED
D	03.18.15		UPDATED TO 2014 FBC
E	06.23.15		REV. PER RER COMMENTS

date: 02-12-09
scale: 1/2" = 1"
dr. by: HAMID
chk. by:

drawing no.
W09-08

MIAMI-DADE COUNTY
DEPARTMENT OF REGULATORY AND ECONOMIC RESOURCES (RER)
BOARD AND CODE ADMINISTRATION DIVISION

MIAMI-DADE COUNTY
PRODUCT CONTROL SECTION
11805 SW 26 Street, Room 208
T (786) 315-2590 F (786) 315-2599
www.miamidade.gov/economy

NOTICE OF ACCEPTANCE (NOA)

Eco Window Systems, LLC
9114 NW 106 Street
Medley, FL 33178

SCOPE:

This NOA is being issued under the applicable rules and regulations governing the use of construction materials. The documentation submitted has been reviewed and accepted by Miami-Dade County RER-Product Control Section to be used in Miami-Dade County and other areas where allowed by the Authority Having Jurisdiction (AHJ).

This NOA shall not be valid after the expiration date stated below. The Miami-Dade County Product Control Section (In Miami-Dade County) and/ or the AHJ (in areas other than Miami-Dade County) reserve the right to have this product or material tested for quality assurance purposes. If this product or material fails to perform in the accepted manner, the manufacturer will incur the expense of such testing and the AHJ may immediately revoke, modify, or suspend the use of such product or material within their jurisdiction. RER reserves the right to revoke this acceptance, if it is determined by Miami-Dade County Product Control Section that this product or material fails to meet the requirements of the applicable building code.

This product is approved as described herein, and has been designed to comply with the Florida Building Code, including the High Velocity Hurricane Zone.

DESCRIPTION: Series "Eco-Guard 500" Outswing Aluminum Casement Window – L.M.I.

APPROVAL DOCUMENT: Drawing No. **W11-05**, titled "S-500 Alum. Outswing Casement Wdw. (L.M.I.)", sheets 1 through 6 of 6, dated 02/23/11, with revision **E** dated 06/23/15, prepared by Al-Farooq Corporation, signed and sealed by Javad Ahmad, P.E., bearing the Miami–Dade County Product Control Revision stamp with the Notice of Acceptance number and expiration date by the Miami-Dade County Product Control Section.

MISSILE IMPACT RATING: Large and Small Missile Impact Resistant

LABELING: Each unit shall bear a permanent label with the manufacturer's name or logo, city, state, series, and following statement: "Miami-Dade County Product Control Approved", unless otherwise noted herein.

RENEWAL of this NOA shall be considered after a renewal application has been filed and there has been no change in the applicable building code negatively affecting the performance of this product.

TERMINATION of this NOA will occur after the expiration date or if there has been a revision or change in the materials, use, and/ or manufacture of the product or process. Misuse of this NOA as an endorsement of any product, for sales, advertising or any other purposes shall automatically terminate this NOA. Failure to comply with any section of this NOA shall be cause for termination and removal of NOA.

ADVERTISEMENT: The NOA number preceded by the words Miami-Dade County, Florida, and followed by the expiration date may be displayed in advertising literature. If any portion of the NOA is displayed, then it shall be done in its entirety.

INSPECTION: A copy of this entire NOA shall be provided to the user by the manufacturer or its distributors and shall be available for inspection at the job site at the request of the Building Official.

This NOA **revises and renews NOA No. 13-0206.07** and consists of this page 1 and evidence pages E-1 and E-2, as well as approval document mentioned above.

The submitted documentation was reviewed by **Manuel Perez, P. E.**

MIAMI-DADE COUNTY APPROVED

MP 6/26/15

NOA No. 15-0406.10
Expiration Date: May 19, 2021
Approval Date: July 02, 2015

ECO-GUARD SERIES-500
ALUMINUM OUTSWING CASEMENT WINDOW

APPROVAL APPLIES TO SINGLE UNITS OR SIDE BY SIDE COMBINATIONS OF CASMT/CASMT OR CASEMENT WITH OTHER WINDOW TYPES IN MODULES OF TWO OR MORE WINDOWS USING MIAMI-DADE COUNTY APPROVED MULLIONS IN BETWEEN. LOWER DESIGN PRESSURE FROM WINDOWS OR MULLION APPROVAL WILL APPLY TO ENTIRE SYSTEM.

THIS PRODUCT HAS BEEN DESIGNED AND TESTED TO COMPLY WITH THE REQUIREMENTS OF THE FLORIDA BUILDING CODE INCLUDING HIGH VELOCITY HURRICANE ZONE (HVHZ).

WOOD BUCKS BY OTHERS, MUST BE ANCHORED PROPERLY TO TRANSFER LOADS TO THE STRUCTURE.

ANCHORS SHALL BE AS LISTED, SPACED AS SHOWN ON DETAILS, ANCHORS EMBEDMENT TO BASE MATERIAL SHALL BE BEYOND WALL DRESSING OR STUCCO.

ANCHORING OR LOADING CONDITIONS NOT SHOWN IN THESE DETAILS ARE NOT PART OF THIS APPROVAL.

A LOAD DURATION INCREASE IS USED IN DESIGN OF ANCHORS INTO WOOD ONLY.

ALL SHIMS TO BE HIGH IMPACT, NON-METALLIC AND NON-COMPRESSIBLE.

MATERIALS INCLUDING BUT NOT LIMITED TO STEEL/METAL SCREWS, THAT COME INTO CONTACT WITH OTHER DISSIMILAR MATERIALS SHALL MEET THE REQUIREMENTS OF THE FLORIDA BUILDING CODE.

THESE WINDOWS ARE RATED FOR LARGE & SMALL MISSILE IMPACT. SHUTTERS ARE NOT REQUIRED.

MAXIMUM DESIGN LOAD RATING = + 70.0 PSF
(FOR SIZES SHOWN OR SMALLER) − 75.0 PSF

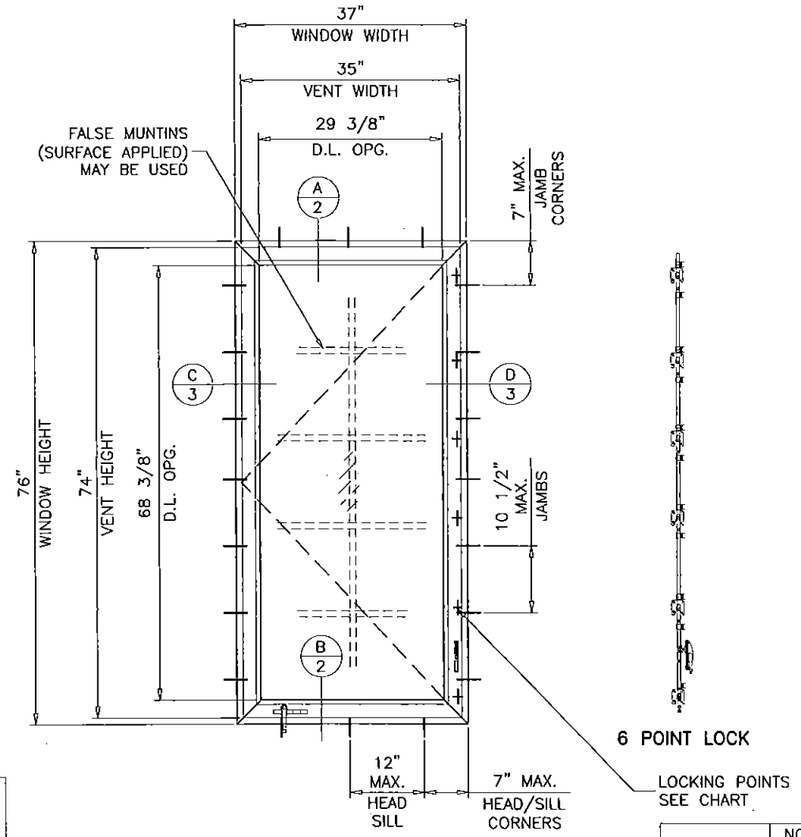

TYPICAL ELEVATION

WDW. HEIGHT UPTO	NO. OF KEEPERS AT SASH
26"	2
38-3/8"	3
50-5/8"	4
63"	5
76"	6

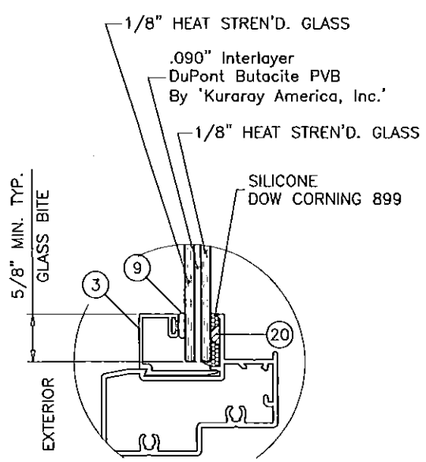

GLASS TYPE 'A'

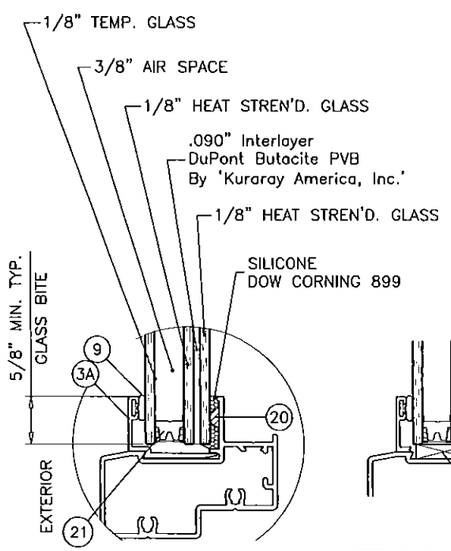

GLASS TYPE 'AA'

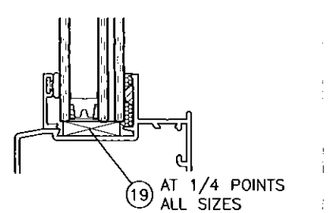

SETTING BLOCKS AT INSUL. LAM. GLASS NOTCH GLAZING BEAD LEG TO CLEAR BLOCKS

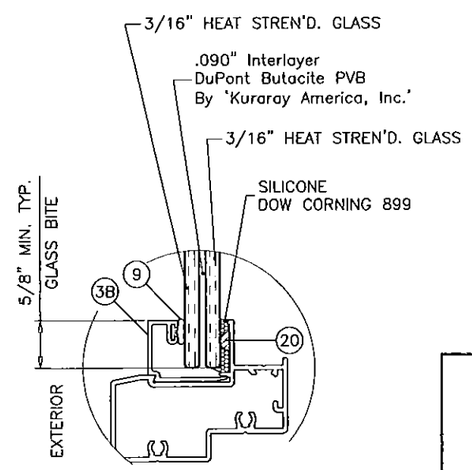

GLASS TYPE 'B'

GLAZING OPTIONS

PRODUCT REVISED
as complying with the Florida
Building Code
Acceptance No 15-0406.10
Expiration Date 05/19/2021
By Manuel Perez
Miami-Dade Product Control

NOTE:
GLASS CAPACITIES ON THIS SHEET ARE BASED ON ASTM E1300-09 (3 SEC. GUSTS) AND FLORIDA BUILDING COMMISSION DECLARATORY STATEMENT DCA05-DEC-219

Engr: JAVAD AHMAD
CIVIL
FLA. PE # 70592
C.A.N. 3538
JUN 23 2015

AL-FAROOQ CORPORATION
ENGINEERS & PRODUCT DEVELOPMENT
1235 S.W. 87 AVE
MIAMI, FLORIDA 33174
TEL. (305) 264-8100 FAX. (305) 262-6978

COMP-ANL\W11-05ECO

S-500 ALUM OUTSWING CASEMENT WDW. (L.M.I.)

ECO WINDOW SYSTEMS, LLC.
9114 N.W. 106 STREET
MEDLEY, FL. 33178
TEL. (305) 885-5299 FAX (305) 885-5902

revisions:

no	date	by	description
A	04.27.11		NO CHANGE THIS SHEET
B	01.31.12		UPDATED TO 2010 FBC
C	01.11.13		MANUF. ADDRESS REV.
D	03.19.15		UPDATED TO 2014 FBC
E	06.23.15		REV. PER RER COMMENTS

date: 02-23-11
scale: 1/2"=1'-0"
dr. by: HAMID
chk. by:

drawing no.
W11-05

MIAMI-DADE COUNTY
DEPARTMENT OF REGULATORY AND ECONOMIC RESOURCES (RER)
BOARD AND CODE ADMINISTRATION DIVISION

MIAMI-DADE COUNTY
PRODUCT CONTROL SECTION
11805 SW 26 Street, Room 208
T (786) 315-2590 F (786) 315-2599
www.miamidade.gov/economy

NOTICE OF ACCEPTANCE (NOA)

Eco Window Systems, LLC
9114 NW 106 Street
Medley, FL 33178

SCOPE:

This NOA is being issued under the applicable rules and regulations governing the use of construction materials. The documentation submitted has been reviewed and accepted by Miami-Dade County RER-Product Control Section to be used in Miami-Dade County and other areas where allowed by the Authority Having Jurisdiction (AHJ).

This NOA shall not be valid after the expiration date stated below. The Miami-Dade County Product Control Section (In Miami-Dade County) and/ or the AHJ (in areas other than Miami-Dade County) reserve the right to have this product or material tested for quality assurance purposes. If this product or material fails to perform in the accepted manner, the manufacturer will incur the expense of such testing and the AHJ may immediately revoke, modify, or suspend the use of such product or material within their jurisdiction. RER reserves the right to revoke this acceptance, if it is determined by Miami-Dade County Product Control Section that this product or material fails to meet the requirements of the applicable building code.

This product is approved as described herein, and has been designed to comply with the Florida Building Code, including the High Velocity Hurricane Zone.

DESCRIPTION: Series "Eco-Guard 550" Aluminum Fixed Window – L.M.I.

APPROVAL DOCUMENT: Drawing No. **W11-10**, titled "S-550 Aluminum Fixed Window (L.M.I.)", sheets 1 through 6 of 6, dated 02/28/11, with revision **D** dated 06/23/15, prepared by Al-Farooq Corporation, signed and sealed by Javad Ahmad, P.E., bearing the Miami-Dade County Product Control Revision stamp with the Notice of Acceptance number and expiration date by the Miami-Dade County Product Control Section.

MISSILE IMPACT RATING: Large and Small Missile Impact Resistant

LABELING: Each unit shall bear a permanent label with the manufacturer's name or logo, city, state, series, and following statement: "Miami-Dade County Product Control Approved", unless otherwise noted herein.

RENEWAL of this NOA shall be considered after a renewal application has been filed and there has been no change in the applicable building code negatively affecting the performance of this product.

TERMINATION of this NOA will occur after the expiration date or if there has been a revision or change in the materials, use, and/ or manufacture of the product or process. Misuse of this NOA as an endorsement of any product, for sales, advertising or any other purposes shall automatically terminate this NOA. Failure to comply with any section of this NOA shall be cause for termination and removal of NOA.

ADVERTISEMENT: The NOA number preceded by the words Miami-Dade County, Florida, and followed by the expiration date may be displayed in advertising literature. If any portion of the NOA is displayed, then it shall be done in its entirety.

INSPECTION: A copy of this entire NOA shall be provided to the user by the manufacturer or its distributors and shall be available for inspection at the job site at the request of the Building Official.

This NOA **revises and renews NOA No. 13-0206.08** and consists of this page 1 and evidence pages E-1 and E-2, as well as approval document mentioned above.

The submitted documentation was reviewed by **Manuel Perez, P.E.**

MIAMI-DADE COUNTY APPROVED

6/26/15

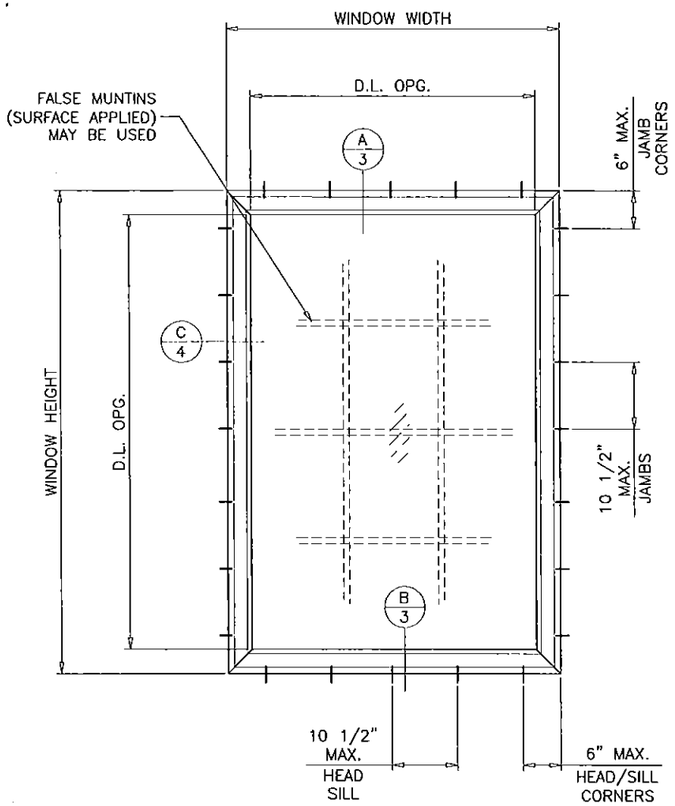

TYPICAL ELEVATION

THESE WINDOWS ARE RATED FOR LARGE & SMALL MISSILE IMPACT.
SHUTTERS ARE NOT REQUIRED.

ECO-GUARD SERIES-550
ALUMINUM FIXED WINDOW

DESIGN LOAD RATINGS FOR THESE WINDOWS TO BE AS PER CHARTS SHOWN ON SHEETS 2.

APPROVAL APPLIES TO SINGLE UNITS OR SIDE BY SIDE COMBINATIONS OF FIX./FIX. OR FIXED WITH OTHER WINDOW TYPES IN MODULES OF TWO OR MORE WINDOWS USING MIAMI-DADE COUNTY APPROVED MULLIONS IN BETWEEN. LOWER DESIGN PRESSURE FROM WINDOWS OR MULLION APPROVAL WILL APPLY TO ENTIRE SYSTEM.

THIS PRODUCT HAS BEEN DESIGNED AND TESTED TO COMPLY WITH THE REQUIREMENTS OF THE FLORIDA BUILDING CODE INCLUDING HIGH VELOCITY HURRICANE ZONE (HVHZ).

WOOD BUCKS BY OTHERS, MUST BE ANCHORED PROPERLY TO TRANSFER LOADS TO THE STRUCTURE.

ANCHORS SHALL BE AS LISTED, SPACED AS SHOWN ON DETAILS, ANCHORS EMBEDMENT TO BASE MATERIAL SHALL BE BEYOND WALL DRESSING OR STUCCO.

ANCHORING OR LOADING CONDITIONS NOT SHOWN IN THESE DETAILS ARE NOT PART OF THIS APPROVAL.

A LOAD DURATION INCREASE IS USED IN DESIGN OF ANCHORS INTO WOOD ONLY.

ALL SHIMS TO BE HIGH IMPACT, NON-METALLIC AND NON-COMPRESSIBLE.

MATERIALS INCLUDING BUT NOT LIMITED TO STEEL/METAL SCREWS, THAT COME INTO CONTACT WITH OTHER DISSIMILAR MATERIALS SHALL MEET THE REQUIREMENTS OF THE FLORIDA BUILDING CODE.

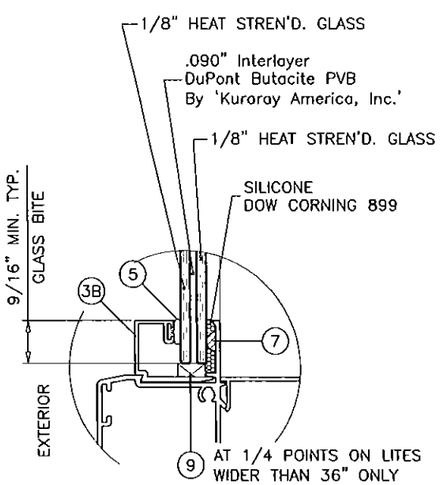

GLASS TYPE 'A'

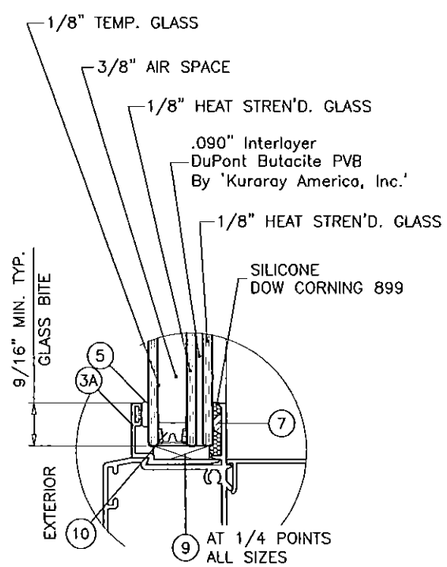

GLASS TYPE 'AA'

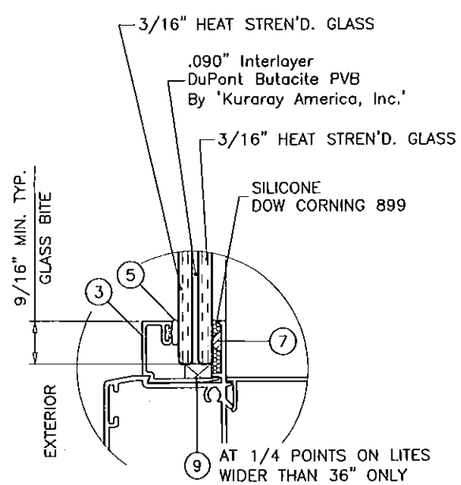

GLASS TYPE 'B'

GLAZING OPTIONS

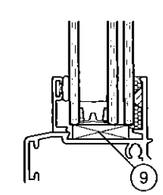

SETTING BLOCKS AT
LAM. GLASS AND INSUL. LAM. GLASS
NOTCH GLAZING BEAD LEG TO CLEAR BLOCKS

PRODUCT REVISED
as complying with the Florida
Building Code
Acceptance No 15-0406.11
Expiration Date 05/05/2021
By Manuel Perez
Miami Dade Product Control

Engr: JAVAD AHMAD
CIVIL
FLA. PE # 70592
C.A.N. 3538
JUN 23 2015

AL-FAROOQ CORPORATION
ENGINEERS & PRODUCT DEVELOPMENT
1235 S.W. 87 AVE
MIAMI, FLORIDA 33174
TEL. (305) 264-8100 FAX. (305) 262-6978

COMP-ANL\W11-10ECO

S-550 ALUMINUM FIXED WINDOW (L.M.I.)

ECO WINDOW SYSTEMS, LLC.
9114 N.W. 106 STREET
MEDLEY, FL. 33178
TEL. (305) 885-5299 FAX (305) 885-5902

revisions:

no	date	by	description
A	01.30.12		UPDATED TO 2010 FBC
B	01.11.13		MANUF. ADDRESS REV.
C	03.19.15		UPDATED TO 2014 FBC
D	06.23.15		REV. PER RER COMMENTS

date: 02-28-11
scale: 1/2"=1'-0"
dr. by: HAMID
chk. by:

drawing no.
W11-10

MIAMI-DADE COUNTY
DEPARTMENT OF REGULATORY AND ECONOMIC RESOURCES (RER)
BOARD AND CODE ADMINISTRATION DIVISION

MIAMI-DADE COUNTY
PRODUCT CONTROL SECTION
11805 SW 26 Street, Room 208
T (786) 315-2590 F (786) 315-2599
www.miamidade.gov/economy

NOTICE OF ACCEPTANCE (NOA)

PGT Industries, Inc.
1070 Technology Drive
North Venice, FL 34275

SCOPE:

This NOA is being issued under the applicable rules and regulations governing the use of construction materials. The documentation submitted has been reviewed and accepted by Miami-Dade County RER - Product Control Section to be used in Miami Dade County and other areas where allowed by the Authority Having Jurisdiction (AHJ).

This NOA shall not be valid after the expiration date stated below. The Miami-Dade County Product Control Section (In Miami-Dade County) and/or the AHJ (in areas other than Miami-Dade County) reserve the right to have this product or material tested for quality assurance purposes. If this product or material fails to perform in the accepted manner, the manufacturer will incur the expense of such testing and the AHJ may immediately revoke, modify, or suspend the use of such product or material within their jurisdiction. RER reserves the right to revoke this acceptance, if it is determined by Miami–Dade County Product Control Section that this product or material fails to meet the requirements of the applicable building code.

This product is approved as described herein, and has been designed to comply with the Florida Building Code, including the High Velocity Hurricane Zone.-

DESCRIPTION: Series "PGT" Clipped Extruded Aluminum Tube Mullion – L.M.I.

APPROVAL DOCUMENT: Drawing No. **6300JR**, titled "Impact–Resistant Aluminum Tube Mullions", sheets 1 through 25 of 25, prepared by manufacturer, dated 08/29/11, with revision B dated 10/10/14, signed and sealed by Anthony Lynn Miller, P.E., bearing the Miami-Dade County Product Control Revision stamp with the Notice of Acceptance number and expiration date by the Miami-Dade County Product Control Section.

LABELING: Each unit shall bear a permanent label with the manufacturer's name or logo, city, state, model/series, and following statement: "Miami-Dade County Product Control Approved", unless otherwise noted herein.

RENEWAL of this NOA shall be considered after a renewal application has been filed and there has been no change in the applicable building code negatively affecting the performance of this product.

TERMINATION of this NOA will occur after the expiration date or if there has been a revision or change in the materials, use, and/or manufacture of the product or process. Misuse of this NOA as an endorsement of any product, for sales, advertising or any other purposes shall automatically terminate this NOA. Failure to comply with any section of this NOA shall be cause for termination and removal of NOA.

ADVERTISEMENT: The NOA number preceded by the words Miami-Dade County, Florida, and followed by the expiration date may be displayed in advertising literature. If any portion of the NOA is displayed, then it shall be done in its entirety.

INSPECTION: A copy of this entire NOA shall be provided to the user by the manufacturer or its distributors and shall be available for inspection at the job site at the request of the Building Official.

This NOA **revises and renews NOA# 14-1105.01** and consists of this page 1 and evidence pages E-1 and E-2, as well as approval document mentioned above.

The submitted documentation was reviewed by **Manuel Perez, P.E.**

MIAMI-DADE COUNTY APPROVED

4/11/16

SUITABLE FOR ALL LOCATIONS REQUIRING NON-IMPACT OR LARGE AND SMALL MISSILE IMPACT-RESISTANT PRODUCTS

FIGURE 1:
MULTIPLE MULLIONS

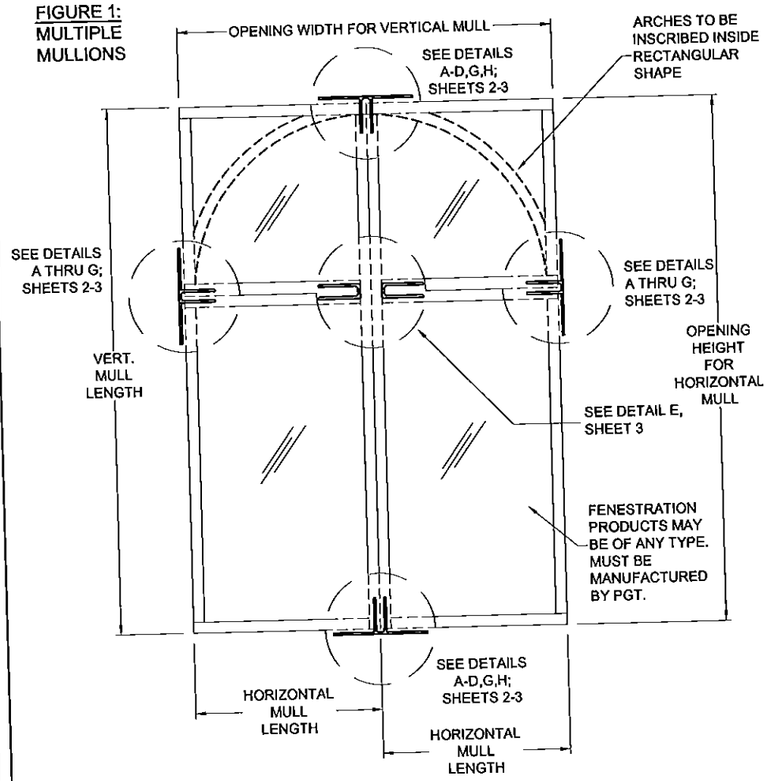

ADDITIONAL EXAMPLES OF MULL CONFIGURATIONS:

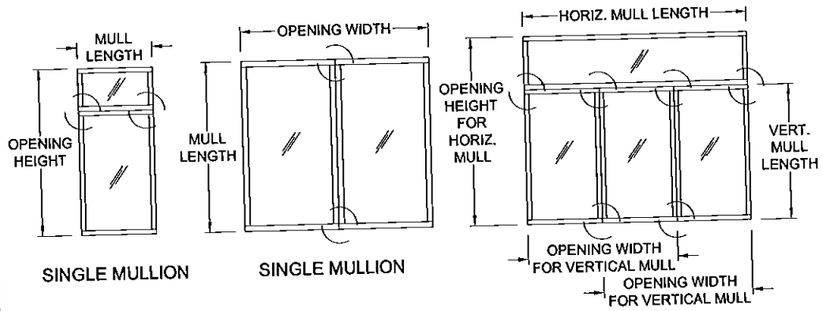

SINGLE MULLION

SINGLE MULLION

MULTIPLE MULLIONS

SEE CORRESPONDING DETAILS FROM FIGURE 1 ABOVE.

STANDARDS USED:

- 2014 FLORIDA BUILDING CODE (FBC), 5TH EDITION
- ANSI/AF&PA NDS-2012 FOR WOOD CONSTRUCTION
- ALUMINUM DESIGN MANUAL, ADM-2010
- AISI-S100-07/S2-2010

GENERAL NOTES:

1) DETAILS SHOWN ARE FOR THE MULLION ONLY. ANCHORS SHOWN ARE IN ADDITION TO ANY ANCHORS REQUIRED FOR THE FENESTRATION PRODUCT INSTALLATION. TYPICAL APPLICATIONS ARE SHOWN. EACH SITUATION IS UNIQUE AND SHOULD BE EVALUATED BY AN EXPERIENCED INSTALLER FOR THE BEST INSTALLATION METHOD. OPTIONAL 1X OR 2X WOOD BUCKS IF USED, MUST BE ANCHORED PROPERLY TO TRANSFER LOADS AND ARE TO BE DESIGNED BY OTHERS.

2) THE TYPE AND NUMBER OF ANCHORS IS CRITICAL TO THE STRUCTURAL PERFORMANCE OF THE MULLED UNITS. MULLIONS HAVE BEEN TESTED AS "FREE-FLOATING" AND DO NOT NEED TO BE DIRECTLY ATTACHED TO THE MULLION CLIPS, BUT SHALL NOT HAVE A GAP OF MORE THAN 1/4" FROM THE CLIP.

3) THE ANCHORAGE METHODS SHOWN HAVE BEEN DESIGNED TO RESIST THE WINDLOADS CORRESPONDING TO THE REQUIRED DESIGN PRESSURE. MULLIONS ARE CALCULATED TO DEFLECT NO MORE THAN L/180. THE 1/3 STRESS INCREASE WAS NOT USED IN THIS ANCHOR EVALUATION. THE 1.6 LOAD DURATION FACTOR WAS USED FOR THE EVALUATION OF WOOD SCREWS.

4) PROPER SEALING OF ENTIRE ASSEMBLY IS THE RESPONSIBILITY OF OTHERS AND IS BEYOND THE SCOPE OF THESE INSTRUCTIONS.

5) USE THE COMBINED WIDTH OR HEIGHT OF ONLY TWO ADJACENT FENESTRATION PRODUCTS TO DETERMINE PRESSURES AND ANCHORAGE FOR THE COMMON MULLION, SEE EXAMPLES ON THIS SHEET AND SHEET 24. FOR MULTIPLE UNITS, CONSIDER ONLY TWO ADJACENT UNITS AT A TIME WHEN USING THE DESIGN PRESSURE AND ANCHORAGE TABLES. THE LOWEST DESIGN PRESSURE OF MULTIPLE MULLIONS OR FENESTRATION PRODUCTS SHALL APPLY.

6) WHEN FINDING YOUR SIZE IN THE MULLION TABLES, ALWAYS ROUND UP TO THE NEXT SIZE SHOWN ON THE TABLE(S).

7) ANCHOR EMBEDMENT TO BASE MATERIAL SHALL BE BEYOND WALL DRESSING OR STUCCO. WOOD BUCKS BY OTHERS, MUST BE ANCHORED PROPERLY TO TRANSFER LOADS TO THE STRUCTURE. ANCHORS SHALL BE COATED OR CORROSION RESISTANT AS APPROPRIATE FOR SUBSTRATE MATERIAL. DISSIMILAR MATERIALS SHALL BE PROTECTED AS REQUIRED TO PREVENT REACTIONS.

8) REFERENCE: TEST REPORTS: FTL-6443; ELCO ULTRACON/AGGRE-GATOR NOA'S

9) MULLIONS AND CLIPS HAVE BEEN DESIGNED & TESTED TO COMPLY WITH THE REQUIREMENTS OF THE FLORIDA BUILDING CODE, AND ARE APPROVED FOR IMPACT AND NON-IMPACT APPLICATIONS. MULLIONS ARE ONLY TO BE USED WITH PGT-APPROVED FENESTRATION PRODUCTS HAVING CURRENT APPROVALS.

10) MULLIONS ARE IN COMPLIANCE FOR USE IN THE HVHZ.

11) QUANTITY OF UNITS WITHIN A MULTIPLE MULLED ASSEMBLY IS UNLIMITED PROVIDED THAT THE SPAN AND OPENING WIDTH/HEIGHT OF EACH INDIVIDUAL MULLION COMPLIES WITH THE REQUIREMENTS OF THIS NOA.

INSTRUCTIONS:

1) DETERMINE THE DESIGN PRESSURE REQUIREMENT (LBS/FT²) FOR THE OPENING USING THE **ASCE-7 STANDARD**.

2) CHOOSE A MULLION TYPE THAT WILL FIT THE DEPTH OF THE FENESTRATION PRODUCT'S FRAME DEPTH.

3) REFER TO SHEET 25 TO DETERMINE IF THE WIND LOADING IS "RECTANGULAR" OR "TRIANGULAR/TRAPEZOIDAL".

4) FIND THE CHOSEN MULLION'S MULLION CAPACITY (LBS/FT²) FROM TABLES 1A THROUGH 16A, ON SHEETS 5 THROUGH 20 RESPECTIVELY, USING THE MULLION TYPE, LENGTH AND OPENING WIDTH OR HEIGHT (DEPENDING IF THE MULLION IS SPANNING VERTICALLY OR HORIZONTALLY). THE MULLION CAPACITY (LBS/FT²) OBTAINED SHALL MEET OR EXCEED THE DESIGN PRESSURE REQUIREMENT (LBS/FT²) FOR THE OPENING OBTAINED IN STEP 1).

5) FROM THE SAME TABLE USED IN STEP 4) ABOVE, FIND THE VALUE IN THE NEXT COLUMN ANCHOR CAPACITY REQUIRED (LBS). THIS VALUE REPRESENTS THE WINDLOAD TRANSFERRED TO THE SUBSTRATE BY THE ANCHORS AND MUST BE MET TO ATTAIN THE FULL MULLION CAPACITY.

6) FROM THE ANCHOR CAPACITY (LBS) TABLE ON THE SAME SHEET AND USING YOUR ACTUAL SUBSTRATE CONDITION (MULTIPLE ANCHOR/SUBSTRATE/ANCHOR-CLIP PATTERN MAY APPLY) SELECT AN ANCHOR CLIP PATTERN AND VERIFY THAT THE REQUIRED ANCHOR CAPACITY IS MET.

7) IF THE MULLION CAPACITY (LBS/FT²) OBTAINED IN THE TABLE IS HIGHER THAN THE DESIGN PRESSURE REQUIREMENT (LBS/FT²) FOR THE OPENING, YOU MAY USE THE **"ANCHOR CAPACITY ADJUSTMENT FORMULA"** TO OBTAIN THE LOWER ANCHOR CAPACITY REQUIRED. WITH THIS VALUE A LOWER ANCHOR CAPACITY OPTION MAY BE SELECTED FOR THE SAME SUBSTRATE

8) VERIFY THE DESIGN PRESSURE RATING (LBS/FT²) FOR THE FENESTRATION PRODUCT TO BE USED AND COMPARE WITH THE FINAL MULLION CAPACITY (LBS/FT²) OBTAINED FOR THE MULLION SYSTEM. THE LOWER OF THE TWO SHALL APPLY FOR THE ENTIRE MULLED FENESTRATION PRODUCT ASSEMBLY.

9) HIGHLIGHT OPTION USED AND TABLE VALUES USED IN A SPECIFIC APPLICATION WHEN USING THIS NOA TO APPLY FOR A PERMIT.

GENERAL NOTES..... 1
INSTRUCTIONS..... 1
ELEVATIONS..... 1
MULL TO 2X WOOD..... 2
MULL TO 1X & MASONRY..... 2
INSTALLATION NOTES..... 2
MULL TO MASONRY..... 3
MULL TO STEEL STUD..... 3
MULL TO MULL..... 3
ANCHOR SPECS..... 3
ALTERNATATE CLIPS..... 4
BAY MULL INSTALLATION..... 4
1 X 2 X .125 MULL SPECS..... 5
1 X 2 X .375 MULL SPECS..... 6
1 X 2.75 X .375 MULL SPECS..... 7
1 X 2.75 X .65 MULL SPECS..... 8
1 X 3.125 X .500 MULL SPECS..... 9
1 X 4 X .125 MULL SPECS..... 10
1 X 4 X .375 TUBE MULL SPECS.... 11
1 X 4 X .375 "T" MULL SPECS..... 11
1.25 X 3.188 X .265 MULL SPECS... 12
1.25 X 3.25 X .100 MULL SPECS..... 13
1.25 X 3.25 X .624 MULL SPECS..... 14
1.25 X 3.94 X .624 MULL SPECS..... 15
2 X 4 X .25 MULL SPECS..... 16
2 X 6 X .25 MULL SPECS..... 17
1.26 X 2.11 X .125 MULL SPECS.... 18
30° X 3.25 BAY MULL SPECS..... 19
45° X 3.25 BAY MULL SPECS..... 20
MULLION & CLIP DIMENSIONS..... 21-23
EXAMPLES 1 & 2..... 24
LOADING EXAMPLES..... 25

PGT®
1070 TECHNOLOGY DRIVE
N. VENICE, FL 34275
P.O. BOX 1529
NOKOMIS, FL 34274
FL CERT. OF AUTH.# 29296

Title: IMPACT-RESISTANT ALUMINUM TUBE MULLIONS
Description: GENERAL NOTES AND ELEVATION
Series: N/A | Scale: N/A | Drawing No. 6300JR | Sheet: 1 of 25
Drawn By: J ROSOWSKI | Date: 08/29/11 | Checked By: | Date: | Rev. B
Rev. By: J ROSOWSKI | Date: 10/10/14 | Revision: NEW MULLS TO SHEETSET

PRODUCT REVISED
as complying with the Florida Building Code
Acceptance No 16-0218.
Expiration Date May 26, 2021
By Manuel Perez
Miami/Dade Product Control

ANTHONY LYNN MILLER
LICENSE
No. 58705
STATE OF FLORIDA
PROFESSIONAL ENGINEER
A. LYNN MILLER P.E.
FL P.E.# 58705

DETAIL A:
MULLION TO 2X WOOD BUCK OR WOOD FRAMING (OFFSET CLIP SHOWN)

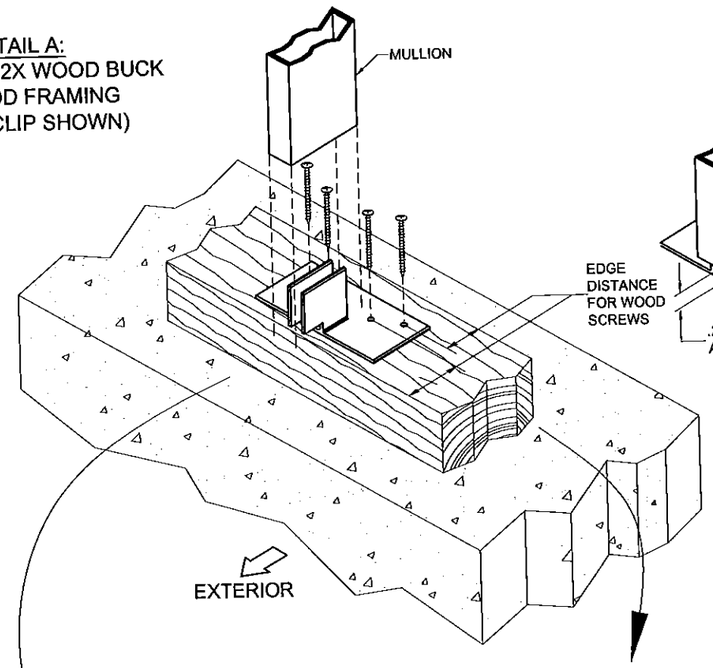

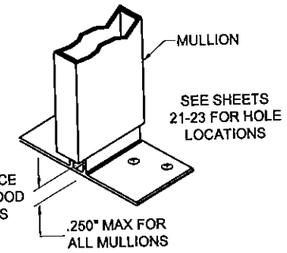

THE OFFSET CLIP IS RECOMMENDED FOR FIN-FRAMED WINDOWS, BUT MAY ALSO BE USED FOR OTHER FRAME TYPES.

DETAIL B:
MULLION ATTACHED TO 1X WOOD BUCK AND MASONRY (STANDARD CLIP SHOWN)

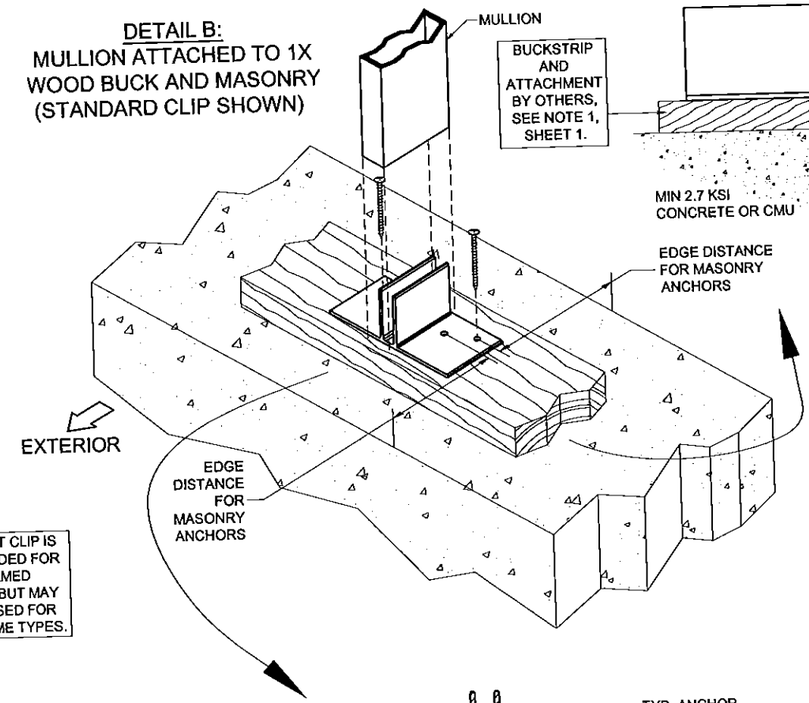

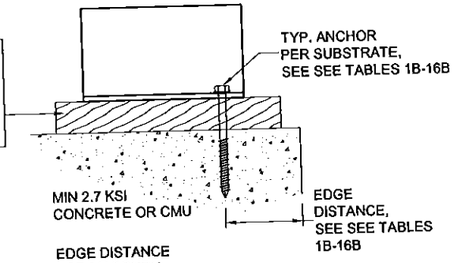

SIDE VIEW

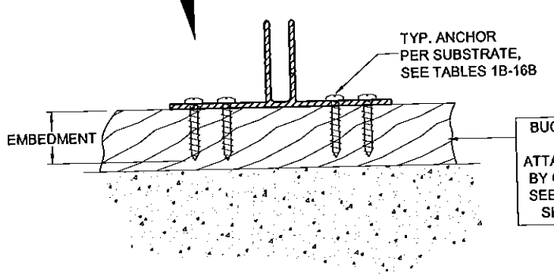

FRONT VIEW

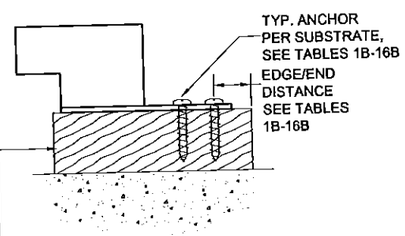

SIDE VIEW

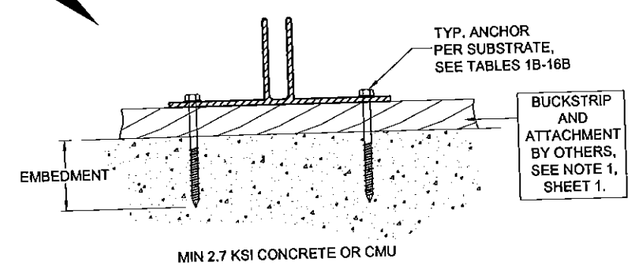

FRONT VIEW

INSTALLATION NOTES:

1) ANCHOR EMBEDMENT TO BASE MATERIAL SHALL BE BEYOND WALL DRESSING OR STUCCO.

2) QUANTITY OF ANCHORS AND MULLION SIZE SHOWN ABOVE ARE FOR PICTORIAL REPRESENTATION ONLY. BECAUSE THE ANCHOR CAPACITY IS BASED PARTLY ON THE ANCHOR TO ANCHOR DISTANCE, THE CORRECT QUANTITY AND LOCATION OF ANCHORS MUST BE FOLLOWED, REFER TO THE TABLES ON THE FOLLOWING SHEETS. FOR DETAILS A-D, EITHER THE STANDARD OR INTERIOR CLIP MAY BE USED.

3) ANCHOR HEAD TYPE MAY BE PANHEAD, HEXHEAD OR FLATHEAD.

4) WOOD BUCKS ARE OPTIONAL, SEE DETAIL C, SHEET 3.

5) FOR MASONRY APPLICATIONS IN MIAMI-DADE COUNTY, USE ONLY MIAMI-DADE COUNTY APPROVED ELCO ULTRACON OR ELCO 1/4" S.S. AGGREGATOR MASONRY ANCHORS.

PGT®
1070 TECHNOLOGY DRIVE
N. VENICE, FL 34275
P.O. BOX 1529
NOKOMIS, FL 34274
FL CERT. OF AUTH.# 29296

Title: IMPACT-RESISTANT ALUMINUM TUBE MULLIONS
Description: INSTALLATION INSTRUCTIONS A
Series: N/A
Drawing No. 6300JR
Sheet: 2 of 25
Rev. B
Scale: N/A
Date:
Checked By:
Drawn By: J ROSOWSKI
Date: 08/29/11
Rev. By: J ROSOWSKI
Date: 10/10/14
Revision: NEW MULLS TO SHEETSET

PRODUCT REVISED
as complying with the Florida Building Code
Acceptance No K-0218.03
Expiration Date May 26, 2021
By Manuel Diaz
Miami Dade Product Control

ANTHONY LYNN MILLER
LICENSE
No. 58705
4/8/16
STATE OF FLORIDA
PROFESSIONAL ENGINEER

A. LYNN MILLER, P.E.
FL P.E.# 58705

DETAIL C:
MULLION DIRECTLY ATTACHED TO MASONRY STRUCTURE (STANDARD CLIP SHOWN)

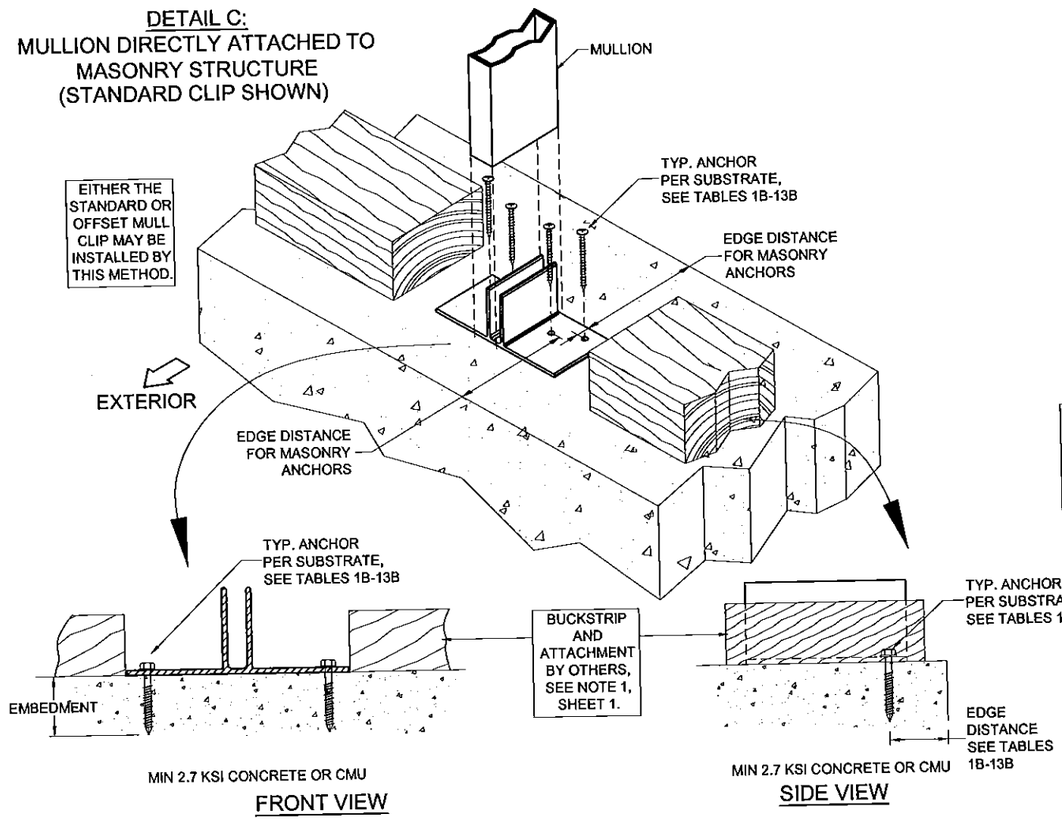

THE OFFSET CLIP IS RECOMMENDED FOR FIN-FRAMED WINDOWS, BUT MAY ALSO BE USED FOR OTHER FRAME TYPES.

DETAIL E:
MULLION TO MULLION INTERSECTION (U-CLIP)

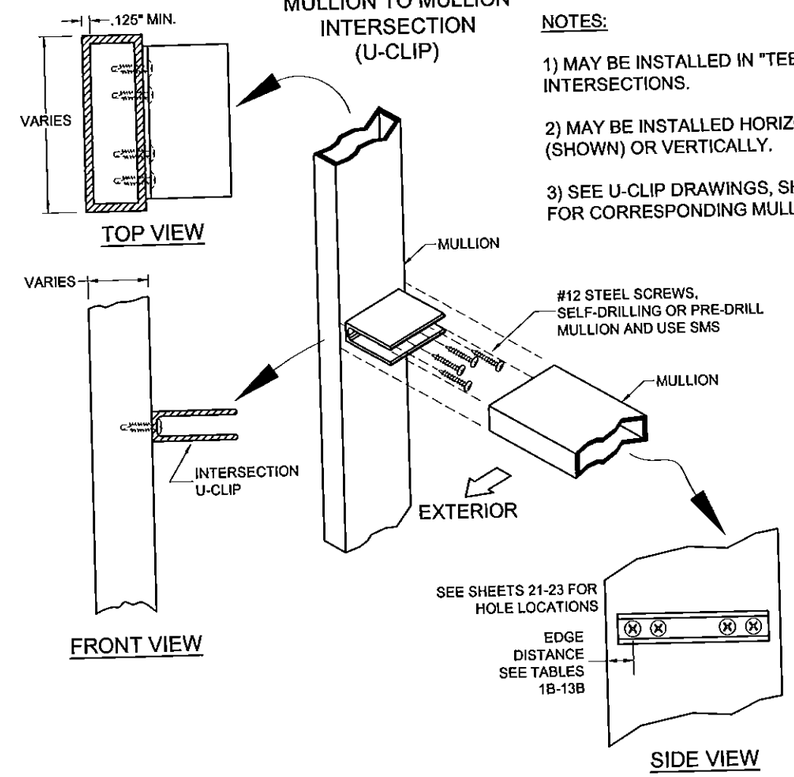

NOTES:

1) MAY BE INSTALLED IN "TEE" OR "CROSS" INTERSECTIONS.

2) MAY BE INSTALLED HORIZONTALLY (SHOWN) OR VERTICALLY.

3) SEE U-CLIP DRAWINGS, SHEETS 21-23 FOR CORRESPONDING MULLION.

DETAIL D:
MULLION ATTACHED TO STEEL STUD (STANDARD CLIP SHOWN)

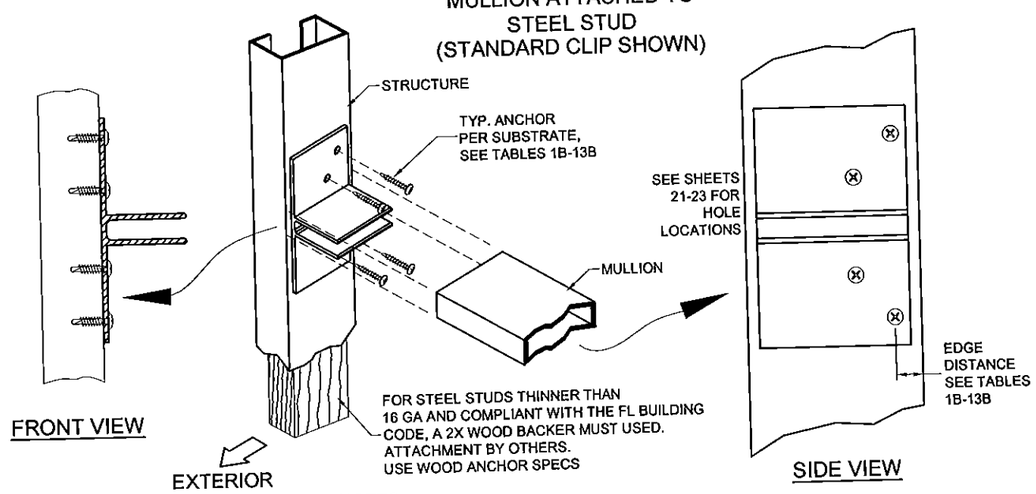

NOTES:

1) FOR 2X WOOD-BACKED STEEL STUDS, WOOD ANCHOR VALUES MAY BE USED.

2) SEE CORRESPONDING MULLION TABLES, SHEETS 5-20, FOR QUANTITY OF SCREWS.

INSTALLATION NOTES:

1) ANCHOR EMBEDMENT TO BASE MATERIAL SHALL BE BEYOND WALL DRESSING OR STUCCO.

2) QUANTITY OF ANCHORS AND MULLION SIZE SHOWN ABOVE ARE FOR PICTORIAL REPRESENTATION ONLY. BECAUSE THE ANCHOR CAPACITY IS BASED PARTLY ON THE ANCHOR TO ANCHOR DISTANCE, THE CORRECT QUANTITY AND LOCATION OF ANCHORS MUST BE FOLLOWED, REFER TO THE TABLES ON THE FOLLOWING SHEETS. FOR DETAILS A-D, EITHER THE STANDARD OR INTERIOR CLIP MAY BE USED.

3) ANCHOR HEAD TYPE MAY BE PANHEAD, HEXHEAD OR FLATHEAD.

4) WOOD BUCKS ARE OPTIONAL, SEE DETAIL C, SHEET 3.

5) FOR MASONRY APPLICATIONS IN MIAMI-DADE COUNTY, USE ONLY MIAMI-DADE COUNTY APPROVED ELCO ULTRACON OR ELCO 1/4" S.S. AGGREGATOR MASONRY ANCHORS.

PCI®
1070 TECHNOLOGY DRIVE
N. VENICE, FL 34275
P.O. BOX 1529
NOKOMIS, FL 34274
FL CERT. OF AUTH.# 29296

Title:	IMPACT-RESISTANT ALUMINUM TUBE MULLIONS
Description:	INSTALLATION INSTRUCTIONS B
Series:	N/A
Scale:	N/A
Drawing No.	6300JR
Sheet:	3 of 25
Rev:	B
Drawn By:	J ROSOWSKI
Date:	08/29/11
Checked By:	
Date:	
Rev. By:	J ROSOWSKI
Date:	10/10/14
Revision:	NEW MULLS TO SHEETSET

PRODUCT REVISED
as complying with the Florida Building Code
Acceptance No 16-0218.03
Expiration Date May 26, 2021
By Manuel Perez
Miami-Dade Product Control

ANTHONY LYNN MILLER
LICENSE
No. 58705
4/8/16
STATE OF FLORIDA
PROFESSIONAL ENGINEER

A. LYNN MILLER, P.E.
FL P.E.# 58705

DETAIL F:
FIELD-MODIFIED MULLION CLIP
(F-CLIP)

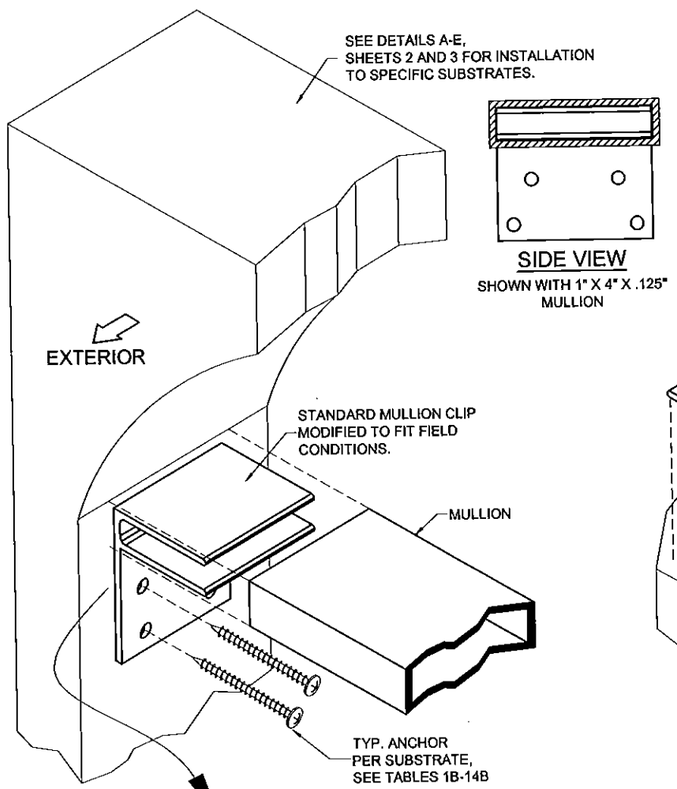

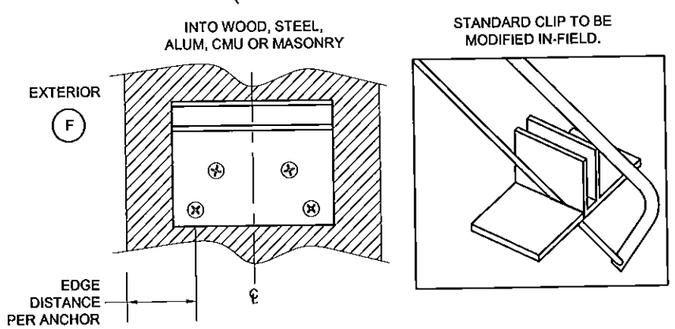

DETAIL G:
ANGLE MULLION CLIP
(ANGLE CLIP)

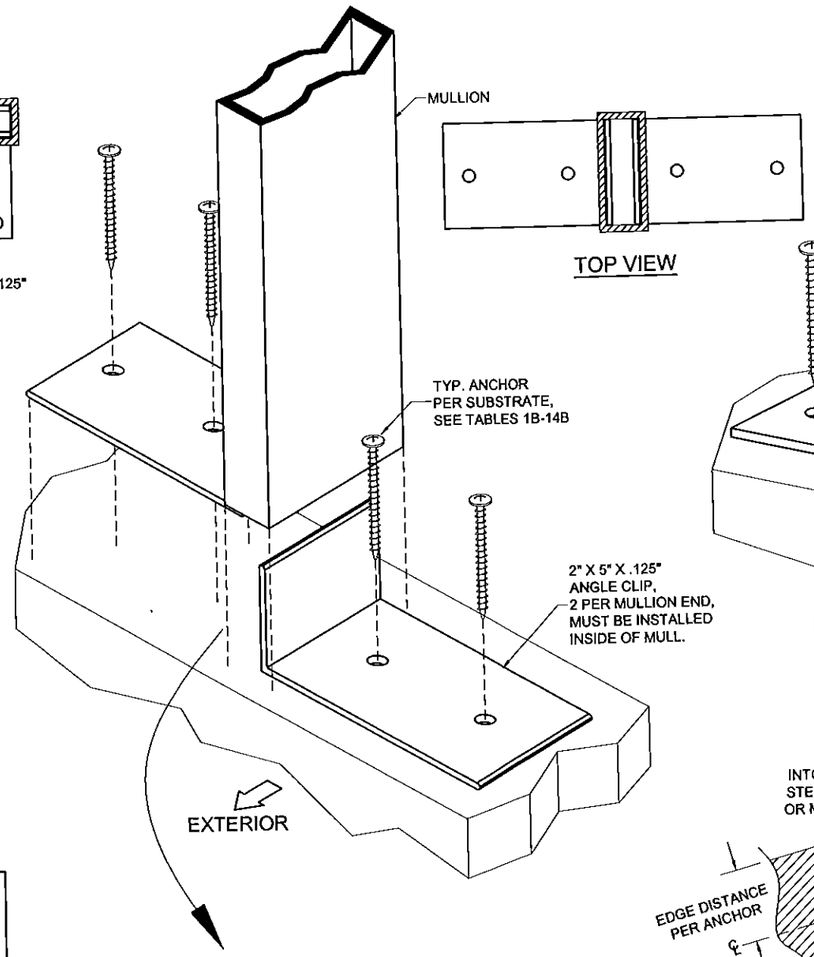

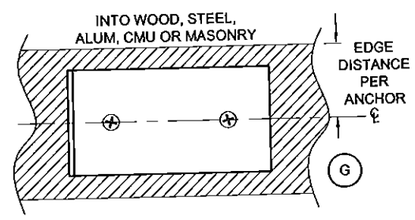

DETAIL H:
BAY MULLION INSTALLATION
(ANGLE CLIP)

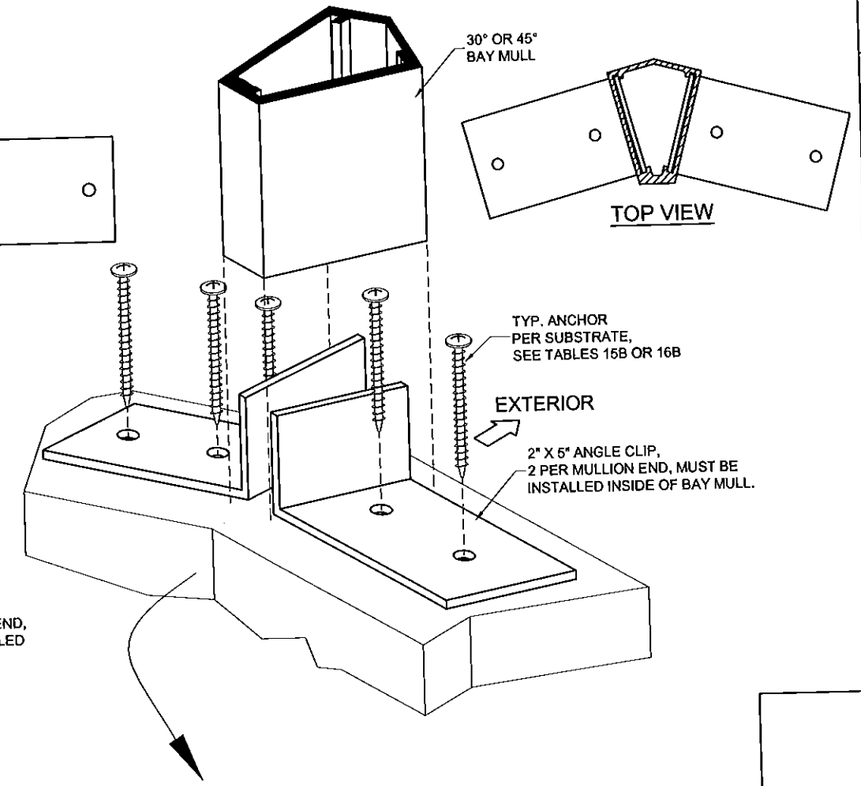

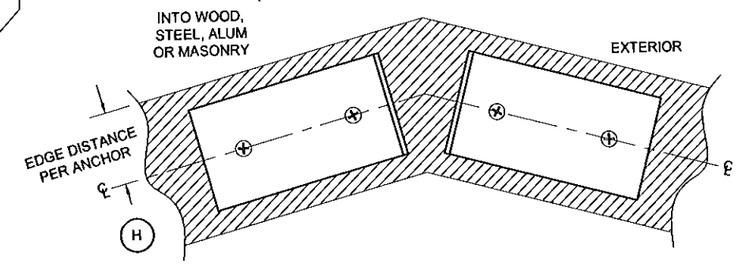

NOTES FOR INSTALLATION OPTIONS F:

1) DETAIL IS NOT APPLICABLE FOR THE BAY OR 1.26" X 2.11" X .125" MULLION.

2) SEE TABLES 1B-13B FOR ANCHOR QUANTITIES AND SHEETS 21-23 FOR HOLE LOCATIONS.

3) THE 2X5 CLIP IS NOT SUITABLE FOR THIS APPLICATION.

NOTES FOR INSTALLATION OPTION G & H:

1) USE 2 ANGLE CLIPS PER MULLION END. CLIPS MUST BE INSERTED INSIDE OF MULLION.

2) DETAIL G: SEE TABLES 1B-14B FOR ANCHOR QUANTITIES AND SHEETS 21-23 FOR HOLE LOCATIONS.

3) DETAIL H: SEE TABLES 15B OR 16B FOR ANCHOR QUANTITIES AND SHEET 22 FOR HOLE LOCATIONS.

PGT®
1070 TECHNOLOGY DRIVE
N. VENICE, FL 34275
P.O. BOX 1529
NOKOMIS, FL 34274
FL CERT. OF AUTH.# 29296

Title:	IMPACT-RESISTANT ALUMINUM TUBE MULLIONS
Description:	INSTALLATION INSTRUCTIONS C
Series:	N/A
Scale:	N/A
Drawing No.	6300JR
Sheet:	4 of 25
Rev:	B
Drawn By:	J ROSOWSKI
Date:	08/29/11
Checked By:	
Date:	
Rev. By:	J ROSOWSKI
Date:	10/10/14
Revision:	NEW MULLS TO SHEETSET

PRODUCT REVISED
as complying with the Florida Building Code
Acceptance No 16-0218.03
Expiration Date May 26, 2021
By Manuel Sosa
Miami Dade Product Control

ANTHONY LYNN MILLER
LICENSE
No. 58705
4/8/16
STATE OF FLORIDA
PROFESSIONAL ENGINEER

A. LYNN MILLER, P.E.
FL P.E.# 58705

EXAMPLE 1: SINGLE VERTICAL MULLION

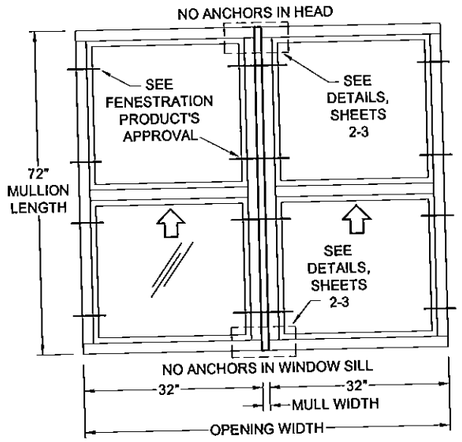

THE BUILDING SUBSTRATE IS KNOWN TO BE WOOD ON ALL FOUR SIDES. THE WINDOW FRAME DEPTH IS 2-1/4". THE OPENING REQUIRES A DESIGN PRESSURE OF +60.0/-60.0 PSF.

1) INITIALLY ASSUMING THAT A 1" WIDE MULLION IS SUITABLE,THE MULLION LENGTH IS 72" AND THE OPENING WIDTH IS 32"+32+1" =65". REFERENCING SHEET 25, THE COLUMN USING RECTANGULAR LOADING MUST BE USED. SCAN THE MULLION TABLES FOR A MULLION THAT IS AT LEAST THE WINDOW FRAME DEPTH OF 2-1/4" AND WILL MEET OR EXCEED THE REQUIRED DESIGN PRESSURE OF +60.0/-60.0 PSF. IF THE TABLE DOES NOT SHOW THE EXACT SIZE, USE THE NEXT LARGER SIZE AVAILABLE.

FROM TABLE 3A, SHEET 7, THE 1" X 2.75" X .375" MULLION (LENGTH = 72", OPENING WIDTH = 70") MEETS THE DEPTH REQUIRED, HOWEVER THE DESIGN PRESSURE IS +/-58.3 PSF AND WOULD NOT BE SUITABLE FOR THIS APPLICATION.

FROM TABLE 4A, SHEET 8, THE 1" X 2.75" X .650" MULLION (LENGTH = 72", OPENING WIDTH = 70") HAS A DESIGN PRESSURE OF +/-72.7 PSF WHICH EXCEEDS THE REQUIREMENTS FOR THE OPENING AND MAY BE USED IN THIS APPLICATION. NOTE THE ANCHOR CAPACITY REQUIRED OF 636 LBS.

2) USE TABLE 4B TO FIND THE ANCHOR TYPE, ANCHOR QUANTITY AND CLIP TYPE REQUIRED FOR THE WOOD SUBSTRATE. BOTH THE STANDARD CLIP WITH (4) #12 ANCHORS AND THE 2X5 ANGLE CLIPS WITH (4) #12 ANCHORS HAVE A CAPACITY 0F 885 LBS. THOUGH EITHER ONE COULD BE USED, THE STANDARD CLIP IS EASIER TO INSTALL.

3) VERIFY THE DESIGN PRESSURE OF THE FENESTRATION PRODUCTS USED WITH THIS MULLION SYSTEM. THE LOWER DESIGN PRESSURE, OF MULLIONS OR FENESTRATION PRODUCTS, WILL APPLY TO THE OVERALL ASSEMBLY. FINAL DESIGN PRESSURE REQUIRES THAT THE BOTH THE MULLION AND THE FENESTRATION PRODUCT BE INSTALLED IN ACCORDANCE WITH THE INSTALLATION SPECIFICATIONS INTO RESPECTIVE SUBSTRATES AND FENESTRATION PRODUCTS TO MULLION.

IN THIS EXAMPLE, THE DESIGN PRESSURE REQUIRED WAS +/-60.0 PSF. THE OVERALL MULLION SYSTEM WAS DETERMINED TO BE 72.7 PSF WITH AN ANCHOR CAPACITY OF 636 LBS. ALTERNATIVELY, THE ANCHOR CAPACITY ADJUSTMENT FORMULA COULD HAVE BEEN USED TO CALCULATE THE ANCHOR CAPACITY REQUIRED FOR THE EXACT DESIGN PRESSURE OF 60 PSF:

$$(60\ \text{PSF}) \times \left(\frac{636\ \text{LBS}}{72.7\ \text{PSF}}\right) = 524.9\ \text{LBS}$$ (MAY BE USED TO QUALIFY # 10 STEEL SCREWS FROM TABLE 4B)

EXAMPLE 2: MULTIPLE MULLIONS

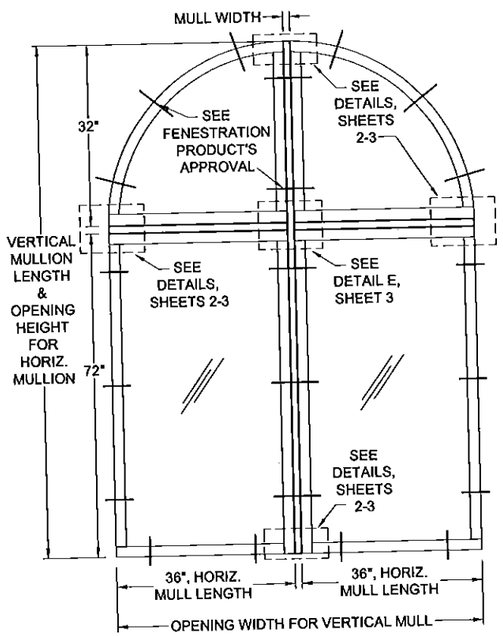

THE BUILDING SUBSTRATE IS KNOWN TO BE CMU ON THE JAMBS AND USES A CONCRETE HEADER AND SILL. THE WINDOW FRAME DEPTH IS 2-3/8". THE OPENING REQUIRES A DESIGN PRESSURE OF +50.0/-55.0 PSF.

FOR THE VERTICAL MULLION:

1) INITIALLY ASSUMING THAT A 1" WIDE MULLION IS SUITABLE, THE MULLION LENGTH IS 32"+72"+1"=105" AND THE OPENING WIDTH IS 36"+36"+1" =73". REFERENCING SHEET 25, THE COLUMN USING RECTANGULAR LOADING SHALL BE USED. SCAN THE MULLION TABLES FOR A MULLION THAT IS AT LEAST THE WINDOW FRAME DEPTH OF 2-3/8" AND WILL MEET OR EXCEED THE REQUIRED DESIGN PRESSURE OF +50.0/-55.0 PSF. IF THE TABLE DOES NOT SHOW THE EXACT SIZE, USE THE NEXT LARGER SIZE AVAILABLE.

FROM TABLE 3A, SHEET 7, THE 1" X 2.75" X .375" MULLION (LENGTH = 108", OPENING WIDTH = 80") MEETS THE DEPTH REQUIRED, HOWEVER THE DESIGN PRESSURE IS +/-15.1 PSF AND WOULD NOT BE SUITABLE FOR THIS APPLICATION.

FROM TABLE 12A, SHEET 16, THE 2" X 4" X .250" MULLION (LENGTH = 108", OPENING WIDTH = 80") HAS A DESIGN PRESSURE OF +/-64.7 PSF WHICH EXCEEDS THE REQUIREMENTS FOR THE OPENING AND MAY BE USED IN THIS APPLICATION. NOTE THE ANCHOR CAPACITY REQUIRED OF 971 LBS.

BECAUSE IT IS NOW KNOWN THAT THE MULLION WILL ADD 2" TO THE WIDTH OF THE MULLED UNIT, THE ADJUSTED OPENING WIDTH IS 36"+36"+2"=74", NOT 73" AS PREVIOUSLY ASSUMED. VERIFY THAT THE DESIGN PRESSURE IS STILL APPLICABLE FOR THE ADJUSTED OPENING. ALTERNATIVELY, THE WINDOW WIDTHS MAY BE REDUCED TO MAINTAIN THE 73" DIMENSION (35-1/2"+35-1/2"+2"=73").

2) USE TABLE 12B TO FIND THE ANCHOR TYPE, ANCHOR QUANTITY AND CLIP TYPE REQUIRED FOR THE CONCRETE SUBSTRATE. IN THIS EXAMPLE, ASSUME THE POURED CONCRETE HEADER AND SILL ARE 8" WIDE. IF THE MULLION CLIP WERE TO BE CENTERED WITHIN THE 8", CARE MUST BE TAKEN TO MAINTAIN THE FASTENER'S EDGE DISTANCE. USING THE STANDARD CLIP WITH (6) 3/16" ULTRACON ANCHORS AT AN EDGE DISTANCE OF 2-1/2" GIVES AN ANCHOR CAPACITY OF 1050 LBS WHICH IS GREATER, AND THEREFORE SUITABLE, FOR THE REQUIRED ANCHOR CAPACITY OF 971 LBS.

FOR THE HORIZONTAL MULLIONS:

BECAUSE THE VERTICAL MULL WILL BE A 2" X 4" X .250" MULLION, IN THIS EXAMPLE WE WILL MATCH THE HORIZONTAL AND VERTICAL MULLIONS, ALTERNATIVELY, ANOTHER MULLION TYPE COULD BE CHOSEN.

1) THE MULLION LENGTH IS 36" AND THE OPENING HEIGHT IS 32"+72"+2" =106". REFERENCING SHEET 25, THE COLUMN USING TRAPEZOIDAL/TRIANGULAR LOADING MAY BE USED. FROM TABLE 12A, SHEET 16, THE 2" X 4" X .250" MULLION (@ LENGTH = 42", OPENING HEIGHT = 120") HAS A DESIGN PRESSURE OF +/-170.0 PSF WHICH EXCEEDS THE REQUIREMENTS FOR THE OPENING AND MAY BE USED IN THIS APPLICATION. NOTE THE ANCHOR CAPACITY REQUIRED OF 521 LBS.

2) USE TABLE 12B TO FIND THE ANCHOR TYPE, ANCHOR QUANTITY AND CLIP TYPE REQUIRED FOR THE CMU SUBSTRATE. IN THIS EXAMPLE, ASSUME THE CMU JAMBS ARE 8" WIDE. IF THE MULLION CLIP WERE TO BE CENTERED WITHIN THE 8", CARE MUST BE TAKEN TO MAINTAIN THE FASTENER'S EDGE DISTANCE. USING THE 2X5 ANGLE CLIPS WITH (4) 3/16" ULTRACON ANCHORS AT AN EDGE DISTANCE OF 1" GIVES AN ANCHOR CAPACITY OF 540 LBS WHICH IS GREATER, AND THEREFORE SUITABLE, FOR THE REQUIRED ANCHOR CAPACITY OF 521 LBS.

4) FOR THE U-CLIP IN THE HORIZONTAL MULLION TO VERTICAL MULLION, USE THE SAME ANCHOR CAPACITY OF 521 LBS. TABLE 12B FOR THE U-CLIP SHOWS THE ANCHOR CAPACITY IS 1074 LBS WHEN USING 3 ANCHORS, WHICH IS GREATER, AND THEREFORE SUITABLE, FOR THE REQUIRED ANCHOR CAPACITY REQUIREMENT OF 521 LBS. THE ANCHOR TYPE IS A #12 STEEL SCREW.

FROM THE ABOVE STEPS, OUR MULLION DESIGN PRESSURE IS:
+/-64.7 PSF FROM THE VERTICAL MULLION;
+/-170.0 PSF FROM THE 36" HORIZONTAL MULLION ATTACHING TO CMU;
+/-170.0 PSF FROM THE 36" HORIZONTAL MULLION ATTACHING TO THE VERTICAL MULLION (INTERSECTION).
THE LOWEST DESIGN PRESSURE IS +/-64.7 PSF AND WOULD APPLY TO ALL OF THE MULLIONS.

VERIFY THE DESIGN PRESSURE OF THE FENESTRATION PRODUCTS USED WITH THIS MULLION SYSTEM. THE LOWER DESIGN PRESSURE, OF MULLIONS OR FENESTRATION PRODUCTS, WILL APPLY TO THE OVERALL ASSEMBLY. FINAL DESIGN PRESSURE REQUIRES THAT THE BOTH THE MULLION AND THE FENESTRATION PRODUCT BE INSTALLED IN ACCORDANCE WITH THE INSTALLATION SPECIFICATIONS INTO RESPECTIVE SUBSTRATES AND FENESTRATION PRODUCTS TO MULLION.

DCI®
1070 TECHNOLOGY DRIVE
N. VENICE, FL 34275
P.O. BOX 1529
NOKOMIS, FL 34274
FL CERT. OF AUTH.# 29296

Title: IMPACT-RESISTANT ALUMINUM TUBE MULLIONS
Description: EXAMPLES
Series: N/A
Scale: N/A
Drawing No. 6300JR
Sheet: 24 of 25
Rev: B
Drawn By: J ROSOWSKI
Date: 08/29/11
Checked By:
Date:
Rev. By: J ROSOWSKI
Date: 10/10/14
Revision: NEW MULLS TO SHEETSET

PRODUCT REVISED
as complying with the Florida
Building Code
Acceptance No 16-0218.03
Expiration Date May 26, 2021
By Manuel Perez
Miami-Dade Product Control

ANTHONY LYNN MILLER
LICENSE
No. 58705
4/8/16
STATE OF FLORIDA
PROFESSIONAL ENGINEER

A. LYNN MILLER, P.E.
FL P.E.# 58705

EXAMPLES OF RECTANGULAR LOADING:

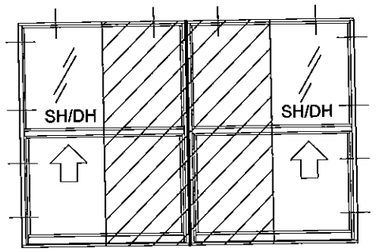

LOADING OF VERTICAL MULLION
SILL OF WINDOWS NOT ANCHORED

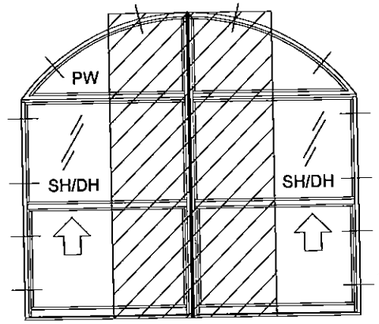

LOADING OF VERTICAL MULLION
WITH INTERSECTING HORIZONTAL MULLIONS

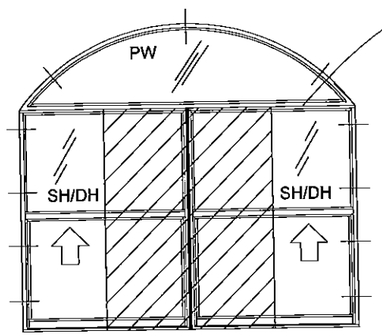

LOADING OF VERTICAL MULLION
SILL OF WINDOWS NOT ANCHORED

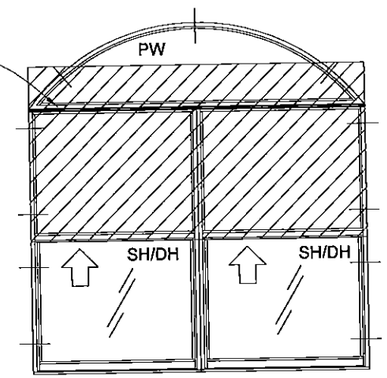

LOADING OF HORIZONTAL MULLION
WITH INTERSECTING VERTICAL MULLION

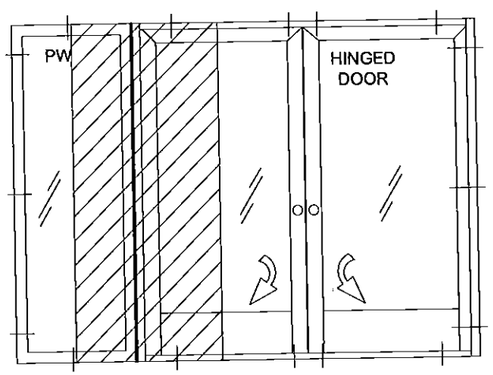

LOADING OF VERTICAL MULLION
PANEL OF HINGED DOOR IS NOT CAPTURED OR ANCHORED

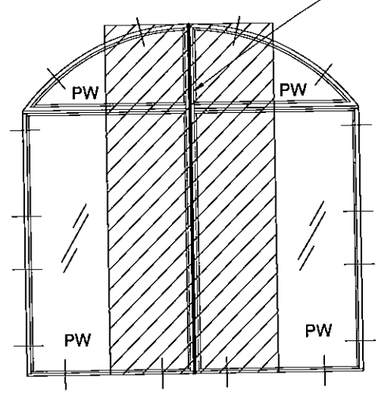

LOADING OF VERTICAL MULLION
WITH INTERSECTING HORIZONTAL MULLIONS

EXAMPLES OF TRAPEZOIDAL/TRIANGULAR LOADING:

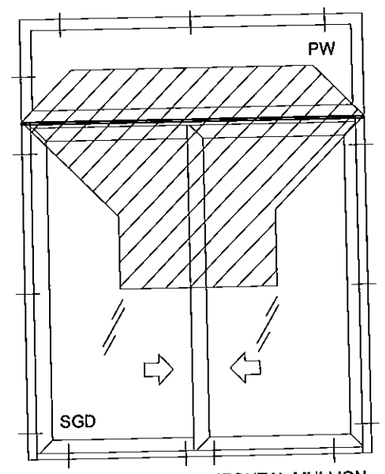

LOADING OF HORIZONTAL MULLION

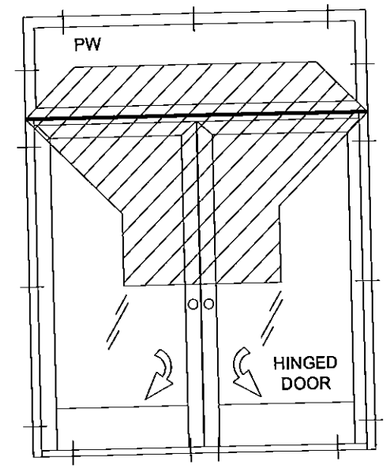

LOADING OF HORIZONTAL MULLION

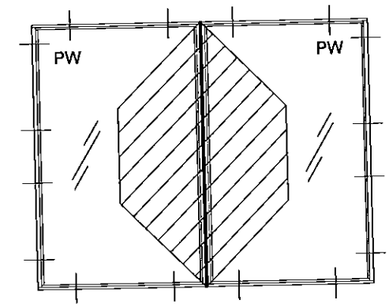

LOADING OF VERTICAL MULLION

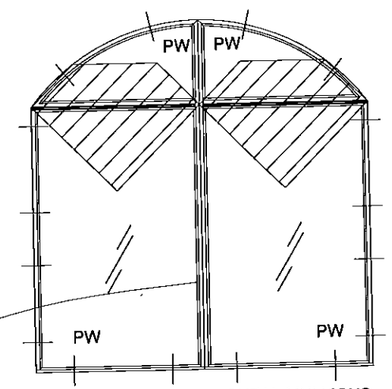

LOADING OF (2) HORIZONTAL MULLIONS

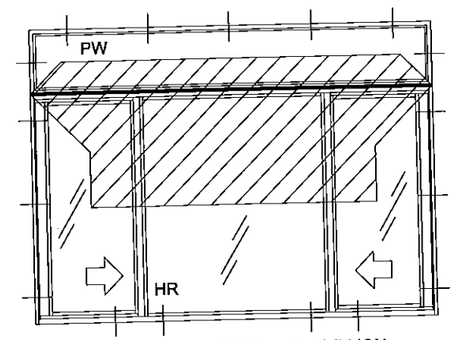

LOADING OF HORIZONTAL MULLION

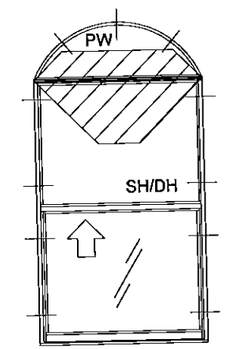

LOADING OF HORIZONTAL MULLION

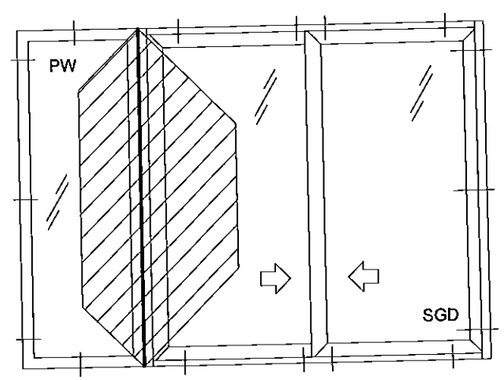

LOADING OF VERTICAL MULLION

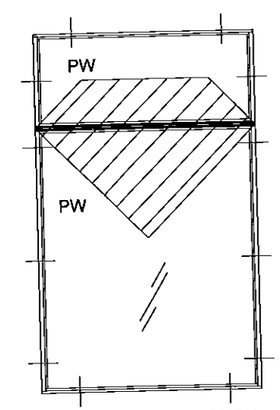

LOADING OF HORIZONTAL MULLION

NOTES:

1) DRAWINGS ARE RERESENTATIONS OF TYPICAL CONFIGURATIONS. CONFIGURATIONS NOT SHOWN MAY BE EXTRAPOLATED FROM THOSE SHOWN.

2) IF THE LOADING TYPE CANNOT BE DETERMINED, USE RECTANGULAR LOADING.

3) SEE PRODUCTS' APPROVAL FOR ACTUAL ANCHOR LOCATIONS.

PRODUCT REVISED
as complying with the Florida Building Code
Acceptance No 16-0218.03
Expiration Date May 26, 2021
By Manuel Perez
Miami-Dade Product Control

ANTHONY LYNN MILLER
LICENSE
No. 58705
STATE OF FLORIDA
PROFESSIONAL ENGINEER
4/8/16

A. LYNN MILLER, P.E.
FL P.E.# 58705

PGT®
1070 TECHNOLOGY DRIVE
N. VENICE, FL 34275
P.O. BOX 1529
NOKOMIS, FL 34274
FL CERT. OF AUTH.# 29296

Title:	IMPACT-RESISTANT ALUMINUM TUBE MULLIONS
Description:	LOADING EXAMPLES
Series:	N/A
Scale:	N/A
Drawing No.	6300JR
Sheet:	25 of 25
Drawn By:	J ROSOWSKI
Date:	08/29/11
Checked By:	
Date:	
Rev.	B
Rev. By:	J ROSOWSKI
Date:	10/10/14
Revision:	NEW MULLS TO SHEETSET

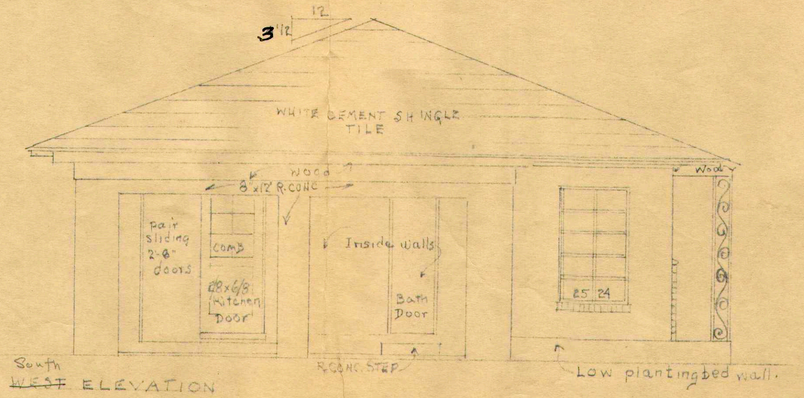

South
~~WEST~~ ELEVATION
SCALE 1/4" = 1'-0"

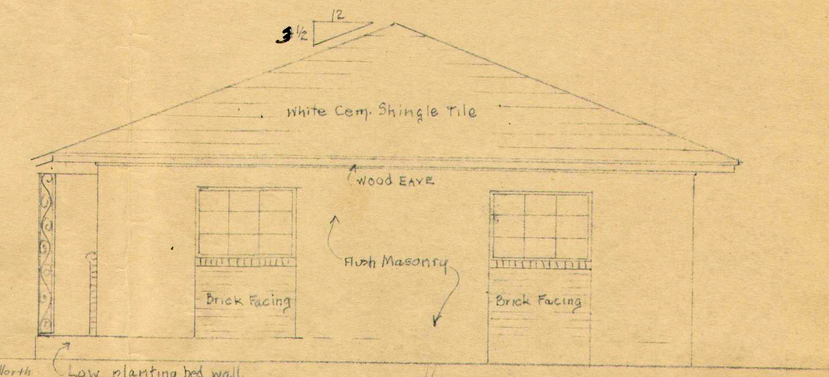

North
~~EAST~~ ELEVATION
SCALE 1/4" = 1'-0"

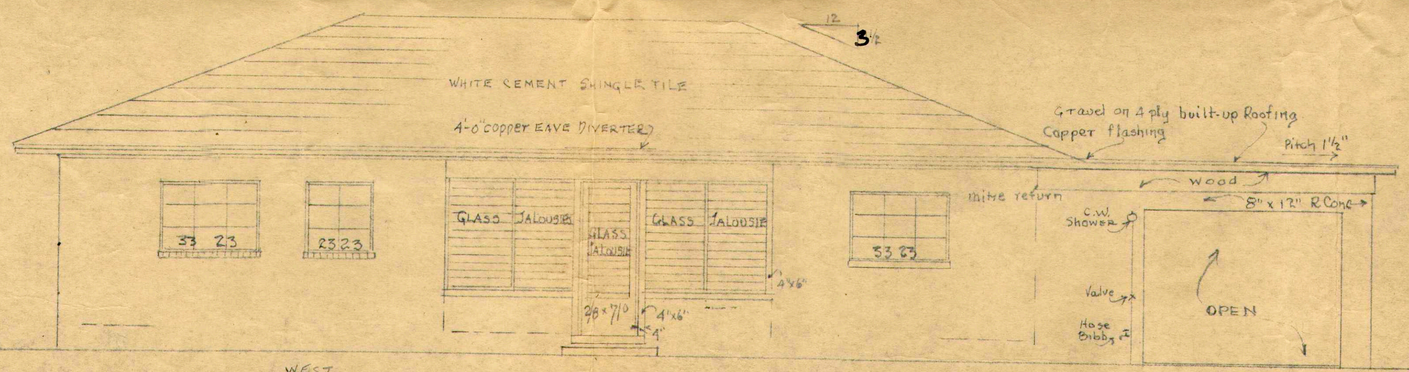

WEST
~~NORTH~~ ELEVATION
SCALE 1/4" = 1'-0"

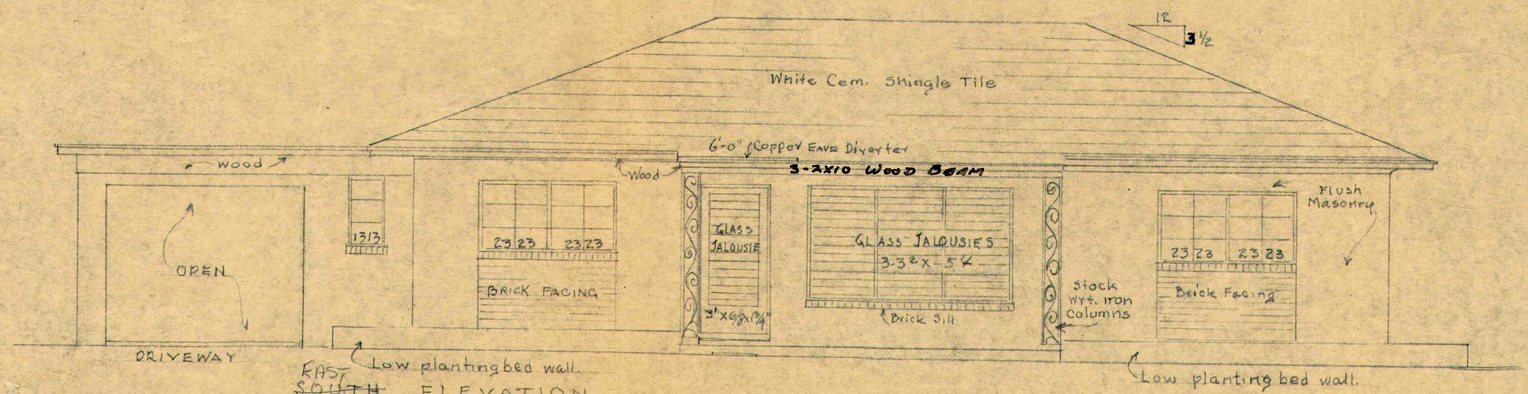

EAST
~~SOUTH~~ ELEVATION
SCALE 1/4" = 1'-0"

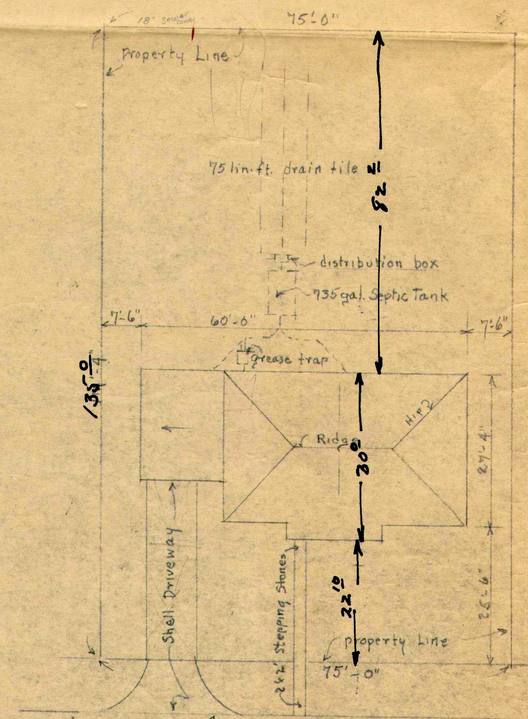

PLOT PLAN
Scale 1/16" = 1'-0"

1107-1111 No. LAKESIDE DR.
LOT 14 - BLOCK 358 & N. 25' of LOT 15

Plot Plan Reversed

Agnes Ballard

OWNER - CONTR.

CHECKED BY	RESIDENCE FOR R.P. DARST, Sr. [redacted]	DATE June 14 1951
JOB No.	AGNES BALLARD ARCHITECT 415 Hampton Road West Palm Beach, Florida	SHEET 2.

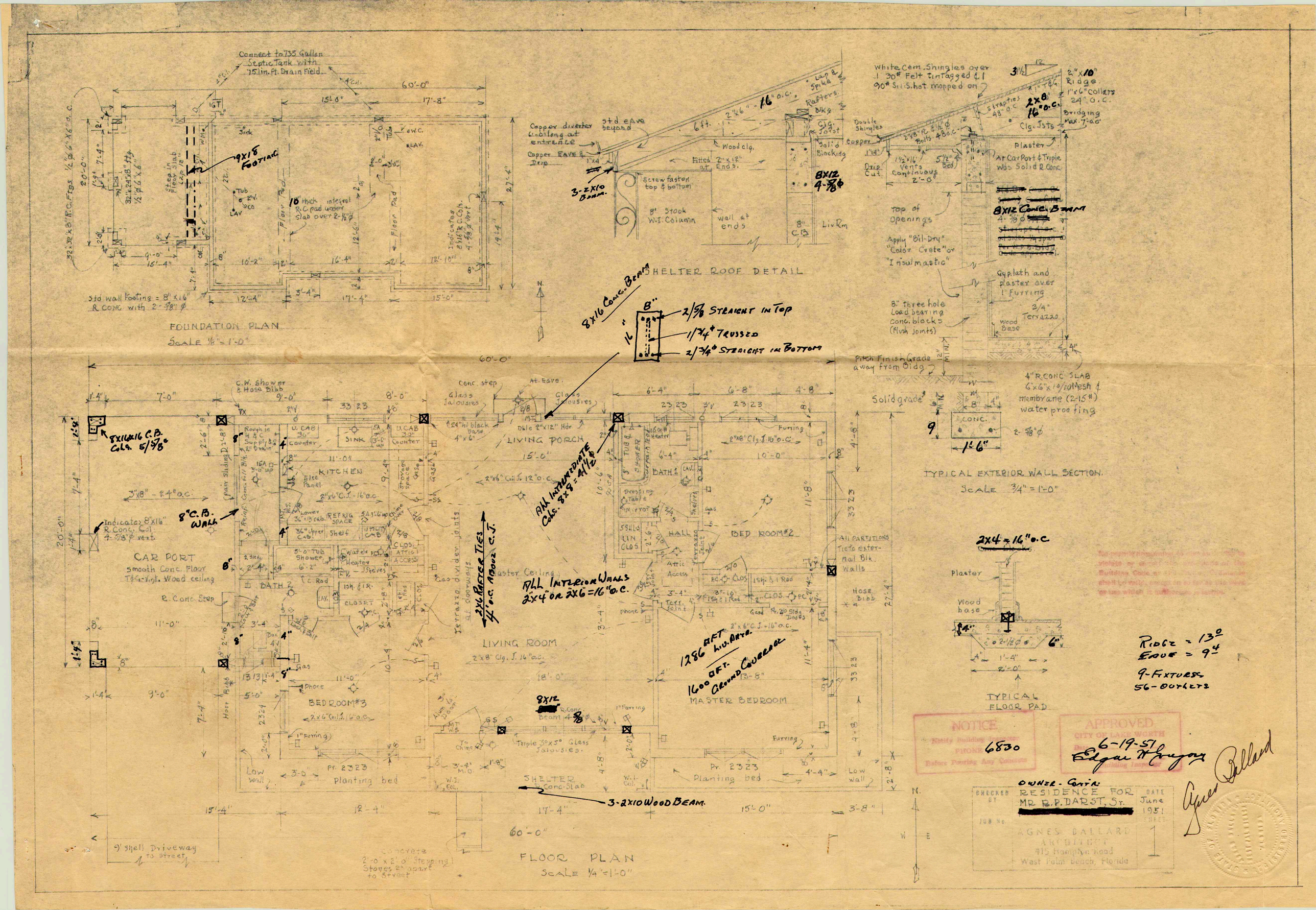
Connect to 735 Gallon Septic Tank with 75 lin. ft. Drain Field
60'-0"
15'-8"
17'-8"
9x18 Footing
10" thick integral R.C. pad under slab over 2-1/8" ϕ
Std wall Footing = 8" x 16" R CONC with 2-5/8" ϕ
FOUNDATION PLAN
SCALE 1/8" = 1'-0"
Copper diverter 6'-0" long at entrance
Copper EAVE & Drip
std eave beyond
3-2x10 Beam
Screw fasten top & bottom
8" Stock W.I. Column
wall at ends
Wood clg.
Fitted 2"x12" at Ends.
Solid Blocking
8x12 4-5/8 ϕ
Liv Rm
SHELTER ROOF DETAIL
White Cem. Shingles over 1 30# Felt Tin Tagged & 1 90# Sul. S. hot mopped on
2"x10" Ridge
1"x6" Collars 24" O.C.
2x8 16" O.C.
Bridging max. 7'-0" O.C.
Clg. Jsts
Double Shingles
Copper
Drip Cut
Plaster
At Carport & Triple was Solid R. Conc.
8x12 Conc. Beam
Top of Openings
Apply "Bil-Dry" "Color Crete" or "Insulmastic"
Gypsum and plaster over 1" Furring
3/4" Terrazzo
Wood Base
8" three hole load bearing conc. blocks (flush joints)
Pitch Finish Grade away from Bldg.
4" R. CONC. SLAB 6"x6"x10/10 Mesh & membrane (2-15#) water proofing
Solid grade
CONC.
2-5/8" ϕ
TYPICAL EXTERIOR WALL SECTION.
SCALE 3/4" = 1'-0"
8x16 Conc. Beam
2/5/8 STRAIGHT IN TOP
1/7/4" TRUSSED
2/7/4" STRAIGHT IN BOTTOM
8x16 C.B. Clg. 5/5/8"
C.W. Shower & Hose Bibb
Conc. step
Glass Jalousies
LIVING PORCH
15'-0"
KITCHEN
Elec Panel
Refrig. Conc. Fl. Blk.
3"x8" - 24" o.c.
Indicator 8"x16" R. Conc. Col. 4-5/8" ϕ vent
8" C.B. Wall
CAR PORT
Smooth Conc. Floor T&G v.n. Wood ceiling
R. Conc. Step
BATH 2
BEDROOM #3
2x6" Ceil. J. 16" o.c.
Low wall
Pr. 2323
Planting bed
9' Shell Driveway to Street
Concrete 2'-0" x 2'-0" Stepping Stones 2" apart to Street
All interior walls 2x4 = 4 1/2"
2x6 Rafter Ties 4' o.c. About C.J.
All Interior Walls 2x4 or 2x6 = 16" o.c.
Plaster Ceiling
Terrazzo divider joints at doorways
LIVING ROOM
2x8" Clg. J. 16" o.c.
8x12 R. Conc. Beam 4-5/8
Triple 30"x50" Glass Jalousies
SHELTER R. Conc. Slab
3-2x10 Wood Beam.
BATH 1
Dressing Table
Furring
2"x8" Clg. J. 16" o.c.
HALL
BED ROOM #2
Attic Access
All Partitions Tie to external Blk. Walls
Hose Bibb
1286 SQ. FT. L.U. AREA
1600 SQ. FT. GROUND COVERAGE
MASTER BEDROOM
Furring
Low wall
FLOOR PLAN
SCALE 1/4" = 1'-0"
TYPICAL FLOOR PAD
2x4 = 16" o.c.
Plaster
Wood base
RIDGE = 13°
EAVE = 9°
9-FIXTURES
56-OUTLETS
NOTICE
Notify Building Inspector PHONE 6830 Before Pouring Any Concrete
APPROVED
CITY OF LAKEWORTH
6-19-51
Edgar H. Gregory
Building Inspector
OWNER - CONTR.
RESIDENCE FOR MR. R.P. DARST, SR.
DATE June 1951
SHEET 1
AGNES BALLARD ARCHITECT
415 Hamplyn Road
West Palm Beach, Florida
Agnes Ballard

Lake Worth, Florida. The Art of Florida Living.sm

City Of Lake Worth
Department for Community Sustainability
Planning, Zoning and Historic Preservation Division
1900 Second Avenue North · Lake Worth · Florida 33461· Phone: 561-586-1687

MEMORANDUM DATE: October 12, 2016

AGENDA DATE: October 19, 2016

TO: Chair and Members of the Historic Resources Preservation Board

RE: **901 North Federal Highway**

FROM: Aimee N. Sunny, Senior Preservation Coordinator
Department for Community Sustainability

TITLE: **HRPB Project Number 16-00100217**: Consideration of a Certificate of Appropriateness (COA) for roof replacement to the subject property located at **901 North Federal Highway**, PCN# 38-43-44-21-15-286-0160. The subject building was constructed c.1926 and is a contributing resource within the Northeast Lucerne Local Historic District.

APPLICANT: Palm Beach Building & Construction
113 17th Avenue South
Lake Worth, FL 33460

OWNER: Mariusz and Iwona Baran
317 North Federal Highway
Lake Worth, FL 33460

BACKGROUND:

The property at 901 North Federal Highway has a two-story two-family structure built c.1926 in a Mediterranean Revival style. The property has frontage on North Federal Highway to the east, and 9th Avenue North to the south. The original architectural plans for the structure are not available in the City's property files, however the file has extensive information regarding the structure. The original Property Appraiser's card from 1943 is available, and lists the building's materials and footprint at that time. The card states that the structure had a galvanized interlocking roof system in 1943.

Based on the property file, the building has undergone few alterations over time, including replacement of some original windows with aluminum awning windows and the addition of a covered front porch. The building retains many character defining features, including a textured stucco finish, metal shingle roof, some original 1/1 wood double-hung windows, wood rafter tails, exterior stair and arched entry, and a stucco chimney. Overall, the building retains a high level of historic integrity of location, setting, materials, craftsmanship, and design.

REQUEST:

The Applicant is proposing to replace the existing interlocking galvanized metal shingles with a 16" wide steel standing seam roof panel system.

COMPREHENSIVE PLAN CONSISTENCY:

It is the analysis of Staff that the project, as proposed, is not consistent with the Comprehensive Plan goals and objectives concerning historic preservation and housing due to the fact that the Applicant is proposing a change that will have an adverse effect on the historic integrity of the property.

Goal 1.4 Encourage preservation and rehabilitation of historic and natural resources and where appropriate restrict development that would damage or destroy these resources. (Objective 1.4.2)

Objective 3.2.5: To encourage the identification of historically significant housing, and to promote its preservation and rehabilitation as referenced by the Surveys of Historic Properties conducted for the City of Lake Worth.

Policy 3.2.5.1: Properties of special value for historic, architectural, cultural or aesthetic reasons will be restored and preserved through the enforcement of the City's Historic Preservation Ordinance to the extent feasible.

ANALYSIS:

Staff has reviewed the documentation and materials provided in this application and applied the applicable guidelines and standards found in the City's Historic Preservation Ordinance, detailed in Attachment 1 – Decision Criteria.

The National Park Service and Secretary of the Interior's Standards have very specific criteria regarding replacement of historic materials. Specifically Standards 2, 5, and 6 apply in this situation:

Standard 2 - The historic character of a property will be retained and preserved. The removal of distinctive materials or alteration of features, spaces, and spatial relationships that characterize a property will be avoided.

Standard 5 - Distinctive materials, features, finishes, and construction techniques or examples of craftsmanship that characterize a property will be preserved.

Standard 6 - Deteriorated historic features will be repaired rather than replaced. Where the severity of deterioration requires replacement of a distinctive feature, the new feature will match the old in design, color, texture, and, where possible, materials. Replacement of missing features will be substantiated by documentary and physical evidence.

According to the Secretary of the Interior's Standards, disctinctive materials that characterize a property shall be preserved. The roof material is an important character defining feature of a historic property. According to the 1943 Property Appraiser's card, the structure had a galvanized interlocking roof system. These same metal shingles are still in place today, and have rusted over time. It is possible that the metal shingles are not the original roof material, however the shingles have been in place since the 1940's, are compatible with the style of architecture, and have acquired significance over time.

It is the analysis of Staff that the proposed change to a steel standing seam roof is not appropriate for the structure or the architectural style, and negatively effects a character defining feature of the property. The metal shingles have a horizontal rhythm and scale that is substantially different from the crisp vertical lines and shadows of the standing seam roof. The metal shingles represent a distinctive material and level of craftsmanship that is very unique in Lake Worth, and should be preserved.

The National Park Service Preservation Brief #4 "Roofing for Historic Buildings" has been included as Attachment #5. This Brief discusses the issues and options for the repair and replacement of historic roofs. Under the "Alternative Materials" section of the Brief, Staff would like to draw special attention to this paragraph:

"In a rehabilitation project, there may be valid reasons for replacing the roof with a material other than the original. The historic roofing may no longer be available, or the cost of obtaining specially fabricated materials may be prohibitive. But the decision to use an alternative material should be weighed carefully against the primary concern to keep the historic character of the building. If the roof is flat and is not visible from any elevation of the building, and if there are advantages to substituting a modern built-up composition roof for what might have been a flat metal roof, then it may make better economic and construction sense to use a modern roofing method. But if the roof is readily visible, the alternative material should match as closely as possible the scale, texture, and coloration of the historic roofing material."

Replacement metal shingles are still available, and are therefore technically feasible. Staff has previously located at least three different products that could closely replicate the existing metal shingles and are approved to be installed in this area. These products include a Berridge "Victorian" silver metal shingle, a Classic Metal Roofing Systems "Oxford Shingle" in Shake Gray, and a Tamko "Stonecrest Tile Shingle" in Sierra Slate Gray or a custom silver color. Basic information about these products has been included as Attachment 6. Additionally, this is the primary sloped roof for the structure and is readily visible. The metal shingles are the only product that will properly replicate the "scale, texture, and coloration of the historic roofing material" as required by National Park Service's Standards for the Rehabilitation of Historic Properties.

Staff had previously contacted the Florida Division of Historical Resources with regards to a request for a metal shingle roof replacement with standing seam metal. The response from the State's Senior Architect, Kenneth Cureton, is included as Attachment 3. In particular, Staff would like to draw attention to the follow excerpt,

"We would <u>strongly advise against</u> sheet metal products, since the strong vertical lines and shadows of such products would adversely impact the historic status of the building, as it would completely change the character of the roof and have no historical basis."

If it is determined that the metal shingles are not financially feasible, the recommendation from the Florida Division of Historical Resources is that a light gray architectural dimensional shingle should be used. Staff will defer to the Board regarding the economic feasibility of the products.

<u>CONSEQUENT ACTION</u>:
Approve the application; approve the application with conditions; continue the hearing to a date certain to request additional information; or deny the application.

<u>RECOMMENDATION</u>:
Staff recommends that the Board deny the application as submitted, given that the metal roof installation as proposed by the Applicant does not meet the Secretary of the Interior's Standards for Rehabilitation, does not meet the criteria set forth in the City of Lake Worth Land Development Regulations §23.5-4(k), and will have an adverse effect on the integrity and character of the property.

If the Board chooses to approve a replacement roof for the structure, Staff recommends the following conditions:

1) The replacement roof material shall be silver metal shingles, to replicate the existing metal shingles as closely as possible, subject to Staff review at permitting and inspection during construction.

POTENTIAL MOTION:

I MOVE TO **APPROVE** HRPB 16-00100217: Consideration of a Certificate of Appropriateness (COA) for a roof replacement for the subject property located at **901 North Federal Highway**, based upon the preponderance of competent substantial evidence, and subject to the Staff's recommended conditions of approval.

I MOVE TO **DENY** HRPB 16-00100217: Consideration of a Certificate of Appropriateness (COA) for a roof replacement for the subject property located at **901 North Federal Highway** because the Applicant has not established by a preponderance of the evidence that the application is in compliance with the City of Lake Worth Land Development Regulations Section 23.5-4, the Secretary of the interiors Standards for the Rehabilitation of Historic Properties, and the City's Comprehensive Plan.

ATTACHMENTS:

1. Administrative Decision Criteria
2. Application Photographs
3. Memo from Kenneth Cureton
4. Roof Specifications
5. NPS Preservation Brief #4 "Roofing for Historic Buildings"
6. Metal Shingle Options

LOCATION MAP

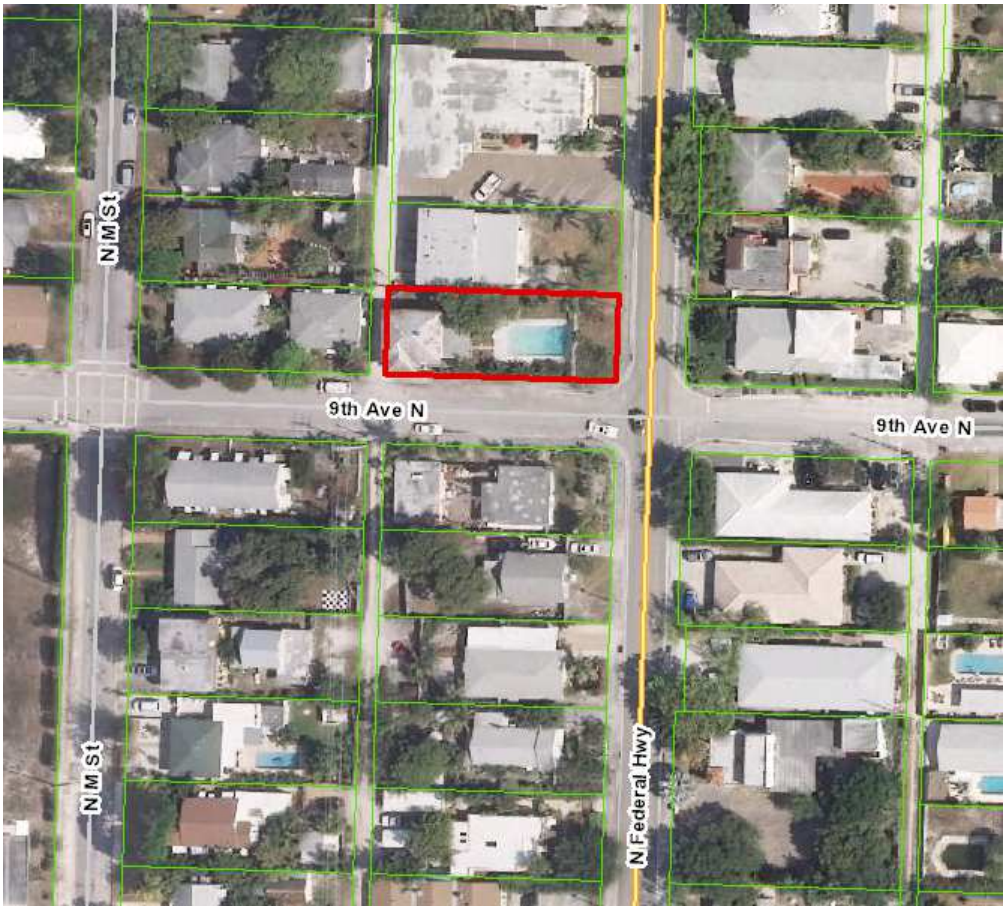

MEMORANDUM

DATE: October 12, 2016

TO: Chair and Members of the Historic Resources Preservation Board

FROM: Aimee N. Sunny, Senior Preservation Coordinator
Department of Community Sustainability

SUBJECT: **HRPB Project Number 16-00100217**: Consideration of a Certificate of Appropriateness (COA) for roof replacement to the subject property located at **901 North Federal Highway**, PCN# 38-43-44-21-15-286-0160. The subject building was constructed c.1926 and the property is a contributing resource within the Northeast Lucerne Local Historic District.

HRPB Meeting Date: October 19, 2016

Per Section 23.5-4k(1) of the historic preservation ordinance, the Board shall use the following criteria in making a determination:

A. What is the effect of the proposed work on the landmark or the property upon which such work is to be done?
Response: It is the analysis of Staff that the proposed work on the property located at 901 N. Federal Highway will have an adverse visual effect on the building.

B. What is the relationship between such work and other structures on the landmark site or other property in the historic district?
Response: The proposed work will have no direct physical effect on any surrounding properties within the surrounding Northeast Lucerne Local Historic District. However, the project would have an adverse visual effect on the building itself and an indirect adverse effect on the district.

C. To what extent will the historic, architectural, or archaeological significance, architectural style, design, arrangement, texture, materials and color of the landmark or the property be affected?
Response: The project as proposed would have an adverse effect on the integrity of material and design of the building. The proposed roof replacement is not compatible with the architectural style and design of the structure.

D. Would denial of a certificate of appropriateness deprive the property owner of reasonable beneficial use of his property?
Response: The denial of this COA as submitted does not prevent the Applicant from proposing other alterations to the home, or re-roofing with an alternate recommended style.

E. Are the applicant's plans technically feasible and capable of being carried out within a reasonable time?
Response: Yes.

F. Do the plans satisfy the applicable portions of the general criteria contained in the United States Secretary of the Interior's Standards for Rehabilitation then in effect or as they may be revised from time to time? The current version of the Secretary's Guidelines provides as follows:

(1) A property shall be used for its historic purpose or be placed in a new use that requires minimal change to the defining characteristics of the building and its site and environment.
Response: No change to the use of the property is proposed.

(2) This historic character of the property shall be retained and preserved. The removal of historic materials or alteration of features and spaces that characterize a property shall be avoided.
Response: It is the opinion of Staff that the proposed metal roof would alter the Mediterranean Revival character of the structure by altering the strong horizontal lines of the existing metal shingle roof.

(3) Each property shall be recognized as a physical record of its time, place and use. Changes that create a false sense of historical development, such as adding conjectural features or architectural elements from other buildings, shall not be undertaken.
Response: Not applicable to this project.

(4) Most properties change over time; those changes that have acquired historic significance in their own right shall be retained and preserved.
Response: Not applicable to this project.

(5) Distinctive features, finishes and construction techniques or examples of craftsmanship that characterize a historic property shall be preserved.
Response: The roof is a distinctive feature of the structure and an example of a unique type of craftsmanship and design in Lake Worth, and should be preserved or replaced in kind.

(6) Deteriorated architectural features shall be repaired rather than replaced, wherever possible. In the event replacement is necessary, the new material should match the material being replaced in composition, design, color, texture, and other visual qualities.

Repair or replacement of missing architectural features should be based on accurate duplications of features, substantiated by historical, physical, or pictorial evidence rather than on conjectural designs or because the different architectural elements from other buildings or structures happen to be available for relocation.
Response: The existing metal shingles have a horizontal rhythm and scale that is substantially different from the crisp vertical lines and shadows of the standing seam roof. The Staff recommended replacement material of metal shingles is based on the existing metal shingles that have been in place on the structure since the 1940's.

(7) Chemical or physical treatments, such as sandblasting, that cause damage to historic materials, shall not be used. The surface cleaning of structures, if appropriate, shall be undertaken using the gentlest means possible.
Response: Not applicable to this project.

(8) Significant archeological resources affected by a project shall be protected and preserved. If such resources must be disturbed, mitigation measures shall be undertaken.
Response: Not applicable to this project.

(9) New additions, exterior alterations or related new construction shall not destroy historic materials that characterize the property. The new construction shall be differentiated from the old and shall be compatible with the massing, size, scale and architectural features to protect the historic integrity of the property and its environment.
Response: The application is not proposing a new addition.

(10) New additions and adjacent or related new construction shall be undertaken in such manner that, if removed in the future, the essential form and integrity of the historic building and its environment would be unimpaired.
Response: Not applicable to this project.

G. What are the effects of the requested change on those elements or features of the structure which served as the basis for its designation and will the requested changes cause the least possible adverse effect on those elements or features?
Response: It is the opinion of Staff that the historic character of the property would be adversely affected by the proposed project as submitted by the Applicant, as outlined above. The proposal does not represent the least possible adverse effect.

Section 23.5-4k(2). *Additional guidelines for alterations.*

In approving or denying applications for certificates of appropriateness for alterations, the HRPB shall also consider the following additional guidelines:

A. Is every reasonable effort being made to provide a compatible use for a property that requires minimal alteration of the building, structure or site and its environment, or to use the property for its originally intended purpose?
Response: No change to the use of the property is proposed.

B. Are the distinguishing original qualities or character of a building, structure or site and its environment being destroyed? The removal or alteration of any historic material or distinctive architectural features shall be avoided whenever possible.
Response: It is the opinion of Staff that the historic character of the property would be adversely affected by the proposed project as submitted by the Applicant, as the original style of the building would be affected by the alterations proposed.

C. When a certificate of appropriateness is requested to replace windows or doors, the HRPB shall permit the property owner's original design when the HRPB's alternative design would result in an increase in cost of thirty (30) percent above the owner's original cost. The owner shall be required to demonstrate to the HRPB that:
(1) The work to be performed will conform to the original door and window openings of the structure; and
Response: Not applicable to this project.

(2) That the replacement windows or doors with less expensive materials will achieve a savings in excess of thirty (30) percent over historically compatible materials otherwise required by this code.
Response: Not applicable to this project.

Trash
Trash

A

MIAMI-DADE COUNTY

DEPARTMENT OF REGULATORY AND ECONOMIC RESOURCES (RER)
BOARD AND CODE ADMINISTRATION DIVISION

MIAMI-DADE COUNTY
PRODUCT CONTROL SECTION
11805 SW 26 Street, Room 208
Miami, Florida 33175-2474
T (786) 315-2590 F (786) 315-2599
www.miamidade.gov/economy

NOTICE OF ACCEPTANCE (NOA)

Metal Sales Manufacturing Corporation
545 South 3rd Street, Suite 200
Louisville, KY 40202

SCOPE:

This NOA is being issued under the applicable rules and regulations governing the use of construction materials. The documentation submitted has been reviewed and accepted by Miami-Dade County RER - Product Control Section to be used in Miami Dade County and other areas where allowed by the Authority Having Jurisdiction (AHJ).

This NOA shall not be valid after the expiration date stated below. The Miami-Dade County Product Control Section (In Miami Dade County) and/or the AHJ (in areas other than Miami Dade County) reserve the right to have this product or material tested for quality assurance purposes. If this product or material fails to perform in the accepted manner, the manufacturer will incur the expense of such testing and the AHJ may immediately revoke, modify, or suspend the use of such product or material within their jurisdiction. RER reserves the right to revoke this acceptance, if it is determined by Miami-Dade County Product Control Section that this product or material fails to meet the requirements of the applicable building code.
This product is approved as described herein, and has been designed to comply with the Florida Building Code including the High Velocity Hurricane Zone of the Florida Building Code.

DESCRIPTION: Vertical Seam Panel

LABELING: Each unit shall bear a permanent label with the manufacturer's name or logo, city, state and following statement: "Miami-Dade County Product Control Approved", unless otherwise noted herein.

RENEWAL of this NOA shall be considered after a renewal application has been filed and there has been no change in the applicable building code negatively affecting the performance of this product.

TERMINATION of this NOA will occur after the expiration date or if there has been a revision or change in the materials, use, and/or manufacture of the product or process. Misuse of this NOA as an endorsement of any product, for sales, advertising or any other purposes shall automatically terminate this NOA. Failure to comply with any section of this NOA shall be cause for termination and removal of NOA.

ADVERTISEMENT: The NOA number preceded by the words Miami-Dade County, Florida, and followed by the expiration date may be displayed in advertising literature. If any portion of the NOA is displayed, then it shall be done in its entirety.

INSPECTION: A copy of this entire NOA shall be provided to the user by the manufacturer or its distributors and shall be available for inspection at the job site at the request of the Building Official.

This NOA renews NOA# 10-0114.04 and consists of pages 1 through 5.
The submitted documentation was reviewed by Alex Tigera.

MIAMI-DADE COUNTY APPROVED

NOA No.: 13-0905.05
Expiration Date: 03/08/19
Approval Date: 02/13/14

ROOFING ASSEMBLY APPROVAL:

Category:	Roofing
Sub-Category:	Non-Structural Metal Roofing
Material:	Steel
Deck Type:	Wood
Maximum Design Pressure	**-136.75 psf.**

TRADE NAMES OF PRODUCTS MANUFACTURED OR LABELED BY APPLICANT:

Product	Dimensions	Test Specifications	Product Description
Vertical Seam Metal Roof	l = various w = 12"or 16" h = 1.75" 0.0225" thick Min. Yield Strength: 50ksi	TAS 110	Grade 50 per ASTM A 792, corrosion resistant, galvalume or galvanized, preformed, standing seam, coated, prefinished, metal panels.
Trim Pieces	l = varies w = varies min. 24 ga.	TAS 110	Standard flashing and trim pieces. Manufactured for each panel width.
Panel Clips	2" wide x 1.875"high x 3.5" long 0.048" thick	TAS 114 Appendix E	Corrosion resistant, formed, painted or unpainted steel clips for metal panel installation.

EVIDENCE SUBMITTED:

Test Agency	Test Identifier	Test Name/Report	Date
Farabaugh Engineering and Testing, Inc.	T180-05	TAS 125	July 2005
Celotex Corporation Testing Services	MTS 520103-4 MTS 520103	TAS 100 ASTM E 8	Dec. 1998 Jan. 1999
Akzo Coatings		ASTM G 23 ASTM B 117	
Valspar Corporation		ASTM G 23 ASTM B 117	
Underwriters Laboratory	R9697	UL 790	July 1998
Hurricane Test Laboratory, Inc.	0103-1213-98 0103-1213-98 0103-0206-09 0103-0711-09	TAS 125 TAS 125 TAS 125 TAS 125	Dec. 1998 09/25/00 03/25/09 01/05/10
PRI Asphalt Technologies, Inc.	MSM-01-02-01	TAS 100	10/24/00
PRI Construction Materials, Inc.	MSMC-007-02-01	TAS 100	03/30/09

APPROVED ASSEMBLIES:

System A:	Vertical Seam Metal Roof Panel (16" and 12" wide only)
Deck Type:	Wood, Non-Insulated
Deck Description:	New Construction $^{19}/_{32}$" or greater plywood or wood plank.
Slope Range:	2": 12" or greater
Maximum Uplift Pressure:	**See Table A below**

Deck Attachment: Deck shall be attached in accordance with applicable Building Code, but in no case shall it be less than 8d ring shank nails spaced 6" o.c. In reroofing, where the deck is less than $^{19}/_{32}$" thick (Minimum $^{15}/_{32}$") the above attachment method must be in addition to existing attachment.

Underlayment: Minimum underlayment shall be an ASTM D 226 Type II installed with a minimum 4" side-laps and 6" end-laps. Underlayment shall be fastened with corrosion resistant tin-caps and 1¼" annular ring-shank nails, spaced 6" o.c. at all laps and two staggered rows 12" o.c. in the field of the roll. Or, any Miami-Dade County Product Control Approved underlayment having a current NOA.

Fire Barrier: Any approved fire barrier having a current NOA. Refer to a current fire directory listing for fire ratings of this roofing system assembly as well as the location of the fire barrier within the assembly. See Limitation # 1.

Valleys: Valley construction shall be in compliance with Roofing Application Standard RAS 133 and with Metal Sales Manufacturing Corporation's current published installation instructions.

Metal Panels and Accessories: Install the "Vertical Seam Panels" and accessories in compliance with Metal Sales Manufacturing Corporation's current, published installation instructions and details. Flashing, penetrations, valley construction and other details shall be constructed in compliance with the minimum requirements provided in Roofing Application Standards RAS 133.

Panels shall be installed with approved clips (3.5" long x 2" wide x 1.875" tall), attached to substrate with two corrosion resistant #10-12 screws of sufficient length to penetrate through the sheathing a minimum of 3/16", at a maximum spacing listed below in Table A, and at 2" from each end.

TABLE A
MAXIMUM DESIGN PRESSURES

Roof Areas	**Field**	**Perimeter and Corner[2]**
Maximum Design Pressure	**-73 psf**	**-136.75 psf**
Maximum Fastener Spacing	**24" o.c.**	**8" o.c.**

1. Extrapolation shall not be allowed

SYSTEM LIMITATIONS

1. Fire classification is not part of this acceptance; refer to a current Approved Roofing Materials Directory for fire ratings of this product.
2. The maximum designed pressure listed herein shall be applicable to all roof pressure zones (i.e. field, perimeters, and corners). Neither rational analysis, nor extrapolation shall be permitted for enhanced fastening at enhanced pressure zones (i.e. perimeters, extended corners and corners).
3. Panels may be rolls formed in continuous lengths from eave to ridge. Maximum lengths shall be as described in Roofing Application Standard RAS 133.
4. All panels shall be permanently labeled with the manufacturer's name and/or logo, city, state, and the following statement: "Miami-Dade County Product Control Approved" **or** with the Miami-Dade County Product Control Seal as seen below. All clips shall be permanently labeled with the manufacturer's name and/or logo, and/or model.

MIAMI-DADE COUNTY
APPROVED

5. All products listed herein shall have a quality assurance audit in accordance with the Florida Building Code and Rule 61G20-3 of the Florida Administrative Code.

PROFILE DRAWING

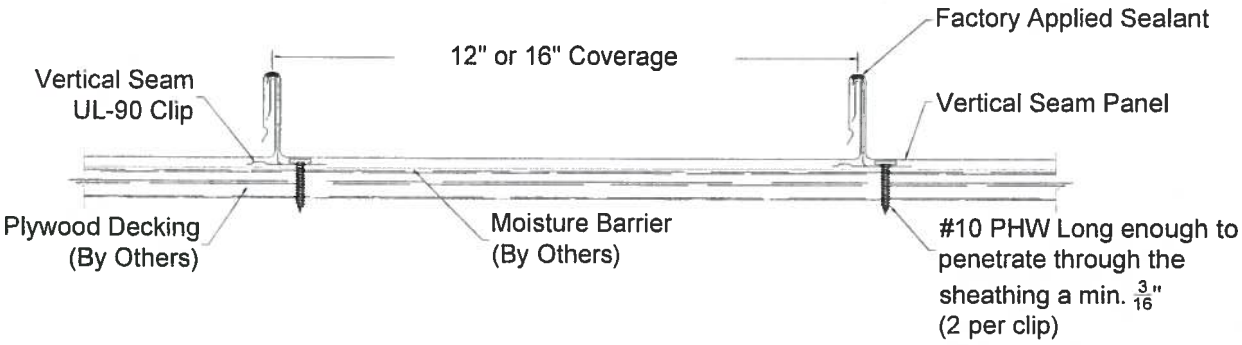

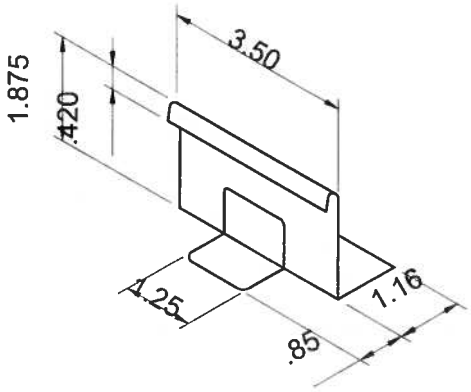

VERTICAL SEAM STEEL PANEL
PANEL CLIP

END OF THIS ACCEPTANCE

BUILDING DIVISION
DEPARTMENT FOR COMMUNITY SUSTAINABILITY
CITY OF LAKE WORTH
1900 2ND AVENUE NORTH
LAKE WORTH, FL 33461
561.586.1647

ROOF / REROOF CHECKLIST

Address: 901 N. Federal Hwy LAKE WORTH Date: 8-15-16

PR Number: _____

Use of Building:

☐ 1 or 2 Family Dwelling ☒ Multi-Family (3 or More Units) ☐ Non-Residential

Exposure Category: B Existing Roof Material: metal Roof

Roof Type: ☐ New Roof ☒ Re-Roofing ☐ Recovering ☐ Repair __ % Roof / Section

Roof Slope: 4 /12 Deck Type: wood Roof Height: 20 Ft.

Proposed Roof Covering: (Check all that apply to this permit application)

☐ Flat Roof ☐ Mechanically Fastened Tile ☐ Mortar / Foam Set Tile
☐ Asphalt Shingles ☒ Metal Panel / Shingle ☐ Wood Shakes / Shingles
☐ Other: _____

Slope of Roofing Work by Area: (Complete all that apply)

Flat Roofs Up to (17%) ≤2" / 12" _____ sf

Slope Roofs (18%) ›2.5" / 12" 18 sf

Is Enhanced Nailing Required Per NOA: Yes ☐ No ☒

CERTIFICATION:

LEOS Exler	Leos Exler	8-15-16
Qualifier Name (Print)	Signature	Date

Lake Worth, Florida. The Art of Florida Living.sm

City Of Lake Worth
Department for Community Sustainability
Planning, Zoning and Historic Preservation Division
1900 Second Avenue North · Lake Worth · Florida 33461· Phone: 561-586-1687

MEMORANDUM DATE: October 12, 2016

AGENDA DATE: October 19, 2016

TO: Chair and Members of the Historic Resources Preservation Board

RE: **914 South Palmway**

FROM: Aimee N. Sunny, Senior Preservation Coordinator
Department for Community Sustainability

TITLE: **HRPB Project Number 16-00100224:** Consideration of a Certificate of Appropriateness (COA) for installation of a PVC fence at the single-family residence located at **914 South Palmway**; PCN# 38-43-44-27-01-032-0050. The subject property was constructed in 1968 and is a non-contributing resource within the South Palm Park Local Historic District.

APPLICANT/OWNER: Kathleen Holmes
730 S Lakeside Dr
Lake Worth, FL 33460

BACKGROUND:

In May 2015, the requested PVC fence was installed at the subject property without first obtaining a Certificate of Appropriateness or a Building Permit. In order to comply the violation and avoid running fines, the Owner removed the fence in September 2015. The owner is now requesting a COA to re-install the PVC fence.

The single-family property at 914 South Palmway was built in 1964 in a Masonry Vernacular style. The property has public frontage on two streets, South Palmway to the west and South Lakeside drive to the east. The building was designed by architect D.H. Grootenboer from Boynton Beach, and has undergone some alterations over time including removal of the white concrete tile roof, alterations to the rear screen porch, and installation of a wood pergola that was approved by the HRPB in December 2015. Character defining features of the building include the original aluminum awning windows, covered recessed entryway, and concrete masonry construction with a stucco finish. The original architectural plans for the structure are available in the City's property files. Overall, the building retains a good degree of historic integrity of location, setting, materials, and design.

REQUEST:

The Applicant has submitted a request to install approximately 200 linear feet of 4' tall white decorative PVC fence around the subject property, per the plans and documentation provided.

COMPREHENSIVE PLAN CONSISTENCY:

It is the analysis of Staff that the project, as proposed, is not consistent with the Comprehensive Plan goals and objectives concerning historic preservation and housing due to the fact that the Applicant is proposing a change that will have an adverse effect on the historic integrity of the property. Specifically, the request is in conflict with these objectives:

Goal 1.4 Encourage preservation and rehabilitation of historic and natural resources and where appropriate restrict development that would damage or destroy these resources. (Objective 1.4.2)

Objective 3.2.5: To encourage the identification of historically significant housing, and to promote its preservation and rehabilitation as referenced by the Surveys of Historic Properties conducted for the City of Lake Worth.

Policy 3.2.5.1: Properties of special value for historic, architectural, cultural or aesthetic reasons will be restored and preserved through the enforcement of the City's Historic Preservation Ordinance to the extent feasible.

ANALYSIS:

Zoning

The proposed installation of a PVC fence is not in compliance with the City of Lake Worth's Land Development Regulations, Section 23.4-4, Fences, Walls, and Gates. According to Code section 23.4-4(b) *Materials*, PVC is not an approved material for fences and gates, therefore Staff is unable to approve a request for a PVC fence installation. The Code does allow for consideration of additional materials not listed, and requires review by either the Zoning Administrator or their designee, in this case the HRPB. The Code does allow for many alternate types of historically compatible, authentic, fence materials including wood, aluminum, and a decorative concrete masonry unit wall.

Additionally, the Planning and Zoning Board and the Historic Resources Preservation Board discussed PVC fencing at the July 15, 2015, Joint Workshop. The Boards collectively decided at that time that PVC was not a sustainable or environmentally sensitive material, that it did not weather well in the harsh South Florida climate, and that the material should not be approved within the entire City.

Historic Preservation

Staff has reviewed the documentation and materials provided in this application and outlined the applicable guidelines and standards found in the City's Historic Preservation Ordinance, detailed in Attachment 1 – Decision Criteria. It is the analysis of Staff that the project as proposed is not compatible with the review criteria set forth in the City's Land Development Regulations, Historic Preservation Ordinance, Section 23.5-4.

The National Park Service and Secretary of the Interior's Standards have very specific criteria regarding the rehabilitation of historic structures. Although the Standards do not specifically address fence design, the Standards do address the overall setting and historic integrity of a property. Specifically, Standards 2 and 9 apply in this situation:

Standard 2 - The historic character of a property will be retained and preserved. The removal of distinctive materials or alteration of features, spaces, and spatial relationships that characterize a property will be avoided.

Standard 9 - New additions, exterior alterations or related new construction shall not destroy historic materials that characterize the property. The new construction shall be differentiated from the old and shall be compatible with the massing, size, scale and architectural features to protect the historic integrity of the property and its environment.

The Standards require that alterations to the overall setting and environment surrounding a historic structure also be compatible with the architectural style and design of the structure. The proposed PVC fence and gate is not compatible within the context of the Masonry Vernacular style structure. Plastic is not an authentic material that

was used for fences or gates during the period of significance, and was not introduced until the 1980's. Typically a Masonry Vernacular structure would have had a wood fence or a decorative concrete masonry unit wall. The proposed decorative detailing of the PVC fence is uncommon with the simplicity of the Masonry Vernacular style structure. This PVC fence also has a large frame and posts, as well as a flat plastic finish.

Public Comment
At the time of publication of this report, Staff has not received any public comment regarding this project.

CONSEQUENT ACTION:
Approve the application; approve the application with conditions; continue the hearing to a date certain to request additional information; or deny the application.

RECOMMENDATION:
Staff recommends that the Board deny the application as submitted, given that PVC fence application does not meet the Secretary of the Interior's Standards for Rehabilitation, does not meet the criteria set forth in the City of Lake Worth Land Development Regulations §23.5-4(k) and 23.4-4(b), and will have an adverse effect on the integrity, setting, environment, and character of the property.

Staff is in support of the Applicant installing a fence on the property that is compliance with the Land Development Regulations and the Secretary of the Interior's Standards. Staff would recommend that the Applicant explore alternate, approved materials. A compatible, revised proposal could be reviewed administratively, and would not require HRPB approval.

POTENTIAL MOTION:

I MOVE TO **APPROVE** HRPB 16-00100224: Consideration of a Certificate of Appropriateness (COA) for a PVC fence installation for the subject property located at **914 South Palmway**, based upon the preponderance of competent substantial evidence.

I MOVE TO **DENY** HRPB 16-00100224: Consideration of a Certificate of Appropriateness (COA) for a PVC fence installation for the subject property located at **914 South Palmway** because the Applicant has not established by a preponderance of the evidence that the application is in compliance with the City of Lake Worth Land Development Regulations Section 23.5-4 and 23.4-4, the Secretary of the interiors Standards for the Rehabilitation of Historic Properties, and the City's Comprehensive Plan.

ATTACHMENTS:
1. Administrative Decision Criteria
2. Photographs
3. Survey
4. Justification Statement

LOCATION MAP

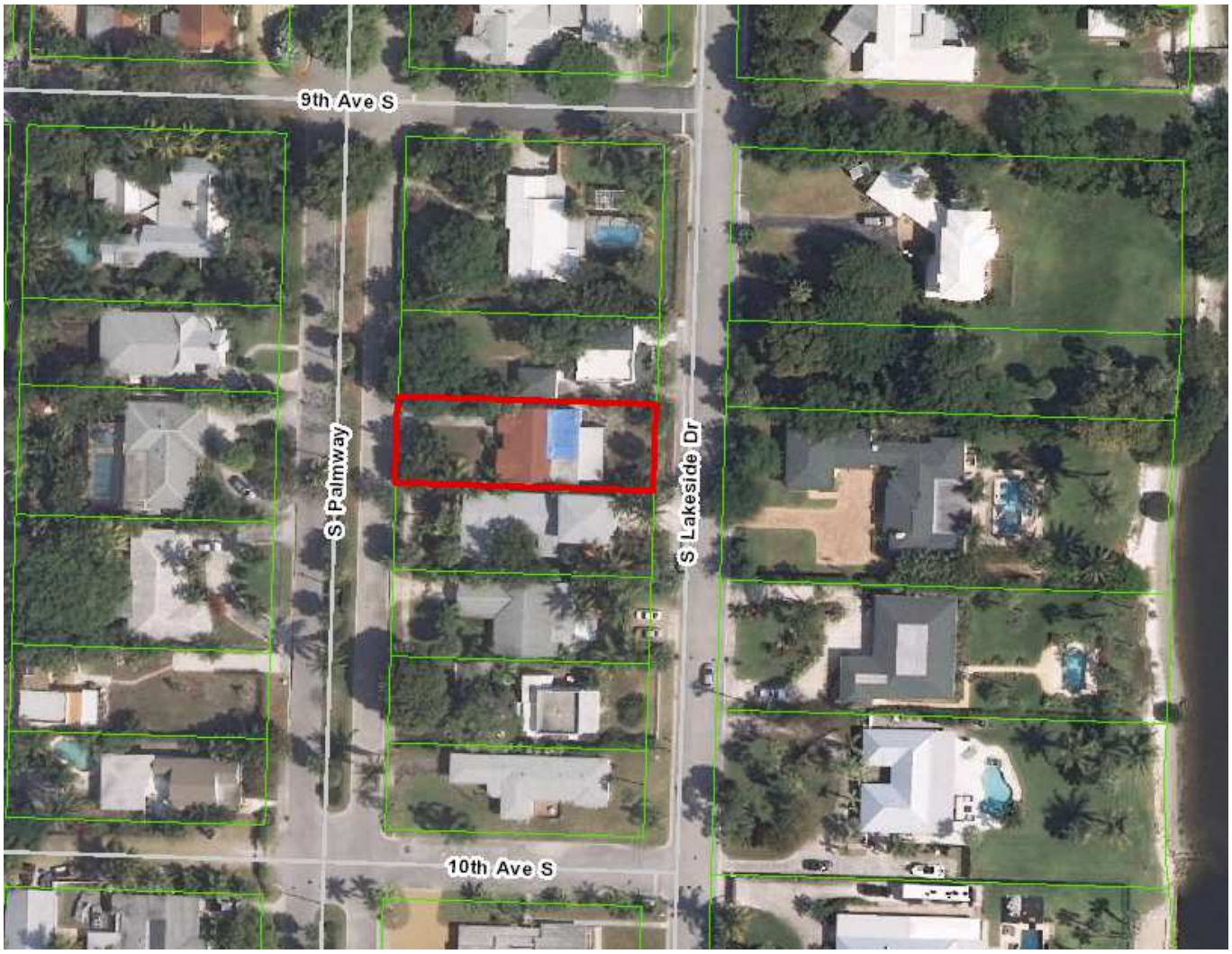

MEMORANDUM

DATE: October 12, 2016

TO: Chair and Members of the Historic Resources Preservation Board

FROM: Aimee N. Sunny, Senior Preservation Coordinator
Department of Community Sustainability

SUBJECT: **HRPB Project Number 16-00100224:** Consideration of a Certificate of Appropriateness (COA) for fence installation for the single-family structure located at **914 South Palmway**; PCN# 38-43-44-27-01-032-0050. The subject property was constructed in 1968 and is a non-contributing resource within the South Palm Park Historic District.

HRPB Meeting Date: October 19, 2016

Per Section 23.5-4k(1) of the historic preservation ordinance, the Board shall use the following criteria in making a determination:

A. What is the effect of the proposed work on the landmark or the property upon which such work is to be done?
Response: It is the analysis of Staff that the proposed PVC fence installation would have an adverse effect on the historic appearance of the building and site, and is not compatible with the design or style of the Masonry Vernacular structure.

B. What is the relationship between such work and other structures on the landmark site or other property in the historic district?
Response: The proposed work will have no direct physical effect on any surrounding properties within the surrounding South Palm Park Local Historic District, however it will have an indirect visual effect on the district.

C. To what extent will the historic, architectural, or archaeological significance, architectural style, design, arrangement, texture, materials and color of the landmark or the property be affected?
Response: The Applicant is proposing work that is not compatible with the architectural design and detailing of the structure and site by proposing a PVC fence that is not compatible with or authentic to the Masonry Vernacular structure. The PVC fence installation will negatively affect the historic integrity of the site and setting of the historic structure.

D. Would denial of a certificate of appropriateness deprive the property owner of reasonable beneficial use of his property?
Response: No, the denial of this COA as submitted does not prevent the Applicant from potentially proposing other alterations to the structure, nor would it make the building uninhabitable.

E. Are the applicant's plans technically feasible and capable of being carried out within a reasonable time?
Response: Yes.

F. Do the plans satisfy the applicable portions of the general criteria contained in the United States Secretary of the Interior's Standards for Rehabilitation then in effect or as they may be revised from time to time? The current version of the Secretary's Guidelines provides as follows:

(1) A property shall be used for its historic purpose or be placed in a new use that requires minimal change to the defining characteristics of the building and its site and environment.
Response: No change to the use of the property is proposed.

(2) This historic character of the property shall be retained and preserved. The removal of historic materials or alteration of features and spaces that characterize a property shall be avoided.
Response: No historic materials are requested to be removed.

(3) Each property shall be recognized as a physical record of its time, place and use. Changes that create a false sense of historical development, such as adding conjectural features or architectural elements from other buildings, shall not be undertaken.
Response: Not applicable to this project.

(4) Most properties change over time; those changes that have acquired historic significance in their own right shall be retained and preserved.
Response: Not applicable to this project.

(5) Distinctive features, finishes and construction techniques or examples of craftsmanship that characterize a historic property shall be preserved.
Response: No historic materials are requested to be removed.

(6) Deteriorated architectural features shall be repaired rather than replaced, wherever possible. In the event replacement is necessary, the new material should match the material being replaced in composition, design, color, texture, and other visual qualities.
Response: No historic materials are requested to be removed.

Repair or replacement of missing architectural features should be based on accurate duplications of features, substantiated by historical, physical, or pictorial evidence rather than on conjectural designs or because the different architectural elements from other buildings or structures happen to be available for relocation.
Response: Not applicable to this project.

(7) Chemical or physical treatments, such as sandblasting, that cause damage to historic materials, shall not be used. The surface cleaning of structures, if appropriate, shall be undertaken using the gentlest means possible.
Response: Not applicable to this project.

(8) Significant archeological resources affected by a project shall be protected and preserved. If such resources must be disturbed, mitigation measures shall be undertaken.
Response: Not applicable to this project.

(9) New additions, exterior alterations or related new construction shall not destroy historic materials that characterize the property. The new construction shall be differentiated from the old and shall be compatible with the massing, size, scale and architectural features to protect the historic integrity of the property and its environment.

Response: The proposed fence material and design would alter the integrity of the setting and site design that characterize the property.

(10) New additions and adjacent or related new construction shall be undertaken in such manner that, if removed in the future, the essential form and integrity of the historic building and its environment would be unimpaired.
Response: Not applicable to this project.

G. What are the effects of the requested change on those elements or features of the structure which served as the basis for its designation and will the requested changes cause the least possible adverse effect on those elements or features?
Response: It is the opinion of Staff that the historic character of the property would be adversely affected by the proposed project as submitted by the Applicant, as outlined above. The requested PVC fence installation does not represent the least possible adverse effect on the property. A wood fence or decorative concrete masonry unit wall could be installed that would complement the Masonry Vernacular structure and would be in compliance with the Land Development Regulations.

Section 23.5-4k(2). *Additional guidelines for alterations.*

In approving or denying applications for certificates of appropriateness for alterations, the HRPB shall also consider the following additional guidelines:

A. Is every reasonable effort being made to provide a compatible use for a property that requires minimal alteration of the building, structure or site and its environment, or to use the property for its originally intended purpose?
Response: No change to the use of the property is proposed.

B. Are the distinguishing original qualities or character of a building, structure or site and its environment being destroyed? The removal or alteration of any historic material or distinctive architectural features shall be avoided whenever possible.
Response: Not applicable to this project.

C. When a certificate of appropriateness is requested to replace windows or doors, the HRPB shall permit the property owner's original design when the HRPB's alternative design would result in an increase in cost of thirty (30) percent above the owner's original cost. The owner shall be required to demonstrate to the HRPB that:
(1) The work to be performed will conform to the original window openings of the structure; and
Response: Not applicable to this project.
(2) That the replacement windows or doors with less expensive materials will achieve a savings in excess of thirty (30) percent over historically compatible materials otherwise required by this code.
Response: Not applicable to this project.

914 S. Palmway
without fence

914 S. Palmway (front)

914 S. Palmway (back)

914 S. Palmway
with fence

05/29/2015

05/29/2015

07/13/2015

07/13/2015

05/29/2015

07/13/2015

07/13/2015

SPEED
LIMIT
25
07/13/2015

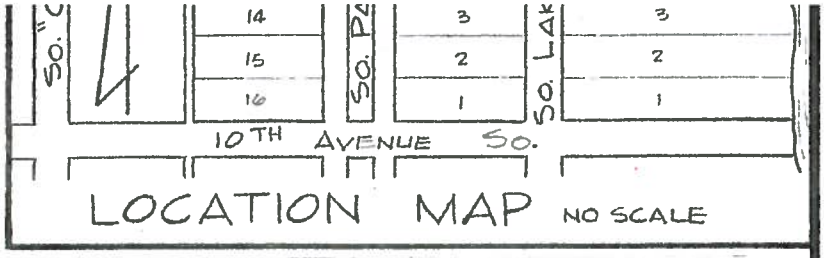

ALL DISTANCES AND ANGLES SHOWN ARE PLAT AND MEASURED

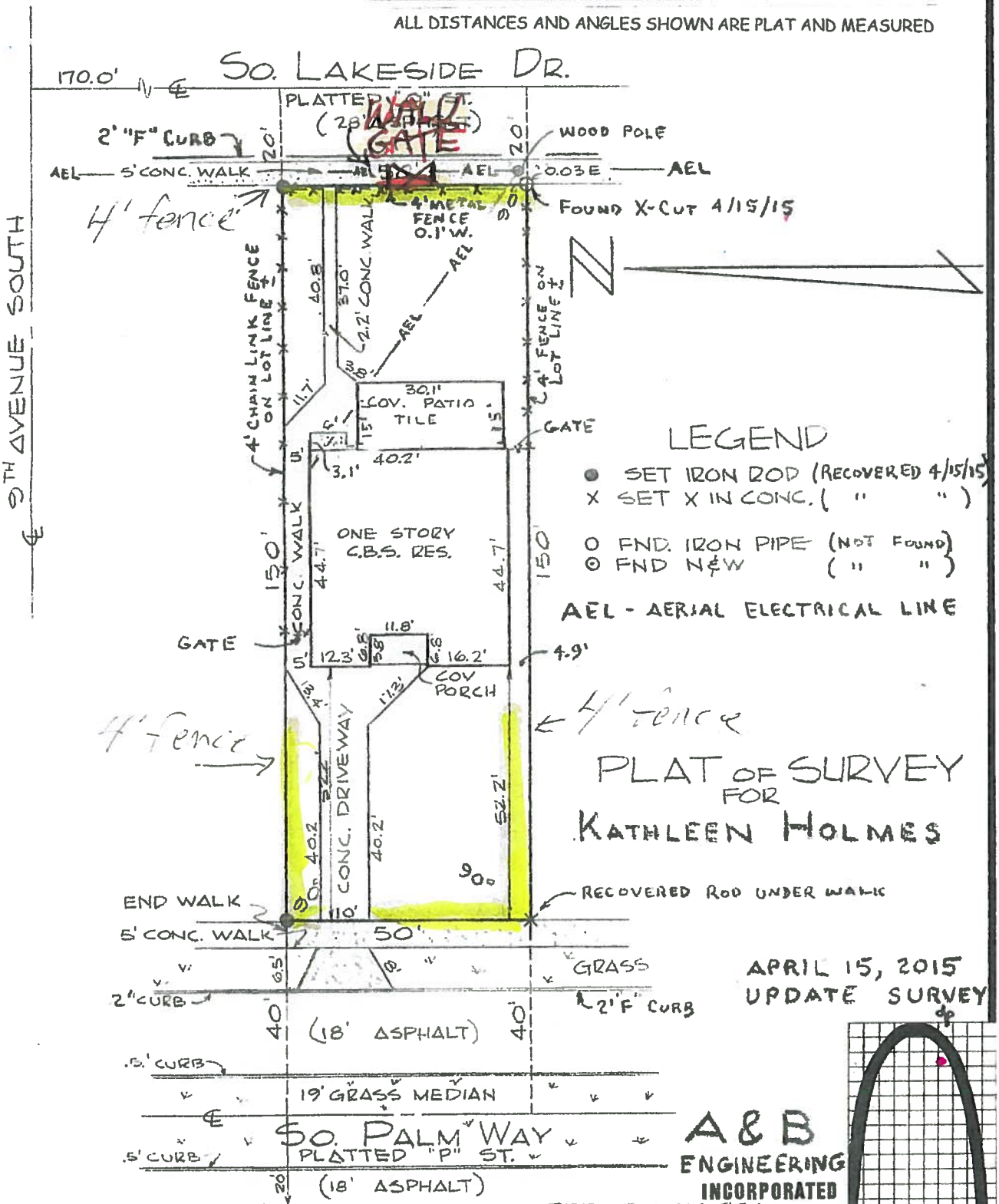

LEGEND

- ● SET IRON ROD (RECOVERED 4/15/15)
- X SET X IN CONC. (" ")
- O FND. IRON PIPE (NOT FOUND)
- ⊙ FND N&W (" ")

AEL - AERIAL ELECTRICAL LINE

PLAT OF SURVEY FOR KATHLEEN HOLMES

APRIL 15, 2015
UPDATE SURVEY

A & B ENGINEERING INCORPORATED

(561) 383-7480

LAND SURVEYORS

REF: FILE 74-256
15-678, D2-820

DATE	10-23-74
SCALE	1"=30'
DR	JES
CK	JLK
B.F-13P.	6

DESCRIPTION:

BEING ALL OF LOT 5 BLOCK 32
ADDITION # 1 TO LAKE WORTH
AS RECORDED IN PLAT BOOK 5, PAGE 9
IN THE RECORDS OF PALM BEACH COUNTY, FLORIDA
THIS BOUNDARY SURVEY MEETS FLORIDA STANDARDS PER 5J-17 F.A.C.

I HEREBY CERTIFY THAT THE PLAT SHOWN HEREON IS A TRUE AND CORRECT REPRESENTATION OF A SURVEY OF THE PROPERTY DESCRIBED IN THE CAPTION THEREOF, MADE UNDER MY

Justification Statement for Decorative Fence at 914 S Palmway

In 2015, I renovated and landscaped a formerly derelict property at this address; a non-contributing vernacular structure built in 1973. As part of my garden plan, I would like to install a rather formal looking border fence as a backdrop for the vegetation. It is not a barrier fence, but purely decorative. Across the back of the property, it connects two previously existing and unfortunate chain link fences on the sides of the property. The fence is made of PVC, which I know the City does not prefer, but in the past 10 years, I received permits for and installed quality PVC fences on two other properties in this neighborhood, one of them historic, to great visual advantage. The fences are still in place and still look spotless. I purchased the fence for 914 S Palmway on the basis of that history. When a fence is used as a trellis for landscape plants, maintenance such as repair and painting becomes impossible with a wood fence after even the smallest about of vegetation growth. The only durable infrastructural fence material I know is good quality PVC (not the Home Depot variety).

I am requesting permission install the same quality fence for this property. I installed this fence in 2015 as described, not knowing it would require a permit, and then took it down as requested by the City. The South Palm Park Neighborhood Association contacted me afterwards to ask me to apply to reinstall it: they knew it might be a challenge, but they stated that the fence improved the look of the property and the whole block so significantly that they wanted to see it permanently in place. They were so grateful that I had salvaged this derelict property and made it an asset to the neighborhood instead of what it had been for 5 years, and felt that the pretty little fence deserved to stay. All the neighbors have expressed the same support for reinstalling the fence.

There are numerous quality PVC fences in this neighborhood, and without exception, they are more attractive than most of the wooden and aluminum fences, many of which need severe maintenance and actual code enforcement. I believe that what the fences are made of should be less significant than the quality of the individual fence and the visual impact they make on our neighborhoods. There are some previously permitted but now hideous wood fences here which make the properties they adjoin look outright rundown and shabby, a shame for our otherwise lovely neighborhood.

I do not have specifications on this fence. I bought it, used, from a fence company in Ft. Myers. They had been hired to replace this existing 4' fence for a client with an 8' fence. Because of the high quality of this particular fence, and the attractive design, they put the reclaimed fence on Craig's List where I found it. It is very solid and sturdy, a noticeable grade above Home Depot grade PVC fences.

Kathleen Holmes
730 S Lakeside Dr

Lake Worth, Florida. The Art of Florida Living.sm

City Of Lake Worth
Department for Community Sustainability
Planning, Zoning and Historic Preservation Division
1900 Second Avenue North · Lake Worth · Florida 33461· Phone: 561-586-1687

MEMORANDUM DATE: October 12, 2016

AGENDA DATE: October 19, 2016

TO: Chair and Members of the Historic Resources Preservation Board

RE: **1001 North M Street**

FROM: Aimee N. Sunny, Senior Preservation Coordinator
Department for Community Sustainability

TITLE: HRPB Project Number 16-00100216: Consideration of a Certificate of Appropriateness (COA) for window and door replacement for the single-family structure located at **1001 N M Street**; PCN# 38-43-44-21-15-304-0160. The subject property was constructed in 1941 and is a contributing resource within the Northeast Lucerne Local Historic District.

OWNER : Dan Cooney
1001 North M Street
Lake Worth, FL 33460

BACKGROUND:

The single-family structure at 1001 N M Street was designed by architect Edgar S. Wortman in 1941 in a Frame Vernacular style. The property has dual public frontage on North M Street to the east and 10th Avenue North to the south. The original architectural plans for the building are available in the City's property files. The building retains the overall layout and configuration consistent with the Frame Vernacular style, however, the building has undergone numerous alterations over time. Based on the information in the property file, exterior alterations include the replacement of some original wood double-hung windows with awning and jalousie windows, enclosure of the carport and rear porch, installation of vinyl coated aluminum siding over wood clapboard siding in 1986, and roof replacement in 2002. In February of 2012, the HRPB approved the addition of large wood pergola to the front of the property facing North M Street. Overall, the building retains a moderate degree of historic integrity of location, setting, materials, and design.

REQUEST:

The Applicant is proposing exterior modifications to the building as follows:

1) Replace all of the existing double-hung, jalousie, and awning windows with new PGT WinGuard white vinyl single-hung impact windows, per the plans and photos provided.
2) Replace the existing front door.
3) Replace the existing original rear door with a new half-lite impact door.
4) Replace the existing French doors with new vinyl single-lite impact French doors.

COMPREHENSIVE PLAN CONSISTENCY:

It is the analysis of Staff that the project, as proposed, is not fully consistent with the Comprehensive Plan goals and objectives concerning historic preservation and housing due to the fact that the Applicant is proposing a material change that will have an adverse effect on the historic integrity of the property. Specifically, the request is in conflict with these objectives:

Goal 1.4 Encourage preservation and rehabilitation of historic and natural resources and where appropriate restrict development that would damage or destroy these resources. (Objective 1.4.2)

Objective 3.2.5: To encourage the identification of historically significant housing, and to promote its preservation and rehabilitation as referenced by the Surveys of Historic Properties conducted for the City of Lake Worth.

Policy 3.2.5.1: Properties of special value for historic, architectural, cultural or aesthetic reasons will be restored and preserved through the enforcement of the City's Historic Preservation Ordinance to the extent feasible.

ANALYSIS:

Zoning

The proposed alterations are not in conflict with the development requirements in the City's Zoning Code.

Historic Preservation

Staff has reviewed the documentation and materials provided in this application and outlined the applicable guidelines and standards found in the City's Historic Preservation Ordinance, detailed in Attachment 1 – Decision Criteria.

The National Park Service and Secretary of the Interior's Standards have very specific criteria regarding replacement of historic materials. Specifically, Standards 2 and 6 apply in this situation:

Standard 2 - The historic character of a property will be retained and preserved. The removal of distinctive materials or alteration of features, spaces, and spatial relationships that characterize a property will be avoided.

Standard 6 - Deteriorated historic features will be repaired rather than replaced. Where the severity of deterioration requires replacement of a distinctive feature, the new feature will match the old in design, color, texture, and, where possible, materials. Replacement of missing features will be substantiated by documentary and physical evidence.

It is the analysis of Staff that the project as proposed is not compatible with the review criteria set forth in the City's Land Development Regulations Section 23.5-4, the City's Comprehensive Plan, and the Secretary of the Interior's Standards for Rehabilitation.

According to the Secretary of the Interior's Standards, distinctive materials that characterize a property shall be preserved. The original wood double-hung windows are an important character defining feature on this structure, and appear to have deteriorated over time. The Applicant has not provided any information regarding the feasibility of repairing the existing windows.

According to the Standards and the Code, the existing wood double-hung windows and the original wood rear door should be repaired if at all possible, and if repair is not possible, then the replacement windows and doors should match the design, color, texture, and materials of the existing windows. The Applicant is requesting white vinyl 1/1 single-hung impact windows on all elevations, which does not fully replicate the design and materials of the existing windows, and is therefore not compatible with the Code. Staff has recommended wood, wood-clad, or aluminum 1/1 double-hung windows to most closely replicate the appearance of the original windows.

The Applicant's request to replace the front door and French doors are compatible with the Code and Staff recommendations, as these doors are not original to the structure. Staff recommends that the new front door be a half-lite, one-panel or horizontal three-panel door to match the existing original wood door rear door in opening "L". The Applicant's request to replace the original deteriorated rear door is compatible with Code, as this door has been substantially altered over time. Staff recommends replacing the door with a half-lite, horizontal three-panel door to match the existing door. All half-lite doors should have either 4 or 9 divided lights. The request to replace the existing French doors with new French doors is compatible, however Staff recommends a wood or aluminum product, rather than vinyl.

The request for a vinyl product is also not compatible with the National Park Service's Standards. Vinyl is not an authentic material used in historic structures, and has historically tended to deteriorate rapidly in the harsh South Florida climate. Older vinyl windows could warp, yellow, and shrink, and cause further deterioration to the structure. Vinyl also tends to have a larger, bulkier frame than wood or aluminum. The Applicant has not provided any information about the quality or grade of the proposed vinyl product for this request.

Public Comment
At the time of publication of this report, Staff has not received any public comment regarding this project.

CONSEQUENT ACTION:
Approve the application; approve the application with conditions; continue the hearing to a date certain to request additional information; or deny the application.

RECOMMENDATION:
Staff recommends that the Board discuss the feasibility of repairing and maintaining the existing wood windows. If hurricane impact protection is requested, the Applicant could explore alternate means of protection including removable shutter panels or fabric screens. If the windows are repairable, then the proposal for replacement does not meet the Secretary of the Interior's Standards for Rehabilitation, does not meet the criteria set forth in the City of Lake Worth Land Development Regulations §23.5-4(k), and will have an adverse effect on the integrity and character of the property.

If the Board decides that repair is not a feasible option, and the Board determines that replacement windows and doors are appropriate for the structure, Staff recommends the following conditions:

1) Replacement windows on all elevations shall be wood, wood-clad, or aluminum 1/1 double-hung windows to match the original window openings. All replacement windows shall be installed in the existing openings, to the same depth in the wall as the existing windows.
2) Due to the lack of information submitted regarding the replacement door products, the doors shall be subject to staff review at permitting. Staff recommends that the front and rear doors shall be replaced with a half-lite, one-panel or horizontal three-panel door, to match the existing original wood door on the structure and that the half-lite glass shall contain either 4 or 9 simulated divided lights.
3) The Applicant shall utilize light gray screens rather than dark vinyl screens.

4) No reflective or mirrored glass shall be used. Any divided lights shall be created using exterior raised applied triangular muntins. No flat or internal muntins shall be permitted.
5) All work shall be subject to staff review during permitting and inspection during construction.

POTENTIAL MOTIONS:

I MOVE TO **APPROVE** HRPB 16-00100216: Consideration of a Certificate of Appropriateness (COA) for window and door replacement for the subject building located at **1001 N M Street**, with the conditions as recommended by Staff, based upon the preponderance of competent substantial evidence, and pursuant to the City of Lake Worth Land Development Regulations Section 23.5-4.

I MOVE TO **DENY** HRPB 16-00100216: Consideration of a Certificate of Appropriateness (COA) for window and door replacement for the subject building located at **1001 N M Street** because the Applicant has not established by a preponderance of the competent substantial evidence that the application is in compliance with the City of Lake Worth Land Development Regulations Section 23.5-4, the Secretary of the interiors Standards for the Rehabilitation of Historic Properties, and the City's Comprehensive Plan.

ATTACHMENTS:

1. Decision Criteria
2. Justification Statement
3. Photographs
4. Floor plan and survey
5. Proposed Materials

LOCATION MAP

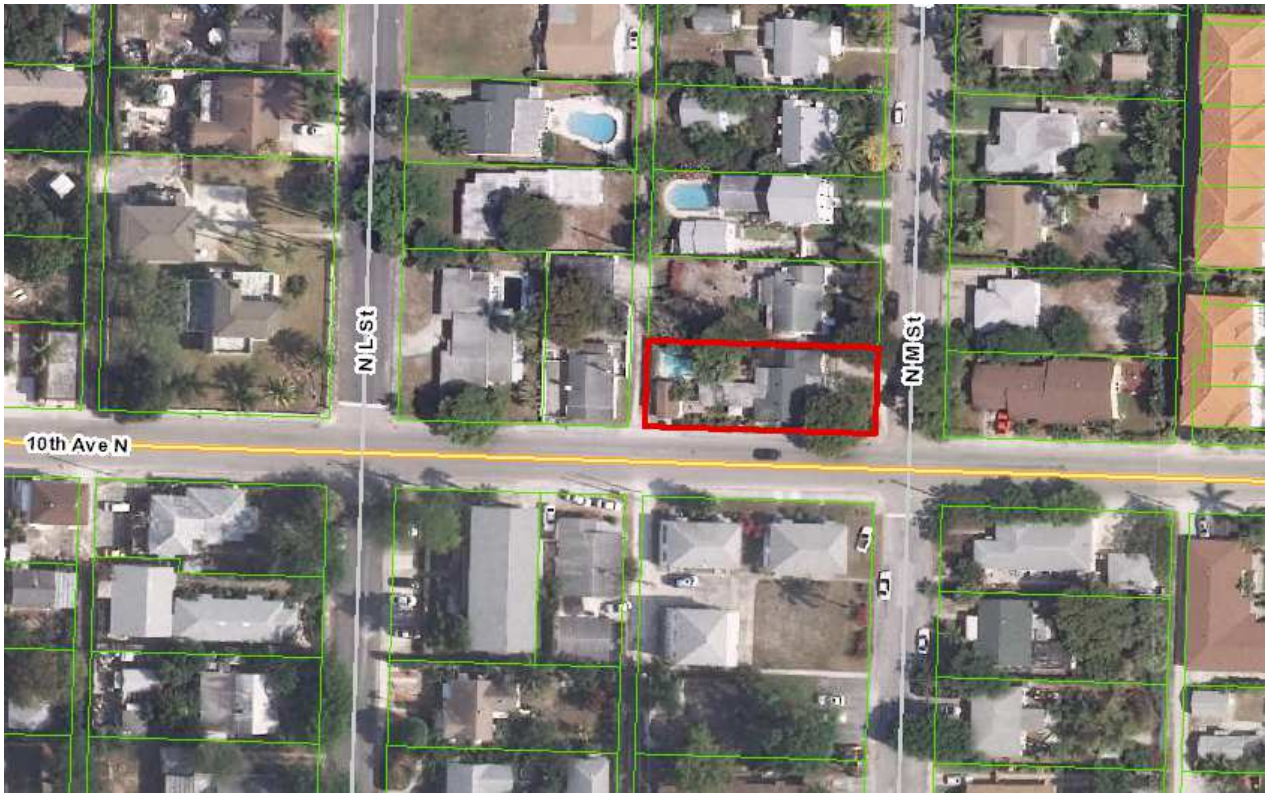

MEMORANDUM

DATE: October 12, 2016

TO: Chair and Members of the Historic Resources Preservation Board

FROM: Aimee N. Sunny, Preservation Planning Coordinator
Department of Community Sustainability

SUBJECT: **HRPB Project Number 16-00100216:** Consideration of a Certificate of Appropriateness (COA) for window and door replacement for the single-family structure located at **1001 North M Street**; PCN# 38-43-44-21-15-304-0160. The subject property was constructed in 1941 and is a contributing resource within the Northeast Lucerne Local Historic District.

HRPB Meeting Date: October 19, 2016

Per Section 23.5-4k (1) of the historic preservation ordinance, the Board shall use the following criteria in making a determination:

A. What is the effect of the proposed work on the landmark or the property upon which such work is to be done?
Response: It is the opinion of Staff that the work proposed would have an adverse effect on the historic appearance of the building, and is not fully compatible with the design or style.

B. What is the relationship between such work and other structures on the landmark site or other property in the historic district?
Response: The proposed work will have no direct physical effect on any surrounding properties within the surrounding Northeast Lucerne Local Historic District, however it will have an indirect visual effect on the district.

C. To what extent will the historic, architectural, or archaeological significance, architectural style, design, arrangement, texture, materials and color of the landmark or the property be affected?
Response: The Applicant is proposing work that is not compatible with the architectural design and detailing of the building by removing the historic wood double-hung windows and replacing them with white single-hung vinyl windows.

D. Would denial of a certificate of appropriateness deprive the property owner of reasonable beneficial use of his property?
Response: No, the denial of this COA as submitted does not prevent the Applicant from potentially proposing other alterations to the structure, nor would it make the building uninhabitable.

E. Are the applicant's plans technically feasible and capable of being carried out within a reasonable time?
Response: Yes.

F. Do the plans satisfy the applicable portions of the general criteria contained in the United States Secretary of the Interior's Standards for Rehabilitation then in effect or as they may be revised from time to time? The current version of the Secretary's Guidelines provides as follows:

(1) A property shall be used for its historic purpose or be placed in a new use that requires minimal change to the defining characteristics of the building and its site and environment.
Response: No change to the use of the property is proposed.

(2) This historic character of the property shall be retained and preserved. The removal of historic materials or alteration of features and spaces that characterize a property shall be avoided.
Response: The Applicant is proposing to remove multiple windows that are character-defining features of this property.

(3) Each property shall be recognized as a physical record of its time, place and use. Changes that create a false sense of historical development, such as adding conjectural features or architectural elements from other buildings, shall not be undertaken.
Response: Not applicable to this project.

(4) Most properties change over time; those changes that have acquired historic significance in their own right shall be retained and preserved.
Response: Not applicable to this project.

(5) Distinctive features, finishes and construction techniques or examples of craftsmanship that characterize a historic property shall be preserved.
Response: The original windows are an example of craftsmanship that characterizes not only this structure, but also the time period and architectural style in general.

(6) Deteriorated architectural features shall be repaired rather than replaced, wherever possible. In the event replacement is necessary, the new material should match the material being replaced in composition, design, color, texture, and other visual qualities.
Response: The proposed window replacement does not match the existing in style, composition, design, or color.

Repair or replacement of missing architectural features should be based on accurate duplications of features, substantiated by historical, physical, or pictorial evidence rather than on conjectural designs or because the different architectural elements from other buildings or structures happen to be available for relocation.
Response: Not applicable to this project.

(7) Chemical or physical treatments, such as sandblasting, that cause damage to historic materials, shall not be used. The surface cleaning of structures, if appropriate, shall be undertaken using the gentlest means possible.
Response: Not applicable to this project.

(8) Significant archeological resources affected by a project shall be protected and preserved. If such resources must be disturbed, mitigation measures shall be undertaken.
Response: Not applicable to this project.

(9) New additions, exterior alterations or related new construction shall not destroy historic materials that characterize the property. The new construction shall be differentiated from the old

and shall be compatible with the massing, size, scale and architectural features to protect the historic integrity of the property and its environment.
Response: The proposed alterations remove historic windows that characterize the property.

(10) New additions and adjacent or related new construction shall be undertaken in such manner that, if removed in the future, the essential form and integrity of the historic building and its environment would be unimpaired.
Response: Not applicable to this project.

G. What are the effects of the requested change on those elements or features of the structure which served as the basis for its designation and will the requested changes cause the least possible adverse effect on those elements or features?
Response: It is the analysis of Staff that the historic character of the property would be adversely affected by the proposed project as submitted by the Applicant, as outlined above. The requested exterior alterations do not represent the least possible adverse effect on the property. There are alternate options, including repair of the existing windows, or replacement using wood, wood-clad, or aluminum 1/1 double-hung windows to more closely replicate the original historic windows. Staff also recommends that the front and rear doors shall be replaced with a half-lite, one-panel or horizontal three-panel doors, to match the existing original wood door on the structure and that the half-lite glass shall contain either 4 or 9 simulated divided lights.

Section 23.5-4k (2). *Additional guidelines for alterations.*

In approving or denying applications for certificates of appropriateness for alterations, the HRPB shall also consider the following additional guidelines:

A. Is every reasonable effort being made to provide a compatible use for a property that requires minimal alteration of the building, structure or site and its environment, or to use the property for its originally intended purpose?
Response: No change to the use of the property is proposed.

B. Are the distinguishing original qualities or character of a building, structure or site and its environment being destroyed? The removal or alteration of any historic material or distinctive architectural features shall be avoided whenever possible.
Response: The windows and rear door can be considered distinctive architectural features and should not be removed unless the level of deterioration is such that the windows and door cannot be repaired. In that case, the replacement windows and door should replicate the existing originals as closely as possible.

C. When a certificate of appropriateness is requested to replace windows or doors, the HRPB shall permit the property owner's original design when the HRPB's alternative design would result in an increase in cost of thirty (30) percent above the owner's original cost. The owner shall be required to demonstrate to the HRPB that:
(1) The work to be performed will conform to the original window openings of the structure; and
Response: The applicant meets this criteria.

(2) That the replacement windows or doors with less expensive materials will achieve a savings in excess of thirty (30) percent over historically compatible materials otherwise required by this code.
Response: Staff must defer to the applicant.

- Jalousie windows have broken panes, do not work, broken handles and louver mechanism. not energy efficient
- Want to have all windows the same and look as if original.
- Want to have all windows/doors to be storm impact that meets miami-dade requirements
- awning window has broken crank mechanism and not energy efficient
- the replacements will give uniform look to house, save on electric because of energy efficiency, will be storm impact and thus safer.
- insulated windows that come with vinyl can lower your peak need for AC/heat on the especially hot/cold days.
- they are termite resistent, will not oxidize or deteriorate.

A

1001

D

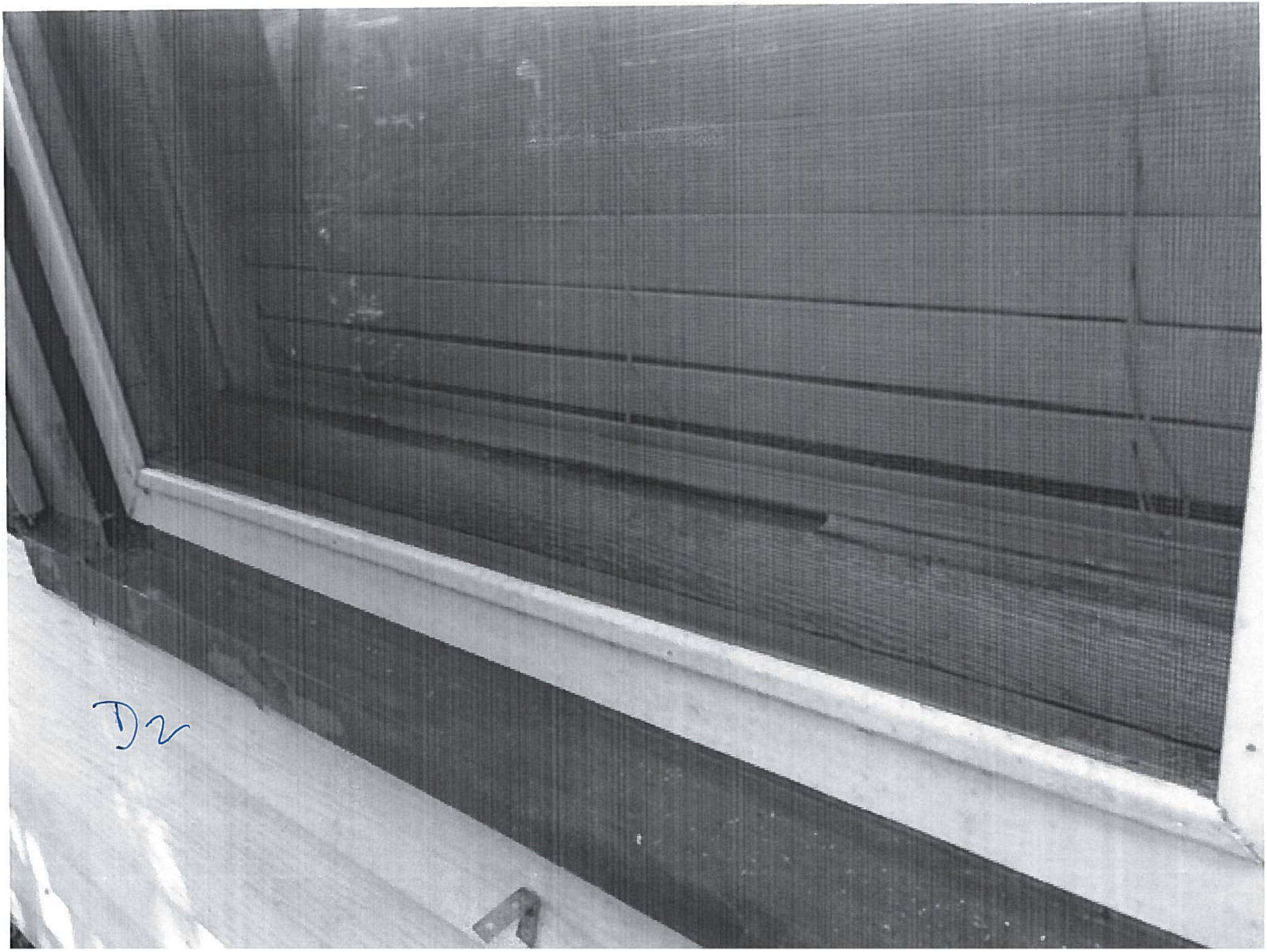
D2

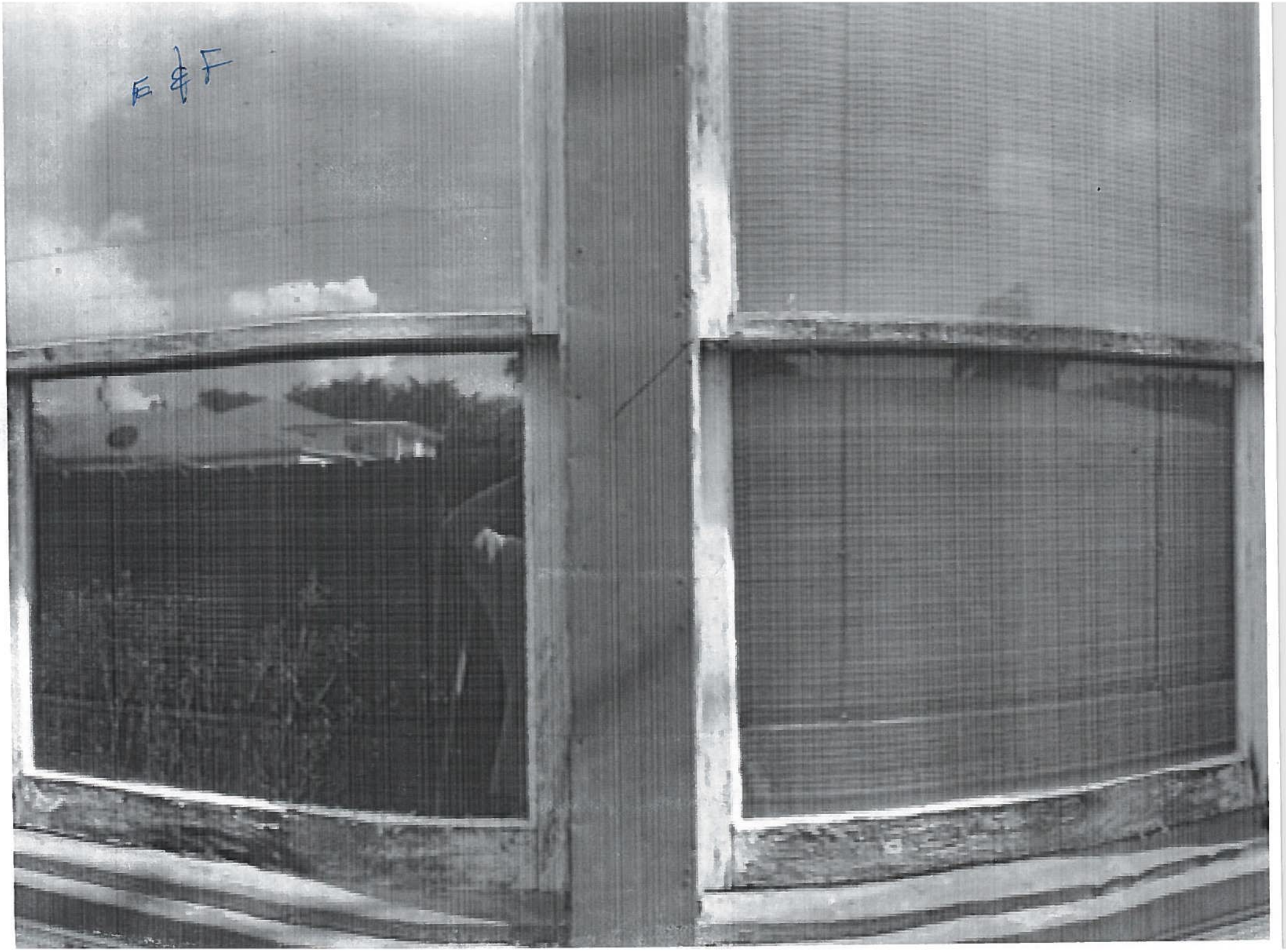
E & F

E&F2

F2

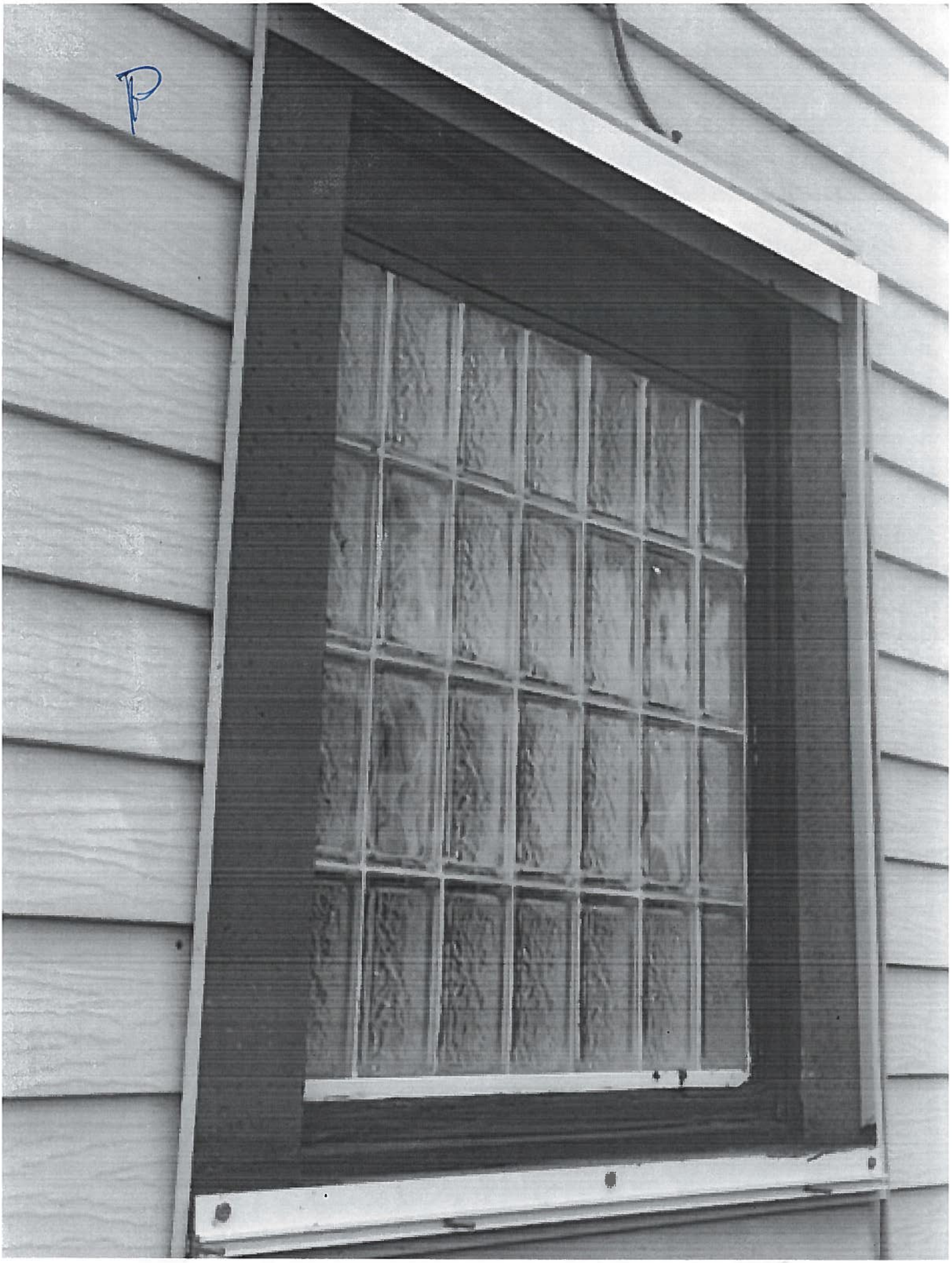
P

H & 6

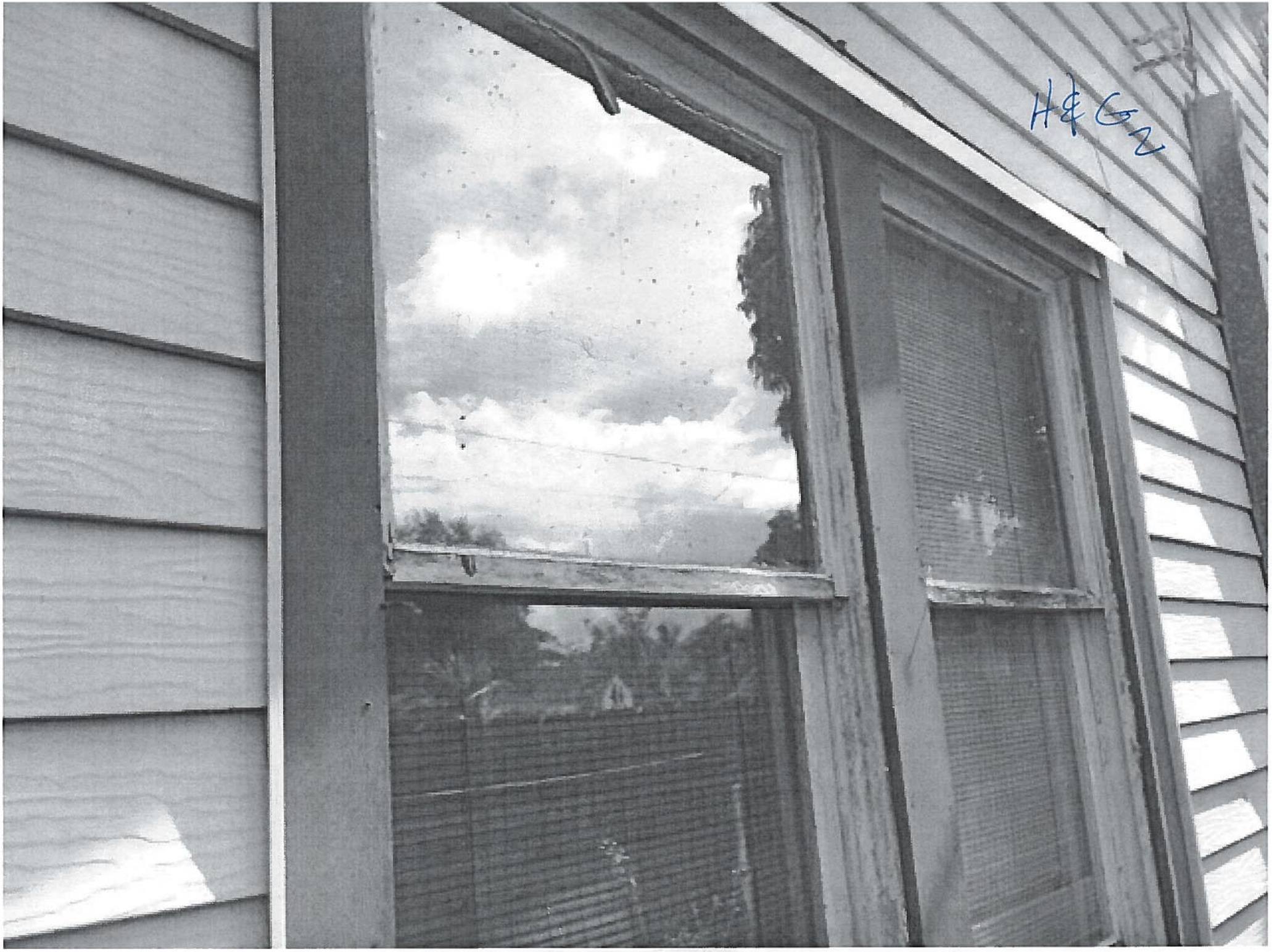
H&G2

H&63

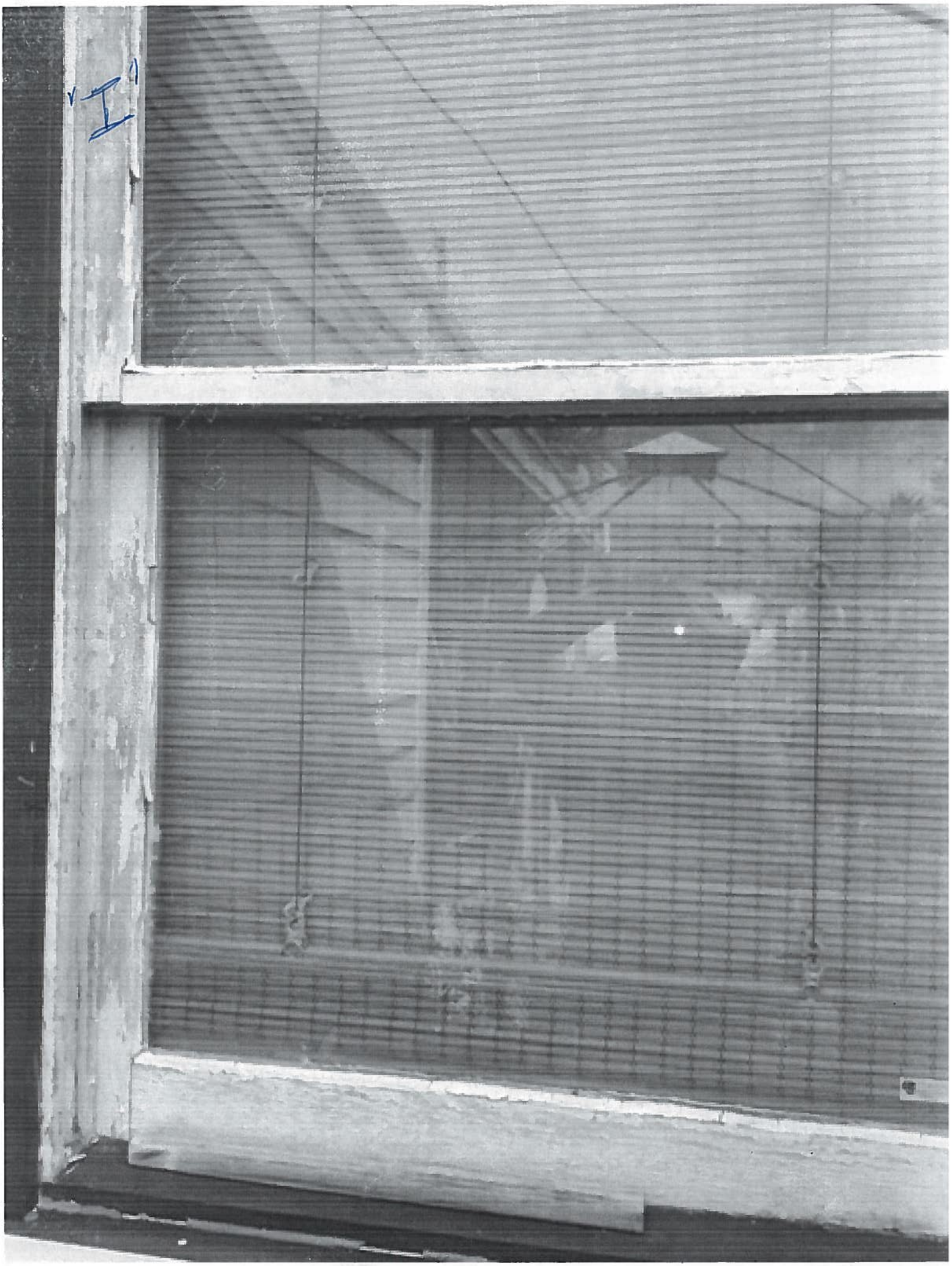

I/2

PATIO DOOR J

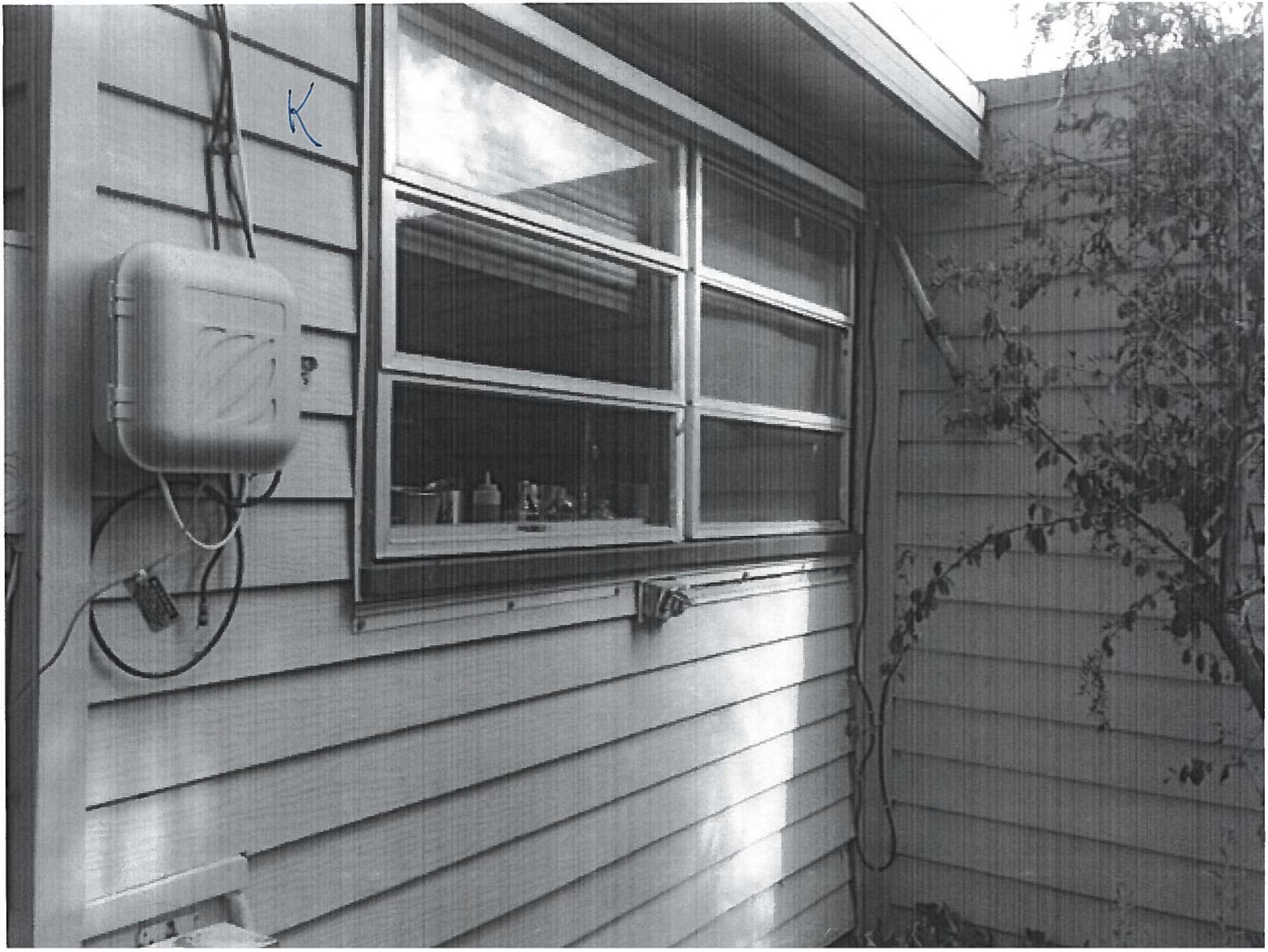
K

DOOR
L

N

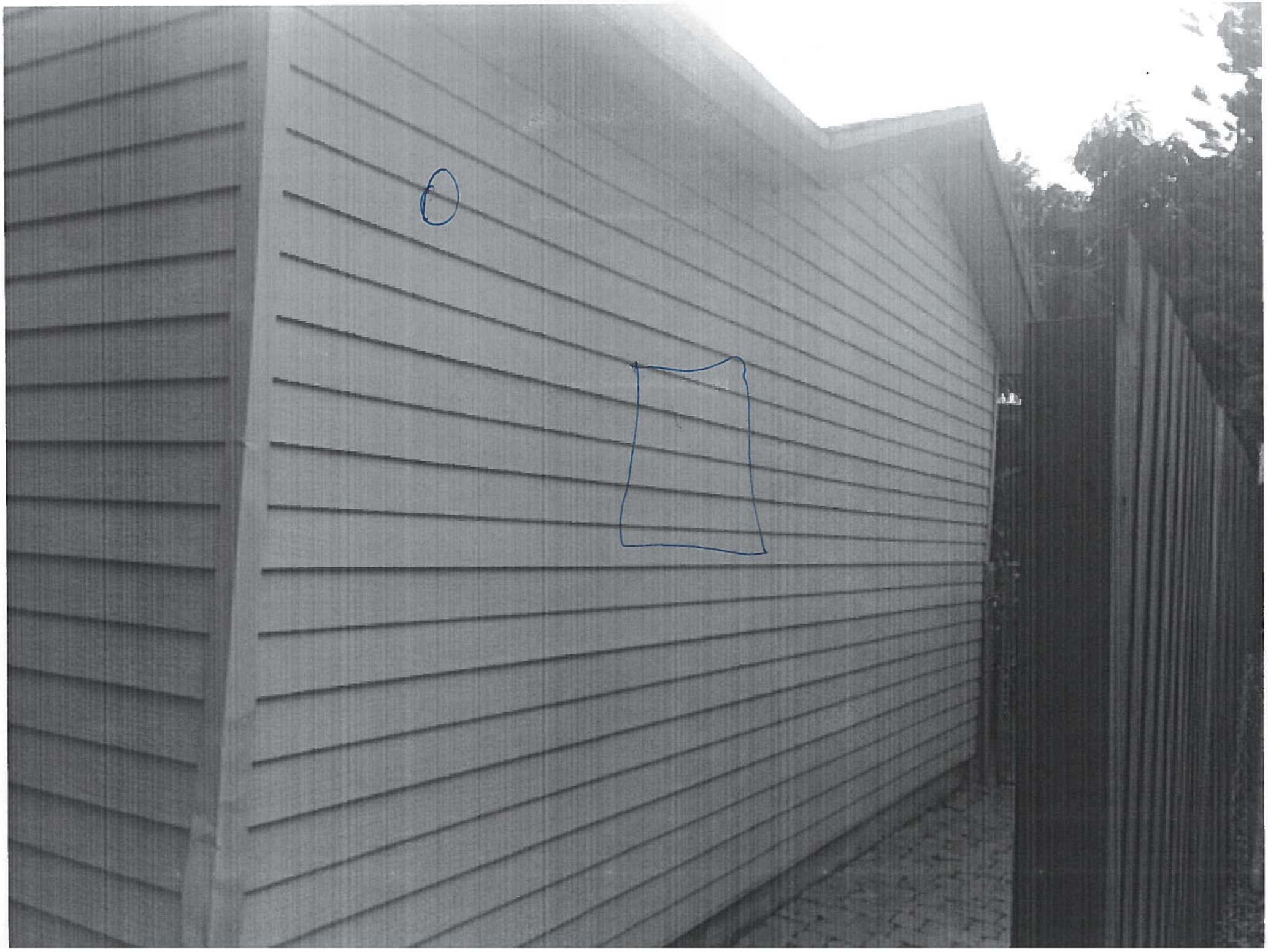

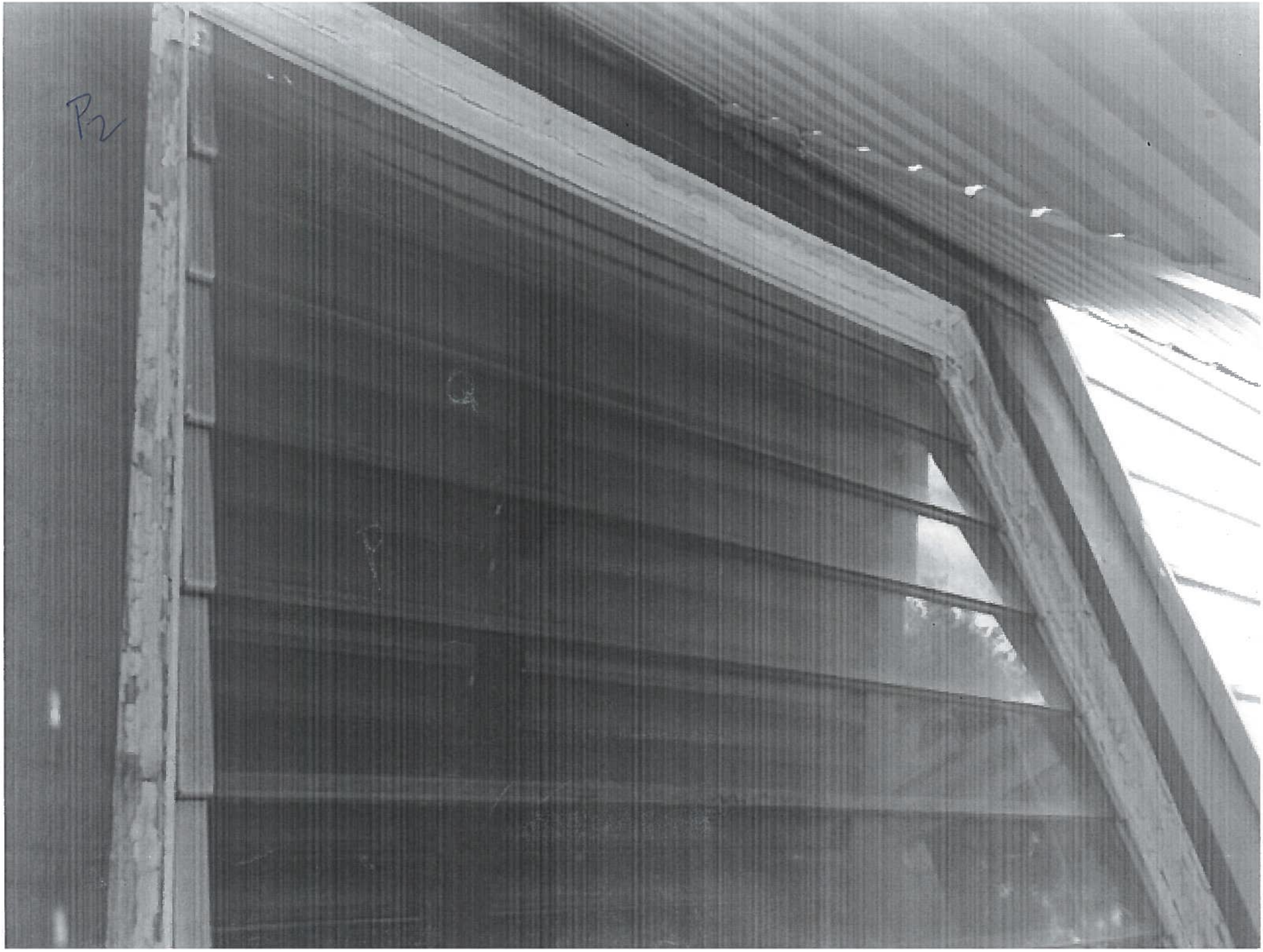
P2

Royal Palm Aluminum, INC.

PGT WinGuard®
Windows and Doors
French Doors
Storefront

RPA Impact Products, Inc.
License # SCC 131151182
425 INDUSTRIAL STREET, SUITE 6
LAKE WORTH, FLORIDA 33461
PHONE (561) 588-2520
FAX (561) 588-2522
EMAIL: rpaluminum@bellsouth.net

WinGuard SHOWROOM Sales & Installation

SOLD TO		
	Dan Cooney	Project Windows and Doors
		Address 1001 N. M st Lake Worth Fl. 33460
		Location
		Contact Dan Email Dancooney@rangerconstruction.com
	Date 08/22/16 Salesman Ken	Phone 561-719-0399 Fax

QTY	Size	Model	Type	Description	Finish	Glass Color	Glass Type	Screens	Location	**TOTALS**
4	37 x 50	SH	500	1/1	White	Grey/LowE	Impact	Yes	A,C	
2				mulls						
1*	2868	TBD	Entry	ALLOWANCE					B	($ 1,400)
1	34 x 50	SH	500	1/1	White	Grey/LowE	Impact	Yes	D	
4	35 x 55	SH	500	1/1	White	Grey/LowE	Impact	Yes	E,F,G,H	
1	6068	FD	550	1-lite	White	Grey/LowE	Impact	Yes	J	
2	37 x 37	SH	500	1/1	White	Grey/LowE	Impact	Yes	K	
1				mull						
1*	2868	Entry	DRS40	Half lite/operable	Primed	Clear	Impact	Yes	L	
1	28 x 35	SH	500	1/1	White	Grey/LowE	Impact	Yes	M	
1	24 x 36	SH	500	1/1	White	Grey/LowE	Impact	Yes	N	
2	34 x 53	SH	500	1/1	White	Grey/LowE	Impact	Yes	O	

All products PGT Vinyl WinGuard. Permit and engineering billed additional at cost. Please allow 4 weeks delivery.

Satin nickel hardware and stainless steel assembly screws included. Trim included. * ThermaTru or Plastpro doors

MATERIAL COVERED ON THIS QUOTE/CONTRACT REMAINS THE PROPERTY OF RPA, INC. WE RESERVE THE RIGHT OF REPOSSESSION WITHOUT NOTICE IF THE TERMS OF PAYMENT HAVE LAPSED.
Terms of Sale: DUE UPON MATERIAL DELIVERY
1. Repairs or glass broken by others is not covered in this bid.
2. General contractor is to be responsible for window guards.
3.Final balance will be invoiced upon installation of frames and/or glass. Delivery and/or installation of screening may be withheld for convenience of customer, but shall in no way affect date of amount due.
4. In the event that amount shown is not paid when due, interest at highest legal rate per annum shall accumulate on total amount remaining due. All costs of collection shall be paid by the customer including reasonable attorney's fees.
5. RPA shall not be responsible for delay resulting from strikes, labor difficulties, fires or other casualty, or any causes whatsoever beyond its control.
6.Exterior perimeter caulking included.
7.Installation performed bby RPA Impact Products, Inc. License #SCC131151182
8. RPA Installation warranty 1 year from delivery.
9. Quote is deemed valid for 90 days.

MATERIALS	$ 13,600
SALES TAX	Included
INSTALLATION	$ 5,100
TOTAL CONTRACT	$ 18,700
DEPOSIT	$ 6,700
MATERIAL DELIVERY DRAW	$ 11,000
INSTALLATION DRAW	$ 1,000

Accepted by: _____ Title: _____ Date: _____ Page: ___ of ___

Gary R. Nikolits, CFA
Property Appraiser
Palm Beach County

Homestead Exemption E-file

Owner Name: COONEY DAN
Parcel Control Number: 38-43-44-21-15-304-0160
Location Address: 1001 N M ST

Structural Element for Building 1

1.	Exterior Wall 1	VINLY/ALUM/CON SIDING
2.	Year Built	1941
3.	Air Condition Desc.	HTG & AC
4.	Heat Type	FORCED AIR DUCT
5.	Heat Fuel	ELECTRIC
6.	Bed Rooms	3
7.	Full Baths	1
8.	Half Baths	0
9.	Exterior Wall 2	N/A
10.	Roof Structure	GABLE/HIP
11.	Roof Cover	ASPH/COMP. SHG.
12.	Interior Wall 1	PLASTER
13.	Interior Wall 2	N/A
14.	Floor Type 1	HARDWD/PARQUET
15.	Floor Type 2	CERAM/QARY TILE
16.	Stories	1

Sketch for Building 1

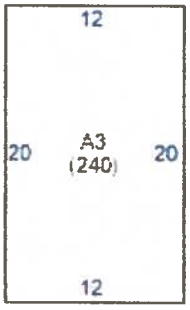

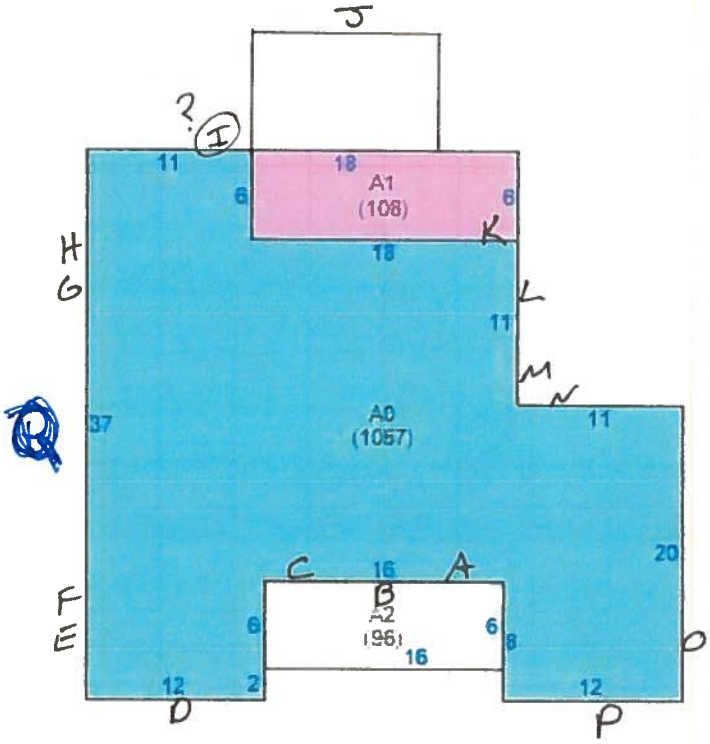

Subarea and Sq. Footage for Building 1

Code Description	Sq. Footage
BAS BASE AREA	1057
SFB SEMI FINISHED BASE AREA	108
SFB SEMI FINISHED BASE AREA	96
UDG UNFINISHED DET. GARAGE	240
Total Square Footage	1501
Total Area Under Air	1261

Extra Feature

Description	Year Built	Units
PATIO	1941	168
POOL - IN-GROUND	1941	84

Unit may represent the perimeter, square footage, linear footage, total number or other measurement of the feature depending on the feature described.

WINGUARD® VINYL FEATURES

Impact-Resistant Laminated Insulating Glass

A glass makeup that features an interlayer sandwiched between two pieces of glass to create a virtually impenetrable barrier. A third piece of glass offers enhanced insulation, further reducing your energy costs.

SecureConnect Technology*

PGT's SecureConnect technology integrates proprietary-designed corner keys into the sash of each window. This design system ensures the integrity and performance of every window no matter how large or small.

SnapLock

Just shut the window and PGT's SnapLock automatically locks into place with its 3-point locking mechanism.

ComfortLift Handles

PGT's ComfortLift handle provides fingertip operation when opening or closing the windows.

TrueHold Hinge

PGT's TrueHold hinge ensures that your Casement window, no matter how large, will maintain its smooth, effortless operation for years to come.

Aluminum Interlock

An integrated aluminum design feature that provides added strength and allows for larger sizes with higher design pressures.

*patent pending

Welded Frame Corners
SnapLock
Tilt Latch SecureConnect Technology
Aluminum Interlock
Exterior Glazed Laminated Insulating Glass
Welded Sash Corners
ComfortLift Handles
Pivot Bar SecureConnect Technology
Multi-Chamber Frame

WINDOWS

Single Hung

Double Hung

Single Hung (SH5500) and Double Hung (DH5560)

Constant force balance system

- Provides smooth, easy opening and closing

Spiral balance system

- Standard feature on larger window sizes ensures ease of sash operation
- Optional upgrade on any window size provides additional ease of sash operation

SecureConnect integrated corner keys

- For added sash strength

SnapLock auto lock

- Proprietary design includes multiple locking points and prevents intruders from unlocking window from exterior
- Provides peace-of-mind that lock is engaged when window is closed
- Low-profile design for minimal visual interruption

Tilt sash design

- For easy exterior cleaning

Embedded tilt latch

- For added strength in holding sash into frame
- Presents cleaner sight lines

Stylish ComfortLift handles

- Allows ease of operation & option to add style by selecting hardware finish
- Optional lift rail for alternative opening method

Beveled meeting rail

- Enhances visual appeal of profile

Configuration Options

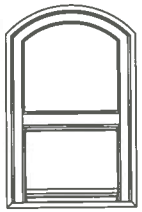

Single Hung
Radius Top
with Equal Sash

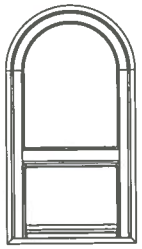

Single Hung
Arch Top
with Proview/Oriel Sash

Cottage & custom sash configurations available

★ See below

6'8" DRS40 FOUR PANEL BLANK TOP DOOR

DOOR WIDTHS

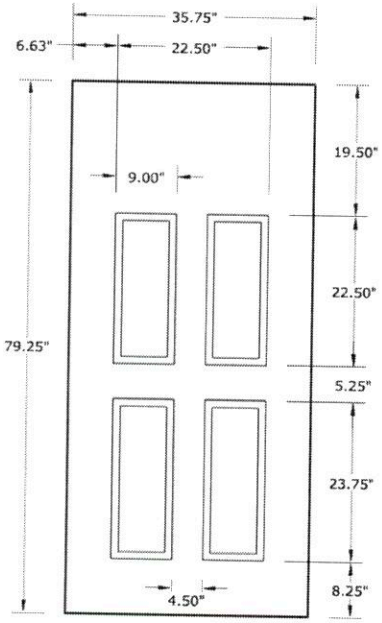

3' 0" x 6' 8"

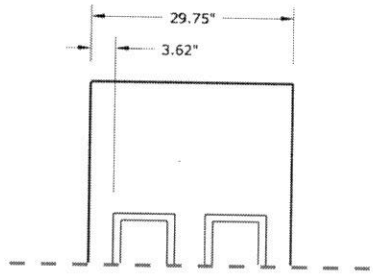

2' 6" x 6' 8"

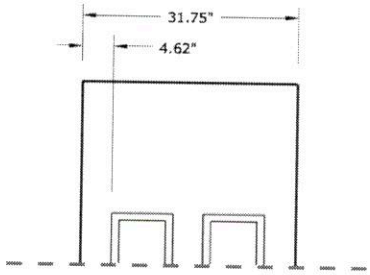

2' 8" x 6' 8"

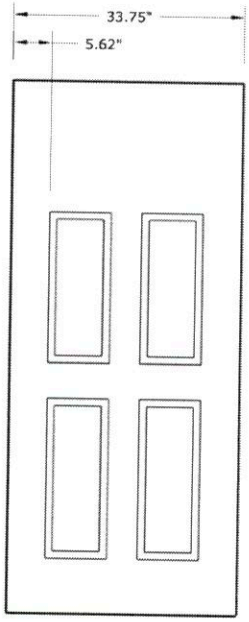

2' 10" x 6' 8"

NOTE: BY REQUEST, DOOR HEIGHT COMES IN VARYING DIMENSIONS TO A MINIMUM OF 79". EXCESS WILL BE TAKEN FROM BOTTOM RAIL. ALL OTHER DIMENSIONS WILL REMAIN THE SAME.

CUTOUTS & GLASS

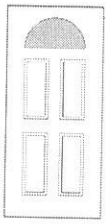

HALF ROUND LITE
HR1

ALL	cutout	23" x 11"
	glass	22" x 10"

A = 4.0"

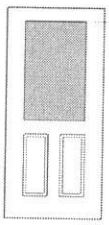

HALF LITE
HL4

2'8" 2'10" 3'0"	cutout	23" x 37"
	glass	22" x 36"

A = 5.0"

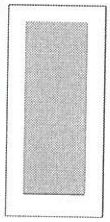

FULL LITE
FL7

2'8" 2'10" 3'0"	cutout	23" x 65"
	glass	22" x 64"

A = 6.0"

A = DISTANCE FROM TOP OF DOOR TO TOP OF CUTOUT

MATCHING SIDELITES

SLS60

Available Widths:
1' x 0"
1' x 2"

Spec Page = 170

SH5500

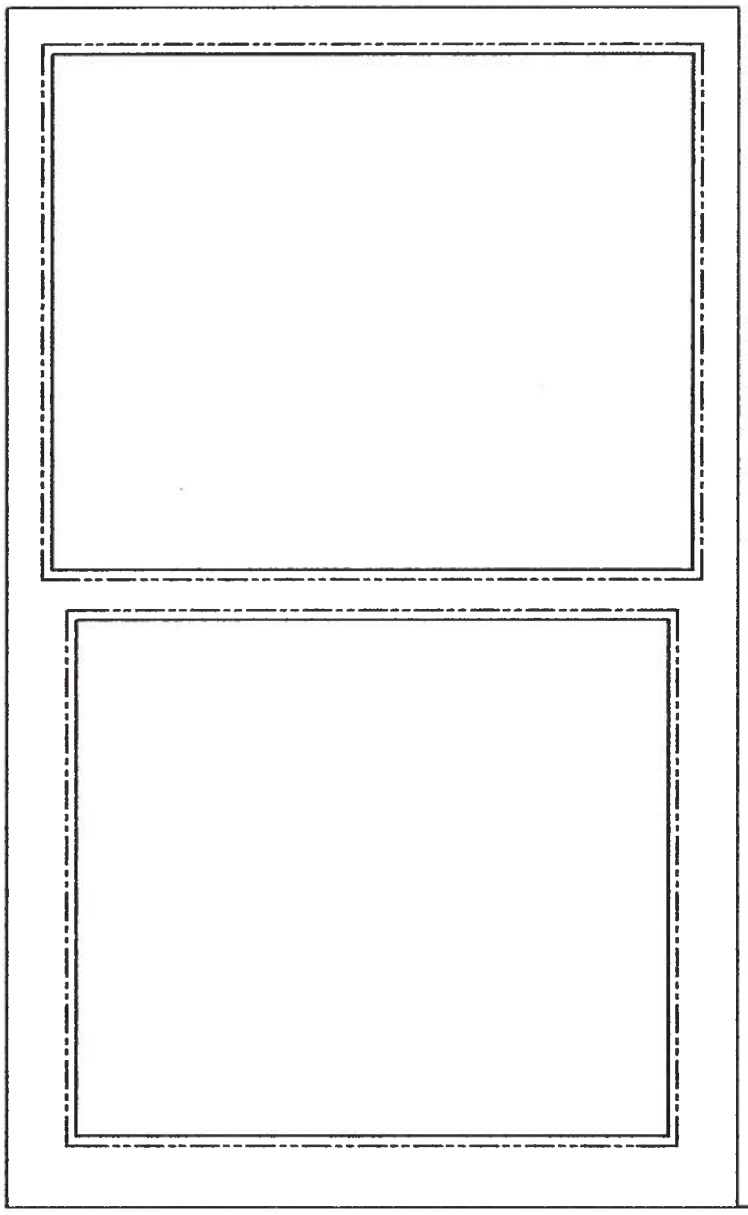

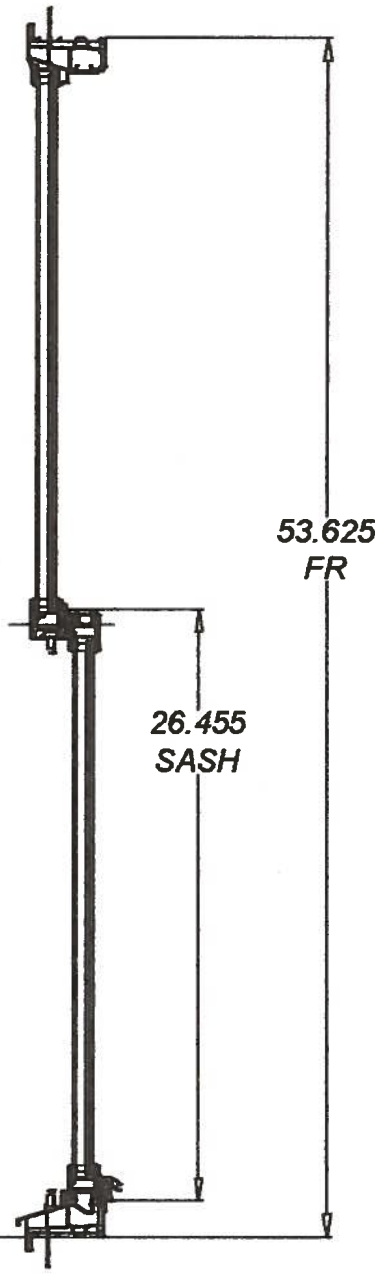

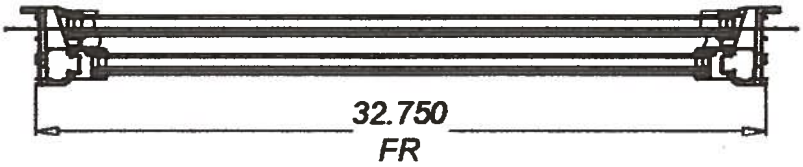

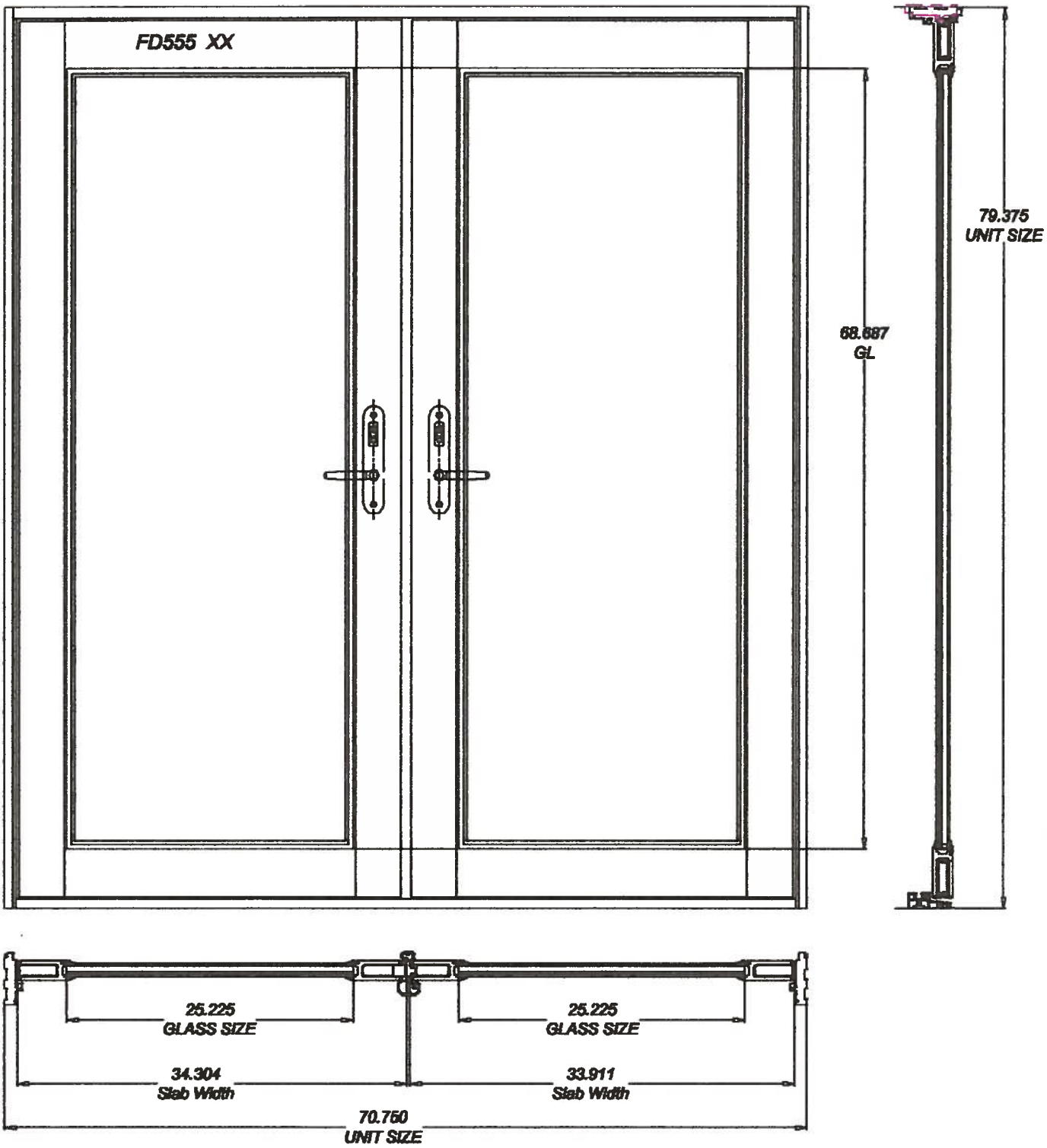
FD555 XX
79.375
UNIT SIZE
68.687
GL
25.225
GLASS SIZE
25.225
GLASS SIZE
34.304
Slab Width
33.911
Slab Width
70.750
UNIT SIZE

SH5500

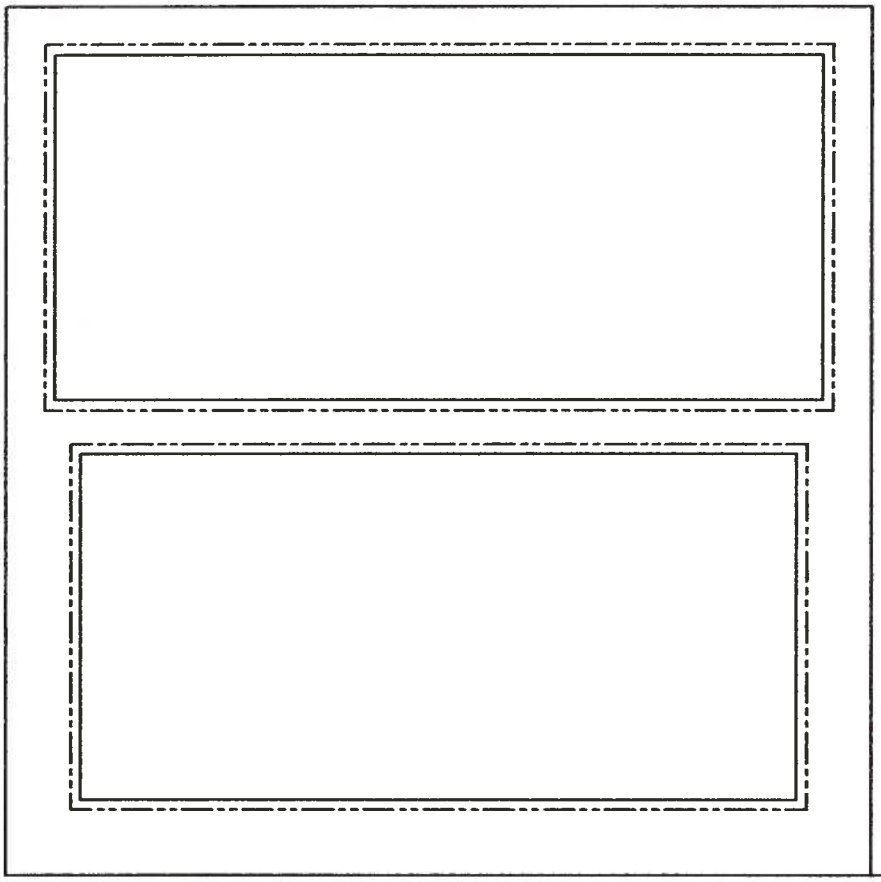

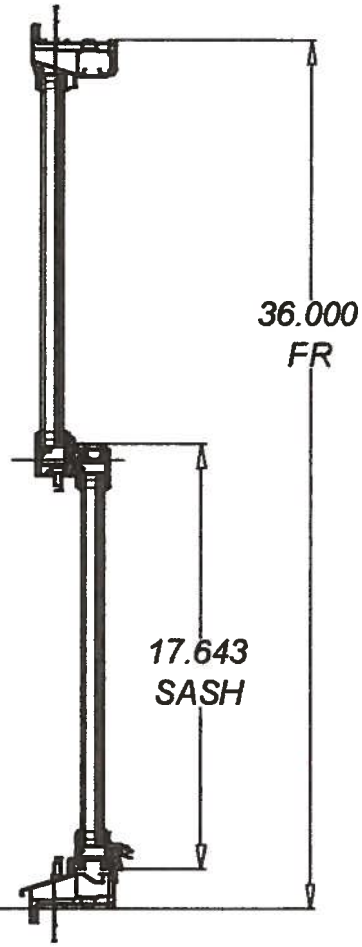

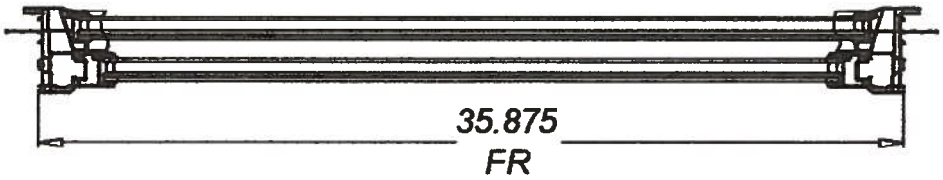

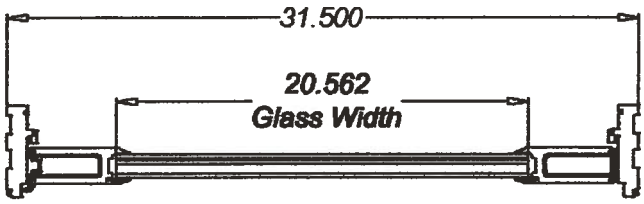
31.500
20.562
Glass Width

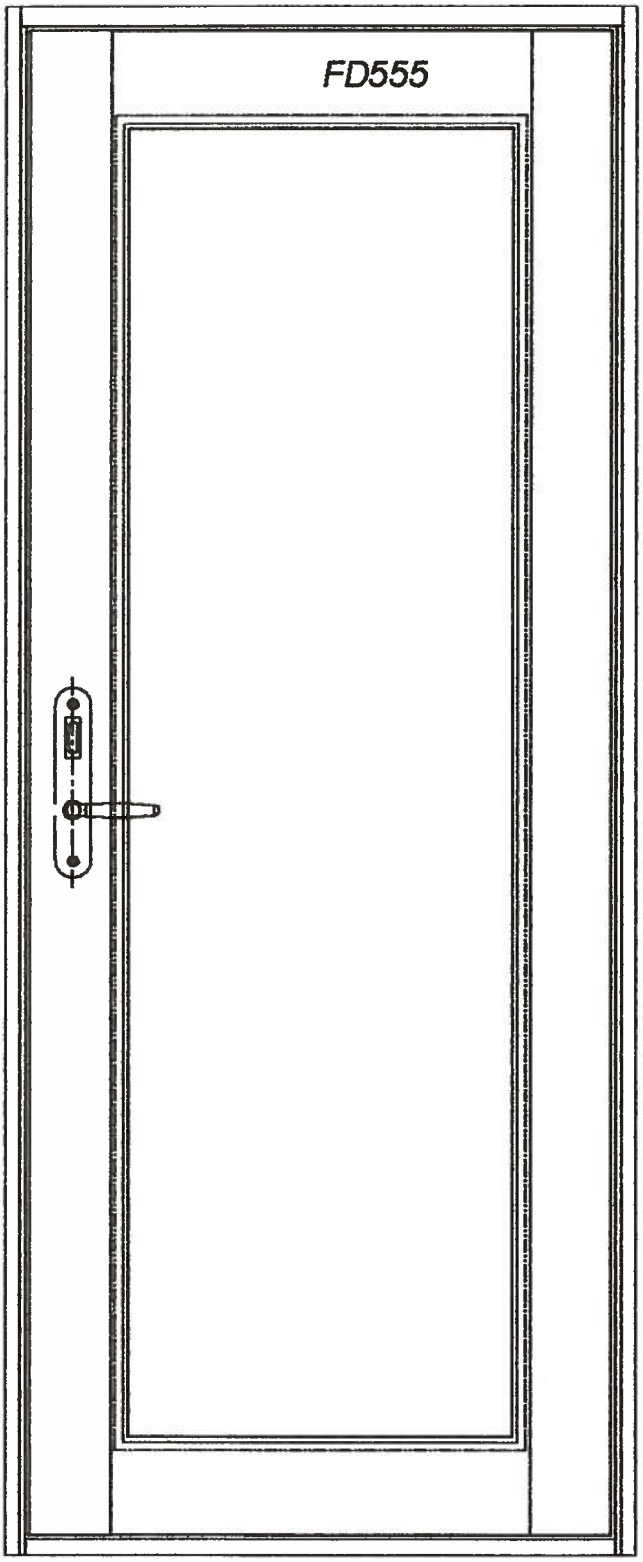
FD555

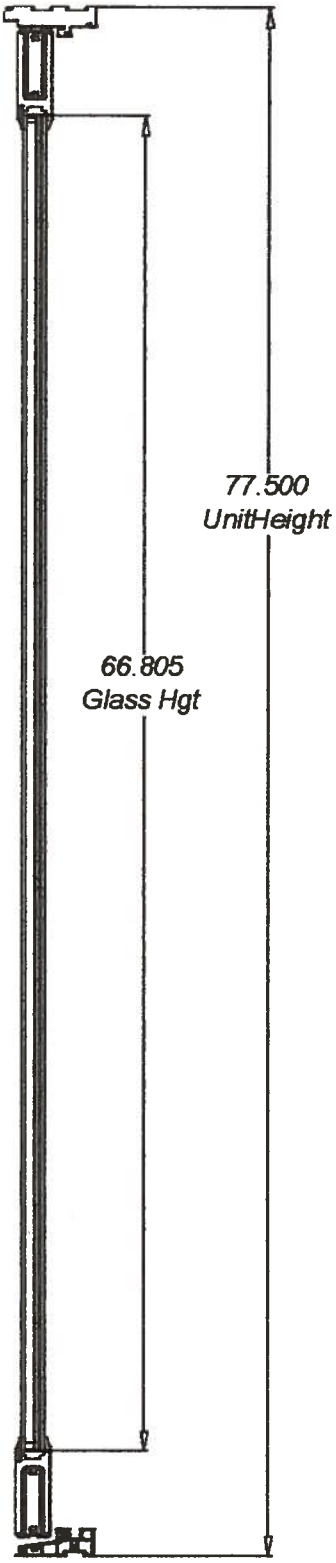
77.500
UnitHeight
66.805
Glass Hgt

SH5500

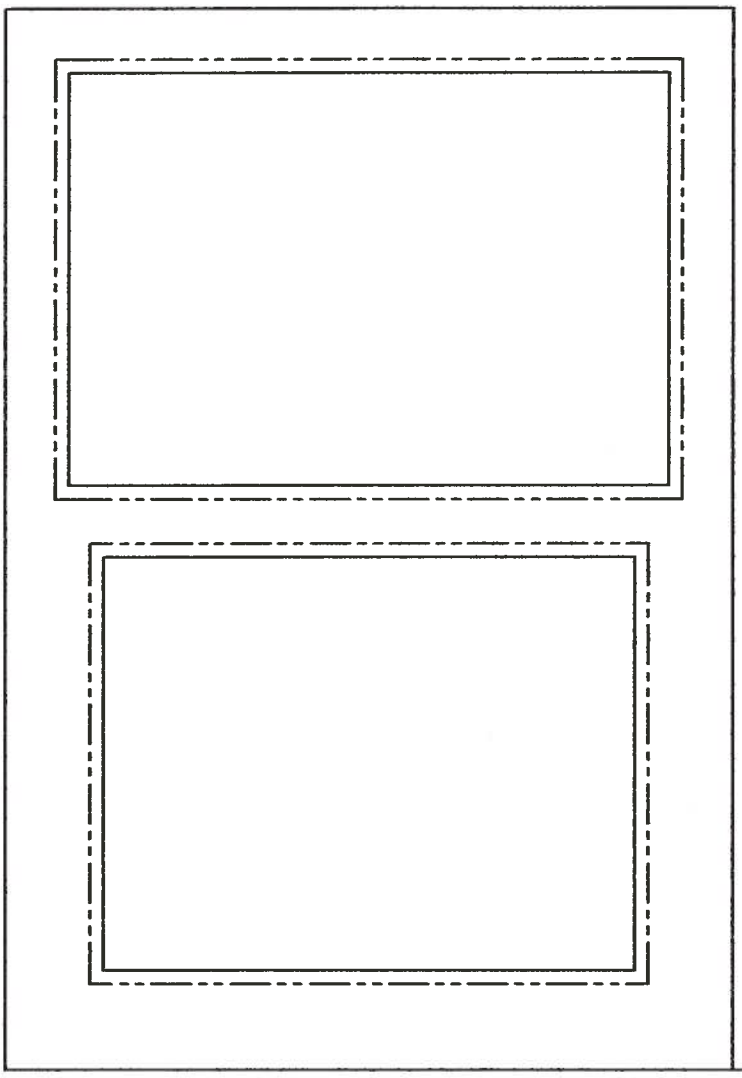

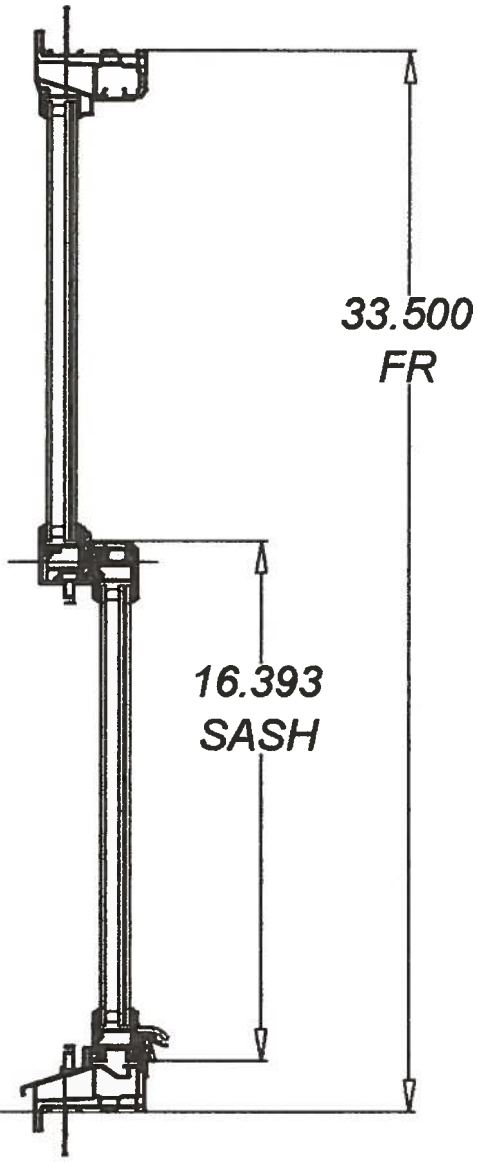

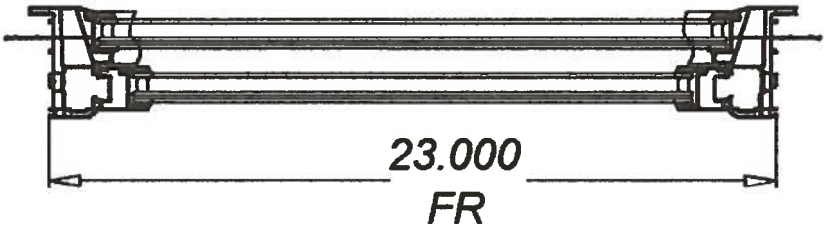
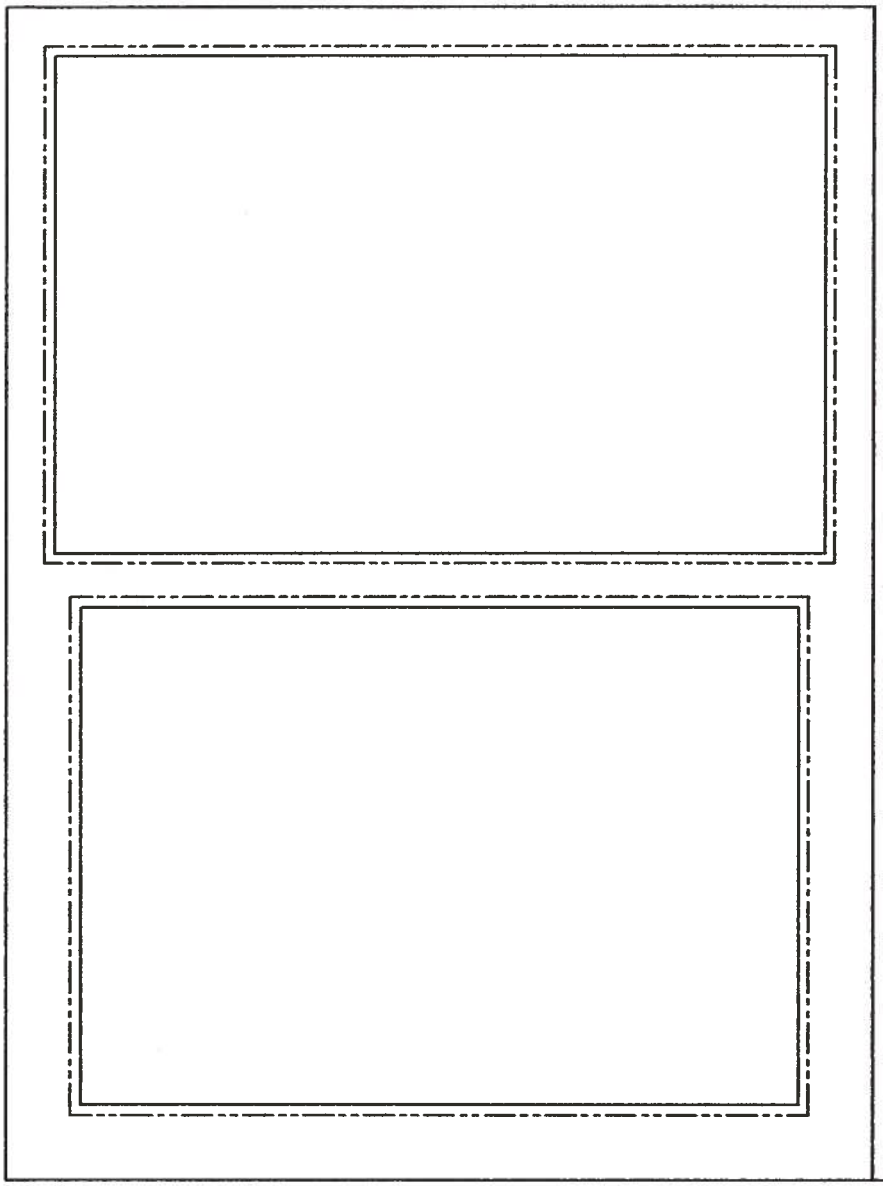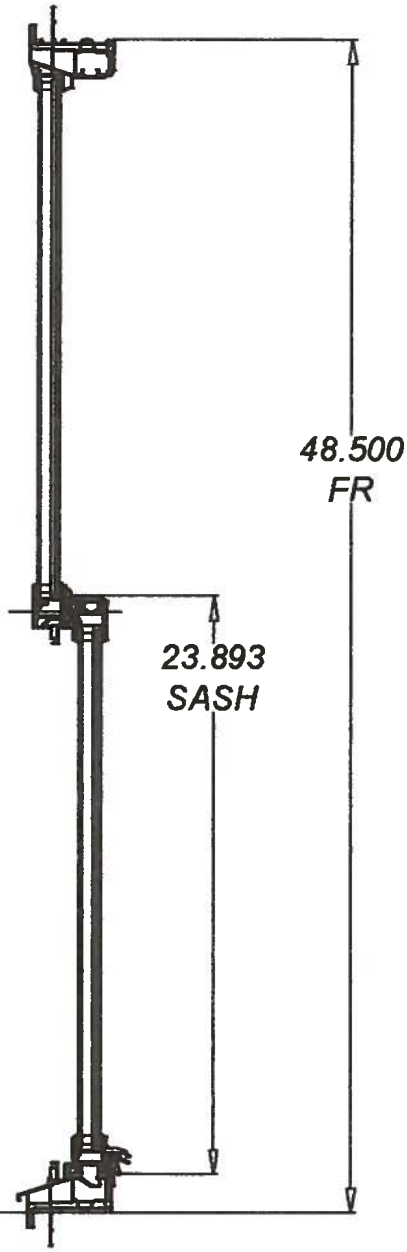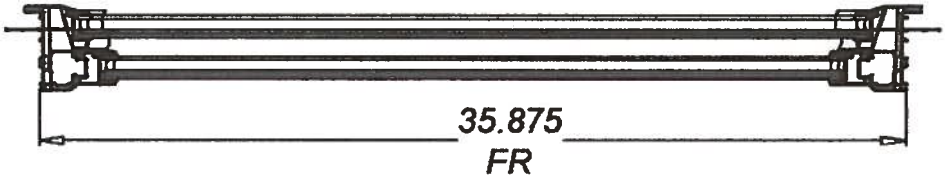
SH5500