CITY OF LAKE WORTH
1900 2nd Ave N · Lake Worth, Florida 33461 · Phone: 561-586-1687

Agenda
Regular Meeting
City of Lake Worth
Historic Resources Preservation Board
City Hall Commission Room
7 North Dixie Hwy; Lake Worth, FL

WEDNESDAY, APRIL 13, 2016 6:00 PM

1. Roll Call and Recording of Absences
2. **Pledge of Allegiance**
3. Additions/Deletions/Reordering and Approval of the Agenda
4. Approval of Minutes
   A. December 16, 2015 PZB/HRPB Joint Workshop
   B. February 10, 2016 RM
   C. February 17, 2016 Special Meeting
   D. March 9, 2016 RM
5. Cases
   A. Swearing in of Staff and Applicants
   B. Proof of Publication
   C. Withdrawals/Postponements
   D. Consent
   E. Public Hearings
      1. Board Disclosure
         a. Form 8B Recusal
   F. Unfinished Business

1. HRPB Project Number 15-00100231: Consideration of a Certificate of Appropriateness (COA) for roof replacement to the subject property located at 520 North Palmway, PCN# 38-43-44-21-15-164-0050. The subject building was constructed in 1939 and the property is a contributing resource within the Old Lucerne Local Historic District.

G. New Business

1. HRPB Project Number 16-00100071: Consideration of a Certificate of Appropriateness (COA) for window and door replacement for the main single-family structure located at 915 North K Street; PCN# 38-43-44-21-15-280-0130. The subject property was constructed in 1941 and is located within the Northeast Lucerne Local Historic District.

2. Review of City Initiated Demolition at 914 North M Street

3. HRPB Project # 16-02900002 for Consideration of a request by Stateside Partners LLC, for a Text Amendment to Section 23.3-14, Downtown (DT) and Section 23.3-6, the Permitted Use Table and Section 23.4-13 of the City's Land Development Regulations (LDRs), to allow Drive Through Facilities as a Conditional Use within the Downtown Zoning District specifically west of Dixie Highway.

6. Planning Issues

A. Discussion of Historic Preservation Case Studies

7. Public Comments (3 minute limit)

8. Departmental Reports

9. Board Member Comments

10. Adjournment

11. If a person decides to appeal any decision made by the board, agency or commission with respect to any matter considered at such meeting or hearing, he or she will need a record of the proceedings, and that, for such purpose, he or she may need to ensure that a verbatim record of the proceedings is made, which record includes the testimony and evidence upon which the appeal is to be based. (F.S. 286.0105)

NOTE: ALL CITY BOARDS ARE AUTHORIZED TO CONVERT ANY PUBLICLY NOTICED MEETING INTO A WORKSHOP SESSION WHEN A QUORUM IS NOT REACHED. THE DECISION TO CONVERT THE MEETING INTO A WORKSHOP SESSION SHALL BE DETERMINED BY THE CHAIR OR THE CHAIR'S DESIGNEE, WHO IS PRESENT AT THE MEETING. NO OFFICIAL ACTION SHALL BE TAKEN AT THE WORKSHOP SESSION, AND THE MEMBERS PRESENT SHOULD LIMIT THEIR DISCUSSION TO THE ITEMS ON THE AGENDA FOR THE PUBLICLY NOTICED MEETING. (Sec. 2-12 Lake Worth Code of Ordinances)

Note: One or more members of any Board, Authority or Commission may attend and speak at any meeting of another City Board, Authority or Commission.

All project-related back-up materials, including full plan sets, are available for review by the public in the Planning, Zoning and Historic Preservation Division located at 1900 2nd Avenue North.

CITY OF LAKE WORTH
1900 2nd Ave N · Lake Worth, Florida 33461 · Phone: 561-586-1687

Minutes
Workshop Meeting
City of Lake Worth
Planning & Zoning Board
Historic Resources Preservation Board
City Hall Commission Room
7 North Dixie Hwy; Lake Worth, FL

WEDNESDAY, DECEMBER 16, 2015 6:00 PM

1. Roll Call and Recording of Absences: Greg Rice, Planning & Zoning Board (P&ZB) Chair called the meeting to order at 6:05pm. Aimee Sunny, Preservation Planning Coordinator, called the roll.
   Members of the HRPB present: Herman Robinson, Chair; Darrin Engle, Vice-Chair; Judith Just; Loretta Sharpe, and Erin Fitzhugh Sita.
   Members of the P&ZB present: Mr. Rice; Mark Humm; Elise LaTorre; Anthony Marotta; Dustin Zacks; and Cindee Brown.
   Also present were Brian Shutt, Assistant City Attorney; William Waters, Director for Community Sustainability; Maxime Ducoste, Planning & Preservation Manager; Aimee Sunny, Preservation Planning Coordinator; and Curt Thompson, Community Planner.

   Absent: Jimmy Zoellner and Tom Norris, HRPB Members
   Dean Sherwin, P&ZB Member

2. **Pledge of Allegiance**

3. Planning Issues

   A. Land Development Regulations: Proposed Amendments

   - Mr. Ducoste presented that the first proposed amendment, is to clarify the allowed location of an accessory structure. The proposal will require accessory structures to be located behind the main structure, and would disallow the accessory structure between a public road and the main structure.
   - Ms. Fitzhugh Sita requested a clarification as to whether or not a variance could be obtained for the accessory structure regulations, and expressed concern over historic properties that are located at the rear of the property, with no room for an accessory structure except for the front of the house.
   - Mr. Waters answered that the owner could still request a variance in order to install the accessory structure in front of the main structure, and could request a historic waiver for the setbacks in a Historic District.
   - Mr. Engle questioned the costs of a variance, Mr. Ducoste clarified that the cost for a residential variance is $350.

- Mr. Ducoste clarified that the amendment, the accessory structure must maintain the same setbacks as the principal structure, and shall not be located between the primary structure and a public right of way. (06:20 PM)
- Updated the definition of foot candle and changed the unit of measure to lumens.
- Mr. Ducoste presented that the definition for pharmaceutical and medicine is proposed to be included.
- Mr. Marotta asked for clarification of the types of businesses that would need to take advantage of this new definition change, and Mr. Ducoste clarified that there is a type of business that might collect medical waste from companies. Mr. Waters added that this type of use might only be allowed in the IPOC, however it would have strict requirements from the FDA and other regulating bodies, and it would need to follow the provisions of the Permitted Use Table.
- Ms. Fitzhugh Sita questioned the potential location of the pharmaceutical and medicinal businesses, and whether or not this definition could be extended to allow medical marijuana dispensaries and similar type uses. She questions whether or not Lake Worth wants to allow this type of marijuana distribution center.
- Ms. Just commented that she would not want to see a research center allowed that would be able to use research animals in the City. Mr. Ducoste responded that he would not want to limit the laboratory use to preclude animal testing, as many laboratories do use this type of research. Mr. Waters further clarified that the Staff would collaborate with the City Attorneys to discuss further provisions that might preclude animal testing. The Board further requested the definition clarified to discuss animal and human testing facilities, blood testing facilities, and other types of resource testing.
- Mr. Engle and Mr. Waters discussed a potential blood testing or collection center on Federal Highway, and whether or not that would be allowed. (06:35 PM)
- Mr. Waters presented the proposed changes to the courtesy notice and mailing requirements; the proposed table is in excess of Florida Statute requirements; and clarifies the time period and the type of notice that is required based on the type of project.
- Ms. Fitzhugh Sita requested that Staff check on the Florida Statute requirement for Future Land Use Amendments, as she believes it to be 10 days instead of 5.
- Exhibit C – Mr. Ducoste presented that this is a housekeeping issue, to clarify the permitted use table allowances, up to 7,500sf rather than 10,000sf.
- Exhibit D – Mr. Ducoste presented that the lighting code is being updated to use lumens as the unit of measure rather than foot candles.
- Mr. Engle mentioned that the number of foot candles allowed should be adjusted to reflect the correct number of lumens.
- Exhibit F – Mr. Ducoste presented the proposed changes to the Sign Code; the change is to allow both temporary and permanent signs at 3 feet from the side property line.
- Exhibit G – Mr. Waters presented that these are proposed amendments to the landscape code; the residential code is good as it exists in the code, however the commercial code needs additional information added to address parking lots, setbacks, and impervious area, the types of trees required in these areas, how many trees are required per square foot, and additional clarifications regarding the Department responsible for the review process. Further changes are proposed to be presented in the future, to address issues relating to the penalties for trees, and discussion of invasive species.
- Mr. Rice questioned the code enforcement, fees, and fines process for sprinkler systems that are running while it is raining, and Mr. Waters responded with the process for addressing those code enforcement issues.
- Ms. Fitzhugh Sita pointed out a Scribner's error in the proposed landscape code.

- Mr. Engle questioned whether or not the code clarifies the use of 3 palm trees as shade trees, and Mr. Waters clarified that it does.
- Mr. Waters presented that the ACE group has taken on the task of presenting alterations to the home occupation provisions. The existing code has not been significantly updated for some time, aside from a minor amendment, to allow up to (3) home occupations per residence.
- The current proposal allows for a much greater spectrum of home occupations, and expands upon the types of uses allowed as home occupations. The ACE group would like to allow home occupation uses anywhere in the City, which is a substantial change from the current regulations. The proposal is a very progressive approach to home occupations, and that Staff does have many concerns with the proposal. Issues from Staff include how to enforce the expanded provisions, clarification for the levels of review would work. Many of the artisans in the community perhaps cannot afford a separate studio space, and would like to have a small scale business in their residence. Mr. Waters further clarified that currently these uses are allowed in the Mixed Use Districts, but not the Residential Districts. This proposal effectively allows commercial activities in the residential areas. (07:00 PM)
- Mr. Waters outlined the proposal from ACE, and included Staff concerns and comments. Mr. Waters mentioned that an updated business tax receipt study is needed, as the current study is outdated, and would not properly address the types and levels of home occupations that are being presented.
- Mr. Rice questioned whether or not the proposed changes to the home occupations code would affect the homestead exemption from the Property Appraiser.
- Mr. Waters presented that if the home occupation code changes being presented were adopted, it would be the most liberal Code in all of Palm Beach County.
- Mr. Rice clarified whether or not these provisions would apply to multi-family residences.
- Ms. Fitzhugh Sita commends the ACE group for their work on putting a proposal together, however she does feel that the extent of the proposed changes is significant, and is not meeting the intent of the Comprehensive Plan. She questioned the compatibility of these uses in the residential areas, and the fact that the proposal effectively converts the entire City to a Mixed-Use district. For the administrative uses, she feels that the hours of operation are too late, the signage is too large, and the outdoor storage would create mosquito issues, and would greatly impact the quality of life of neighbors. Further, she feels that these changes are significant enough that they would require a separate visioning process, and discussions with all of the neighborhoods. She would also question how enforceable these changes would be, with regards to parking, the number of employees, the number of visitors, etc.
- Mr. Waters expressed concerns over enforcement of the parking and traffic generation standards as they are defined in the proposal.
- Ms. LaTorre questioned whether or not the City has a survey or inventory relating to the parking that is required, and how many lots are in compliance with the parking regulations. Mr. Waters responded that an applicant for a home occupation would be required to submit documentation showing how the parking would be provided to meet the needs of the business. Ms. LaTorre further commented that she would worry about the enforcement of the parking issues, and who a homeowner would contact if a neighboring home occupation was creating a parking problem in the area.
- Mr. Waters discussed issues relating to the special events and the impact of those.
- Mr. Waters suggested that there is an interest in amending the sign code, and that there is some interest in having a standard sign City-wide for Sales, Rent, and Businesses.

- Mr. Marotta questioned the process for residents proposing alterations to the Code. Mr. Waters responded that in this case, a formal application has not been submitted for this code, however, he felt it was necessary to allow the Board a chance to comment on this proposal.
- Ms. Just questioned whether or not the Arts Overlay district is still in existence. Ms. Just expressed further concern over turning the entire City into a mixed-use district.
- Ms. LaTorre questioned whether or not certain food-type businesses would require a health inspection, and any licensing from the state, whether or not there would be any requirements for sales.
- Ms. Fitzhugh Sita questioned the hours of operation for the existing mixed use districts.
- Mr. Marotta questioned whether or not the electric rates would be commercial. Mr. Waters indicated that because the home occupation would not occupy more than 49% of the structure, the structures would still be considered residential, not commercial. Mr. Marotta further expressed concern over the fact that a Code Enforcement officer is not able to enter a property unless permitted by the owner, and they cannot cite a property unless they can observe the violation; therefore, it would be very difficult to even enforce the number of people and the type of use at the property.
- Mr. Rice noted that Lake Worth has a large number of rental properties, and that most landlords prevent businesses uses in their rental properties, and he questions whether or not this Code would allow a tenant to have a business even if the lease does not allow it, and further whether or not insurance would be required to cover the commercial-type use. From a liability standpoint, Mr. Rice expressed that he feels that proper insurance is required.

Public Comments (8:08 PM)

- April Krebs, 130 South Lakeside Drive – She will benefit from the changes proposed, and asks that the changes be made in order to update the home occupation Code. She does not currently have a business, but she is an artist, and would be interested in having an art based business.
- Doctor Quan Cao, 19910 Villa Lante Place, Boca Raton, FL - He teaches at the University, and travels to do consultations throughout the country, and he is glad that Lake Worth is encouraging the community to be an integral part of the City.
- John Szerdi, 217 South Palmway – Feels that this is an interesting proposition to discuss, he has a 10-unit apartment next to him, and it does not have any parking. His street is already challenged for parking, and he can't imagine if any or all of the apartments were to have a large commercial venture, it would be extremely difficult to find parking. He also does not believe it to be compatible with the Historic District, and the types of uses that were historically compatible in the districts. He feels that this is a large leap from the current regulations, and that although he does wish to encourage small start-up businesses and an incubator-type setting, he does not think that this proposal is appropriate for the City as a whole.
- Nina Kauder, 1809 N Palmway – She is a teaching chef, and goes around to places like Mounts Botanical to teach classes, and would greatly enjoy being able to teach in her own home. She specifically grows her own vegetables, composts, and is a model for sustainable business. Her current business in Boynton Beach is located in a Culinary business incubator building, in a commercial setting.
- Kim Wallant, 2393 Crawford Court, Lantana, FL – She loves Lake Worth, and frequents the arts and businesses in Lake Worth, she is an art and play therapist, and she would like to continue her business in a residence in Lake Worth. She would suggest that if occupational

licenses are allowed in a specific area, and they are limited to a smaller series of uses, the new uses could be allowed, and taxed, and those tax fees would help to fund extra enforcement officers. She also feels there should be a difference between education and sales type functions.

- Erica Skolte, 1322 North K Street – She started a business when her job was threatened, she started doing the things she needed to, in order to brand and begin her business, she wanted to make t-shirts, jewelry, and painting.
- Michael Fox, 1609 N D St – He would like to do art appraisal out of his house, and he wants to do things by the law. He stated that the ACE group has approximately 300 people, who are supporting this effort. He states that the Ordinance will cost the City very little, and that this can carry the City into a new economy, where almost 30% of all businesses are run from the home, and have had a very positive impact in the economy. He stated that cities such as Portland, Asheville, and Santa Fe.

Elise LaTorre left the dais at 8:29PM.

- Vee Corallo, 1500 Lucerne Ave #906 – Is for the ACE proposal.
- Elise Crohn, 11 2nd Ave S – ACE has been meeting for almost a year, and has researched this heavily, and has read the Code for over 100 cities. She found that often the cities most known for being vibrant cities, have very progressive home occupation codes. She stated that the American Planning Association has written a model ordinance for home occupations, and they use that language as a basis for this ordinance. She stated that she called many different Cities and spoke with them regarding the issues that were discussed tonight.
- Sander Schrantz, 210 S M St – He feels that the group is seeking to work with Staff and the community, and that he hopes people will give them consideration. Currently, he feels there are many issues with the types of allowed activities under the Code. Allowing these types of uses, would promote Lake Worth as an incubator for economic growth and promote small businesses.
- Beth Schrantz, 210 S M St – The Code language presented was part of a smart growth, sustainable model, micro-entrepreneurship, while maintaining the residential character of the neighborhoods. She understands the concerns, and does not wish to have parking issues near her residence either. She wants to see the community grow stronger, and work together to achieve a better home occupation code.
- Katie Curtis, 219 S L St – She is not an artist, but a realtor. She feels that this initiative in inventive and exciting, and she supports it.
- Marty Welfeld, 829 N Lakeside Dr – Statistically the vast majority of artists in the US have another job, as it is very difficult to make a living as an artist. He finds the proposal tonight very interesting, and although he finds it to be too invasive. He notes that in order for one group of people to gain the rights to these types of businesses, another group of people has to lose their rights. He is not interested in giving up his expectations of living in a residential neighborhood. He feels that it would be far superior to create an arts area, in order to concentrate their efforts.
- Teresa Miller, 829 N Lakeside Dr – She is concerned that no one in her neighborhood has heard about this. She had a home business, and states that there is a big difference between a small home office, and a home retail or commercial business.
- Peggy Fisher, 508 N A St – She lives in a single-family neighborhood, and she does not feel that this meeting was properly noticed as to the content of the meeting and the impact it would have on the residents of the City. This proposal affects the entire City, and the entire

City should be made aware of this change. Parking is a huge issue in this City, and she worries that these new businesses will create a substantial parking problem

- Loretta Sharpe – She is delighted to see the young people in the meeting tonight, but she is completely opposed to the proposal as presented tonight. She feels that this group needs to first present this to all of the neighborhood organizations, and gain their feedback. She feels that the Board should not even look at this until the proper notices
- Mark Humm – No comment at this time.
- Dustin Zacks – This is the largest group at a meeting that he has seen is quite a long time. His concerns going forward; 1- the parking problem he does not see how we could get around it, especially with up to 10 visitors, 2- the one-size fits all approach to this proposal all over the city, 3- there are only a few properties that would qualify for the most intense use, are likely the houses that are farther away from the Downtown, and likely they live there for the peace and quiet. He feels that some of the businesses suggested could be appropriate and allowed, such as art appraisal. He would recommend making the proposal significantly morestrict.
- Mr Marotta – He understands the need for updates to the home occupation ordinance, and he is worried about the significance and impact of the proposal for home occupations. He stated that the parking issues are substantial. He does not feel that a City-wide ordinance is really going to work.
- Cindee Brown – Parking is a big issue, and the proposal is far too broad for her preferences. She is concerned that there are vacant buildings in downtown, and would prefer to see the traffic in those downtown buildings.
- Judith Just – The dynamics of being employed have changed significantly in this country, and she understands and appreciates that, and she does think that should be looked at. However, she is concerned with the volume and extent of the proposal.
- Darrin Engle – He commends the ACE group for being present tonight. He stated that he knows the group is reaching out to the various neighborhoods. He feels that Level 3 is a very intense use, and wonders if the other cities that employ a similar code are city wide. He would be worried about retail services in the neighborhoods, such as a beauty salon, or bakery. He worries about enforcement of abuse of the ordinance. He does feel that some degree of what ACE wants should be allowed here, just in an amended form.
- Erin Fitzhugh Sita – She thinks that it is very impressive that ACE is presenting a Code change. She feels that the Level 3 use is in violation of the Comprehensive Plan, but that Level 2 could have promise. The Arts Overlay district could be worth considering. She has significant concerns over outdoor storage, the tropical climate, and the enforcement. Parking is also an issue, particularly in the historic districts, where adding large amounts of parking and signage would be incompatible with the historic nature of the structures.
- Herman Robinson – we live in a great country where a group of people can have such an impact on their community. He feels we are innovative in Lake Worth, and he hopes that we can work to encourage that innovation. He is not in favor of signage in residential areas. He worries that enforcement will be very difficult in the residential areas. He thinks that a co-op would be an excellent idea.
- Greg Rice – He is appreciative of the presentation and the proposal tonight. He is very active in the neighborhood associations, and he highly recommends going out to the various neighborhoods to present this information. He feels that we all love Lake Worth, and we all want to see this as a great, thriving, community.

Meeting adjourned at 9:25pm.

4. **Attest:**

□□□□□□□□□□□□□□□□□□□□□□□□□□□□□□□□□□□□
Herman Robinson, HRPB Chairman

_____
Greg Rice, PZB Chairman

5. **Submitted by**:

□□□□□□□□□□□□□□□□□□□□□□□□□□□□□□□□□□□□
Aimee Sunny, Preservation Planning Coordinator

6. **Minutes Approved**:

□□□□□□□□□□□□□□□□□□□□□□□□□□□□□□□□□□□□□□
Date

CITY OF LAKE WORTH
1900 2nd Ave N · Lake Worth, Florida 33461 · Phone: 561-586-1687

Agenda
Regular Meeting
City of Lake Worth
Historic Resources Preservation Board
City Hall Commission Room
7 North Dixie Hwy; Lake Worth, FL

WEDNESDAY, FEBRUARY 10, 2016 6:00 PM

1. Roll Call and Recording of Absences
   The meeting was called to order by the Chairman.
   Present: Herman Robinson, Jimmy Zoellner, Tom Norris, Judith Just, Darrin Engel
   Also present were: Aimee Sunny Planning Preservation Coordinator; Maxime Ducoste Planning & Preservation Manager; Carolyn Ansay, Board Attorney; Sherie Coale Board Secretary.
2. **Pledge of Allegiance**
   Led by Chairman Robinson. Also noted the contributions of Board member Loretta Sharpe. Known for her zest for all things Lake Worth.
3. Additions/Deletions/Reordering and Approval of the Agenda
   Motion to approve the agenda: J.Zoellner, 2nd J. Just.
   Vote: Ayes all, unanimous.
4. Approval of Minutes
   Postpone approval of minutes until next meeting.
   A. October 2015 Meeting Minutes

   B. November 2015 Meeting Minutes

   C. January 2016 Meeting Minutes

5. Cases

   A. Swearing in of Staff and Applicants
   Staff and applicants were sworn in by Board Secretary.
   B. Proof of Publication

      1. Lake Worth Herald
         Motion to accept the proofs of publication: J. Zoellner and 2nd J. Juste
         Vote: Ayes all, unanimous

   C. Withdrawals/Postponements: None

   D. Consent: None

E. Public Hearings

1. Board Disclosure: None

a. HRPB Project Number 15-00100209: Consideration of a Certificate of Appropriateness (COA) for new construction of a rear accessory garage, for the single-family structure located at 525 North Palmway; PCN# 38-43-44-21-15-162-0110. The subject property was constructed in 1939 and is a contributing resource within the Old Lucerne Local Historic District.
Staff comments: A. Sunny gives brief background of request and findings.
Applicant comments: Larry Rowe, contractor, is agreeable to conditions of approval. Clarifies recessing the garage door.
Motion: D. Engel to approve subject to staff conditions. J. Zoellner 2nd
Vote: Ayes all, unanimous.

b. HRPB Project Number 15-00100230: Consideration of Pre-Construction Approval for a Historic Preservation Ad Valorem Tax Exemption for the property located at 514 South J Street, PCN# 38-43-44-21-15-171-0100. The subject building was constructed c.1924 and the property is a contributing resource within the Southeast Lucerne Local Historic District.
Staff Comments: A. Sunny reminds the Board site changes were previously approved and this is only for the tax abatement.
Applicant comment: None
Public comment: None
Motion to approve by D. Engel J. Just 2nd.
Vote: Ayes all, unanimous.

F. Unfinished Business

1. HRPB Project Number 15-00100211: Consideration of a Certificate of Appropriateness (COA) for roof replacement to the subject property located at 731 N M St, PCN# 38-43-44-21-15-220-0090. The subject building was constructed in 1946 and the property is a contributing resource within the Northeast Lucerne Local Historic District.

Staff Comment: To date the applicant has not provided any additional information or insight into the choice of the roofing material. Staff recommends denial because standing seam does not meet standards.
Board Comment: J. Zoellner, H. Robinson, D. Engel, J. Just all voice preference for the standing seam vs the shingled roof.
Applicant comment: John Downing believes the structure is not contributing, when the survey was done, no one contacted him. He cites 4 other masonry vernacular homes with metal roofs in his immediate area.
J. Zoellner states the standing seam looks nice as opposed to the asphalt single roof and aids in its architectural character.
D. Engel and J. Just believe if this home were surveyed today, it would not be a contributing structure due to so many changes in the past.
Public comment: Marion Cone- State would recommend not white and not tin. Board and applicant do not get to choose which previous iteration the applicant is able to do. Be careful of setting a precedent.

William Waters: anecdotal information as to the roofing styles of the past in South Florida and historical accurateness. We should be careful to not distort masonry vernacular.
T. Norris is against approval due to the vertical lines of the roof.
Motion: J. Just motions to approve the request J, Zoellner 2nd.
Nays: T. Norris
Ayes: D. Engel, J. Just, H. Robinson, J. Zoellner
Motion passes 4/1.

G. New Business

1. HRPB Project Number 15-00100231: Consideration of a Certificate of Appropriateness (COA) for roof replacement to the subject property located at 520 North Palmway, PCN# 38-43-44-21-15-164-0050. The subject building was constructed in 1939 and the property is a contributing resource within the Old Lucerne Local Historic District.
Staff recommends denial of standing seam for frame vernacular. A. Sunny reads from State Historical guidelines which offers a solution of metal shingles to be certified for South Florida Building Code by an engineer with the cost to be borne by applicant.
Board: There is a consensus that metal shingles do look good. Etching and recoated.
Applicant Comment: Dana McLaughlin: (roofer) indicated that it is too damaged to repair. Rust and structural damage indicated. Not wood, but aluminum siding. Significant cost to get metal tile vs. standing seam roof.
D. Engel: Believes an expert repair would deal with the rust thus allowing the repair. Points out Hypoluxo City Hall.
H. Robinson: indicates there are options for repair and at quite a savings.
D. Engel: conflicting vertical vs. horizontal lines would be the result.
Recommend recoat and repair or replace metal shingles. Applicant is trying to be proactive prior to leaking and believes it is an eyesore.
J. Zoellner states that this house is a prime example of a beautiful Lake Worth historical property.
Roofer: Greg Brodbeck Roofing – how to repair rusting shingle that has lived its life. Says Board is proposing to spend applicant money. There are only "5" homes left with this type of roof. That Board is trying to hang on to something that is already in remission.
Dana asks if an asphalt shingle would have been approved. A. Sunny indicates no, only metal shingle. Indicates home inspection would never pass in this state. Applicant states metal shingles are cost prohibitive but is willing to repair the existing if that is the solution. She has budgeted for a new roof but not double the cost.
A. Sunny would recommend a product but not a particular roofer.
Applicant is willing to come back in one month.
William horizontal applied metal roof. Possibly a compromise will be presented at next meeting.
Motion: J. Zoellner motions to continue until March meeting. 2nd T. Norris
Vote: Ayes all, unanimous.

2. HRPB Project Number 16-00100002: Consideration of a Certificate of Appropriateness (COA) for roof replacement to the subject property located at 612 North Palmway, PCN# 38-43-44-21-15-166-0030. The subject building was constructed in 1939 and the property is a contributing resource within the Old Lucerne Local Historic District.

Staff recommends denial, also a frame vernacular home.
Applicant comments: Michael Torres currently experiencing leaks.
Board comment: asks about roof quotes. Staff indicates this is not a hardship request. J. Zoellner indicates both of the last two requests are roofs that have lasted for 75 years which is remarkable. That the expense may be worth it if it lasts for that period of time.
American Roofing: Frankie provides a lesson in roofing. He wants a solution as the roof will not last for a month. Clips are different and will give problems.
Staff provides estimates in the 7-9K range, not double the amount of a standing seam roof. Barrage could be up to 20-30 % more than standing seam.
J. Zoellner indicates the applicant does have the opportunity for financial hardship. A. Sunny states some of the requirements for the application. It is understood that applicant is in need of roof. Metal shingle can be approved at staff level. Financial hardship criteria evaluation would come back before the Board. Roofer indicates he would like to remove and prepare and dry roof the applicant pending a decision to type of roof. Asphalt shingle. Board uncomfortable with having a roof torn off and not providing a resolution.
Opt to come back with a hardship application.
C. Ansay clarifies that a request for a standing seam cannot return to Board for one year.
Public comment: Jeanine Tompkins asks about asphalt dimensional shingle for hardship would be the only other state recommendation.
Motion: J. Zoellner to deny standing seam. 2nd by T. Norris
Vote: Ayes all, unanimous.

3. HRPB Project Number 15-00100240: Consideration of a Certificate of Appropriateness (COA) for roof replacement to the subject property located at 726 North M Street, PCN# 38-43-44-21-15-222-0060. The subject building was constructed in 1941 and the property is a contributing resource within the Northeast Lucerne Local Historic District.
   Staff recommends denial. Should be metal interlocking shingle. Original asbestos shingle. Currently tarped.
   D. Engel believes asphalt shingles would be acceptable.
   A. Sunny provides the scale texture and coloration most closely would be a metal shingle. Roofing currently has a horizontal look. Frame vernacular style.
   Applicant not present, roofer Rafael is. Unknown whether roof was originally white.
   Asbestos abatement may occur depending on what is there. 3 different materials on roof, ridge cap is concrete tile.
   Motion: J. Zoellner to approve with a white coloration shingle 2nd D. Engel.
   Vote: Ayes all, unanimous.

4. HRPB Project Number 15-00100234: Consideration of a Certificate of Appropriateness (COA) for window replacement for the single-family residence located at 921 South Palmway; PCN# 38-43-44-27-01-031-0131. The subject property was constructed in 1965 and is a non-contributing resource within the South Palm Park Local Historic District.

Staff recommends denial due to roller style divided light window. Awning style windows should be preserved. Roller presents vertical strength vs horizontal of the awning windows. Silver casement windows are recommended.
Board:
Applicant: Alphonse Campanelli, StormTek windows. Security and economic reasons as well as hurricane protection. Agreed to place muntions for horizontal feel. Windows are already manufactured. Anodized are not an option with this manufacturer.
Aimee says it is an excellent example of Ranch style. When a new survey comes up this house will become contributing (Built in 1965). Casement windows are the better representation, otherwise the look is window screen window screen. Alphonse indicates PGT roller does not have the larger lower bar.
J. Zoellner questions why the windows were manufactured prior to approval.
T. Norris would like to see the PGT windows prior to deciding. D. Engel indicates they are not to consider the fact that they are already manufactured.
Motion: J. Zoellner recommends denial, T. Norris 2nd.
Public comment: none
Vote: Ayes all, unanimous

5. Conceptual Review for 314 Columbia Drive: Discussion of an addition to the rear and side of the existing structure.
   Applicant has requested feedback prior to moving forward with design. Board and staff indicates willingness to work with client.

6. PZB/HRPB Project Number 16-02900001 Chapter 23, Land Development Regulations & Permitted Use Table of the Lake Worth Code of Ordinances
   M. Ducoste: repeat PZB. Consistency with noticing, site plan review, permitted uses by right or conditional. Mixed-Use Dixie highway promotes multi-family retail and commercial leading to impression that single family would be allowed (which is now eliminated) terminology change to lumens vs foot candle. Standard language brought up to 21st century terms (i.e. typewriter) off-street parking, signs (discrepancy permanent vs temporary set up re-alignment) landscape buffering for commercial property.
   There were two changes to this document after the Planning & Zoning Board meeting. 1. The word "building" amended to structure. 2. Home occupation with regard to single family or multi-family differentiation. Motion is to recommend to City Commission. Drive through financial institutions Conditional Use only Currently there are no drive through restaurants in downtown.
   T. Norris glad that Home occupation has been updated to include townhomes and condominium. Various specific lines are discussed.
   C. Ansay indicates PBC can place restrictions based upon size restrictions.
   T. Norris mentions LED lighting on Dixie Hwy. M. Ducoste indicates the intent is to "not draw attention" specifically to the structure, it should be complementary lighting.
   Motion: D. Engel recommends approval 2nd J. Just.
   Ayes all: unanimous

6. Planning Issues: None

7. Public Comments (3 minute limit): None

8. Departmental Reports:

A. Sunny relays information regarding two upcoming events Board and public may be interested in attending. Shows two (2) instances of roller window and garage doors.
Economic hardship criteria needs to be reviewed. Need to analyze and access the numbers.
It becomes completely subjective. The guidelines do not indicate the line is at any particular point, it varies by individual responsibility, standard of living etc..

9. Board Member Comments
Discusses the packet supply.
J. Zoellner: Hummingbird update? None
T. Norris: Questions why Burger King signage has been lowered, this a major or minor site plan modification.
M. Ducoste perhaps it was non-conforming. Comments regarding the green glow from Publix.
H. Robinson: Asks about a new appointee to replace L. Sharpe; economic hardship and economic impact on the city, historic district impact on local economies. Demo on South L will occur. Demo permit awaiting approval. Expresses concern over comments from public. The perception may be that the decisions are subjective however C. Ansay indicated what happens here is objective. Case by case does not mean subjective. Each case is reviewed, discussed and decided on its own merits.
J. Just: Was not aware of the meeting for the 17th.
D. Engel: College Park historic designation. Can this be updated by next meeting. 10th & Dixie is this a gas station (restart)?

10. Adjournment:
Motion: H. Robinson, J. Just 2nd at 9:50 pm
Vote: Ayes all: unanimous

Attest: _____
Herman Robinson, Chairman

Submitted By: _____
Sherie Coale, Board Secretary

Minutes Approved: _____
Date

CITY OF LAKE WORTH
1900 2nd Ave N · Lake Worth, Florida 33461 · Phone: 561-586-1687

Agenda
Special Meeting
City of Lake Worth
Historic Resources Preservation Board
City Hall Commission Room
7 North Dixie Hwy; Lake Worth, FL

WEDNESDAY, FEBRUARY 17, 2016 6:00 PM

1. Roll Call and Recording of Absences
   The meeting was called to order at: 6:00 pm
   Present were: Chairman Herman Robinson, Vice-Chair Darrin Engel, Judith Just, Tom Norris, Jimmy Zoellner.
   Erin Fitzhugh Sita arrived at 6:01PM
   Also present were: Maxime Ducoste, Planning Zoning Historic Preservation Manager, Curt Thompson, Community Planner; Aimee Sunny, Preservation Planning Coordinator; William Waters, Director of Community Sustainability; Carolyn Ansay Board Attorney; Board Secretary Sherie Coale.

2. **Pledge of Allegiance**

3. Additions/Deletions/Reordering and Approval of the Agenda
   None
   Motion to approve: T. Norris; J. Zoellner 2nd Ayes all/ unanimous.

4. Approval of Minutes
   None

5. Cases

   A. Swearing in of Staff and Applicants
      Board Secretary swore in Staff & Applicants

   B. Proof of Publication
      Motion to accept & approve proof:
      Ayes: all, unanimous.

   C. Withdrawals/Postponements
      None

   D. Consent
      None

E. Public Hearings

1. Board Disclosure – Ex Parte communications
   E. Fitzhugh Sita- had no communication or contact.
   D. Engel recused himself due to employment with REG Architects. His attendance was duly noted.
   J. Just – received a message and did not respond.
   H. Robinson spoke with John Zirty, Jim Tebbe, Wes Blackman, Charles Celi, Ed Grimm
   T. Norris-had a call from an Architect and did not respond to him.
   J Zoellner- had a call from John Zirty and did not respond to him.

F. Unfinished Business
   None

G. New Business

1. HRPB Project# 15-01400009 Major Site Plan to renovate and redevelop the Historic Gulfstream Hotel and related properties, including an application for the Sustainable Bonus Incentive Program. The subject site is +/- 79,304 square feet located at 1 Lake Avenue, 11 Lake Avenue, and 12, 14, 20, 22, and 24 South Lakeside Drive.

2. HRPB Project# 15-00500013 Conditional Use Permit to allow for the renovation and redevelopment and expansion of the historic Gulfstream Hotel and accessory uses within the Downtown (DT) Zoning District.

3. HRPB Project# 16-01500001 Setback Variance for the location of an electric utility transformer.

4. HRPB Project# 15-00100217 Certificate of Appropriateness (COA) for Exterior Alterations to the existing historic Gulfstream Hotel.

5. HRPB Project# 15-00100216 Certificate of Appropriateness (COA) for an Addition to the existing historic Gulfstream Hotel, including a Historic Waiver.

6. HRPB Project# 15-00100215 Certificate of Appropriateness (COA), for New Construction of a new hotel structure and parking garage, including a Historic Waiver.

7. HRPB Project# 15-00100214 - Certificate of Appropriateness (COA) to allow the demolition of two buildings located at 14 S Lakeside Drive.

Staff: William Waters, Community Sustainability Director began the presentation and acknowledged the opportunity for public speaking at the end of the meeting. The record will include all staff reports, powerpoint presentations, and back up documents submitted by the applicant on four (4) different occasions as well as justification statements. By providing a summarization of the projects, William indicates this is the highest value, most complicated and largest project Lake Worth has ever had to come before a board. The Board will function as a Planning and Zoning Board for three (3) cases and the balance of the cases (4) as the HRPB Board, he will assist with the different

code portions required for the different review criteria. Director details the parking, setbacks for the Downtown district.

Applicant: Ms. Bonnie Miskel requests to give a full presentation rather than case by case.

Director discusses the historic significance and how it can achieve sustainability, points out two other Palm Beach County hotels (Breakers and Boca Raton Resort & Hotel) and how they have successfully sustained the historical aspects of the hotels in light of preservation as well as economics.

Tim Bravis, JRA architect, historic planner (for the applicant), discusses harmonious tendencies. Discusses massing, features.

Board: E. Fitzhugh Sits expresses interest in hearing about not meeting setbacks.

J. Just asks about meeting space.

Applicant discusses floor space of the annex and original building. Primary valet is through historic hotel and transfer to annex, but there also exists a secondary valet at the annex. Second floor original beginning of the rooms. The pool surround (2nd Level) reaches over the alley.

Board asks about the lack of shade trees.

Don Scarman Landscape Architect - They are able to save (relocate) 2 oak 12-15 caliper 3 anchor points. 2nd floor green is not illustrated on these plans, but indicates there is substantial green on the 2nd floor.

Tim Bravis indicates the self-parking is first floor only, balance of parking garage will be valet, indicates the parking requirements have exceeded code requirements.

Staff indicates FDOT will dictate the valet parking on Fed. Hwy.

Board: concurs that parking on 1st Avenue is an issue (routing all traffic south). H. Robinson inquires about greenspace between parking and annex and inaccessibility. J. Just asks about parking for employees. Discusses ensures regarding the use of a fence for security (CPTED) (crime prevention through environmental design). T. Norris asks about moving the transformer, he is not comfortable with the building to the extent the code allows placing amenities on rooftops.

Ms. Miskel - The shifting of the annex forward on the lot would remove the benefit (highlight) as moving east along Lake Ave. By shifting the "H" shape south the vistas are better from each building. Bonnie continues with variance criteria review. The second waiver request is for an addition and wraparound to tie it in to the old structure so that addition appears planned.

Board: T. Norris concurs it looks good. H. Robinson would like the dumpster under cover to be watertight since dumpster is a rollout and will be moved over sidewalk to the truck.

Ms. Miskel indicates the two (2) buildings occupying the site have been vacant for quite sometime. Staff mentioned relocation of one structure, the other structure does not have sufficient structural integrity to be moved.

Presentation redirected back to the variance.

Conditions of Approval – Tim Bravis discusses original structure and National Park Service guidelines. Preserve, restore, replace is the last resort .

Board: E. Fitzhugh Sita asks for hardship summary. Ms. Miskel said it could have been broken into 2 but it would still necessitate a variance request. And really had no other place to put it with the addition. Variance request is for nine (9) feet. Added extensive lushly landscaped buffer/ screening. Erin asks about the length of the variance, not the entire length. Ms. Miskel can be very restrictive and ask for only the minimum required 5 foot variance be provided exclusively for the transformer. In conformance with the plan. Essential service, mechanical equipment. Staff guided as this is for an essential service.

Public Comment:

Jim Tebbe (15 S Golfview Rd #701) In favor of project being built. Parking is an issue.

Mary Ann Polizzi (1529 S Palmway) Loved the old Gulfstream, spoke of Finnish population. Events with no hotel. In favor and believes those against the project are against Lake Worth.

Lynn Anderson (2204 Lake Osborne Dr) In favor of the hotel. Would like height restricted to 45 feet. Go back to charter height.

Charles Celi (501 S Golfview #501) Would like transformer moved as he would see it every day. Would like a redesign of parking garage.

James Walker (818 N Golfview Rd) Would like project to move forward, other previous developers have not followed through.

Michael Fox (1609 North D St) Hotel needs revitalization questions how long can "we" hang on to "our little town" Fix the hotel and move forward.

Mary Watson (1817 Montague St) voted for the charter and would like the height restrictions held.

Gael Silverblatt (414 North O Street) Would like to know percentage of shade to palm trees, security issues, believes the annex looks too plain.

Rick Gonzales REG Architects speaking on behalf of Hudson Holdings states many cities are in a renaissance mode and sustainability. Bring back economic vitality. References the recently opened Hilton in downtown West Palm Beach.

Tammy Panza (160 North L Street) Would like the parking at Bryant Park to be preserved. Very happy to see this move forward. Height is ok and says the applicant has not gone to the full extent of the possible height. Stop chasing off investors.

Teresa Miller (829 N Lakeside) quotes a PB Post editorial. End the race to the bottom.

Martin Welfeld (829 N Lakeside) approves of the project.

Rosanne Malakates (101 S Lakeside Dr) Scale and density. Did not speak to the original building. Work with what is there. Parking would not be an issue or other issues if the there was no addition or second hotel. Enters document into the record, given to Chair.

Wes Blackman (241 Columbia Dr) Gives some history of hotel, that it is an obsolete property, does not meet current marketplace demands/desires, in favor of project.

Neily Buff (819 N Lakeside Drive) It is only data that matters, people speak from the heart but this is a business. A heart decision vs a business decision. That the extra floor is needed is a viable business decision

Greg Rice (511 Lucerne Ave) echoes the sentiment of being happy Hudson Holdings are in FL Speaks to the height of 3 bldgs in Lake Worth over 50 feet, no need to worry about becoming Miami. City populace needs to get in the lifeboat. This is a Historic precedent about to be set.

Laurel Robinson (114 Oceanbreeze) egress dumpster and crime prevention needs a good review. Support the hotel and setback. Keep the palms.

Linda Mahoney (131 N Golfview) violates City charter. Traffic and height are issues. Lighting will diminish quality of life and noise violations will occur. Retail will make it less friendly pedestrian wise. Against this plan as presented.

Joann Golden (502 N Palmway) Flooding, trains, traffic, climate change, lack of pedestrian safety. Developers bring plans fast and furious.. Stick to charter.

Richard Dersey (720 S Palmway) glad the applicant filed suit against City. Can fill shops and rooms.

H. Robinson read letter into record.

Anthony Marotta (327 N Lakeside) In favor of project, can only get married at the newly renovated Gulfstream.

William Waters read email into record (728 N Lakeside) Fredericke Mittner- 18 years as a Lake Worth resident and Historic Planner in favor.

Public Comment Complete:

Recess called by the chairman at 8:51 pm

Reconvened at 9:00 pm

William Waters: code requires bedchambers below the 4th floor must have windows and there are existing rooms on the floor plan as such. Keep this in mind as it may have some effect on the appearance. M.Miskel states it will be refined. William Waters indicates it may arise as an issue.

J. Just mentions staff parking and traffic. Ms. Miskel responds currently there is no "flag" so they have designed it to attract a flag which no flag would come without sufficient parking. The applicant is not designing for failure.

Parking ratio William states LW parking code, since it is historic it is vested. Requested a traffic management plan for the location, as a traffic statement not required. Ms. Miskel indicates no issue with the traffic management plan, clarifies the flag is Curio by Hilton

Steve Michael: franchisee reservation and HiltonHonors system only, Signage will be Gulfstream.

E. Fitzhugh Sita: one of the downsides of the developmental progress is traffic increases and that should be expected. Not just here but anywhere. We need to tell them now if Board wants another floor.

T. Norris questions whether the Traffic Management Plan should be provided prior to approving the extra floor.

Ms. Bonnie Miskel, speaking as an attorney, indicates applicant has met code, the law is the law, could pro-offer then renegotiate at a later date. We cannot require them to provide above code.

Staff would review TMP and administratively approve.

H. Robinson would like to discuss trailer parking.

E. Fitzhugh Sita asks about more room for 1st avenue.

William Waters indicates the balance of the street is the real issue.

T. Norris wants to put the planning on hold tonight and listen to Historic presentation. Would like to hear from A. Sunny, Historic Planning Coordinator.

Rick Gonzalez speaks about tax credits and deal breakers. Belle Glade city hall almost lost their tax credits due to something as simple as mullions. Disputes the need for handicap access at center.

H. Robinson dislikes the retail location, Ms. Miskel concurs and would gladly remove. William Waters addresses retail activity. Discussion by Board and applicant to remove retail from garage.

Retail moved to the annex 1st floor and confined to a corner. Both parties agree to 17 foot setback instead of 22. William Waters asks for symmetrical expansion of newly relocated retail space. However the balance of the building is almost 50 feet from the street. Bonnie indicates moving the mass of the building forward it is in conflict with their attempt to showcase the side of the historic Gulfstream Hotel.

Motion: E. Fitzhugh Sita #15 01400009 with staff conditions as proposed plus 1K sq feet retail in annex #5 landscape 2 relocated shade trees; staff reveiew landscape plan between parking garage and annex CPTED landscaping. Require annex building to go to 17 ft setback, remove retail wrap

from garage. T. Norris 2nd. Ms. Miskel asks for clarification about conditions. Was the sustainable bonus overlooked and 111k performance bond.

Motion amended E. Fitzhugh Site to include, T. Norris 2nd concurs. And amends again motion
Vote: All Ayes. /unanimous.

Conditional Use: HRPB 15-00500013 amend condition #2 which refers to PZB rather than HRPB

E. Fitzhugh Sita asks about Traffic Management Plan.

J Zoellner asks about traffic as it is a huge concern.

T Norris: all buildings on grade, not ½ below grade.

Public comment: Linda Mahoney 10 pm end of events in Bryant Park.

Wes Blackman - no baseline for decibels due to hotel not open at all.

Joann Golden- rooftop appurtenances.

Greg Rice- General Manager will not allow noise, they are self-regulating.

Bonnie indicates the code protects the citizens.

Public hearing closed. 11:03 PM.

Motion: E. Fitzhugh Sita motions to approve with traffic management plan and traffic study not earlier than 6 months after, upon Certificate of Occupancy for the annex. Condition requested by Chair regarding full dumpster door, waterproof and plan on utilization. Valet on upper levels.

J. Zoellner 2nd motion.

Vote: Ayes all unanimous.

Caroyln Ansay, Board attorney reiterates that staff and applicant previous presentations stand for the record.

Motion: #16-1500001 setback E. Fitzhugh Sita amended to proposed setback be only for essential electrical service equipment, electric service utility, including screening. J. Just 2nd

Vote: Ayes all, unanimous.

#15-00100217 exterior alterations William Waters clarifies conditions and not enough detail, if Board would like to transfer that authority to staff however keep in mind far simpler projects have been required to be reviewed by Board.

Other items cannot be heard without approval of HRPB#15-00100217.

Board Attorney advises that we should have a conversation with applicant regarding a continuance. Ms. Miskel allows that March 9 would be a workable date. No further noticing required since it is a continuance.

Public comment: none

Motion: T. Norris to date certain 217 (March 9 6:00 PM) E. Fitzhugh Sita 2nd

Vote: Ayes all, unanimous.

Motion: E. Fitzhugh Sita 216 J. Just 2nd

Vote: Ayes all, unanimous.

#15-00100215 discussion William Waters indicates it is desirable to go with Art Deco look as opposed to Spanish Revival. T. Norris remarks about the idea of transitioning to Art Moderne. No brown color.

Motion: E. Fitzhugh Sita to continue HRPB #15-00100215 J. Just 2nd

Vote: Ayes all, unanimous.

Public comment: none

Motion: J. Just to continue HRPB # 15-00100214 to March 9 T. Norris 2nd

Vote: Ayes all, unanimous.

Public comment: none

6. Planning Issues
   None
7. Public Comments (3 minute limit)
   None
8. Departmental Reports
   None
9. Board Member Comments
   None
10. Adjournment
    Motion to adjourn: H. Robinson, 2nd by E Fitzhugh Sita.
    Vote: Ayes all, unanimous
    Meeting adjourned: 11:35 PM

Attest:

_____
Herman Robinson, Chairman

Submitted By:

_____
Sherie Coale, Board Secretary

Minutes Approved:

_____
Date

Proof Amended

THE
LAKE WORTH HERALD

Published Once a Week

Lake Worth, Palm Beach County, Florida

STATE OF FLORIDA
COUNTY OF PALM BEACH:

BEFORE the undersigned authority personally appeared MARK J EASTON, who on oath says that he is PRESIDENT of *The Lake Worth Herald*, a weekly newspaper published at Lake Worth in Palm Beach County, Florida; that the attached copy of advertisement being a Legal Notice in the matter of

Notice of public meeting and hearing of the Lake Worth Florida Planning & Zoning Board to consider PZB/HRPB 16-02900002 will be held at 6:00 p.m. on April 6, 2016, in the City Hall Commission Chambers, 7 North Dixie Highway, Lake Worth, FL.

was published in said newspaper in the issue of

March 24, 2016

Affiant further says that the said The Lake Worth Herald is a newspaper published at Lake Worth, in said Palm Beach County, Florida, and that the said newspaper has heretofore been continuously published in said Palm Beach County, Florida, each week and has been entered as second class mail matter at the post office in Lake Worth, in said Palm Beach County, Florida, for a period of one year next preceding the first publication of the attached copy of advertisement; and affiant further says that he has neither paid nor promised any person, firm or corporation any discount, rebate, commission or refund for the purpose of securing this advertisement for publication in the said newspaper.

MARK J EASTON

SWORN TO AND SUBSCRIBED before me this 24th day of March, 2016, by Mark J Easton, who is known to me.

Notary Public, State of Florida at Large

DEBRA J SNODGRASS
NOTARY PUBLIC
STATE OF FLORIDA
Comm# FF045522
Expires 9/18/2017

Legal Notice No. 30050

PLEASE TAKE NOTICE that the City of Lake Worth, Florida, Planning & Zoning Board will hold a public hearing in the City Commission Room, in said City at or after 6:00PM on April 6, 2016, to consider a request as follows:

- **PZB/HRPB 16-02900002: Consideration of a request by Stateside Partners LLC for a text amendment to Chapter 23, Land Development Regulations and Permitted Use Table, of the Lake Worth Code of Ordinances to allow drive through facilities as conditional use within the Downtown(DT) zoning district. The Public Hearing will be conducted at the above stated time or as soon thereafter as possible.**

Written responses can be sent to the Lake Worth Planning & Zoning Board at 1900 2nd Avenue N, Lake Worth, FL 33461 and must arrive before the hearing date to be included in the formal record. You also have the opportunity to attend the meeting to provide oral testimony.

PLEASE TAKE NOTICE that the City of Lake Worth, Florida, Historic Resources Preservation Board will hold a public hearing in the City Commission Room, in said City at or after 6:00PM on April 13, 2016, to consider the following:

- **PZB/HRPB 16-02900002: Consideration of a request by Stateside Partners LLC for a text amendment to Chapter 23, Land Development Regulations and Permitted Use Table, of the Lake Worth Code of Ordinances to allow drive through facilities as conditional use within the Downtown(DT) zoning district. The Public Hearing will be conducted at the above stated time or as soon thereafter as possible**

Written responses can be sent to the Lake Worth Planning & Zoning Board at 1900 2nd Avenue N, Lake Worth, FL 33461 and must arrive before the hearing date to be included in the formal record. You also have the opportunity to attend the meeting to provide oral testimony.

For additional information on the above issues, please visit the City of Lake Worth Division of Planning, Zoning and Historic Preservation located at 1900 Second Ave. North, Lake Worth, Florida 33461 or contact City Staff at 561-586-1687.

If a person decides to appeal any decision made by the Board, Agency, or Commission with respect to any matter considered at such meeting or hearing, he or she will need a record of the proceedings, and that, for such purpose, he or she may need to ensure that a verbatim record of the proceedings is made, which record includes the testimony and evidence upon which the appeal is to be based. (FS 286.0105)

In accordance with the provisions of the American with Disabilities Act (ADA) this document may be requested in an alternative format. Persons in need of special accommodation to participate in this proceeding are entitled to the provision of certain assistance. Please call 561-586-1633 no later than five (5) days before the hearing if this assistance is required.

Publish: The Lake Worth Herald
March 24, 2016

FORM 8B MEMORANDUM OF VOTING CONFLICT FOR COUNTY, MUNICIPAL, AND OTHER LOCAL PUBLIC OFFICERS

LAST NAME—FIRST NAME—MIDDLE NAME	NAME OF BOARD, COUNCIL, COMMISSION, AUTHORITY, OR COMMITTEE
Engel, Darrin John	Historic Resources Preservation Board, City of Lake Worth
MAILING ADDRESS 235 Fordham Drive	THE BOARD, COUNCIL, COMMISSION, AUTHORITY OR COMMITTEE ON WHICH I SERVE IS A UNIT OF: ☑ CITY ☐ COUNTY ☐ OTHER LOCAL AGENCY
CITY: Lake Worth — COUNTY: Palm Beach	NAME OF POLITICAL SUBDIVISION:
DATE ON WHICH VOTE OCCURRED March 9th, 2016	MY POSITION IS: ☐ ELECTIVE ☑ APPOINTIVE

WHO MUST FILE FORM 8B

This form is for use by any person serving at the county, city, or other local level of government on an appointed or elected board, council, commission, authority, or committee. It applies to members of advisory and non-advisory bodies who are presented with a voting conflict of interest under Section 112.3143, Florida Statutes.

Your responsibilities under the law when faced with voting on a measure in which you have a conflict of interest will vary greatly depending on whether you hold an elective or appointive position. For this reason, please pay close attention to the instructions on this form before completing and filing the form.

INSTRUCTIONS FOR COMPLIANCE WITH SECTION 112.3143, FLORIDA STATUTES

A person holding elective or appointive county, municipal, or other local public office MUST ABSTAIN from voting on a measure which would inure to his or her special private gain or loss. Each elected or appointed local officer also MUST ABSTAIN from knowingly voting on a measure which would inure to the special gain or loss of a principal (other than a government agency) by whom he or she is retained (including the parent, subsidiary, or sibling organization of a principal by which he or she is retained); to the special private gain or loss of a relative; or to the special private gain or loss of a business associate. Commissioners of community redevelopment agencies (CRAs) under Sec. 163.356 or 163.357, F.S., and officers of independent special tax districts elected on a one-acre, one-vote basis are not prohibited from voting in that capacity.

For purposes of this law, a "relative" includes only the officer's father, mother, son, daughter, husband, wife, brother, sister, father-in-law, mother-in-law, son-in-law, and daughter-in-law. A "business associate" means any person or entity engaged in or carrying on a business enterprise with the officer as a partner, joint venturer, coowner of property, or corporate shareholder (where the shares of the corporation are not listed on any national or regional stock exchange).

* * * * * * * * * * * * * * * * *

ELECTED OFFICERS:

In addition to abstaining from voting in the situations described above, you must disclose the conflict:

PRIOR TO THE VOTE BEING TAKEN by publicly stating to the assembly the nature of your interest in the measure on which you are abstaining from voting; *and*

WITHIN 15 DAYS AFTER THE VOTE OCCURS by completing and filing this form with the person responsible for recording the minutes of the meeting, who should incorporate the form in the minutes.

* * * * * * * * * * * * * * * * *

APPOINTED OFFICERS:

Although you must abstain from voting in the situations described above, you are not prohibited by Section 112.3143 from otherwise participating in these matters. However, you must disclose the nature of the conflict before making any attempt to influence the decision, whether orally or in writing and whether made by you or at your direction.

IF YOU INTEND TO MAKE ANY ATTEMPT TO INFLUENCE THE DECISION PRIOR TO THE MEETING AT WHICH THE VOTE WILL BE TAKEN:

- You must complete and file this form (before making any attempt to influence the decision) with the person responsible for recording the minutes of the meeting, who will incorporate the form in the minutes. (Continued on page 2)

APPOINTED OFFICERS (continued)

- A copy of the form must be provided immediately to the other members of the agency.
- The form must be read publicly at the next meeting after the form is filed.

IF YOU MAKE NO ATTEMPT TO INFLUENCE THE DECISION EXCEPT BY DISCUSSION AT THE MEETING:

- You must disclose orally the nature of your conflict in the measure before participating.
- You must complete the form and file it within 15 days after the vote occurs with the person responsible for recording the minutes of the meeting, who must incorporate the form in the minutes. A copy of the form must be provided immediately to the other members of the agency, and the form must be read publicly at the next meeting after the form is filed.

DISCLOSURE OF LOCAL OFFICER'S INTEREST

I, Darrin Engel, hereby disclose that on March 9th, 20 16 :

(a) A measure came or will come before my agency which (check one or more)

___ inured to my special private gain or loss;

___ inured to the special gain or loss of my business associate, _____ ;

___ inured to the special gain or loss of my relative, _____ ;

___ inured to the special gain or loss of REG Architects, Inc., by whom I am retained; or

___ inured to the special gain or loss of _____, which is the parent subsidiary, or sibling organization or subsidiary of a principal which has retained me.

(b) The measure before my agency and the nature of my conflicting interest in the measure is as follows:

I am employed by REG Architects, Inc. which is pursuing a contract to assist in architectural consulting on the Gulfstream Hotel Development with Hudson Holdings, the Owner of the Gulfstream Hotel. A contract has not been secured yet, March 9th, but may be in the near future.

If disclosure of specific information would violate confidentiality or privilege pursuant to law or rules governing attorneys, a public officer, who is also an attorney, may comply with the disclosure requirements of this section by disclosing the nature of the interest in such a way as to provide the public with notice of the conflict.

March 9th, 2016
Date Filed

Signature

NOTICE: UNDER PROVISIONS OF FLORIDA STATUTES §112.317, A FAILURE TO MAKE ANY REQUIRED DISCLOSURE CONSTITUTES GROUNDS FOR AND MAY BE PUNISHED BY ONE OR MORE OF THE FOLLOWING: IMPEACHMENT, REMOVAL OR SUSPENSION FROM OFFICE OR EMPLOYMENT, DEMOTION, REDUCTION IN SALARY, REPRIMAND, OR A CIVIL PENALTY NOT TO EXCEED $10,000.

Lake Worth, Florida. The Art of Florida Living.sm

City Of Lake Worth
Department for Community Sustainability
Planning, Zoning and Historic Preservation Division
1900 Second Avenue North · Lake Worth · Florida 33461· Phone: 561-586-1687

MEMORANDUM DATE: April 6, 2016

AGENDA DATE: April 13, 2016

TO: Chair and Members of the Historic Resources Preservation Board

RE: **520 North Palmway**

FROM: Aimee N. Sunny, Senior Preservation Coordinator
Department for Community Sustainability

TITLE: **HRPB Project Number 15-00100231**: Consideration of a Certificate of Appropriateness (COA) for roof replacement to the subject property located at **520 North Palmway**, PCN# 38-43-44-21-15-164-0050. The subject building was constructed in 1939 and the property is a contributing resource within the Old Lucerne Local Historic District.

OWNER: Dana McLaughlin
520 North Palmway
Lake Worth, FL 33460

BACKGROUND:

This case was heard at the February 10, 2016, HRPB meeting and the Board voted to continue the case to the March 9, 2016, regular meeting. At the March 9, 2016, regular meeting, the Applicant requested and the Board voted to continue the hearing to the April 13, 2016, regular meeting. The Board requested additional information to be provided by the Applicant addressing the feasibility of coating or repairing the roof, or proposing a different roof material that would be compatible with the existing interlocking metal shingle roof. To date, the Applicant has provided two quotes to coat the roof and one evaluation of the existing roof.

Staff has conducted a cursory search of metal shingle roof materials, and has found three products that could closely replicate the existing metal shingles and are approved to be installed in this area. These products include a Berridge "Victorian" silver metal shingle, a Classic Metal Roofing Systems "Oxford Shingle" in Shake Gray, and a Tamko "Stonecrest Tile Shingle" in Sierra Slate Gray or a custom silver color. Basic information about these products has been included as Attachment 8.

The property at 520 North Palmway has a one-story single-family structure built in 1939 in a Frame Vernacular style. The property has frontage on North Palmway to the west. The original architectural plans for the main house are available in the City's property files, and were designed by Paist and Steward Architects from Miami, Florida. Based on the original plans, the building has undergone few alterations over time. The building retains many character defining features, including lap siding, metal shingles, and

a brick chimney. The original wood windows were changed in 1994, however the new windows retain the 1/1 configuration and conform to the original openings. Overall, the building retains a high level of historic integrity of location, setting, materials, craftsmanship, and design.

REQUEST:

The Applicant is proposing to replace the existing original interlocking galvanized metal shingles with a Southeastern Metals SEM-Lok Snap Standing Seam 16" wide aluminum roof panel system.

COMPREHENSIVE PLAN CONSISTENCY:

It is the opinion of Staff that the project, as proposed, is not consistent with the Comprehensive Plan goals and objectives concerning historic preservation and housing due to the fact that the Applicant is proposing a change that will have an adverse effect on the historic integrity of the property.

Goal 1.4 Encourage preservation and rehabilitation of historic and natural resources and where appropriate restrict development that would damage or destroy these resources. (Objective 1.4.2)

Objective 3.2.5: To encourage the identification of historically significant housing, and to promote its preservation and rehabilitation as referenced by the Surveys of Historic Properties conducted for the City of Lake Worth.

Policy 3.2.5.1: Properties of special value for historic, architectural, cultural or aesthetic reasons will be restored and preserved through the enforcement of the City's Historic Preservation Ordinance to the extent feasible.

CONSEQUENT ACTION:

Approve the application; approve the application with conditions; continue the hearing to a date certain to request additional information; or deny the application.

ANALYSIS:

Staff has reviewed the documentation and materials provided in this application and applied the applicable guidelines and standards found in the City's Historic Preservation Ordinance, detailed in Attachment 1 – Decision Criteria.

The National Park Service and Secretary of the Interior's Standards have very specific criteria regarding replacement of historic materials. Specifically Standards 2, 5, and 6 apply in this situation:

Standard 2 - The historic character of a property will be retained and preserved. The removal of distinctive materials or alteration of features, spaces, and spatial relationships that characterize a property will be avoided.

Standard 5 - Distinctive materials, features, finishes, and construction techniques or examples of craftsmanship that characterize a property will be preserved.

Standard 6 - Deteriorated historic features will be repaired rather than replaced. Where the severity of deterioration requires replacement of a distinctive feature, the new feature will match the old in design,

color, texture, and, where possible, materials. Replacement of missing features will be substantiated by documentary and physical evidence.

According to the Secretary of the Interior's Standards, disctinctive materials that characterize a property shall be preserved. The roof material is an important character defining feature of a historic property. According to the architect's specification book provided in the City's property file, and included as Attachment 4, the original roof material installed in 1939 was "interlocking galvanized metal shingles, with a 15 lb. felt underlayment. The original metal shingles are still in place, and have rusted over time. A previous owner painted the shingles with an elastomeric silver paint, which is now peeling off of the shingles.

It is the opinion of Staff that the proposed change to an aluminum standing seam roof is not appropriate for the structure, and negatively effects a character defining feature of the property. The metal shingles have a horizontal rhythm and scale that is substantially different from the crisp vertical lines and shadows of the standing seam roof. Additionally, the Frame Vernacular style of architecture in the late 1930's primarily used metal shingles, and did not use standing seam metal. The metal shingles represent a distinctive material and level of craftsmanship that is very indicative of the local Frame Vernacular style.

The National Park Service Preservation Brief #4 "Roofing for Historic Buildings" has been included as Attachment #7. This Brief discusses the issues and options for the repair and replacement of historic roofs. Under the "Alternative Materials" section of the Brief, Staff would like to draw special attention to this paragraph:

"In a rehabilitation project, there may be valid reasons for replacing the roof with a material other than the original. The historic roofing may no longer be available, or the cost of obtaining specially fabricated materials may be prohibitive. But the decision to use an alternative material should be weighed carefully against the primary concern to keep the historic character of the building. If the roof is flat and is not visible from any elevation of the building, and if there are advantages to substituting a modern built-up composition roof for what might have been a flat metal roof, then it may make better economic and construction sense to use a modern roofing method. But if the roof is readily visible, the alternative material should match as closely as possible the scale, texture, and coloration of the historic roofing material."

Additionally, Staff has contacted the Florida Division of Historical Resources with regards to the request for roof replacement with standing seam metal. The response from the State's Senior Architect, Kenneth Cureton, is included as Attachment 3. In particular, Staff would like to draw attention to the follow excerpt,

"We would strongly advise against sheet metal products, since the strong vertical lines and shadows of such products would adversely impact the historic status of the building, as it would completely change the character of the roof and have no historical basis."

With regards to alternate roof options, the letter from Mr. Cureton states,

"In all four cases you have presented, the first consideration would be replacement of the historic materials based on pictorial evidence, which you have provided. The NPS Guidelines allows that when an in-kind replacement of a historic roof "…is not technically or economically feasible, then a compatible substitute

material may be considered." The key here is compatibility. If in-kind replacement is not feasible, our opinion of a compatible roof for these particular projects is the actual roof material would be subordinate to the color and pattern that the historic roof provided. The low slope of the roof pitch in all four examples would allow for replacement with an architectural grade shingle, provided it was in the light grey color range the metal shingles originally presented. We feel that a white shingle would not be an appropriate color."

Replacement metal shingles are still available, and are therefore technically feasible. Additionally, this is the primary sloped roof for the structure and is readily visible. The metal shingles are the only product that will properly replicate the "scale, texture, and coloration of the historic roofing material" as required by National Park Service's Standards for the Rehabilitation of Historic Properties. If it is determined that the metal shingles are not financially feasible, the recommendation from the Florida Division of Historical Resources is that a light gray architectural dimensional shingle should be used. Staff will defer to the Board regarding the economic feasibility of the products.

RECOMMENDATION:

Staff recommends that the Board deny the application as submitted, given that the metal roof installation as proposed by the Applicant does not meet the Secretary of the Interior's Standards for Rehabilitation, does not meet the criteria set forth in the City of Lake Worth Land Development Regulations §23.5-4(k), and will have an adverse effect on the integrity and character of the property.

If the Board chooses to approve a replacement roof for the structure, Staff recommends the following conditions:

1) The replacement roof material shall be silver metal shingles, to replicate the existing metal shingles as closely as possible.

POTENTIAL MOTION:

I MOVE TO APPROVE/DENY HRPB 15-00100231: Consideration of a Certificate of Appropriateness (COA) for roof replacement for the subject building located at 520 North Palmway as recommended by Staff.

ATTACHMENTS:

1. Administrative Decision Criteria
2. Application Photographs
3. Memo from Kenneth Cureton
4. Original Architectural Drawings
5. Justification Statement
6. Roof Quotes and Specifications
7. NPS Preservation Brief #4 "Roofing for Historic Buildings"
8. Metal Shingle Options

LOCATION MAP

MEMORANDUM

DATE: April 6, 2016

TO: Chair and Members of the Historic Resources Preservation Board

FROM: Aimee N. Sunny, Preservation Planning Coordinator
Department of Community Sustainability

SUBJECT: **HRPB Project Number 15-00100231**: Consideration of a Certificate of Appropriateness (COA) for roof replacement to the subject property located at **520 North Palmway**, PCN# 38-43-44-21-15-164-0050. The subject building was constructed in 1939 and the property is a contributing resource within the Old Lucerne Local Historic District.

HRPB Meeting Date: April 13, 2016

Per Section 23.5-4k(1) of the historic preservation ordinance, the Board shall use the following criteria in making a determination:

A. What is the effect of the proposed work on the landmark or the property upon which such work is to be done?
Response: It is the opinion of Staff that the proposed work on the property located at 520 North Palmway will have an adverse visual effect on the building.

B. What is the relationship between such work and other structures on the landmark site or other property in the historic district?
Response: The proposed work will have no direct physical effect on any surrounding properties within the surrounding Old Lucerne Local Historic District. However, the project would have an adverse visual effect on the building itself and an indirect adverse effect on the district.

C. To what extent will the historic, architectural, or archaeological significance, architectural style, design, arrangement, texture, materials and color of the landmark or the property be affected?
Response: The project as proposed would have an adverse effect on the integrity of material and design of the building. The proposed roof replacement is not compatible with the architectural style and design of the structure.

D. Would denial of a certificate of appropriateness deprive the property owner of reasonable beneficial use of his property?
Response: The denial of this COA as submitted does not prevent the Applicant from proposing other alterations to the home, or re-roofing with an alternate recommended material.

E. Are the applicant's plans technically feasible and capable of being carried out within a reasonable time?
Response: Yes.

F. Do the plans satisfy the applicable portions of the general criteria contained in the United States Secretary of the Interior's Standards for Rehabilitation then in effect or as they may be revised from time to time? The current version of the Secretary's Guidelines provides as follows:

(1) A property shall be used for its historic purpose or be placed in a new use that requires minimal change to the defining characteristics of the building and its site and environment.
Response: No change to the use of the property is proposed.

(2) This historic character of the property shall be retained and preserved. The removal of historic materials or alteration of features and spaces that characterize a property shall be avoided.
Response: It is the opinion of Staff that the proposed metal roof material would alter the Frame Vernacular character of the structure by altering the strong horizontal lines of the existing metal shingle roof.

(3) Each property shall be recognized as a physical record of its time, place and use. Changes that create a false sense of historical development, such as adding conjectural features or architectural elements from other buildings, shall not be undertaken.
Response: Not applicable to this project.

(4) Most properties change over time; those changes that have acquired historic significance in their own right shall be retained and preserved.
Response: Not applicable to this project.

(5) Distinctive features, finishes and construction techniques or examples of craftsmanship that characterize a historic property shall be preserved.
Response: The roof is a distinctive feature of the structure, and the type of roof material used on the structure should be retained. The metal shingle is an example of the craftsmanship of the 1930's and was widely used in Frame Vernacular design. This is an important design feature, and should be preserved or replaced in kind.

(6) Deteriorated architectural features shall be repaired rather than replaced, wherever possible. In the event replacement is necessary, the new material should match the material being replaced in composition, design, color, texture, and other visual qualities.

Repair or replacement of missing architectural features should be based on accurate duplications of features, substantiated by historical, physical, or pictorial evidence rather than on conjectural designs or because the different architectural elements from other buildings or structures happen to be available for relocation.
Response: Not applicable to this project.

(7) Chemical or physical treatments, such as sandblasting, that cause damage to historic materials, shall not be used. The surface cleaning of structures, if appropriate, shall be undertaken using the gentlest means possible.
Response: Not applicable to this project.

(8) Significant archeological resources affected by a project shall be protected and preserved. If such resources must be disturbed, mitigation measures shall be undertaken.
Response: Not applicable to this project.

(9) New additions, exterior alterations or related new construction shall not destroy historic materials that characterize the property. The new construction shall be differentiated from the old and shall be compatible with the massing, size, scale and architectural features to protect the historic integrity of the property and its environment.
Response: The application is not proposing a new addition.

(10) New additions and adjacent or related new construction shall be undertaken in such manner that, if removed in the future, the essential form and integrity of the historic building and its environment would be unimpaired.
Response: Not applicable to this project.

G. What are the effects of the requested change on those elements or features of the structure which served as the basis for its designation and will the requested changes cause the least possible adverse effect on those elements or features?
Response: It is the opinion of Staff that the historic character of the property would be adversely affected by the proposed project as submitted by the Applicant, as outlined above. The proposal does not represent the least possible adverse effect.

Section 23.5-4k(2). Additional guidelines for alterations.

In approving or denying applications for certificates of appropriateness for alterations, the HRPB shall also consider the following additional guidelines:

A. Is every reasonable effort being made to provide a compatible use for a property that requires minimal alteration of the building, structure or site and its environment, or to use the property for its originally intended purpose?
Response: No change to the use of the property is proposed.

B. Are the distinguishing original qualities or character of a building, structure or site and its environment being destroyed? The removal or alteration of any historic material or distinctive architectural features shall be avoided whenever possible.
Response: It is the opinion of Staff that the historic character of the property would be adversely affected by the proposed project as submitted by the Applicant, as the original style of the building would be affected by the alterations proposed.

C. When a certificate of appropriateness is requested to replace windows or doors, the HRPB shall permit the property owner's original design when the HRPB's alternative design would result in an increase in cost of thirty (30) percent above the owner's original cost. The owner shall be required to demonstrate to the HRPB that:
(1) The work to be performed will conform to the original door and window openings of the structure; and
Response: Not applicable to this project.

(2) That the replacement windows or doors with less expensive materials will achieve a savings in excess of thirty (30) percent over historically compatible materials otherwise required by this code.
Response: Not applicable to this project.

520

Aimee Sunny

From: Cureton, Kenneth H. <Kenneth.Cureton@dos.myflorida.com>
Sent: Friday, February 05, 2016 4:17 PM
To: Aimee Sunny
Subject: RE: Lake Worth - Roof Questions

Aimee

To follow up on our conversation this morning, the State Historic Preservation Office follows the National Park Service / Secretary of the Interior's Standards for Rehabilitation and Guidelines for the Rehabilitation of Historic Buildings explicitly when reviewing projects under our purview, along with the supplemental guidance NPS provides. Such additional NPS guidance can be found in their preservation topics index here: http://www.nps.gov/tps/how-to-preserve/by-topic.htm

These standards are incorporated by reference in Section 1203 and Appendix B of the Florida Building Code – Existing Building, 5th Edition as code mandated requirements for work on buildings that meet the definition of a **Historic Building** in Section 1202 therein. Therefore, the argument can be made that if the Standards are not followed, the work is not in compliance with the building code.

In all four cases you have presented, the first consideration would be replacement of the historic materials based on pictorial evidence, which you have provided. The NPS Guidelines allows that when an in-kind replacement of a historic roof "…is not technically or economically feasible, then a *compatible* substitute material may be considered." The key here is compatibility. If in-kind replacement is not feasible, our opinion of a *compatible* roof for these particular projects is the actual roof material would be subordinate to the color and pattern that the historic roof provided. The low slope of the roof pitch in all four examples would allow for replacement with an architectural grade shingle, provided it was in the light grey color range the metal shingles originally presented. We feel that a white shingle would not be an appropriate color.

We would strongly advise against sheet metal products, since the strong vertical lines and shadows of such products would adversely impact the historic status of the building, as it would completely change the character of the roof and have no historical basis.

We would also strongly advise that if a lack of selection of metal shingles with Florida Product Approval is the reason for higher costs, your authority having jurisdiction should contact the Florida Building Commission to investigate local product approval options.

Hope this opinion helps clarify how we would view such issues on a State level.

Thanks for your inquiry and best of luck with your projects.

Kenneth H. Cureton, R.A., NCARB
Senior Architect, Bureau of Historic Preservation | Division of Historical Resources | Florida Department of State | 500 South Bronough Street | Tallahassee, Florida 32399 | 850.245.6343 | 1.800.847.7278 | Fax: 850.245.6439 | Kenneth.Cureton@DOS.MyFlorida.com | dos.myflorida.com/historical

FLORIDA DEPARTMENT OF STATE
DIVISION OF
Historical Resources

From: Aimee Sunny [mailto:asunny@LakeWorth.org]
Sent: Friday, February 05, 2016 12:03 PM
To: Cureton, Kenneth H.
Cc: Hilburn, Richard L.
Subject: Lake Worth - Roof Questions

Mr. Cureton,

Thank you very much for your time and consideration this morning regarding the projects I mentioned in Lake Worth. I very much appreciate your analysis and discussion on the various roof types we discussed, as they relate to historic properties.

As I mentioned, I have attached a few photos of several cases that will be heard before the HRPB next Wednesday, February 10th, and I welcome your input:

520 N Palmway – Contributing, c.1940, Frame Vernacular, with original flat metal shingles. The request is for Southeastern Metals, SEM-Lok Snap Standing Seam 16" wide Aluminum panels.

612 N Palmway – Contributing, c.1940, Frame Vernacular, with original flat metal shingles. The request is for Gulf Coast Supply, Gulf-Lok 16" Wide Roof Panels, 26 gauge steel.

726 N M St – Non-contributing, c. 1940, Frame Vernacular, with original flat metal shingle that have been coated several times. The request is for CertainTeed Landmark dimensional asphalt shingles.

731 N M St – Surveyed as Contributing, but has lost many features over time. 1946, Masonry Vernacular. The original construction drawings called for rolled slate roofing, the roof was changed to flat white concrete tile in 1955, and later changed to 3-tab asphalt shingles in the 1990's. The request is now to change to Gulf Coast Supply, Gulf-Lok 16" Wide Aluminum Roof Panels, in a white color.

I look forward to receiving your suggestions, and to working with you in the future.

Best wishes,

Aimee N. Sunny
Preservation Planning Coordinator
City of Lake Worth
1900 Second Avenue North

Lake Worth, Florida 33461
561-586-1690
asunny@lakeworth.org

The Department of State is committed to excellence.
Please take our Customer Satisfaction Survey.

13"x13" T.C. FLUE
CLAY BRICK
METAL SHINGLES
CEIL. LINE
24x24
WOOD SIDING
24x24
FLOOR LINE
FIN. GRADE
SCREENED VENTS
4"x4"
8'-4"
1'-9"
1'-8"

"RIGHT" SIDE "ELEVATION"
SCALE 1/4"=1'-0"

13"x13" T.C. FLUE
CLAY BRICK
FLASHING
12
ROOF PITCH
5
1"x8" T.&G.
METAL SHINGLES
SCRD LOUVRE VENT
CEIL. LINE
WOOD SHUTTERS
24x24
24x24
24x24
24x24
6'-9"
W.I. BARS
WOOD SIDING
FLOOR LINE
CLAY BRICK
CEM. STEP & PLAT.
SCRD VENT
FIN. GRADE
8'-4"
1'-9"

"FRONT" ELEVATION"
SCALE 1/4"=1'-0"

13"x13" T.C. FLUE
CRICKET
CLAY BRICK
FLASHING
SCRD LOUVRE VENT INSIDE GARAGE
CEILING LINE
WOOD SIDING
CASEMENT WINDOW
4"x4"
24x24
24x24
8'-4"
9'-6"
FLOOR LINE
FIN. GRADE
GARAGE FL.
1'-9"

"LEFT" SIDE "ELEVATION"
SCALE 1/4"=1'-0"

13"x13" T.C. FLUE
CLAY BRICK

PLASTER
GRILLES
CLAY BRICK
HEATILATOR UNIT M. 24-H

MANTEL DETAIL
SCALE 1/4"=1'-0"

FLUSH DOOR
LINOL.
4" TOP SPACE

KITCHEN DETAIL
SCALE 1/4"=1'-0"

METAL SHINGLES
1"x8" T.&G.
SCRD LOUVRE VENT
CEIL. LINE
24x24
24x16
30x24
30x24
CASEMENT WINDOW
WOOD SIDING
FLOOR LINE
4"x4"
8'-4"
6'-9"
3'-6"
1'-9"
FIN. GRADE
SCRD VENTS
4" CL. TILE VENTS

"REAR" ELEVATION"
SCALE 1/4"=1'-0"

SHEATHING
SIDING
FLASHING
HEAD
CAULK
7/8 FRAME
JAMB
USE PULLMAN SASH BALANCE
CAULK
1 1/2"
1 3/4" SILL
CAULK
SILL

SECTION THRU D.H. WINDOW
SCALE 1 1/2"=1'-0"

4"x4"
4"x4"
PORCH
40'-0" CEM. FLOOR
12'-0"
8'-0" 1/2" PITCH
2"x6" RAFTERS @ 16" O.C. EXPOSED
6'-7"
10'-8"
6'-10"
CEM. STEP
6'-1"
7'-2"
17'-4"
7'-11"
5'-5"
B.T.
CAB. 8'-8½"
2'-6"x6'-8" CORNER
4"
8'-2½"
6"
5'-0½"
4"
10'-2"
4"
6'-2"
6'-5"
LINOLEUM
BELL & BUZZER
DINING ROOM
10'-2"
D.A.
BATH
LINOL. FL. WD. BASE
2'-8"x6'-8"
MED.
KITCHEN
LINOL. FL. WD. BASE
CABINET
DRAINER
LAUNDRY TRAYS
2'-0"
RANGE
2'-6"x6'-8"
2"x6" RAFTERS @ 16" O.C.
2"x6" CEIL. JOISTS 16" O.C.
BED ROOM #2
12'-6"
CEM. STEP
4'-11"
2'-6"
CHINA CLOS.
2'-0"x6'-8"
LINEN
2'-6"x6'-8"
HALL
2'-6"x6'-8"
2'-6"x6'-8"
2'-6"x6'-8"
4"
3'-2"
2"
3'-10"
CLOSET
CEDAR CLOSET
2'-6"x6'-8"
2'-6"x6'-8"
BRICK
BRICK FACIA
LIVING ROOM
HEATILATOR UNIT MODEL 24-H
METAL GRILLE
15'-2"
13'-2"
11'-2"
4"
GARAGE
10'-4"
CEM. FLOOR
2'-6" RAFTERS @ 16" O.C. EXPOSED
2'-6" RAFTERS @ 16" O.C.
2"x6" CEIL. JOISTS 16" O.C.
3'-9"
3'-8"
3'-2"
3"x7"x13/4"
B.T.
5'-6"
10'-2"
FLOWER BIN BRICK
P.B.
CEM. STEP & PLATFORM
BED ROOM #1
2"x6" RAFTERS 16" O.C.
2"x6" CEIL. JOISTS 16" O.C.
14'-10"
27'-2"
5'-11"
1'-4"
8'-6"
1'-2"
4'-6"
8'-1"
2'-7"
6'-11"
6'-11"
40'-0"

FLOOR PLAN
SCALE 1/4"=1'-0"

4" CL. TILE VENTS
4" CONC. SLAB 3/8"x4" @ 0.C. 1/4"x12" O.C.
40'-0"
T'-6"
10'-8"
6'-7"
4'-1"
6"
11'-0"
6"
12'-0"
17'-4"
4'-0"
7'-11"
5'-5"
CEM. STEP OVER
OPEN
VENT
VENT
6"
32'-5"
6"
6'-5"
3'-0"
5'-2"
2"x8" FLOOR JOISTS 16" O.C.
10'-8"
10'-0"
VENT
CEM. STEP OVER
6"
10'-2"
6"
15'-11"
6"
11'-11"
6"
14'-10"
27'-2"
4'-8"
3'-8"
2"x8" FLOOR JOISTS 16" O.C.
2"x8" FLOOR JOISTS 16" O.C.
OPEN
OPEN
VENT
4" CONC. SLAB ON FILL 6"x6" #10 REAR MESH
20'-0"
21'-0"
3'-7"
6"
10'-2"
6"
8'-8"
FOOTING
BRICK
6"
4'-6"
6"
2"x8" 12" O.C.
12'-10"
FLOOR JOISTS
VENT
6"
1'-4"
8'-6"
1'-2"
10'-0"
5'-0"
6'-11"
6'-11"
CEM. STEP OVER
40'-0"

FOUNDATION PLAN
SCALE 1/4"=1'-0"

METAL SHINGLES NOT SHOWN
2"x6" RAFTERS 16" O.C.
15# FELT
7/8" SHEATHING
5/12 PITCH
2"x6" JOISTS 16" O.C.
PLUMBERS STRAP EVERY SECOND RAFTER
METAL DRIP
1/4" SCRD PIPE VENT 4'-0" O.C.
PLASTER
SHEATHING
SIDING
BLDG. PAPER
2"x6" STUDS 16" O.C.
8'-4"
2"x4" DIAG. BRACING AT ALL CORNERS
FIN. FL.
SUB. FL.
GALV. STRAP EVERY 3RD STUD TO SILL
2"x8" 16" O.C.
2"x6" PLATE
TERMITE SHIELD
3/4" ø x 16" BOLT
FIN. GRADE
1'-8" MIN.
NATURAL GRADE LINE
2-1/2" ø CONT.
14"

TYPICAL WALL SECTION
SCALE 3/4"=1'-0"

DATE 11-1-38	RESIDENCE FOR L.G. LINMAN & SON LAKE WORTH, FLORIDA		COMM. NO. 1065
DRAWN BY J.C.	PHINEAS E. PAIST, A.I.A. HAROLD D. STEWARD ARCHITECTS INGRAHAM BLDG. MIAMI		DRAWING NO. 1
CHECKED	TITLE		
	ISSUED	REVISED	

Permit No. 0241

Plan No. ~~[illegible]~~

Zone A

Fire Limit outside

Bureau of Building Inspection

CITY OF LAKE WORTH

Application for Erection of Buildings

Application is hereby made to the Bureau of Building Inspection of the City of Lake Worth, for the approval of plans, in duplicate, herewith submitted including plot plan, for the erection of the building or buildings herein described. All provisions of the Building and Zoning Laws and Ordinances shall be complied with in the erection of said building or buildings, whether specified herein or not.

(Sign here) Roland Underwood

Lake Worth, Florida Dec 21, 1928.

DETAILED STATEMENT OF SPECIFICATIONS FOR THE ERECTION OF NEW BUILDINGS.

State buildings to be erected Store No. of stories one

Location of Bldg 1201 N A St Lot 5 Block 164 Addn

Occupancy No. of rooms 2

Size of Lot: No. of feet frontage 50 Feet rear 50 Depth 135

Size of Bldg: 27 x 40 Feet Frontage 30 Feet rear 30 Depth 30

Build. set back: front 20 Sides 5 - 16 Rear 23

No. of feet in height from surface of ground to highest point of roof

Height of 1st story 8 2d 3d 4th

Size of foundation: Footing 8 x 4 Wall 8

Material for foundation Concrete

Thickness of external walls: 1st story 8 2nd 3d 4th

Size of girder or beam 8 x 6 set on Concrete

Construction of chimneys Brick with liner

With what materials walls to be coped

Will roof be flat, pitched, or mansard? Pitched Material of roofing Tile

Size of joist or beams: 1st floor 2 x 8 2nd 3d 4th

Centers 16

Ceiling joist 2 x 6 Rafters 2 x 6 Centers 16 - 24

Size of studding 2 x 4 Centers 16

Will there be any projection beyond building line?

Have you complied with State Workmen's Compensation Requirements? Yes

Cost of building 3,250

Remarks

Owner L. A. Summers & Son Address

Contractor Roland Underwood Address

Work was commenced on the within building on the day of

, 19, and completed on the day of

, 19.

Respectfully,

Inspector.

I N D E X

General Conditions---------- 1.
Excavation-Concrete-Masonry---------- 2, 3.
Millwork & Carpentry---------- 4, 5.
Lathing & Plastering---------- 6.
Painting---------- 6.
Roofing & Sheet Metal---------- 7.
Electric Work---------- 8.
Plumbing---------- 9, 10.

R E S I D E N C E

F O R

L. G. L I N M A N A N D S O N

L A K E W O R T H, F L O R I D A

PAIST & STEWARD

Architects

1136 Ingraham Building
Miami, Florida

WMB/d/10/31/38

GENERAL CONDITIONS

General Conditions	The General Conditions of the American Institute of Architects apply to this building as though copied herein in full and copy of same may be had upon application to the Architect.
Right to Reject Bids	The Owner reserves the right to reject any or all bids as well as sub-contractors. A list of proposed sub-contractors shall be submitted with the bid.
Examination of Premises	The Contractor shall carefully examine the premises as no allowance will be made for lack of full knowledge of all conditions except underground which are indeterminable.
Laying out Work	The Contractor shall assume responsibility for damage sustained by Owner due to incorrect location of the building or laying out of the work.
Windstorm Insurance	The Owner shall effect and maintain windstorm insurance as well as fire insurance as called for in Article 29.
Defective or Improper Work	Any work or materials not acceptable to the Architect must be removed by the Contractor and replaced by approved materials or work without extra compensation.
Ordinances and Regulations	All requirements of the Federal Housing Administration as well as all requirements of local and state ordinances and regulations relating to buildings shall be observed by all contractors.
Permits	The General Contractor shall secure and pay for general building permits. Special permits shall be taken out and paid for by the Contractor of such work.
Guarantee	The Contractor shall be responsible and shall make good any defects due to faults in labor or materials, which may arise or be discovered within one year after completion of the work and its acceptance by the Architect.

EXCAVATION - CONCRETE - MASONRY

Removal of Earth

The excavations shall be cut to sufficient size and depth to allow for foundations, form work and the installation of all other work to the best advantage. Excavation for soil, water, underground conduit, etc. shall be done by the respective trades.

Grading of any surplus soil shall be done as indicated on the drawings as grading up to the walls of the building. Contractor is to furnish any additional soil required for terraces or slabs on fill after soil from excavations has been used up for that purpose.

Reinforcing Steel

Reinforcing steel for concrete shall be intermediate grade conforming to specifications of the American Society for Testing Materials.

Concrete

Reinforced concrete shall be in proportion of one part cement to six parts fine and coarse aggregates. In proportioning materials one bag of cement weighing approximately 94 pounds shall be considered as one cubic foot.

Usually fine and coarse aggregate is to be proportioned to a ratio of 2-1/2 parts fine to 3-1/2 parts coarse, but same may be varied by the Architect to secure a smooth working mixture. In no case will more than eight gallons of water to each bag of cement be used and same may be reduced where aggregate is wet. Designed strength for concrete shall be a minimum of 2500 lbs.

Brick

All brick for trim shall be old brick as approved by the Architect. Chimney shall be constructed of Common or Cement brick above throat. Flue to be 13 x 13 T.C. flue lining full length.

Heatilator

Provide and install a Heatilator in Fireplace opening, of size indicated, complete with intake and exhaust grills.

Topping

Finish topping for steps and slabs shall be not less than 3/4" thickness, troweled hard and smooth. Mix for topping shall be one part cement to two and one-half parts fresh water sand, except where an imitation stone is specified; same shall be composed of 1/2 white cement 1/2 gray and two parts white sane, floated as directed by Architect.

Forms	Wood forms for the concrete work shall be built strongly and rigidly to support load of concrete without deflections. Forms shall be built straight and true and to size required.
Paving	Garage floor and ribbons shall be cement finish on concrete slab as specified below.
Slab	Slab shall be four inches thick where called for, reinforced with 6-6-10-10 galvanized road mesh and waterproofed with Sec #1 per manufacturer's specification. Slab laid over tamped and soaked fill.

MILLWORK & CARPENTRY

General	General Contractor shall maintain a competent superintendent or foreman on the job from start to finish and such foreman shall be responsible for the determination of lines and levels, maintaining street barricades, lanterns, scaffolds, etc. necessary for the safety of the workmen and the public.
Rough Stock & Framing Lumber	Framing lumber shall be #2 or better short leaf pine, thoroughly seasoned, mill sawn to full dimensions and free from sap, shakes, large and unsound knots and all other defects imparing its strength.
Treating of Lumber	Exterior millwork all sides of exterior door and window frames and all wood in contact with masonry shall be treated with two brush coats of Cel-cur-sol.
Vents	Roof vents to be 1-1/2" galvanized pipe or sleeves 20' o.c. placed around entire eaves of house. Proper access doors shall be placed to attic. Louvre vents where shown shall be constructed of wood with a hopper back and shall have 18 mesh bronze screen. Provide storm shutters for louvre vents which may be easily installed.
Roof & Wall Sheathing	All sheathing shall be #2 Common Pine Stock sheathing laid at right angles to supports 12" o.c. with butt joints over same. Exterior wall sheathing shall be 1 x 6 12" o.c. laid at an angle of 45 degrees. Cover sheathing of walls with 30# rag felt securely cap nailed in place and extend same around door and window frames as directed.
Siding	Exterior siding shall be #1 Cypress 10" bevelled laid 8" to the weather. Siding shall be 1-3/8" stock resawed as directed. The interior walls of garage to have 8" "V" jointed cypress boards laid horizontal.
Windows	Windows shall be double hung 1-3/8" sash, white pine with Pullman sash balancers. Glass to be set in full bed of putty.
Millwork	Construct and fit neatly in place, securely, all cabinets, cases, shelves, rods, etc. indicated on the drawings. Bedroom closets shall have one shelf and a garment pole. Linen closet to be fitted with five shelves.

Kitchen dressers shall be to detail with flush panel Fir doors. Counter tops, back and ends shall be standard grade linoleum with chromium edging.

All exterior doors to be of ClearCypress. Interior doors to be stock 1-3/8" single panel doors. Trim to be plaster mould stock #1 Cypress.

Glazing — All glazing shall be with D.S.B. glass set with wood steps in putty in glass doors and with putty in wood sash.

Grounds — Carpenter shall set grounds where required.

Ceilings — Ceiling. Porch shall be Select #2 Cypress; boards shall be T & G "V" joints.

Floors — All floors except where indicated otherwise shall be select Red Oak sanded and given two coats varnish. Kitchen and bathroom floors to be standard grade linoleum set over felt and mastic.

Hardware — Contractor shall furnish and install rough hardware such as bolts, anchors, straps, etc.

Finish Hardware — An allowance of Fifty ($50.00) Dollars shall be made for finish hardware.

Weather-stripping — Exterior doors where shown shall have 2-1/2" bronze inter-locking threshold with spring bronze inter-locking feature.

Screens — All exterior doors shall have screens of 18 mesh bronze screen. Thickness shall be 1-1/8".

Medicine Cabinet — Allowance shall be made of Eight ($8.00) Dollars for medicine cabinet.

Cedar Closet — Closet where shown to be lined, walls and ceiling, with 3/8" T & G Red Cedar.

Shutters — Shutters where shown are #2 Cypress. All other windows shall be fitted with wood or prestwood shutters.
SHUTTERS SHALL BE BATTEN TYPE.

GARAGE — GARAGE INTERIOR TO BE FINISHED WITH FIR PLYWOOD.

LATHING AND PLASTERING

General

No lathing shall be done until building is acceptable to the plasterer and until electrician and plumber have had their rough installations inspected and approved by their inspectors.

No finish plaster to be applied until roof is complete.

Application of plaster is to be in two coat job, scratch, and finish, with finish in texture of trowel and brush, fairly smooth, and according to approved sample. Finish in bath and kitchen to be troweled smooth and hard. Plaster shall not show scaffold marks or other discoloration.

Lath shall be first quality Cypress, thoroughly seasoned and dry and lath shall be securely nailed, reinforced at angles and corners with six inch Clinton wire lath strips nailed on with galvanized nails.

PAINTING

General

Painter shall inspect the work of others before commencing his work and shall report any defective work which will give him unsatisfactory results and commencing work indicates acceptance of work of others.

Exterior Woodwork & Metal

All exterior woodwork and metal except copper to be painted with two coats of lead and oil Sherwin Williams or equal in addition to priming coat, which on metal shall be aluminum metal primer.

Interior Woodwork

Interior woodwork including base, trim, interior and exterior of cabinets, etc. to be painted two coats lead and oil in addition to priming coat of colors selected. Third coat in one bath and kitchen to be enamel. Putty fill cracks between woodwork and plaster.

Plaster

Plaster will not be painted.

ROOFING & SHEET METAL WORK

Metal Shingles	All roofs to be covered with interlocking galvanized metal shingles of approved make. All to be laid according to manufacturer's instructions. 15 LB. FELT UNDER THIS ROOF.
Flashing	All flashing including 14" valley flashing and drip strip shall be 16 oz. copper.

ELECTRIC WORK

General

The complete electrical installation shall conform with all the rules and regulations of the National Board of Fire Underwriters specified in the latest edition of the Code, the local rules of the Florida Power & Light Co. and the Southern Bell Telephone Co; and the requirements of the Inspector.

Architect will furnish information regarding the location of the service pole and note that meter and service installation shall conform with the recent requirements of the Power Company.

Materials

Duplex receptacles and switch outlets may be four inch or Gem D. Provide plaster rings and all ceiling and bracket outlets with no bolt fixture studs.

Covers and switch plates to be bakelite, cover plates, switches to be toggle type and gange switches where more than one occurs.

Service & Metering

Light and Power service shall be overhead from nearest pole. Master switch and distributing panel shall be flush mounted in neat manner.

Provide meter loop and conduit connection to panels and furnish one spare fuse gap and complete set of fuses. Power to consist of one two pole 60 amp gap for range, one 30 amp. gap for refrigerator and one 30 amp gap for heater.

Overhead service to be three wire 110/220 volt and wire shall be rubber covered cable.

Label clearly and neatly all circuits at panel. Ground all equipment properly in accordance with requirements.

Wiring SHALL BE ROMX. ~~on exterior walls shall be run in hot dip galvanized steel tubing~~. Under fill or outside shall be conduit.

Fixtures

Fixtures shall be furnished by Owner and installed by this contractor.

Buzzer

Provide push button from front and rear door with buzzer and bell in kitchen.

PLUMBING

General

The Plumbing installation shall be in accordance with the requirements of the Inspector and Code of the City and certificates of approval shall be obrained as required.

Sanitary system shall be connected with septic tank supplied by this Contractor according to Code.

All piping for sanitary system within the building walls to be cast iron. Cold water piping shall be run with C.I. This contractor shall run water service to meter. Meter and tap to be supplied by Owner.

Sanitary

The connections in cast iron shall be made up with picked oakum and lead. Vent piping to be graded to free itself of condensation and rain water and horizontal soil lines to be graded not less than 1/4" to foot.

Lead bends and wastes shall be covered with bronze screen spot soldered.

Vents through roof to be flashed with lead.

Fixtures

Bath (In White)
C-3308 5' Corwith Bath
C-3866-B C.P. Bath and shower fixture
C-33581-E C.P. Waste
C-4962-B 1 x 62" C.P. Rod.

Closet (In White)
C-11125-JA Neuton bowl with shelf
C-13580 Neumode Tank
C-9010 White Sheet covered seat
C-14484 Floor flange
C-14510 China bolt caps
C-32589 C.P. supply valve

Lavatory
C-2500 17 x 19" Neuday lavatory
C-32165 C.P. Supply and waste fixture
C-38A-235 C.P. supplies
C-33980 1-1/4" C.P. P Trap

Toilet Room
Closet:
C-1125-JA Neuton as above.

Kitchen (In White)
C-19350-X 20 x 24" A.R. sink
C-32751-AS C.P. faucet
C-33980 1-1/2" C.P. Trap
C-19770 C.P. Utility Waste

Laundry Trays

C-21294-B two part cement Laundry tray on frame
C-31746-S Rough N.P. Laundry faucet 1½" lead P. trap

The home currently has a metal shingle tile roof. The roof proposed by the homeowner is a standing seam metal roof.

THE STANDING SEAM METAL ROOF IS IN KEEPING WITH THE CHARACTER OF THE HOUSE AND THE NEIGHBORHOOD

* The standing seam metal roof is consistent with the historic nature of the house. The home is a 1941 frame vernacular which the Model Guidelines for Design Review (Florida Department of State) describes as having "metal roofs, including ornamental metal roofs". The standing seam consists of metal panels which run from the ridge of the roof to the eaves connected by raised fasteners (seams). According to the Design Guidelines for Old Town Historic District and Major Thoroughfares, "metal standing seam or shingle roofs are appropriate to the frame vernacular building style". There is no evidence that the specific roof proposed by the Preservation Planning Coordinator is a necessary component of a frame vernacular structure.
* The standing seam roof is in keeping with the character of the neighborhood. Comparable homes in the neighborhood have standing seam roofs as well as roofs which are inferior to the proposed standing seam roof (5v crimp, shingle, etc). (See photographs of comparable contributing homes provided.)

THE ROOF PROPOSED BY THE PRESERVATION PLANNING COORDINATOR WILL PLACE AN UNREASONABLE FINANCIAL BURDEN ON THE HOMEOWNER

* Roof replacement is not required at this time. Though the current roof is aging and in poor condition, it is still functional. However, the homeowner wishes to improve the present condition of the house by installing a new roof.
* The homeowner is not proposing the least expensive available roof. To the contrary, the homeowner is willing to pay a greater cost to elevate the value of the home and contribute to the character of the neighborhood by installing a standing seam metal roof.
* The roof proposed by the Preservation Planning Coordinator is considerably more expensive than the standing seam roof. The expense of the installation and materials of the Planning Coordinator's proposed roof creates an unreasonable financial burden on the homeowner.
* The homeowner has contracted with Brodbeck roofing company and Mr. Brodbeck based upon his over 30 years of experience and reputation in local roof installation.

The proposed roof is compatible with the architectural style of the home and will not adversely affect the historic integrity of the original structure.

NORTH PALMWAY

109 N Palmway (Contributing)

222 N Palmway Below (Contributing)

206 N Palmway (contributing)

214 N Palmway (contibuting)

230 N Palmway (contributing)

302 N Palmway (contributing)

411 N Palmway (contributing)

428 N Palmway(contributing)

NORTH PALMWAY

722 N Palmway(contributing)

826 N Palmway (on your January agenda and reportedly, previous to this metal roof, had a metal shingle roof) (contributing)

NORTH PALMWAY

524 N Palmway (my neighbor to the north) (contributing)

514 N Palmway (My neighbor to the south)

close up

NORTH PALMWAY

515 N Palmway (contributing)

Across the street from me: 527 N Palmway (contributing)

NORTH PALMWAY

525 And 527 N Palmway (across the street from my house and both contributing)

525 N Palmway and on the January agenda. Reportedly had a metal shingle roof prior to the current metal roof(contributing)

509 N Palmway (contributing)

NORTH PALMWAY

NORTH LAKESIDE

230 N Lakeside (contributing)

716 N Lakeside (contributing)

NORTH LAKESIDE

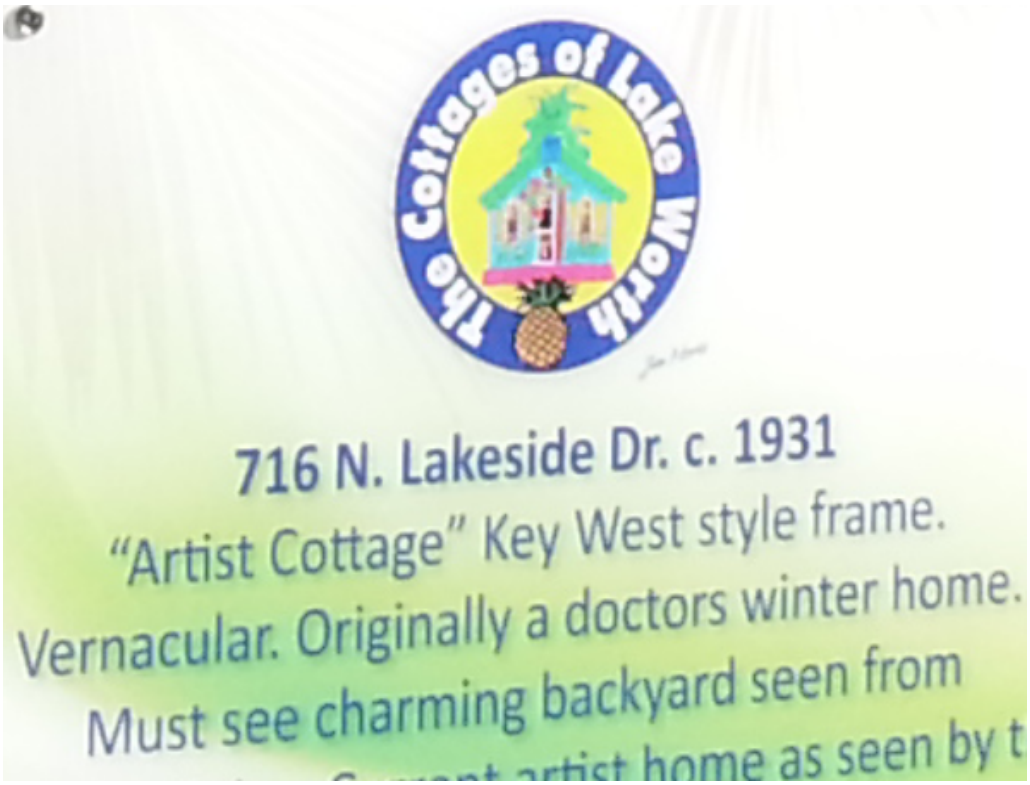

821 N Lakeside (contributing)

NORTH LAKESIDE

NORTH O STREET

418 N O Street (contributing)

510 N O Street (contributing)

NORTH O STREET

514 N O Street (contributing)

NORTH O STREET

521 N O Street (contributing)

NORTH O STREET CONTINUED

526 N O Street (contributing)

604 N O Street (contributing)

NORTH O STREET CONTINUED

611 N O Street (contributing)

621 N O Street (contributing)

NORTH O STREET CONTINUED

PRODUCT 118 Page No. of Pages

Proposal

W. E. BRODBECK ROOFING COMPANY, INC.
601 Industrial Street
LAKE WORTH, FL 33461
(561) 582-0449

PROPOSAL SUBMITTED TO: Dana Mclaughlin	PHONE: 628-2160	DATE: 12-8-15
STREET: 520 N Palmway	JOB NAME:	
CITY, STATE and ZIP CODE: Lake Worth,FL.33460	JOB LOCATION:	
ARCHITECT:	DATE OF PLANS:	JOB PHONE:

We hereby submit specifications and estimates for:

Labor and material to remove slope and flat roofs down to sheathing and renail to new codes.Reroof slope with a 30pd felt tin tagged on,install 26 gaugh galvalume Berridge dripedge,valley metal and base flashings where needed.Finish with mill finish 26 gauge Berridge Victorian style shingle.Install slip sheet in between panels and 30pd felt.Install collars around pipe penatrations. Reroof flatdeck with a 75pd base tin tagged,mop 2plys glass in hot asphalt.Install 3x3 galvalume dripedge around eaves and 16" in break.Prime all metal with asphalt primer.Finish with a white granulated modified in hot asphalt.Replace up to 100 linear ft of 1x sheathing.Permits included.

$ 14,960.00

Labor and material for woodwork over amount stated above will be $2.75 a linear ft.We will remove the debris.

We Propose hereby to furnish material and labor — complete in accordance with above specifications, for the sum of: _____ dollars ($ _____).

Payment to be made as follows:
50% at start Balance upon completion.

All material is guaranteed to be as specified. All work to be completed in a workmanlike manner according to standard practices. Any alteration or deviation from above specifications involving extra costs will be executed only upon written orders, and will become an extra charge over and above the estimate. All agreements contingent upon strikes, accidents or delays beyond our control. Owner to carry fire, tornado and other necessary insurance. Our workers are fully covered by Workman's Compensation Insurance.

Authorized Signature _____

Note: This proposal may be withdrawn by us if not accepted within _____ days.

Acceptance of Proposal — The above prices, specifications and conditions are satisfactory and are hereby accepted. You are authorized to do the work as specified. Payment will be made as outlined above.

Signature _____

ABC Supply Co. inc.

BRANCH:
400 RINKER WAY
LAKE WORTH FL
33461-3817

(561)585-4999

Superior Service - Quality Products - On-Time Delivery - Brands You Want

This Quotation is subject to the Terms and Conditions set forth on the reverse side. This Quotation is NOT VALID for purchases made beyond thirty (30) days of issuance unless signed by an officer or branch manager of ABC Supply, in addition to the signature of an ABC Supply salesman or other ABC Supply representative.

QUOTATION

CUSTOMER:
W E BRODBECK RFG CO INC
601 INDUSTRIAL ST
LAKE WORTH FL
33461-3892

SHIP TO:
BERRIDGE SHINGLE

SLS#	OT#	PAGE
	SLM	1

QUOTE NO.	CUSTOMER ORDER NO.	SHIP VIA	CUSTOMER NO.	TERMS	QUOTE DATE	EXP. DATE
1759728		CPU	26703100	1% 10TH NET EOM	2/04/16	3/05/16

ITEM NUMBER	ITEM DESCRIPTION	U/M T/D	QUANTITY	UNIT PRICE	EXTENDED PRICE
QUOTE	FROM: ABC #048 LAKE WORTH				
99MIABC	MISCELLANEOUS GOODS	EA	1	4130.00	4130.00
BERRIDGE SHINGLES 14 SQ					
99MIABC	MISCELLANEOUS GOODS	EA	1	1084.08	1084.08
BERRIDGE TRIM PACKAGE					
99MIABC	MISCELLANEOUS GOODS	EA	1	246.00	246.00
SCREWS & SEALANT					
78ANCOS042	FREIGHT/PACKAGING	EA	1	1350.00	1350.00

QUOTE ONLY NOT INVOICE

SUBTOTAL	6810.08
FREIGHT	.00
EST. SALES TAX	408.60
QUOTE TOTAL (U.S.)	7218.68

Salesman or other ABC Supply Representative

Title: _____

Branch Manager or ABC Supply Officer

Title: _____

Duration: _____

Proposal

W. E. BRODBECK ROOFING COMPANY, INC.
601 Industrial Street
LAKE WORTH, FL 33461
(561) 582-0449

PROPOSAL SUBMITTED TO	PHONE	DATE
Dana Mclaughlin	628-2160	11-15-15
STREET	JOB NAME	
520 N Palmway		
CITY, STATE and ZIP CODE	JOB LOCATION	
Lake Worth,FL.33460		
ARCHITECT / DATE OF PLANS		JOB PHONE

We hereby submit specifications and estimates for:

Labor and material to remove slope and flat roofs down to sheathing and renail to new codes.Reroof slope with a 30pd felt tin tagged on,install 26 gauge galvalume dripedge around eaves white metal in valleys and base flashing where needed.Finish with mill finish 5v crimp or snap lock standing seam panels.Install slip sheet in between panels and 30pd felt,install collars around pipe penatrations. Reroof flatdeck with a 75pd base tin tagged,mop 2 plys glass in hot asphalt.Install 3x3 galvalume dripedge around eaves and 16" in break.Prime all metal with asphalt primer.Finish with a white granulated modified in hot asphalt.Replace up to 100 linear ft of 1x sheeting.Permits included. 5v crimp $8,250.00

Standing Seam $8,875.00

Labor and material for woodwork over amount stated above will be $2.75 a linear ft.We will remove the debris.

We Propose hereby to furnish material and labor — complete in accordance with above specifications, for the sum of: _____ dollars ($ _____).

Payment to be made as follows:

All material is guaranteed to be as specified. All work to be completed in a workmanlike manner according to standard practices. Any alteration or deviation from above specifications involving extra costs will be executed only upon written orders, and will become an extra charge over and above the estimate. All agreements contingent upon strikes, accidents or delays beyond our control. Owner to carry fire, tornado and other necessary insurance. Our workers are fully covered by Workman's Compensation Insurance.

Authorized Signature _____

Note: This proposal may be withdrawn by us if not accepted within _____ days.

Acceptance of Proposal — The above prices, specifications and conditions are satisfactory and are hereby accepted. You are authorized to do the work as specified. Payment will be made as outlined above.

Signature _____

Date of Acceptance: _____ Signature _____

ABC Supply Co. inc.

BRANCH:
400 RINKER WAY
LAKE WORTH FL
33461-3817

(561)585-4999

Superior Service - Quality Products - On-Time Delivery - Brands You Want

This Quotation is subject to the Terms and Conditions set forth on the reverse side. This Quotation is NOT VALID for purchases made beyond thirty (30) days of issuance unless signed by an officer or branch manager of ABC Supply, in addition to the signature of an ABC Supply salesman or other ABC Supply representative.

QUOTATION

CUSTOMER:
W E BRODBECK RFG CO INC
601 INDUSTRIAL ST
LAKE WORTH FL
33461-3892

SHIP TO:

SLS#	OT#	PAGE
		1

QUOTE NO.	CUSTOMER ORDER NO.	SHIP VIA	CUSTOMER NO.	TERMS	QUOTE DATE	EXP. DATE
1760249	W.E. BRODBECK RFG	CPU	26703100	1% 10TH NET EOM	2/05/16	3/06/16

ITEM NUMBER	ITEM DESCRIPTION	U/M T/D	QUANTITY	UNIT PRICE	EXTENDED PRICE
	******CHANGE ORDER TYPE: QUOTE #01 FROM 048	QUOTE	EDIT 1/24/16		
78MSSO5236	MS IMAGE II PANELS LF 11" RIDGE 26GA 6PCS	EA	1	406.84	406.84
	RES EXT EAVE 26GA 8PCS EW PITCH BREAK 1PC				
	W VALLEY 3PCS RES IMAGE II RAKE 10PCS				
	S/W PITCH BREAK 90 DEG 2PCS				
78MSSO0436	MS ACCESSORIES PACKAGE	EA	1	499.48	499.48
	OFFSET CLEAT 26PCS IMAGE II Z CLOSURE 25PCS				
	COUNTER FLASH 2PCS 1/8"X3/16" POP RIVET S/S 2 BAGS				
	TITE BOND TUBE SEALANT CLEAR 8 TUBES DOUBLE BEAD TAPE SEALANT 25FT 20 ROLLS				
	#10-12X1" PANCAKE HEAD SCREW 3 BAGS HEMMING TOOL				
78MSSO5236	MS IMAGE II PANELS LF	EA	1	1034.66	1034.66

QUOTE ONLY
NOT A PROOF

SUBTOTAL	1940.98
FREIGHT	50.00
EST. SALES TAX	116.46
QUOTE TOTAL (U.S.)	2107.44

Salesman or other ABC Supply Representative

Title: _____

Branch Manager or ABC Supply Officer

Title: _____

Duration: _____

BUILDING DIVISION
DEPARTMENT FOR COMMUNITY SUSTAINABILITY
CITY OF LAKE WORTH
1900 2ND AVENUE NORTH
LAKE WORTH, FL 33461
561.586.1647

ROOF / REROOF CHECKLIST

Address: 520 N Palmway Date: 12-9-15

PR Number: _____

Use of Building:

☑ 1 or 2 Family Dwelling ☐ Multi-Family (3 or More Units) ☐ Non-Residential

Exposure Category: C Existing Roof Material: Metal

Roof Type: ☐ New Roof ☑ Re-Roofing ☐ Recovering ☐ Repair __ % Roof / Section

Roof Slope: 4 /12 Deck Type: Wood Roof Height: 10' Ft.

Proposed Roof Covering: (Check all that apply to this permit application)

☑ Flat Roof ☐ Mechanically Fastened Tile ☐ Mortar / Foam Set Tile
☐ Asphalt Shingles ☑ Metal Panel / Shingle ☐ Wood Shakes / Shingles
☐ Other: _____

Slope of Roofing Work by Area: (Complete all that apply)

Flat Roofs Up to (17%) ≤2" / 12" 24 sf

Slope Roofs (18%) ›2.5" / 12" 120 sf

Is Enhanced Nailing Required Per NOA: Yes ☐ No☐

CERTIFICATION:

Gregory Broadbeck — Qualifier Name (Print)
Signature
12-9-15 — Date

SemCoat SP - 40 Year Warranty

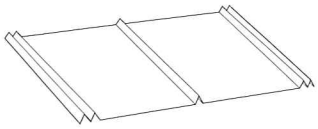

5V CRIMP

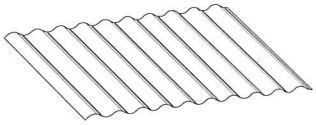

CORRUGATED

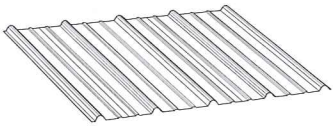

SM-RIB

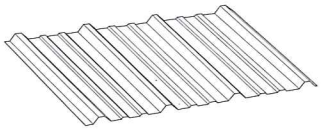

PBR & R

Our advanced Superl Paint System includes a 40 year warranty against chipping, cracking and peeling. Exhibits exceptional color retention and is formulated to meet or exceed Energy Star® requirements.

COLOR	5V CRIMP	CORRUGATED	SM-RIB	PBR & R
Barn Red	26	26	26/29	26/29
Bone White	26	26	29	29
Burnished Slate	26	26	26	26
Charcoal Gray	26	26	26/29	26/29
Cocoa Brown	26	26	29	29
Forest Green	26	26	26/29	26/29
Hawaiian Blue	26	26	26/29	26/29
Light Stone	26	26	26/29	26/29
Marine Green	26	26	–	–
Mocha Tan	26	26	26/29	26/29
Old Town Gray	26	26	26/29	26/29
Reflective White	26	26	26	26

SemCoat Plus - 45 Year Warranty

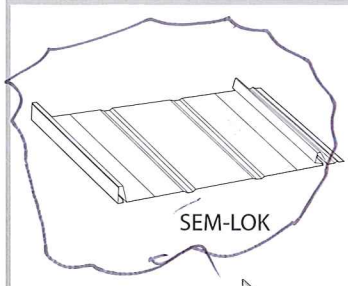

SEM-LOK

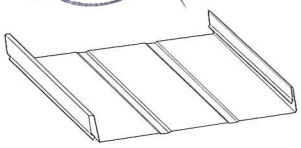

VERTI-LOK

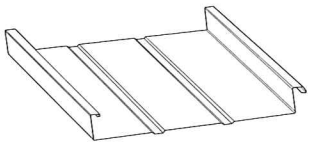

ROCK-LOK

Our premium Kynar Paint system includes a 45 year warranty against chipping, cracking, peeling and fading. Exhibits superior color retention and performs in a wide range of harsh environments.

COLOR	SEM-LOK	VERTI-LOK	ROCK-LOK	SM-RIB	PBR
Brick Red	24/26	24	24	24/26	24/26
Chamois Tan	26	24	24	26	26
Copper Penny	24/26	24	24	24/26	24/26
Hartford Green	24/26	24	24	24/26	24/26
Onyx Gray	24/26	24	24	24/26	24/26
Patina Green	26	24	24	26	26
Regal Blue	24/26	24	24	24/26	24/26
Regal White*	24/26	24	24	24/26	24/26
Silver Dollar	24/26	24	24	24/26	24/26
Slate Bronze	24/26	24	24	24/26	24/26
Slate Gray	24/26	24	24	24/26	24/26

** 24 Gauge 5V-Crimp and Corrugated panels also available in Regal White.*

Customer Service
800.874.0335
Technical Support
800.690.7235

SEMCO™
SOUTHEASTERN METALS
www.semetals.com
11801 INDUSTRY DRIVE • JACKSONVILLE, FLORIDA 32218

SemCoat Multi-Layer Process

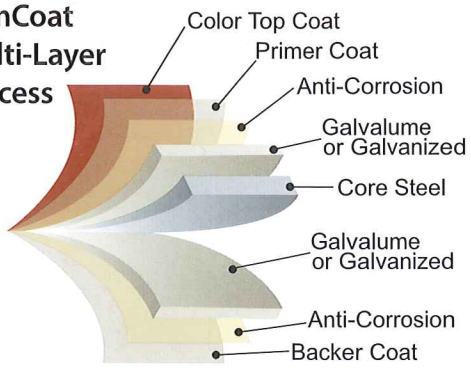

ENERGY STAR PARTNER

SEMCO SOUTHEASTERN METALS

Metal Roofing Color Guide

11801 INDUSTRY DRIVE • JACKSONVILLE, FLORIDA 32218

CRRC COOL ROOF RATING COUNCIL® MEMBER

SemCoat SP - 40 Year Warranty

Barn Red *
(SR).35 (TE).83 (SRI)36

Hawaiian Blue *
(SR).32 (TE).83 (SRI)32

Bone White *
(SR).55 (TE).83 (SRI)63

Light Stone *
(SR).55 (TE).83 (SRI)63

Burnished Slate *
(SR).25 (TE).83 (SRI)22

Marine Green *
(SR).32 (TE).83 (SRI)32
Discontinued

Charcoal Gray *
(SR).25 (TE).83 (SRI)22

Mocha Tan *
(SR).32 (TE).83 (SRI)32

Cocoa Brown *
(SR).25 (TE).83 (SRI)22

Old Town Gray *
(SR).35 (TE).83 (SRI)36

Forest Green *
(SR).25 (TE).83 (SRI)22

Reflective White *
(SR).55 (TE).83 (SRI)63

SemCoat Plus - 45 Year Warranty

Brick Red *
(SR).35 (TE).83 (SRI)36

Regal Blue
(SR).25 (TE).85 (SRI)23

Chamois Tan †
(SR).45 (TE).83 (SRI)49

Regal White *
(SR).70 (TE).83 (SRI)84

Copper Penny *
(SR).35 (TE).75 (SRI)32

Silver Dollar *
(SR).47 (TE).84 (SRI)52

Hartford Green †
(SR).25 (TE).83 (SRI)22

Slate Bronze ††
(SR).25 (TE).83 (SRI)22

Onyx Gray ††
(SR).35 (TE).83 (SRI)36

Slate Gray ††
(SR).35 (TE).83 (SRI)36

Patina Green ††
(SR).32 (TE).83 (SRI)32

* Meets or exceeds Energy Star® requirements for:
Solar Reflectance (SR), Thermal Emittance (TE), Solar Reflectance Index (SRI)

† Energy Star®/Cool Color availability in 26 gauge

†† Cool Color availability varies by gauge

NOTE: Colors shown are for reference only. Limited by printing process and viewing conditions the colors are only a close approximation. Actual metal color samples are available upon request.

MIAMI-DADE COUNTY
PRODUCT CONTROL SECTION
11805 SW 26 Street, Room 208
Miami, Florida 33175-2474
T (786) 315-2590 F (786) 315-2599
www.miamidade.gov/pera

DEPARTMENT OF PERMITTING, ENVIRONMENT, AND REGULATORY AFFAIRS
BOARD AND CODE ADMINISTRATION DIVISION

NOTICE OF ACCEPTANCE (NOA)

Southeastern Metals Manufacturing Company, Inc.
11801 Industry Drive
Jacksonville, FL. 32218

SCOPE:

This NOA is being issued under the applicable rules and regulations governing the use of construction materials. The documentation submitted has been reviewed and accepted by Miami-Dade County PERA - Product Control Section to be used in Miami Dade County and other areas where allowed by the Authority Having Jurisdiction (AHJ).

This NOA shall not be valid after the expiration date stated below. The Miami-Dade County Product Control Section (In Miami Dade County) and/or the AHJ (in areas other than Miami Dade County) reserve the right to have this product or material tested for quality assurance purposes. If this product or material fails to perform in the accepted manner, the manufacturer will incur the expense of such testing and the AHJ may immediately revoke, modify, or suspend the use of such product or material within their jurisdiction. PERA reserves the right to revoke this acceptance, if it is determined by Miami-Dade County Product Control Section that this product or material fails to meet the requirements of the applicable building code.
This product is approved as described herein, and has been designed to comply with the Florida Building Code including the High Velocity Hurricane Zone of the Florida Building Code.

DESCRIPTION: SEM-Lok Snap Standing Seam Aluminum Roof Panels

LABELING: Each unit shall bear a permanent label with the manufacturer's name or logo, city, state and following statement: "Miami-Dade County Product Control Approved", unless otherwise noted herein.

RENEWAL of this NOA shall be considered after a renewal application has been filed and there has been no change in the applicable building code negatively affecting the performance of this product.

TERMINATION of this NOA will occur after the expiration date or if there has been a revision or change in the materials, use, and/or manufacture of the product or process. Misuse of this NOA as an endorsement of any product, for sales, advertising or any other purposes shall automatically terminate this NOA. Failure to comply with any section of this NOA shall be cause for termination and removal of NOA.

ADVERTISEMENT: The NOA number preceded by the words Miami-Dade County, Florida, and followed by the expiration date may be displayed in advertising literature. If any portion of the NOA is displayed, then it shall be done in its entirety.

INSPECTION: A copy of this entire NOA shall be provided to the user by the manufacturer or its distributors and shall be available for inspection at the job site at the request of the Building Official.

This NOA consists of pages 1 through 5.
The submitted documentation was reviewed by Alex Tigera.

MIAMI-DADE COUNTY APPROVED

ROOFING ASSEMBLY APPROVAL:

Category:	Roofing
Sub-Category:	Non-Structural Metal Roofing
Material:	Aluminum
Deck Type:	Wood
Maximum Design Pressure	**-120 psf**

TRADE NAMES OF PRODUCTS MANUFACTURED OR LABELED BY APPLICANT:

Product	Dimensions	Test Specifications	Product Description
"SEM-Lok Snap-Lok Standing Seam"	l = various w = 16" min. 0.032" thick Yield Strength: Min. 22ksi	TAS 110 & TAS 125	Corrosion resistant, Kynar or SuperL II coated, pre-finished, standing seam aluminum panel.
SEM-Lok Cleat (CL-3)	l = various w = 1-3/8" h = 1"	TAS 125	Preformed, galvalume, metal cleat.
Trim Pieces	l = varies w = varies min. 0.0217" thick	TAS 110	Standard flashing and trim pieces. Manufactured for each panel width

MANUFACTURING LOCATION:

1. Jacksonville, FL.

EVIDENCE SUBMITTED:

Test Agency	Test Identifier	Test Name/Report	Date
PRI Construction Materials Technologies	SEM-013-02-02.4	TAS 125	01/19/11
Celotex Corporation Testing Services	520504	TAS 100	12/21/99

APPROVED ASSEMBLIES:

SYSTEM A-1:	"Sem-Lok Snap-Lok Standing Seam" 0.032" Aluminum Panel
Deck Type:	Wood, Non-insulated
Deck Description:	$^{19}/_{32}$" or greater plywood or wood plank.
Slope Range:	2": 12" or greater
Maximum Uplift Pressure:	**See Table A Below**
Deck Attachment:	In accordance with applicable Building Code, but in no case shall it be less than #8d galvanized ring shank common nails spaced 6" o.c. around the perimeter and in the field. In reroofing, where the deck is less that $^{19}/_{32}$" thick (Minimum $^{15}/_{32}$"). The above attachment method must be in addition to existing attachment.
Underlayment:	Minimum underlayment shall be an ASTM D 226 Type II installed with a minimum 4" side-laps and 6" end-laps. Underlayment shall be fastened with corrosion resistant tin-caps and 1¼" annular ring-shank nails, spaced 6" o.c. at all laps and two staggered rows 12" o.c. in the field of the roll. Or any approved underlayment having a current NOA.
Valleys:	Valley construction shall be in compliance with Roofing Application Standard RAS 133 and with Southeastern Metal Manufacturing Company, Inc's current published installation instructions.
Fire Barrier Board:	Any approved fire barrier having a current NOA. Refer to a current fire directory listing for fire ratings of this roofing system assembly as well as the location of the fire barrier within the assembly. See Limitation # 1.
Metal Panels and Accessories:	Install the "SEM-Lok Snap-Lok Panels" and accessories in compliance with Southeastern Metal Manufacturing Company, Inc's current published installation instructions and details. Flashing, penetrations, valley construction and other details shall be constructed in compliance with the minimum requirements provided in Roofing Application Standards RAS 133. "SEM-Lok Panels" shall be installed through the prefabricated panel slop openings with a minimum #10 pancake wood screws of sufficient length (but not less than 1") to penetrate through the sheathing a minimum of 3/16" of an inch. Fasteners shall be spaced a maximum of 7" o.c. Place cleat over male rib before securing the panel with screws. See **Detail A** herein. For perimeter and corner conditions, place a ½" wide continuous bead of Liquid Nails® Heavy Duty Construction Adhesive to the top side of the cleat along the fastening line.

TABLE A
Maximum Design Pressure

	Field	Perimeter and Corner[1]
Maximum Design Pressure	**-63.75 psf**	**-120 psf**
	With Cleat	**With Cleat**
	Without Adhesive	**With Liquid Nails® Heavy Duty Construction Adhesive**

1. Extrapolation shall not be allowed

SYSTEM LIMITATIONS

1. Fire classification is not part of this acceptance; refer to a current Approved Roofing Materials Directory for fire ratings of this product.
2. The maximum designed pressure listed herein shall be applicable to all roof pressure zones (i.e. field, perimeters, and corners). Neither rational analysis, nor extrapolation shall be permitted for enhanced fastening at enhanced pressure zones (i.e. perimeters, extended corners and corners).
3. Panels may be rolls formed in continuous lengths from eave to ridge. Maximum lengths shall be as described in Roofing Application Standard RAS 133
4. All panels shall be permanently labeled with the manufacturer's name and/or logo, and the following statement: "Miami-Dade County Product Control Approved" **or** with the Miami-Dade County Product Control Seal as seen below. All clips shall be permanently labeled with the manufacturer's name and/or logo, and/or model.

MIAMI-DADE COUNTY APPROVED

5. All products listed herein shall have a quality assurance audit in accordance with the Florida Building Code and Rule 9N-3 of the Florida Administrative Code.

PROFILE DRAWINGS
DETAIL A

"SEM-LOK SNAP LOK STANDING SEAM" ALUMINUM ROOF PANELS

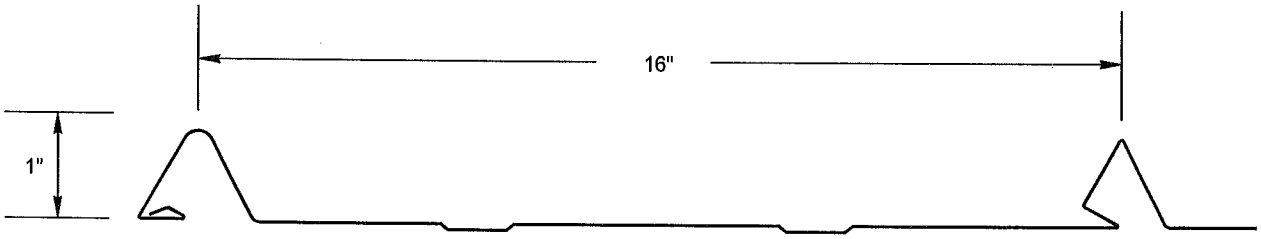

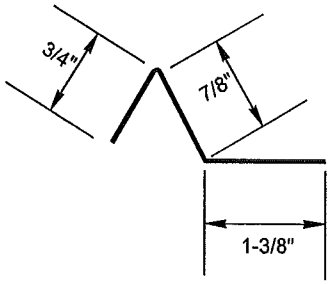

CLEAT DETAIL

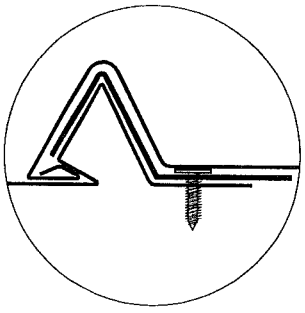

WITH CLEAT

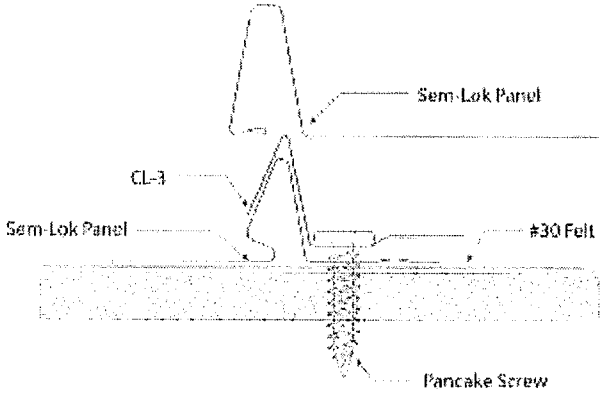

END OF THIS ACCEPTANCE

MIAMI-DADE COUNTY APPROVED

SUNSHINE ROOFING & GENERAL CONTRACTING INC

3560 INVESTMENT LN 102
WEST PALM BEACH FL 33404
TEL:561:225-7403
Renejaimes@me.com

CCC1327040

Client: DANA MCLAUGHLIN
Property: 520 N PALMWAY
LAKE WORTH , FL

Operator: SKYHIGH1

Type of Estimate: <NONE>
Date Entered: 3/1/2016 Date Assigned:

Price List: FLMI8X_JUL14
Labor Efficiency: Restoration/Service/Remodel
Estimate: 2016-03-01-0738

SCOPE OF WORK:

1.PRESSURE WASH ROOF WITH GACO WASH ROOF CLEANER
2.PRIME ROOF WITH GACO FLEX EPOXY PRIMER E-5320
3.DETAIL WORK APPLY GACO FLEX SEALER ON CURBS,PENETRATIONS,PARAPET WALLS,ROOF EDGES.
4.COAT ROOF WITH GACO FLEX S-2000 WATER PROOF SEALER

INCLUDED:MATERIAL,LABOR,PERMIT AND CLEAN UP

MANUFACTURERS WARRANTY: 10 YEARS

GRAND TOTAL:$6,525.32

TERMS 50% TO START AND 50% UPON COMPLETION

APPROVED BY:_____ DATE:_____

SUNSHINE ROOFING & GENERAL CONTRACTING INC

3560 INVESTMENT LN 102
WEST PALM BEACH FL 33404
TEL:561:225-7403
Renejaimes@me.com

CCC1327040

2016-03-01-0738

2016-03-01-0738

DESCRIPTION	QTY	UNIT PRICE	TOTAL
1. METAL & FLAT ROOF:APPLY GACO FLEX SILICONE WATER PROOF SEALER	1.00 EA @	6,524.32 =	6,524.32

SUNSHINE ROOFING & GENERAL CONTRACTING INC

3560 INVESTMENT LN 102
WEST PALM BEACH FL 33404
TEL:561:225-7403
Renejaimes@me.com

CCC1327040

Summary

Line Item Total	6,524.32
Replacement Cost Value	**$6,524.32**
Net Claim	**$6,524.32**

REFERENCES SUNSHINE ROOFING

1. Andy Chu 305-759-3821

2. . George Ashkar reroof 561-789-2555

3. Carl Salvo 561-856-6776

4. Kurtis schuttler roof &skylights 954-849-1969

5.Floyd Mckenzie roof 561-900-4241

6.John GTE Builders Siding & Framing 561-239-9838

7.Wendy Medina roof 561-632-9027

8.Bob Juska roof 561-358-3320

9. Joseph Nimney roof & waterproofing 315-269-6515

10. Jose Ramirez roof 786-286-6939

GacoFlex®

by Gaco Western®

S20 Series

The solvent-free alternative to replacing your weathered roof.

Whether your roof is large or small, flat or sloped, GacoFlex S20 Series Solvent-Free 100% Silicone Roof Coatings provide a proven, guaranteed solution for renewing your weathered and leaking roof. They can be applied to virtually any existing roof to create a durable, glossy, seamless membrane that seals and protects against permanent ponding water, ultraviolet light and severe weather. By re-coating, you not only extend the life of your roof, you avoid the need for a time-consuming and costly roof tear-off.

Guaranteed? Yes! All GacoFlex Silicone Roof Coatings carry a 50 Year Limited Material Warranty. In addition, a Labor & Material Warranty is available to Gaco Western Qualified Applicators when GacoFlex S20 Series coating is applied over E5320 2-Part Epoxy Primer/Filler and according to Gaco Western specifications.

GacoFlex S20 Series offers decades of proven performance and protection. Guaranteed.

WHY CHOOSE SOLVENT-FREE?

GacoFlex solvent-free silicone coatings are made nearly entirely of solids – 95% of what is in the can stays on the roof! The remaining 5% is a specially-formulated curing agent that works by forming a chemical bond between the coating's molecules and sets the coating in place – instead of by the evaporation of harmful solvents into the environment.

800 456 4226
gaco.com

GacoFlex S20 Series

Solvent-free 100% silicone coating | January 2014

DESCRIPTION	GacoFlex S20 Series coatings are solvent-free, single-component waterproof elastomeric moisture-curing silicone coatings.	
USAGE	GacoFlex S20 Series are ideal for use as a maintenance coating system over pre-existing elastomeric roof coatings, metal roofs, built-up roofing, mineral cap sheet, and weathered single ply membranes (EPDM, Hypalon®, and TPO/CPA) on a roofing substrate where the membrane surface is in sound condition, but requires a renewal of the membrane surface due to the normal effect of aging and use. GacoFlex S20 Series Coatings are the standard specification for liquid applied silicone coating used in sprayed-in-place polyurethane foam roofing systems. GacoFlex S20 Series Coatings may also be used over concrete, wood and many other coatings. When properly applied, the coating system provides a seamless weather-tight seal that protects the substrate from degradation caused by ultraviolet light, water and other normal weathering hazards.	
COLOR	S2000 White, S2022 Gray, S2048 Tan. (All colors not available at all locations.)	
APPLIED PRODUCT DATA		
WEATHERABILITY	Excellent durability, color stability and chalk resistance.	
TOXICITY	Not for use in contact with edible substances or potable water.	
ADHESION	Excellent adhesion to polyurethane foam and many other substrates.	
CHEMICAL RESISTANCE	Excellent solvent and chemical resistance.	
TENSILE Strength Elongation Permanent Set At Break	**ASTM D412** 550 ± 10 psi (3.79 ± .07 MPa) 150% ± 10 Approx. 1%	**S2000 Immersed in Water @150°F (66°C) for 1 year per ASTM D471** 463 psi (3.19 MPa) 125% 0%
TEAR RESISTANCE lbs/inch	**ASTM D624 Die C** 21 pli (3.8 kg(f)/cm)	11 pli (2.0 kg(f)/cm)
HARDNESS	**ASTM D2240** 55 Shore A	56 Shore A
WATER VAPOR PERMEANCE	ASTM E96	5.3 perms
	Procedure B at 0.5 mm (20 mils) thickness ± 10%; Minimum permeance requirement is 2.5 U.S. perms	
WET ADHESION TO POLYURETHANE FOAM	ASTM D903	3.5 lbs per linear inch
LOW TEMPERATURE FLEX	ASTM D522 Method B	Pass
FLAMMABILITY	ASTM E108	Class A
REFLECTANCE	ASTM C1549	0.88 (S2000 White)
EMITTANCE	ASTM C1371	0.87 (S2000 White)
PACKAGED PRODUCT DATA		
THEORETICAL COVERAGE	1.45 gallons per 100 sq. ft. provides 22 dry mils NOTE: Actual coverage may be less due to surface profile, losses due to overspray and wind, and residual coating left in the container.	
SOLIDS	96.5% by Weight (Method 4041, Fed. Std. 141) / 95% by Volume	
VOC	35 g/l	
FLASH POINT	ASTM D3278	178°F (81°C)
STORAGE STABILITY	Two years from date of manufacture when stored in sealed containers between 0°F - 80°F (-17°C - 26°C).	
APPLICATION		
MIXING	Mix before application to ensure uniform color and consistency.	
THINNING	Product should not be thinned.	
PRIMER	Existing silicone coatings should not be primed. On all other substrates, apply GacoFlex E5320 2-Part Epoxy Primer/Filler according to label directions.	
APPLICATION	Apply by brush or ¾" nap woven roller as received. For spray application, use as received; consult Gaco Western's Silicone Spray Guide SG-Silicone for more information. For cold weather application, keep material stored above 65°F (18°C). Do not apply if rain is expected within 1 hour. For application in temperatures below freezing or above 120°F (49°C), contact Gaco Western. - On smooth surfaces, apply one coat at the rate of 1.5 gallons per 100 square feet to achieve approximately 22 dry mils. - On granulated and other rough surfaces, apply two separate coats at the rate of 1 gallon per 100 square feet per coat. Allow first coat to dry a minimum of 4 hours at 55°F (13°C) or higher, or until it can be safely walked on (product is moisture cure, low humidity will result in longer dry times); recoat within 4 to 48 hours. - Coat all surfaces including expansion joint covers and flashings. Extra material is required at all edges and penetrations if neoprene sheet flashing is not used. NOTE: Application rate is job-specific. Additional material may be required to achieve 22 dry mils.	
DRY TIME	Final coat should be allowed to cure 24 to 48 hours, depending on temperature and humidity, before suitable for light foot traffic.	
CLEAN UP	Clean application tools and equipment with GacoFlex Silicone Solvent. Recirculate through lines and gun until residual coating is removed. DO NOT USE WATER OR RECLAIMED SOLVENTS.	

For specific Safety and Health information please refer to Material Safety Data Sheet.

CEMENTS AND COATINGS FOR ROOFING SYSTEMS CLASSIFIED BY UNDERWRITERS LABORATORIES INC. AS TO AN EXTERNAL FIRE EXPOSURE ONLY. ROOF

NOA#12-0426.06
Florida Product Control FL14724-R1

Texas Department of Insurance - Product Evaluation RC 353

*Applies only to S2000 (white)

MKGF1003 0714

Gaco Western
SINCE 1965

gaco.com | 800 456 4226

Gaco Western is a recognized leader in innovative silicone roofing systems, and offers best-of-class waterproofing and insulation solutions for a variety of commercial, industrial and residential applications. Founded in 1955, Gaco Western remains today a family-owned business with its roots in technology and product innovation.

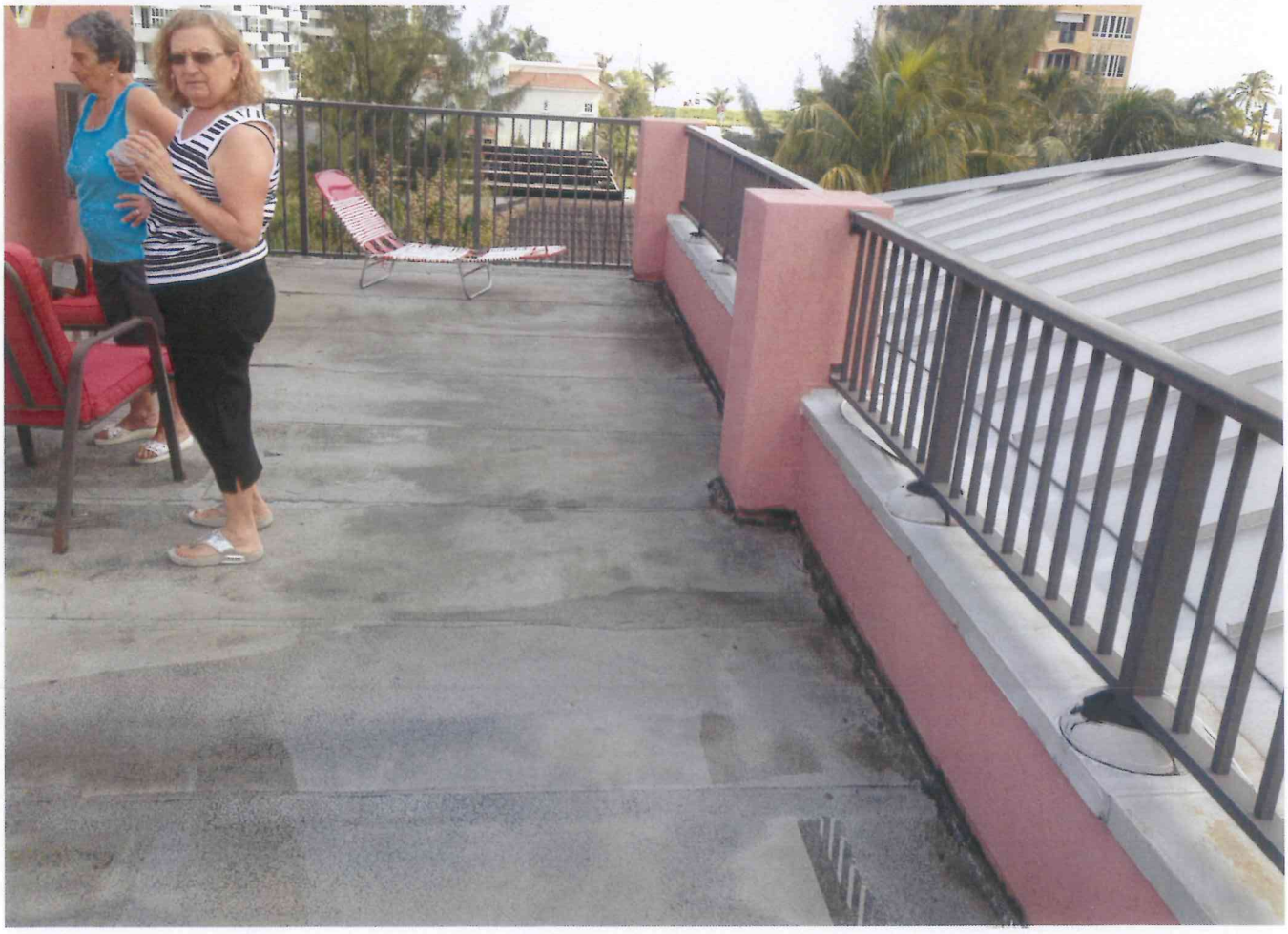

Palm Beach County
(561) 732-0656

Jupiter & Tequesta
(561) 747-8022

Boca Raton & Broward County
(954) 421-5733

Statewide
800-281-1557

Facsimile
(561)-732-0786

P.O. DRAWER: 8
BOYNTON BEACH, FL 33425
www.gustafsonindustries.com

GJ Roofers
GUSTAFSON INDUSTRIES
"We've got you covered...since 1948!"

OWNER/AGENT	JOB CONTACT
Dana Mclaughlin	Phone: _____
520 N Palm Way	Cell: 628-2160
Lake Worth FL 33460	E-mail: dmcl6@comcast.net

Date submitted: 3/9/2016

MAINTENANCE PROPOSAL: This is for maintenance only and there are no warranties included.

Scope of Work:

The current outdated shingle metal roof, I believe only one metal company even makes this style anymore and it is very expensive, is corroding and peeling badly. While we could coat it to make it look better than the metal shingles this is not recommended because of the roofs condition. It would not be long at all before the coating would start to blister and peel off. Recommend a new asphalt shingle roof, like your neighbors have, to aesthetically fit in.

Price to coat (not recommended): $6,500.00
Terms: 50% down balance due upon completion.

Other Contract Conditions:

Anything not itemized in this contract will not be included.

It is understood that this proposal, at the option of Gustafson Industries (GI), may be withdrawn, if not accepted by you within thirty days from the above date; and that this estimate when accepted and signed by you, and thereafter accepted by an officer of GI, constitutes an entire and binding contract between us. All conditions and terms must appear in writing on this contract. Oral promises, prior, subsequent or contemporaneous to this contract are not enforceable against GI, or its officers, agents, representatives, or employees.

GI is not responsible for damage to driveways, sidewalks, or any areas inside the curb line as a result of GI or Supplier trucks or equipment used in the delivery or removal of material. GI is not responsible for damage to interior or cracks to ceilings from rotted decking or vibration; damage to grass, or other plant life; for any change in insulation value with new roof systems; standing or ponding water on roofs; dust or dirt infiltration to interior; mold or algae growth on new roof or on any part of interior, even if GI material or labor are found to be responsible.

Removal and replacement of obstructive items, such as screen enclosures, gutters, awnings, communication cables, A/C units, roof signs, solar units, other such obstructive items, as maybe required to complete the work contracted for, will be the customers responsibility and expense. Damage to roof mounted A/C, solar, other equipment, or the obstructive items mentioned above is not the responsibility of GI for any reasons.

Unless additionally noted above, where more than one roof has been installed that must be removed, an extra $.50 per square foot for each additional roof or layer of insulation will be charged. Damaged or wet insulation boards requiring replacement to be an extra charge of $2.00 per square foot, per board layer, each board layer defined as one inch board thickness or less per layer. Removal or disposal of asbestos products is not included with this contract, should asbestos be found that requires monitoring or an asbestos license for removal, additional owner's expense will be incurred accordingly.

All payments of amounts due are payable no later than completion of the work contracted for. In no event should you or any other person, corporate or entity withhold any amounts against GI. We reserve the right to correct any and all problems resulting from or arising out of the performance of this contract where we are found to be responsible and do not authorized personal other than that of GI to perform these services. Such unauthorized repairs or correctional work will not be the responsibility of GI. The maximum legal rate of interest will be charged on accounts not paid within 30 days from any invoice, such interest to commence on the 31st day. Recording a construction lien will result in a $100 fee to the owner. GI will retain fifty percent of the deposit, plus permit, engineering fees, or any custom material costs, if owner prior to commencement of work cancels the contract. In any event, engineering fees for permit or inspections will be the responsibility of the owner.

Any warranty work requested on areas not warranted will result in an $85.00 per man per hour charge. Minimum two hour charge. Warranty does not extend to leaks on recreational or balcony flat decks, color fading of tiles, or mildew growth on finished roof covering, for any reason.

In no event shall the liability of GI exceed either the contract price or the direct costs of labor or materials necessary to comply with this contract, which ever is less. You agree to reimburse GI for all attorney's fees and costs incurred by GI in connections with the enforcement of this contract or the collection of any sums due to GI by you, whether or not suit is filed.

No warranties or guarantees, whether expressed or implied, including any such warranties of merchantability or fitness for particular purpose shall apply unless specified in writing in conjunction with this contract. Warranties or guarantees within this contract commence on the last day worked and are not transferable; are limited to one year unless otherwise noted; are limited to the repair of roof leaks and do not extend to interior damage for any reason. Warranty becomes void in the event of an Act of God, hurricane, tornado, hail, or some other extreme condition. Account must be paid timely and in full to merit warranty service work.

All payments are to be made to Gustafson Industries, Inc.

Gustafson Industries Representative: Yvon Grandbois 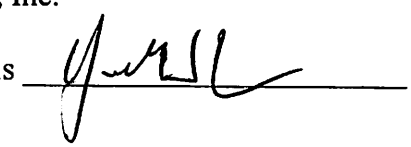

Owner: _____

Printed name: _____ Date: _____

March 3, 2016

Dana McLaughlin
520 N. Palmway
Lake Worth, FL 33460

Re: Roof Inspection

Dear Dana McLaughlin,

Pursuant to your request and authorization we performed a roof evaluation of the building located at 520 N Palmway in Lake Worth, Florida.

Our inspection was conducted in a visual, non-destructive manner. Listed below are the deficiencies in the roof.

1. The metal shingles have excessive rusting throughout the entire roof.
2. The drip edge flashings have been damaged and are rusted as well.

In closing, we feel that the 520 N Palmway property has major deficiencies and cannot be coated or repaired. In my professional experience, I believe that the roof is allowing water intrusion, causing rotted and deteriorated wood even though there is no evidence in the interior of the house. I recommend a total roof replacement to be scheduled at the earliest opportunity so the performance of the building/unit is not compromised further.

If you should need further assistance please contact myself at 561 676-8612.

Respectfully submitted,

Mark Molsbee

226 S F Street, Lake Worth, FL 33460
Office (561) 318-8624, Fax (561) 318-8627
Florida License #CCC1327429

226 S F Street, Lake Worth, FL 33460
Office (561) 318-8624, Fax (561) 318-8627
Florida License #CCC1327429

NATIONAL PARK SERVICE

STANDARDS FOR REHABILITATION AND GUIDELINES FOR REHABILITATING HISTORIC BUILDINGS

EXTERIOR FEATURES

roofs

Identify Protect Repair Replace Missing feature Alterations/Additions

Identify, Retain and Preserve

RECOMMENDED

Identifying, retaining, and preserving roofs--and their functional and decorative features--that are important in defining the overall historic character of the building. This includes the roof's shape, such as hipped, gambrel, and mansard; decorative features such as cupolas, cresting chimneys, and weathervanes; and roofing material such as slate, wood, clay tile, and metal, as well as its size, color, and patterning.

These slate and copper mansard roofs are distinctive features of their urban setting and need to be retained and repaired, or if too deteriorated to repair, replaced in kind to match. Photo: NPS files.

NOT RECOMMENDED

Radically changing, damaging, or destroying roofs which are important in defining the overall historic character of the building so that, as a result, the character is diminished.

Removing a major portion of the roof or roofing material that is repairable, then reconstructing it with new material in order to create a uniform, or "improved" appearance.

Changing the configuration of a roof by adding new features such as dormer windows, vents, or skylights so that the historic character is diminished.

Stripping the roof of sound historic material such as slate, clay tile, wood, and architectural metal.

Applying paint or other coatings to roofing material which has been historically uncoated.

top

-GUIDELINES-

The Approach

Exterior Materials
Masonry
Wood
Architectural Metals

Exterior Features
Roofs
Windows
Entrances + Porches
Storefronts

Interior Features
Structural System
Spaces/Features/Finishes
Mechanical Systems

Site

Setting

Special Requirements
Energy Efficiency
New Additions
Accessibility
Health + Safety

THE STANDARDS

Protect and Maintain

RECOMMENDED

Protecting and maintaining a roof by cleaning the gutters and downspouts and replacing deteriorated flashing. Roof sheathing should also be checked for proper venting to prevent moisture condensation and water penetration; and to ensure that materials are free from insect infestation.

This new step flashing overlaps the next in a downward slope to shed water draining down the face of the chimney and the roof. Photo: © John Leeke.

Providing adequate anchorage for roofing material to guard against wind damage and moisture penetration.

Protecting a leaking roof with plywood and building paper until it can be properly repaired.

NOT RECOMMENDED

Failing to clean and maintain gutters and downspouts properly so that water and debris collect and cause damage to roof fasteners, sheathing, and the underlying structure.

Allowing roof fasteners, such as nails and clips to corrode so that roofing material is subject to accelerated deterioration.

Permitting a leaking roof to remain unprotected so that accelerated deterioration of historic building materials–masonry, wood, plaster, paint and structural members–occurs.

top

Repair

RECOMMENDED

Repairing a roof by reinforcing the historicmaterials which comprise roof features. Repairs will also generally include the limited replacement in kind--or with compatible substitute material–of those extensively deteriorated or missing parts of features when there are surviving prototypes such as cupola louvers, dentils, dormer roofing; or slates, tiles, or wood shingles on a main roof.

After removing the deteriorated slate and sliding the new slate into place, it is secured with a copper nail. A copper bib

(shown here) is formed to protect the newly created nail hole. Finally, a slate hammer is used to push the bib in place over the nail head. Photo: Jeffrey S. Levine.

NOT RECOMMENDED

Replacing an entire roof feature such as a cupolaor dormer when repair of the historic materials and limited replacement of deteriorated or missing parts are appropriate.

Failing to reuse intact slate or tile when only the roofing substrate needs replacement.

Using a substitute material for the replacement part that does not convey the visual appearance of the surviving parts of the roof or that is physically or chemically incompatible.

top

Replace

RECOMMENDED

Replacing in kind an entire feature of the roof that is too deteriorated to repair–if the overall form and detailing are still evident–using the physicalevidence as a model to reproduce the feature. Examples can include a large section of roofing, or a dormer or chimney. If using the same kind of material is not technically or economically feasible, then a compatible substitute material may be considered.

NOT RECOMMENDED

Removing a feature of the roof that is unrepairable, such as a chimney or dormer, and not replacing it; or replacing it with a new feature that does not convey the same visual appearance

Asphalt shingles are an incompatible replacement substitute for the original Spanish clay tiles. Photo: NPS files.

top

The following work is highlighted to indicate that it represents the particularly complex technical or design aspects of Rehabilitation projects and should only be considered after the preservation concerns listed above have been addressed.

Design for the Replacement of Missing Historic

Features

RECOMMENDED

Designing and constructing a new feature when the historic feature is completely missing, such as chimney or cupola. It may be an accurate restoration using historical, pictorial, and physical documentation; or be a new design that is compatible with the size, scale, material, and color of the historic building.

NOT RECOMMENDED

Creating a false historical appearance because the replaced feature is based on insufficient historical, pictorial, and physical documentation.

Introducing a new roof feature that is incompatible in size, scale, material and color.

top

The following work is highlighted to indicate that it represents the particularly complex technical or design aspects of Rehabilitation projects and should only be considered after the preservation concerns listed above have been addressed.

Alterations/Additions for the New Use

RECOMMENDED

Installing mechanical and service equipment on the roof such as air conditioning, transformers, or solar collectors when required for the new use so that they are inconspicuous from the public right-of-way and do not damage or obscure character-defining features.

Designing additions to roofs such as residential, office, or storage spaces; elevator housing; decks and terraces; or dormers or skylights when required by the new use so that they are inconspicuous from the public right-of-way and do not damage or obscure character-defining features.

NOT RECOMMENDED

Installing mechanical or service equipment so that it damages or obscures character-defining features; or is conspicuous from the public right-of-way.

Radically changing a character-defining roof shape or damaging or destroying character-defining roofing material as a result of incompatible design or improper installation techniques.

HISTORICAL OVERVIEW - PRESERVING - **rehabilitating** - RESTORING - RECONSTRUCTING main - credits - email

4 PRESERVATION BRIEFS

HABS

Roofing for Historic Buildings

Sarah M. Sweetser

U.S. Department of the Interior
National Park Service
Cultural Resources
Heritage Preservation Services

Significance of the Roof

A weather-tight roof is basic in the preservation of a structure, regardless of its age, size, or design. In the system that allows a building to work as a shelter, the roof sheds the rain, shades from the sun, and buffers the weather.

During some periods in the history of architecture, the roof imparts much of the architectural character. It defines the style and contributes to the building's aesthetics. The hipped roofs of Georgian architecture, the turrets of Queen Anne, the Mansard roofs, and the graceful slopes of the Shingle Style and Bungalow designs are examples of the use of roofing as a major design feature.

But no matter how decorative the patterning or how compelling the form, the roof is a highly vulnerable element of a shelter that will inevitable fail. A poor roof will permit the accelerated deterioration of historic building materials—masonry, wood, plaster, paint—and will cause general disintegration of the basic structure. Furthermore, there is an urgency involved in repairing a leaky roof since such repair costs will quickly become prohibitive. Although such action is desirable as soon as a failure is discovered, temporary patching methods should be carefully chosen to prevent inadvertent damage to sound or historic roofing materials and related features. Before any repair work is performed, the historic value of the materials used on the roof should be understood. Then a complete internal and external inspection of the roof should be planned to determine all the causes of failure and to identify the alternatives for repair or replacement of the roofing.

Historic Roofing Materials in America

Clay Tile: European settlers used clay tile for roofing as early as the mid-17th century; many pantiles (S-curved tiles), as well as flat roofing tiles, were used in Jamestown, Virginia. In some cities such as New York and Boston, clay was popularly used as a precaution against such fire as those that engulfed London in 1666 and scorched Boston in 1679.

Tiles roofs found in the mid-18th century Moravian settlements in Pennsylvania closely resembled those found in Germany. Typically, the tiles were 14–15″ long, 6–7″ wide with a curved butt. A lug on the back allowed the tiles to hang on the lathing without nails or pegs. The tile surface was usually scored with finger marks to promote drainage. In the Southwest, the tile roofs of the Spanish missionaries (mission tiles) were first manufactured (ca. 1780) at the Mission San Antonio de Padua in California. These semicircular tiles were made by molding clay over sections of logs, and they were generally 22″ long and tapered in width.

Repairs on this pantile roof were made with new tiles held in place with metal hangers. (Main Building, Ellis Island, New York)

The plain or flat rectangular tiles most commonly used from the 17th through the beginning of the 19th century measured about 10″ by 6″ by ½″, and had two holes at one end for a nail or peg fastener. Sometimes mortar was applied between the courses to secure the tiles in a heavy wind.

In the mid-19th century, tile roofs were often replaced by sheet-metal roofs, which were lighter and easier to install and maintain. However, by the turn of the century, the Romanesque Revival and Mission style buildings created a new demand and popularity for this picturesque roofing material.

Slate: Another practice settlers brought to the New World was slate roofing. Evidence of roofing slates have been found also among the ruins of mid-17th-century Jamestown. But because of the cost and the time required to obtain the material, which was mostly imported from Wales, the use of slate was initially limited. Even in Philadelphia (the second largest city in the English-speaking world at the time of the Revolution) slates were so rare that "The Slate Roof House" distinctly referred to William Penn's home built late in the 1600s. Sources of native slate were known to exist along the eastern seaboard from Maine to Virginia, but difficulties in inland transportation limited its availability to the cities, and contributed to its expense. Welsh slate continued to be imported until the development of canals and railroads in the mid-19th century made American slate more accessible and economical.

Slate was popular for its durability, fireproof qualities, and

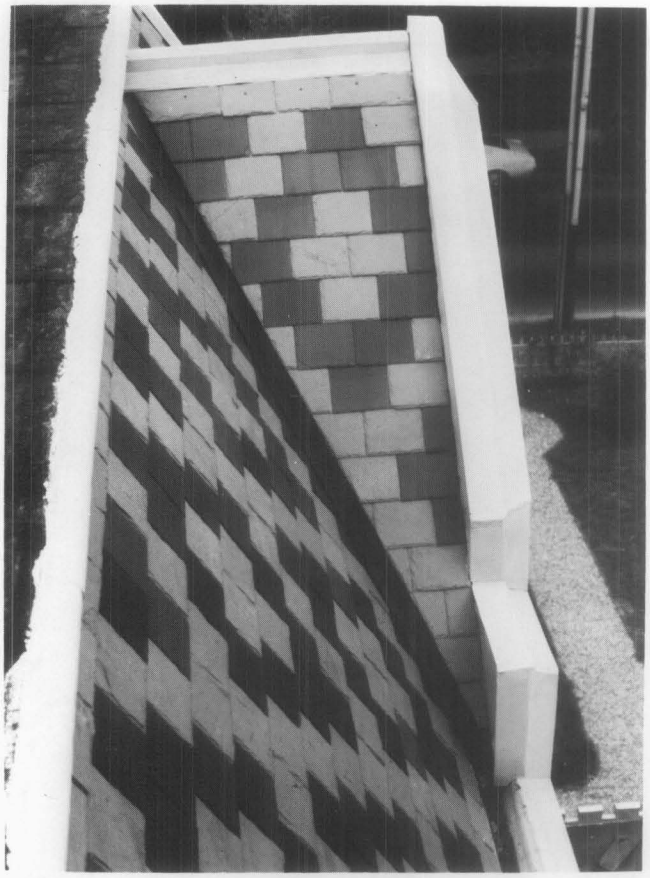

The Victorians loved to used different colored slates to create decorative patterns on their roofs, an effect which cannot be easily duplicated by substitute materials. Before any repair work on a roof such as this, the slate sizes, colors, and position of the patterning should be carefully recorded to assure proper replacement. (Ebenezer Maxwell Mansion, Philadelphia, Pennsylvania, photo courtesy of William D. Hershey)

Replacement of particular historic details is important to the individual historic character of a roof, such as the treatment at the eaves of this rounded butt wood shingle roof. Also note that the surface of the roof was carefully sloped to drain water away from the side of the dormer. In the restoration, this function was augmented with the addition of carefully concealed modern metal flashing. (Mount Vernon, Virginia)

Galvanized sheet-metal shingles imitating the appearance of pantiles remained popular from the second half of the 19th century into the 20th century. (Episcopal Church, now the Jerome Historical Society Building, Jerome, Arizona, 1927)

aesthetic potential. Because slate was available in different colors (red, green, purple, and blue-gray), it was an effective material for decorative patterns on many 19th-century roofs (Gothic and Mansard styles). Slate continued to be used well into the 20th century, notably on many Tudor revival style buildings of the 1920s.

Shingles: Wood shingles were popular throughout the country in all periods of building history. The size and shape of the shingles as well as the detailing of the shingle roof differed according to regional craft practices. People within particular regions developed preferences for the local species of wood that most suited their purposes. In New England and the Delaware Valley, white pine was frequently used: in the South, cypress and oak; in the far west, red cedar or redwood. Sometimes a protective coating was applied to increase the durability of the shingle such as a mixture of brick dust and fish oil, or a paint made of red iron oxide and linseed oil.

Commonly in urban areas, wooden roofs were replaced with more fire resistant materials, but in rural areas this was not a major concern. On many Victorian country houses, the practice of wood shingling survived the technological advances of metal roofing in the 19th century, and near the turn of the century enjoyed a full revival in its namesake, the Shingle Style. Colonial revival and the Bungalow styles in the 20th century assured wood shingles a place as one of the most fashionable, domestic roofing materials.

Metal: Metal roofing in America is principally a 19th-century phenomenon. Before then the only metals commonly used were lead and copper. For example, a lead roof covered "Rosewell," one of the grandest mansions in 18th-century Virginia. But more often, lead was used for protective flashing. Lead, as well as copper, covered roof surfaces where wood, tile, or slate shingles were inappropriate because of the roof's pitch or shape.

Copper with standing seams covered some of the more notable early American roofs including that of Christ Church (1727–1744) in Philadelphia. Flat-seamed copper was used on many domes and cupolas. The copper sheets were imported from England until the end of the 18th century when facilities for rolling sheet metal were developed in America.

Sheet iron was first known to have been manufactured here by the Revolutionary War financier, Robert Morris, who had a rolling mill near Trenton, New Jersey. At his mill Morris produced the roof of his own Philadelphia mansion, which he started in 1794. The architect Benjamin H. Latrobe used sheet iron to replace the roof on Princeton's "Nassau Hall," which had been gutted by fire in 1802.

The method for corrugating iron was originally patented in England in 1829. Corrugating stiffened the sheets, and allowed greater span over a lighter framework, as well as reduced installation time and labor. In 1834 the American architect William Strickland proposed corrugated iron to cover his design for the market place in Philadelphia.

Galvanizing with zinc to protect the base metal from rust was developed in France in 1837. By the 1850s the material was used on post offices and customhouses, as well as on train sheds and factories. In 1857 one of the first metal roofs in the

Repeated repair with asphalt, which cracks as it hardens, has created a blistered surface on this sheet-metal roof and built-in gutter, which will retain water. Repairs could be made by carefully heating and scraping the surface clean, repairing the holes in the metal with a flexible mastic compound or a metal patch, and coating the surface with a fibre paint. (Roane County Courthouse, Kingston, Tennessee, photo courtesy of Building Conservation Technology, Inc.)

South was installed on the U.S. Mint in New Orleans. The Mint was thereby "fireproofed" with a 20-gauge galvanized, corrugated iron roof on iron trusses.

Tin-plate iron, commonly called "tin roofing," was used extensively in Canada in the 18th century, but it was not as common in the United States until later. Thomas Jefferson was an early advocate of tin roofing, and he installed a standing-seam tin roof on "Monticello" (ca. 1770–1802). The Arch Street Meetinghouse (1804) in Philadelphia had tin shingles laid in a herringbone pattern on a "piazza" roof.

However, once rolling mills were established in this country, the low cost, light weight, and low maintenance of tin plate made it the most common roofing material. Embossed tin shingles, whose surfaces created interesting patterns, were popular throughout the country in the late 19th century. Tin roofs were kept well-painted, usually red; or, as the architect A. J. Davis suggested, in a color to imitate the green patina of copper.

Terne plate differed from tin plate in that the iron was dipped in an alloy of lead and tin, giving it a duller finish. Historic, as well as modern, documentation often confuses the two, so much that it is difficult to determine how often actual "terne" was used.

Zinc came into use in the 1820s, at the same time tin plate was becoming popular. Although a less expensive substitute for lead, its advantages were controversial, and it was never widely used in this country.

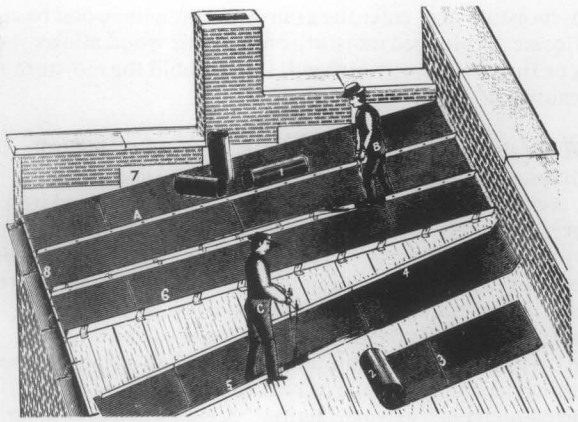

A Chicago firm's catalog dated 1896 illustrates a method of unrolling, turning the edges, and finishing the standing seam on a metal roof.

Tin shingles, commonly embossed to imitate wood or tile, or with a decorative design, were popular as an inexpensive, textured roofing material. These shingles $8^3/_8$ inch by $12^1/_2$ inch on the exposed surface) were designed with interlocking edges, but they have been repaired by surface nailing, which may cause future leakage. (Ballard House, Yorktown, Virgina, photo by Gordie Whittington, National Park Service)

Other Materials: Asphalt shingles and roll roofing were used in the 1890s. Many roofs of asbestos, aluminum, stainless steel, galvinized steel, and lead-coated copper may soon have historic values as well. Awareness of these and other traditions of roofing materials and their detailing will contribute to more sensitive preservation treatments.

Locating the Problem

Failures of Surface Materials

When trouble occurs, it is important to contact a professional, either an architect, a reputable roofing contractor, or a craftsman familiar with the inherent characteristics of the particular historic roofing system involved. These professionals may be able to advise on immediate patching procedures and help plan more permanent repairs. A thorough examination of the roof should start with an appraisal of the existing condition and quality of the roofing material itself. Particular attention should be given to any southern slope because year-round exposure to direct sun may cause it to break down first.

Wood: Some historic roofing materials have limited life expectancies because of normal organic decay and "wear." For example, the flat surfaces of wood shingles erode from exposure to rain and ultraviolet rays. Some species are more hardy than others, and heartwood, for example, is stronger and more durable than sapwood.

Ideally, shingles are split with the grain perpendicular to

the surface. This is because if shingles are sawn across the grain, moisture may enter the grain and cause the wood to deteriorate. Prolonged moisture on or in the wood allows moss or fungi to grow, which will further hold the moisture and cause rot.

Metal: Of the inorganic roofing materials used on historic buildings, the most common are perhaps the sheet metals: lead, copper, zinc, tin plate, terne plate, and galvanized iron. In varying degrees each of these sheet metals are likely to deteriorate from chemical action by pitting or streaking. This can be caused by airborn pollutants; acid rainwater; acids from lichen or moss; alkalis found in lime mortars or portland cement, which might be on adjoining features and washes down on the roof surface; or tannic acids from adjacent wood sheathings or shingles made of red cedar or oak.

Corrosion from "galvanic action" occurs when dissimilar metals, such as copper and iron, are used in direct contact. Corrosion may also occur even though the metals are physically separated; one of the metals will react chemically against the other in the presence of an electrolyte such as rainwater. In roofing, this situation might occur when either a copper roof is decorated with iron cresting, or when steel nails are used in copper sheets. In some instances the corrosion can be prevented by inserting a plastic insulator between the dissimilar materials. Ideally, the fasteners should be a metal sympathetic to those involved.

Iron rusts unless it is well-painted or plated. Historically this problem was avoided by use of tin plating or galvinizing. But this method is durable only as long as the coating remains intact. Once the plating is worn or damaged, the exposed iron will rust. Therefore, any iron-based roofing material needs to be undercoated, and its surface needs to be kept well-painted to prevent corrosion.

One cause of sheet metal deterioration is fatigue. Depending upon the size and the gauge of the metal sheets, wear and metal failure can occur at the joints or at any protrusions in the sheathing as a result from the metal's alternating movement to thermal changes. Lead will tear because of "creep," or the gravitational stress that causes the material to move down the roof slope.

Slate: Perhaps the most durable roofing materials are slate and tile. Seemingly indestructable, both vary in quality. Some slates are hard and tough without being brittle. Soft slates are more subject to erosion and to attack by airborne and rainwater chemicals, which cause the slates to wear at nail holes, to delaminate, or to break. In winter, slate is very susceptible to breakage by ice, or ice dams.

Tile: Tiles will weather well, but tend to crack or break if hit, as by tree branches, or if they are walked on improperly. Like slates, tiles cannot support much weight. Low quality tiles that have been insufficiently fired during manufacture, will craze and spall under the effects of freeze and thaw cycles on their porous surfaces.

Failures of Support Systems

Once the condition of the roofing material has been determined, the related features and support systems should be examined on the exterior and on the interior of the roof. The gutters and downspouts need periodic cleaning and maintenance since a variety of debris fill them, causing water to back up and seep under roofing units. Water will eventually cause fasteners, sheathing, and roofing structure to deteriorate. During winter, the daily freeze-thaw cycles can cause ice floes to develop under the roof surface. The pressure from these ice floes will dislodge the roofing material, especially slates, shingles, or tiles. Moreover, the buildup of ice dams above the gutters can trap enough moisture to rot the sheathing or the structural members.

Many large public buildings have built-in gutters set within the perimeter of the roof. The downspouts for these gutters may run within the walls of the building, or drainage may be through the roof surface or through a parapet to exterior downspouts. These systems can be effective if properly maintained; however, if the roof slope is inadequate for good runoff, or if the traps are allowed to clog, rainwater will form pools on the roof surface. Interior downspouts can collect debris and thus back up, perhaps leaking water into the surrounding walls. Exterior downspouts may fill with water, which in cold weather may freeze and crack the pipes. Conduits from the built-in gutter to the exterior downspout may also leak water into the surrounding roof structure or walls.

Failure of the flashing system is usually a major cause of roof deterioration. Flashing should be carefully inspected for failure caused by either poor workmanship, thermal stress, or metal deterioration (both of flashing material itself and of the fasteners). With many roofing materials, the replacement of flashing on an existing roof is a major operation, which may require taking up large sections of the roof surface. Therefore, the installation of top quality flashing material on

This detail shows slate delamination caused by a combination of weathering and pollution. In addition, the slates have eroded around the repair nails, incorrectly placed in the exposed surface of the slates. (Lower Pontalba Building, New Orleans, photo courtesy of Building Conservation Technology, Inc.)

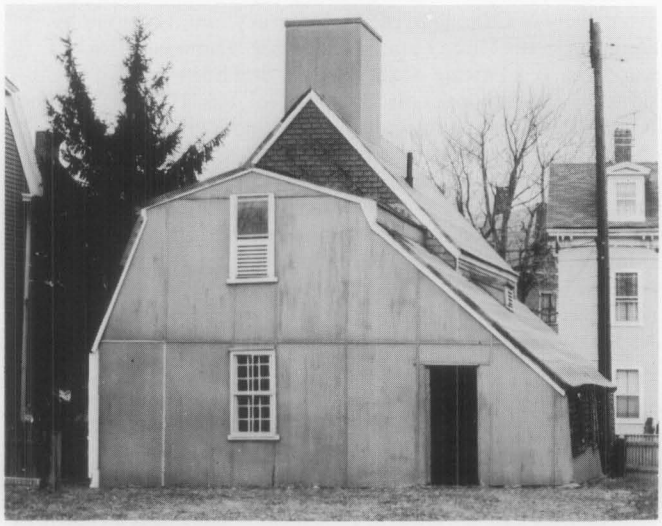

Temporary stabilization or "mothballing" with materials such as plywood and building paper can protect the roof of a project until it can be properly repaired or replaced. (Narbonne House, Salem, Massachusetts)

These two views of the same house demonstrate how the use of a substitute material can drastically affect the overall character of a structure. The textural interest of the original tile roof was lost with the use of asphalt shingles. Recent preservation efforts are replacing the tile roof. (Frank House, Kearney, Nebraska, photo courtesy of the Nebraska State Historical Society, Lincoln, Nebraska)

a new or replaced roof should be a primary consideration. *Remember, some roofing and flashing materials are not compatible.*

Roof fasteners and clips should also be made of a material compatible with all other materials used, or coated to prevent rust. For example, the tannic acid in oak will corrode iron nails. Some roofs such as slate and sheet metals may fail if nailed too rigidly.

If the roof structure appears sound and nothing indicates recent movement, the area to be examined most closely is the roof substrate—the sheathing or the battens. The danger spots would be near the roof plates, under any exterior patches, at the intersections of the roof planes, or at vertical surfaces such as dormers. Water penetration, indicating a breach in the roofing surface or flashing, should be readily apparent, usually as a damp spot or stain. Probing with a small pen knife may reveal any rot which may indicate previously undetected damage to the roofing membrane. Insect infestation evident by small exit holes and frass (a sawdust-like debris) should also be noted. Condensation on the underside of the roofing is undesirable and indicates improper ventilation. Moisture will have an adverse effect on any roofing material; a good roof stays dry inside and out.

Repair or Replace

Understanding potential weaknesses of roofing material also requires knowledge of repair difficulties. Individual slates can be replaced normally without major disruption to the rest of the roof, but replacing flashing on a slate roof can require substantial removal of surrounding slates. If it is the substrate or a support material that has deteriorated, many surface materials such as slate or tile can be reused if handled carefully during the repair. Such problems should be evaluated at the outset of any project to determine if the roof can be effectively patched, or if it should be completely replaced.

Will the repairs be effective? Maintenance costs tend to multiply once trouble starts. As the cost of labor escalates, repeated repairs could soon equal the cost of a new roof.

The more durable the surface is initially, the easier it will be to maintain. Some roofing materials such as slate are expensive to install, but if top quality slate and flashing are used, it will last 40–60 years with minimal maintenance. Although the installation cost of the roof will be high, low maintenance needs will make the lifetime cost of the roof less expensive.

Historical Research

In a restoration project, research of documents and physical investigation of the building usually will establish the roof's history. Documentary research should include any original plans or building specifications, early insurance surveys, newspaper descriptions, or the personal papers and files of people who owned or were involved in the history of the building. Old photographs of the building might provide evidence of missing details.

Along with a thorough understanding of any written history of the building, a physical investigation of the roofing and its structure may reveal information about the roof's construction history. Starting with an overall impression of the structure, are there any changes in the roof slope, its configuration, or roofing materials? Perhaps there are obvious patches or changes in patterning of exterior brickwork where a gable roof was changed to a gambrel, or where a whole upper story was added. Perhaps there are obvious stylistic changes in the roof line, dormers, or ornamentation. These observations could help one understand any important alteration, and could help establish the direction of further investigation.

Because most roofs are physically out of the range of careful scrutiny, the "principle of least effort" has probably limited the extent and quality of previous patching or replacing, and usually considerable evidence of an earlier roof surface remains. Sometimes the older roof will be found as an underlayment of the current exposed roof. Original roofing may still be intact in awkward places under later features on a roof. Often if there is any unfinished attic space, remnants of roofing may have been dropped and left when the roof was being built or repaired. If the configuration of the roof has been changed, some of the original material might still be in place under the existing roof. Sometimes whole sections of the roof and roof framing will have been left intact under the higher roof. The profile and/or flashing of the earlier roof may be apparent on the interior of the walls at the level of the alteration. If the sheathing or lathing appears to have survived changes in the roofing surface, they may contain evidence of the roofing systems. These may appear either as dirt marks, which provide "shadows" of a roofing material, or as nails broken or driven down into the wood, rather than pulled out during previous alterations or repairs. Wooden headers in the roof framing may indicate that earlier chimneys or skylights have been removed. Any metal ornamentation that might have existed may be indicated by anchors or unusual markings along the ridge or at other edges of the roof. This primary

evidence is essential for a full understanding of the roof's history.

Caution should be taken in dating early "fabric" on the evidence of a single item, as recycling of materials is not a mid-20th-century innovation. Carpenters have been reusing materials, sheathing, and framing members in the interest of economy for centuries. Therefore, any analysis of the materials found, such as nails or sawmarks on the wood, requires an accurate knowledge of the history of local building practices before any final conclusion can be accurately reached. It is helpful to establish a sequence of construction history for the roof and roofing materials; any historic fabric or pertinent evidence in the roof should be photographed, measured, and recorded for future reference.

During the repair work, useful evidence might unexpectedly appear. It is essential that records be kept of any type of work on a historic building, before, during, and after the project. Photographs are generally the easiest and fastest method, and should include overall views and details at the gutters, flashing, dormers, chimneys, valleys, ridges, and eaves. All photographs should be immediately labeled to insure accurate identification at a later date. Any patterning or design on the roofing deserves particular attention. For example, slate roofs are often decorative and have subtle changes in size, color, and texture, such as a gradually decreasing coursing length from the eave to the peak. If not carefully noted before a project begins, there may be problems in replacing the surface. The standard reference for this phase of the work is *Recording Historic Buildings,* compiled by Harley J. McKee for the Historic American Buildings Survey, National Park Service, Washington, D.C., 1970.

Replacing the Historic Roofing Material

Professional advice will be needed to assess the various aspects of replacing a historic roof. With some exceptions, most historic roofing materials are available today. If not, an architect or preservation group who has previously worked with the same type material may be able to recommend suppliers. Special roofing materials, such as tile or embossed metal shingles, can be produced by manufacturers of related products that are commonly used elsewhere, either on the exterior or interior of a structure. With some creative thinking and research, the historic materials usually can be found.

Because of the roof's visibility, the slate detailing around the dormers is important to the character of this structure. Note how the slates swirl from a horizontal pattern on the main roof to a diamond pattern on the dormer roofs and side walls. (18th and Que Streets, NW, Washington, D.C.)

Craft Practices: Determining the craft practices used in the installation of a historic roof is another major concern in roof restoration. Early builders took great pride in their work, and experience has shown that the "rustic" or irregular designs commercially labled "Early American" are a 20th-century invention. For example, historically, wood shingles underwent several distinct operations in their manufacture including splitting by hand, and smoothing the surface with a draw knife. In modern nomenclature, the same item would be a "tapersplit" shingle which has been dressed. Unfortunately, the rustic appearance of today's commercially available "handsplit" and re-sawn shingle bears no resemblance to the hand-made roofing materials used on early American buildings.

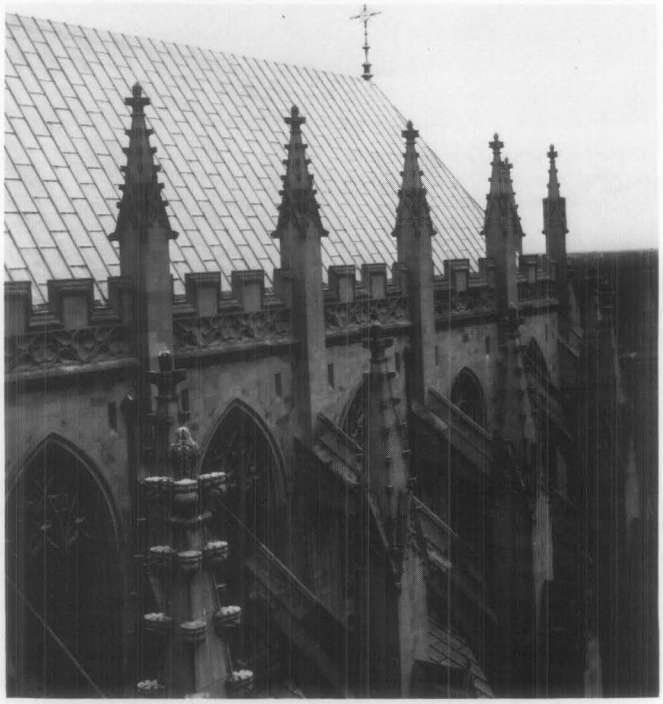

Good design and quality materials for the roof surface, fastenings, and flashing minimize roofing failures. This is essential on roofs such as on the National Cathedral where a thorough maintenance inspection and minor repairs cannot be done easily without special scaffolding. However, the success of the roof on any structure depends on frequent cleaning and repair of the gutter system. (Washington, D.C., photo courtesy of John Burns, A.I.A.)

Early craftsmen worked with a great deal of common sense; they understood their materials. For example they knew that wood shingles should be relatively narrow; shingles much wider than about 6" would split when walked on, or they may curl or crack from varying temperature and moisture. It is important to understand these aspects of craftsmanship, remembering that people wanted their roofs to be weather-tight and to last a long time. The recent use of "mother-goose" shingles on historic structures is a gross underestimation of the early craftsman's skills.

Supervision: Finding a modern craftsman to reproduce historic details may take some effort. It may even involve some special instruction to raise his understanding of certain historic craft practices. At the same time, it may be pointless (and expensive) to follow historic craft practices in any construction that will not be visible on the finished product. But if the roofing details are readily visible, their appearance should be based on architectural evidence or on historic prototypes. For instance, the spacing of the seams on a standing-seam metal roof will affect the building's overall scale and should therefore match the original dimensions of the seams.

Many older roofing practices are no longer performed because of modern improvements. Research and review of specific detailing in the roof with the contractor before beginning the project is highly recommended. For example, one early craft practice was to finish the ridge of a wood shingle roof with a roof "comb"—that is, the top course of one slope of the roof was extended uniformly beyond the peak to shield the ridge, and to provide some weather protection for the raw horizontal edges of the shingles on the other slope. If the "comb" is known to have been the correct detail, it should be used. Though this method leaves the top course vulnerable to the weather, a disguised strip of flashing will strengthen this weak point.

Detail drawings or a sample mock-up will help ensure that the contractor or craftsman understands the scope and special requirements of the project. It should never be assumed that the modern carpenter, slater, sheet metal worker, or roofer will know all the historic details. Supervision is as important as any other stage of the process.

Special problems inherent in the design of an elaborate historic roof can be controlled through the use of good materials and regular maintenance. The shape and detailing are essential elements of the building's historic character, and should not be modified, despite the use of alternative surface materials. (Gamwell House, Bellingham, Washington)

Alternative Materials

The use of the historic roofing material on a structure may be restricted by building codes or by the availability of the materials, in which case an appropriate alternative will have to be found.

Some municipal building codes allow variances for roofing materials in historic districts. In other instances, individual variances may be obtained. Most modern heating and cooking is fueled by gas, electricity, or oil—none of which emit the hot embers that historically have been the cause of roof fires. Where wood burning fireplaces or stoves are used, spark arrestor screens at the top of the chimneys help to prevent flaming material from escaping, thus reducing the number of fires that start at the roof. In most states, insurance rates have been equalized to reflect revised considerations for the risks involved with various roofing materials.

In a rehabilitation project, there may be valid reasons for replacing the roof with a material other than the original. The historic roofing may no longer be available, or the cost of obtaining specially fabricated materials may be prohibitive. But the decision to use an alternative material should be weighed carefully against the primary concern to keep the historic character of the building. If the roof is flat and is not visible from any elevation of the building, and if there are advantages to substituting a modern built-up composition roof for what might have been a flat metal roof, then it may make better economic and construction sense to use a modern roofing method. But if the roof is readily visible, the alternative material should match as closely as possible the scale, texture, and coloration of the historic roofing material.

Asphalt shingles or ceramic tiles are common substitute materials intended to duplicate the appearance of wood shingles, slates, or tiles. Fire-retardant, treated wood shingles are currently available. The treated wood tends, however, to be brittle, and may require extra care (and expense) to install. In some instances, shingles laid with an interlay of fire-retardent building paper may be an acceptable alternative.

Lead-coated copper, terne-coated steel, and aluminum/zinc-coated steel can successfully replace tin, terne plate, zinc, or lead. Copper-coated steel is a less expensive (and less durable) substitute for sheet copper.

The search for alternative roofing materials is not new. As early as the 18th century, fear of fire cause many wood shingle or board roofs to be replaced by sheet metal or clay tile. Some historic roofs were failures from the start, based on over-ambitious and naive use of materials as they were first developed. Research on a structure may reveal that an inadequately designed or a highly combustible roof was replaced early in its history, and therefore restoration of a later roof material would have a valid precedent. In some cities, the substitution of sheet metal on early row houses occurred as soon as the rolled material became available.

Cost and ease of maintenance may dictate the substitution of a material wholly different in appearance from the original. The practical problems (wind, weather, and roof pitch) should be weighed against the historical consideration of scale, texture, and color. Sometimes the effect of the alternative material will be minimal. But on roofs with a high degree of visibility and patterning or texture, the substitution may seriously alter the architectural character of the building.

Temporary Stabilization

It may be necessary to carry out an immediate and temporary stabilization to prevent further deterioration until research can determine how the roof should be restored or rehabilitated, or until funding can be provided to do a proper job. A simple covering of exterior plywood or roll roofing might provide adequate protection, but any temporary covering should be applied with caution. One should be careful not to overload the roof structure, or to damage or destroy historic evidence or fabric that might be incorporated into a new roof at a later date. In this sense, repairs with caulking or bituminous patching compounds should be recognized as potentially harmful, since they are difficult to remove, and at their best, are very temporary.

Precautions

The architect or contractor should warn the owner of any precautions to be taken against the specific hazards in installing the roofing material. Soldering of sheet metals, for instance, can be a fire hazard, either from the open flame or from overheating and undected smoldering of the wooden substrate materials.

Thought should be given to the design and placement of any modern roof appurtenances such as plumbing stacks, air vents, or TV antennas. Consideration should begin with the placement of modern plumbing on the interior of the building, otherwise a series of vent stacks may pierce the roof membrane at various spots creating maintenance problems as well as aesthetic ones. Air handling units placed in the attic space will require vents which, in turn, require sensitive design. Incorporating these in unused chimneys has been very successful

in the past.

Whenever gutters and downspouts are needed that were not on the building historically, the additions should be made as unobtrusively as possible, perhaps by painting them out with a color compatible with the nearby wall or trim.

Maintenance

Although a new roof can be an object of beauty, it will not be protective for long without proper maintenance. At least twice a year, the roof should be inspected against a checklist. All changes should be recorded and reported. Guidelines should be established for any foot traffic that may be required for the maintenance of the roof. Many roofing materials should not be walked on at all. For some—slate, asbestos, and clay tile—a self-supporting ladder might be hung over the ridge of the roof, or planks might be spanned across the roof surface. Such items should be specifically designed and kept in a storage space accessible to the roof. If exterior work ever requires hanging scaffolding, use caution to insure that the anchors do not penetrate, break, or wear the roofing surface, gutters, or flashing.

Any roofing system should be recognized as a membrane that is designed to be self-sustaining, but that can be easily damaged by intrusions such as pedestrian traffic or fallen tree branches. Certain items should be checked at specific times. For example, gutters tend to accumulate leaves and debris during the spring and fall and after heavy rain. Hidden gutter screening both at downspouts and over the full length of the gutter could help keep them clean. The surface material would require checking after a storm as well. Periodic checking of the underside of the roof from the attic after a storm or winter freezing may give early warning of any leaks. Generally, damage from water or ice is less likely on a roof that has good flashing on the outside and is well ventilated and insulated on the inside. Specific instructions for the maintenance of the different roof materials should be available from the architect or contractor.

Summary

The essential ingredients for replacing and maintaining a historic roof are:

- Understanding the historic character of the building and being sympathetic to it.
- Careful examination and recording of the existing roof and any evidence of earlier roofs.
- Consideration of the historic craftsmanship and detailing and implementing them in the renewal wherever visible.
- Supervision of the roofers or maintenance personnel to assure preservation of historic fabric and proper understanding of the scope and detailing of the project.
- Consideration of alternative materials where the original cannot be used.
- Cyclical maintenance program to assure that the staff understands how to take care of the roof and of the particular trouble spots to safeguard.

With these points in mind, it will be possible to preserve the architectural character and maintain the physical integrity of the roofing on a historic building.

This Preservation Brief was written by Sarah M. Sweetser, Architectural Historian, Technical Preservation Services Division. Much of the technical information was based upon an unpublished report prepared under contract for this office by John G. and Diana S. Waite. Some of the historical information was from Charles E. Peterson, FAIA, "American Notes," *Journal of the Society of Architectural Historians.*

The illustrations for this brief not specifically credited are from the files of the Technical Preservation Services Division.

This publication was prepared pursuant to Executive Order 11593, "Protection and Enhancement of the Cultural Environment," which directs the Secretary of the Interior to "develop and make available to Federal agencies and State and local governments information concerning professional methods and techniques for preserving, improving, restoring and maintaining historic properties." The Brief has been developed under the technical editorship of Lee H. Nelson, AIA, Chief, Preservation Assistance Division, National Park Service, U.S. Department of the Interior, Washington, D.C. 20240. Comments on the usefulness of this information are welcome and can be sent to Mr. Nelson at the above address. This publication is not copyrighted and can be reproduced without penalty. Normal procedures for credit to the author and the National Park Service are appreciated. **February 1978.**

Decorative features such as cupolas require extra maintenance. The flashing is carefully detailed to promote run-off, and the wooden ribbing must be kept well-painted. This roof surface, which was originally tin plate, has been replaced with lead-coated copper for maintenance purposes. (Lyndhurst, Tarrytown, New York, photo courtesy of the National Trust for Historic Preservation)

Additional readings on the subject of roofing are listed below.

Boaz, Joseph N., ed. *Architectural Graphic Standards.* New York: John Wiley and Sons, Inc., 1970. (Modern roofing types and detailing)

Briggs, Martin S. *A Short History of the Building Crafts.* London: Oxford University Press, 1925. (Descriptions of historic roofing materials)

Bulletin of the Association for Preservation Technology. Vol. 2 (nos. 1–2) 1970. (Entirely on roofing)

Holstrom, Ingmar; and Sandstrom, Christina. *Maintenance of Old Buildings: Preservation from the Technical and Antiquarian Standpoint.* Stockholm: National Swedish Building Research, 1972. (Contains a section on roof maintenance problems)

Insall, Donald. *The Care of Old Buildings Today.* London: The Architectural Press, 1972. (Excellent guide to some problems and solutions for historic roofs)

Labine, R.A. Clem. "Repairing Slate Roofs." *The Old House Journal* 3 (no. 12, Dec. 1975): 6–7.

Lefer, Henry. "A Birds-eye View." *Progressive Architecture.* (Mar. 1977), pp. 88–92. (Article on contemporary sheet metal)

National Slate Association. *Slate Roofs.* Reprint of 1926 edition, now available from the Vermont Structural Slate Co., Inc., Fairhaven, VT 05743. (An excellent reference for the many designs and details of slate roofs)

Peterson, Charles E. "Iron in Early American Roofs." *The Smithsonian Journal of History* 3 (no. 3). Edited by Peter C. Welsh. Washington, D.C.: Smithsonian Institution, 1968, pp. 41–76.

Waite, Diana S. *Nineteenth Century Tin Roofing and its Use at Hyde Hall.* Albany: New York State Historic Trust, 1971.

——. "Roofing for Early America." *Building Early America.* Edited by Charles E. Peterson. Radnor, Penn.: Chilton Book Co., 1976.

VICTORIAN AND CLASSIC SHINGLES

BY BERRIDGE MANUFACTURING

Acceptable Replacement for Metal Shingles

http://www.berridge.com/products/berridge-metal-shingles/berridge-victorian-classic-metal-shingles/

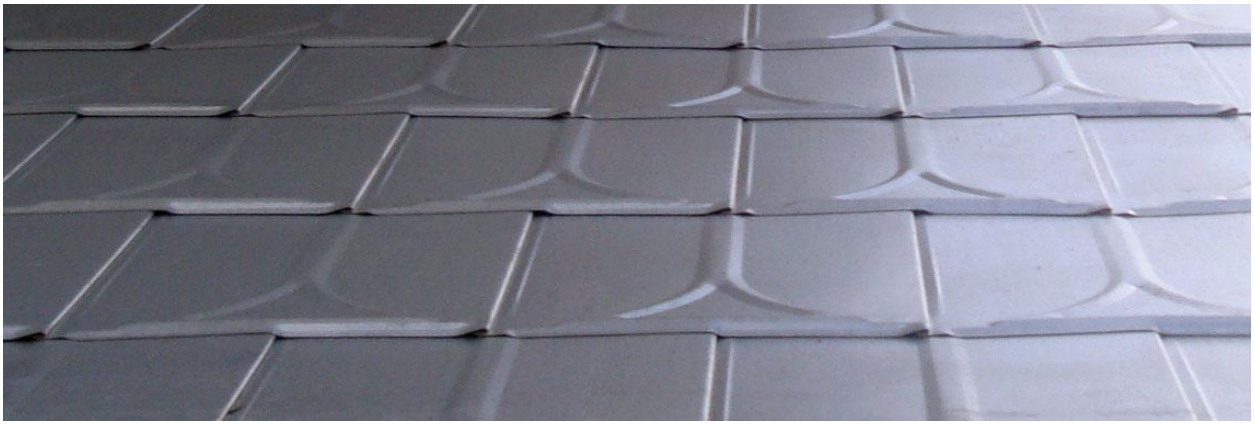

QUICK FACTS			
ArcelorMittal GalvalumeTM is a coated steel product that has proven its superior performance as a building material in extended field testing in a diverse range of corrosive environments. Its unique combination of durability, edge protection, and resistance to corrosion is at least twice that of galvanized steel.	Individual Shingle System 9" X 12" 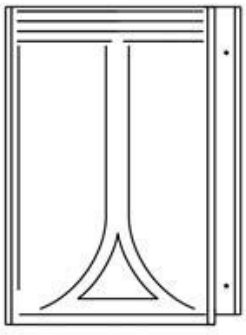 *Berridge Victorian Shingle*	9" X 12" 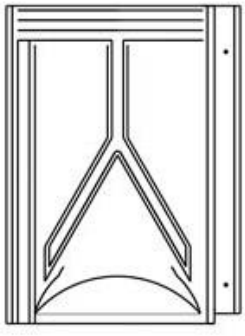 *Berridge Classic Shingle*	All colors applied by Berridge are premium fluoropolymer coatings produced with full strength Kynar 500® or Hylar 5000™ resin Energy Star Approved

COLOR CHOICES

STANDARD COLORS

Due to limitations in the printing process, please request actual color chips for accurate color viewing.

BUCKSKIN | PARCHMENT | ALMOND

AGED BRONZE | SHASTA WHITE | FOREST GREEN | PATINA GREEN | SIERRA TAN

MEDIUM BRONZE | CHARCOAL GREY | HEMLOCK GREEN | BRISTOL BLUE | TERRA-COTTA

DARK BRONZE | ZINC GREY | HARTFORD GREEN | ROYAL BLUE | COLONIAL RED

COPPER BROWN | MATTE BLACK | TEAL GREEN | BURGUNDY | DEEP RED

PREMIUM COLORS

Berridge premium colors require a nominal surcharge.

NATURAL WHITE | AWARD BLUE

METALLIC COLORS

Berridge metallic colors are premium finishes which require a nominal surcharge.
Due to limitations in the printing process, please request actual color chips for accurate color viewing.

CHAMPAGNE | COPPER-COTE™ | ANTIQUE COPPER-COTE

NATURAL METAL FINISH

Berridge Acrylic-Coated Galvalume® is a coated sheet product that combines the corrosion resistance of GALVALUME® steel sheet with a clear, organic resin applied to the top side and bottom side of GALVALUME® substrate.

ACRYLIC-COATED GALVALUME®

ZINC-COTE™ | LEAD-COTE™ | PREWEATHERED GALVALUME®

All colors except Award Blue comply with LEED® v3 & Energy Star requirements for roof slopes greater than 2:12.
Almond complies with LEED® v3 requirements for low slopes.
Natural White complies with LEED® v3 & Energy Star requirements for low slopes.

Berridge Victorian & Classic Shingles

Prefinished or Natural Metal Finish shingles for historical restorations, residential and commercial applications over solid sheathing.

- **Available in 24 gauge steel**
- **Traditional appearance**
- **May be used for roof & wall applications**
- **Concealed fasteners**
- **Florida Product Approval**
- **Miami-Dade Approved**

Victorian Shingles
9” x 12” Coverage

Classic Shingles
9” x 12” Coverage

SPECIFICATIONS

(Complete specifications available at www.berridge.com)

PRODUCT:
Furnish and install Berridge Victorian or Classic Shingles as manufactured by Berridge Manufacturing Company, San Antonio, Texas.

MANUFACTURE:
Each shingle to have a stamped design with 9” x 12” coverage.

MATERIALS AND FINISH
Reference web site: www.berridge.com

CONSTRUCTION DETAILS
Reference web site: www.berridge.com

Berridge Manufacturing Company
6515 Fratt Road
San Antonio, Texas 78218
(800) 669-0009 • **www.berridge.com**

Roofs of Distinction

MIAMI-DADE COUNTY
DEPARTMENT OF REGULATORY AND ECONOMIC RESOURCES (RER)
BOARD AND CODE ADMINISTRATION DIVISION

MIAMI-DADE COUNTY
PRODUCT CONTROL SECTION
11805 SW 26 Street, Room 208
Miami, Florida 33175-2474
T (786) 315-2590 F (786) 315-2599
www.miamidade.gov/economy

NOTICE OF ACCEPTANCE (NOA)

Berridge Manufacturing Company
1720 Maury
Houston, TX. 77026

SCOPE:

This NOA is being issued under the applicable rules and regulations governing the use of construction materials. The documentation submitted has been reviewed and accepted by Miami-Dade County RER - Product Control Section to be used in Miami Dade County and other areas where allowed by the Authority Having Jurisdiction (AHJ).

This NOA shall not be valid after the expiration date stated below. The Miami-Dade County Product Control Section (In Miami Dade County) and/or the AHJ (in areas other than Miami Dade County) reserve the right to have this product or material tested for quality assurance purposes. If this product or material fails to perform in the accepted manner, the manufacturer will incur the expense of such testing and the AHJ may immediately revoke, modify, or suspend the use of such product or material within their jurisdiction. RER reserves the right to revoke this acceptance, if it is determined by Miami-Dade County Product Control Section that this product or material fails to meet the requirements of the applicable building code.
This product is approved as described herein, and has been designed to comply with the Florida Building Code including the High Velocity Hurricane Zone of the Florida Building Code.

DESCRIPTION: Victorian Classic Shingle

LABELING: Each unit shall bear a permanent label with the manufacturer's name or logo, city, state and following statement: "Miami-Dade County Product Control Approved", unless otherwise noted herein.

RENEWAL of this NOA shall be considered after a renewal application has been filed and there has been no change in the applicable building code negatively affecting the performance of this product.

TERMINATION of this NOA will occur after the expiration date or if there has been a revision or change in the materials, use, and/or manufacture of the product or process. Misuse of this NOA as an endorsement of any product, for sales, advertising or any other purposes shall automatically terminate this NOA. Failure to comply with any section of this NOA shall be cause for termination and removal of NOA.

ADVERTISEMENT: The NOA number preceded by the words Miami-Dade County, Florida, and followed by the expiration date may be displayed in advertising literature. If any portion of the NOA is displayed, then it shall be done in its entirety.

INSPECTION: A copy of this entire NOA shall be provided to the user by the manufacturer or its distributors and shall be available for inspection at the job site at the request of the Building Official.

This revises NOA# 12-0906.08 and consists of pages 1 through 7.
The submitted documentation was reviewed by Alex Tigera.

MIAMI-DADE COUNTY APPROVED

ROOFING ASSEMBLY APPROVAL:

Category:	Roofing
Sub-Category:	Non-Structural Metal Roofing
Material:	Steel
Deck Type:	Wood
Maximum Design Pressure	**-131 psf.**

TRADE NAMES OF PRODUCTS MANUFACTURED OR LABELED BY APPLICANT:

Product	Dimensions	Test Specifications	Product Description
Berridge Victorian/Classic Shingle	l = 13-7/8" w = 11" Thickness = 24 ga. Min. Yield Strength: 59.4 ksi.	TAS 125	G-90 galvanized or galvalume shingles coated with various approved coatings, Fluroceram.

MANUFACTURING LOCATIONS:

1. Houston, TX.
2. San Antonio, TX.
3. Seguin, TX.

EVIDENCE SUBMITTED:

Test Agency	Test Identifier	Test Name/Report	Date
Force Engineering & Testing, Inc.	49-0242T-12A, B	TAS 125	12/04/12
BASF	Lab Test Certification	ASTM B-117 ASTM G-23	06/05/06
Hurricane Test Laboratories, Inc.	0307-0127-04	TAS 125	03/09/04
Q.C. Metallurgical Laboratory, Inc.	1238-01	ASTM E8	09/06/07
PRI Asphalt Technologies, Inc.	BMC-004-02-01	TAS 100	04/04/07

APPROVED ASSEMBLIES:

System A-1:	Victorian/Classic Shingle
Deck Type:	Wood, Non-Insulated
Deck Description:	New Construction or Re-Roof $^{15}/_{32}$" or greater plywood or wood plank.
Slope Range:	3": 12" or greater
Maximum Uplift Pressure:	**See Table A Below (See Limitation #2)**

Deck Attachment: In accordance with applicable Building Code, but in no case shall it be less than 8d annular ring shank nails spaced at a distance listed below in **Table A**. In reroofing, where the deck is less than $^{19}/_{32}$" thick (Minimum $^{15}/_{32}$"). The above attachment method must be in addition to existing attachment.

Underlayment: Minimum underlayment shall be an ASTM D 226 Type II installed with a minimum 4" side-laps and 6" end-laps. Underlayment shall be fastened with corrosion resistant tin-caps and 1¼" annular ring-shank nails, spaced 6" o.c. at all laps and two staggered rows 12" o.c. in the field of the roll. Or, any Miami-Dade County Product Control Approved underlayment having a current NOA.

Fire Barrier Board: Any approved fire barrier having a current NOA. Refer to a current fire directory listing for fire ratings of this roofing system assembly as well as the location of the fire barrier within the assembly. See Limitation # 1.

Valleys: Valley construction shall be in compliance with Roofing Application Standard RAS 133 and with Berridge Manufacturing Company's current published installation instructions.

Metal Panels and Accessories: Install the "Victorian/Classic Shingle" including flashing penetrations, valleys, end laps and accessories in compliance "Berridge Manufacturing's" current, published installation instructions and in compliance with the minimum requirements detailed in Roofing Application Standard RAS 133.

Berridge Victorian/Classic Shingle shall be attached to the plywood substrate with a minimum of two corrosion resistant fasteners of sufficient length to penetrate through the sheathing a minimum of $^{3}/_{16}$", listed in **Table A**. Fasteners shall be placed in accordance with the detail outlined in **Table A** and fastener detail herein as follows:

Shingle shall be fastened with a minimum of two screws located in the detail outlined in **Table A**. The male end of the next shingle is tucked in the female end of the previous shingle to form a lock. The shingles shall be placed in a staggered pattern.

TABLE A
MAXIMUM DESIGN PRESSURES

	Field	Perimeter and Corner[1]	Perimeter and Corner[1]
Plywood Thickness (minimum)	15/32"	15/32"	19/32"
Plywood Fastener Spacing	6" o.c.	6" o.c.	3" o.c.
Fasteners	#12 panhead	#10-9	#10-9
Shingle Fastener Placement	Detail B	Detail C	Detail C
Maximum Design Pressure	**-118.5 psf**	**-123.5 psf**	**-131 psf**

1. Extrapolation shall not be allowed

PROFILE DRAWING

DETAIL A

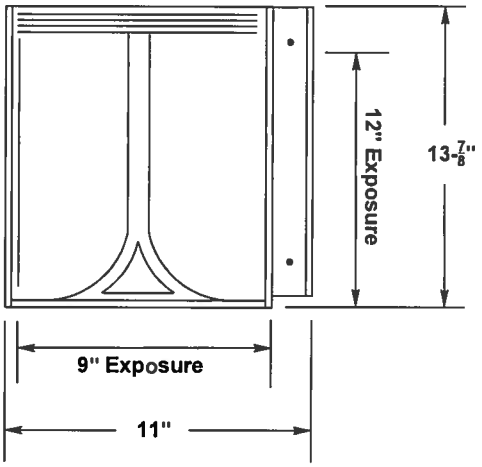

VICTORIAN SHINGLE

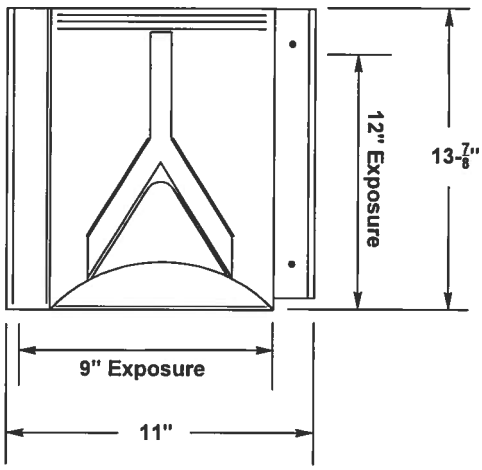

CLASSIC SHINGLE

OXFORD SHINGLE

BY CLASSIC METAL ROOFING SYSTEMS

Acceptable Replacement for Metal Shingle

https://www.classicmetalroofingsystems.com/product-info/styles/oxford-shingle/

QUICK FACTS			
LOOK	STRENGTH	DURABILITY	GOING GREEN
Available in a variety of Kynar 500 and Hylar 5000 colors Concealed fasteners for ultimate protection Maintenance free: will not rust, crack, or rot Resists streaking and staining Works well for even harsh coastal applications	Manufactured from heavy .024" thick 95% recycled content aluminum alloy Has passed wind tests required by Dade County, Florida. Will not burn and protects against flying embers from wildfires or chimneys Four-way interlocking panels hold tight	Sheds ice and snow faster than many other roofs Will not absorb water or become waterlogged Will not rot or support insects Fade and chalk resistant Lifetime Limited Warranty	Energy Star Partner Sustainable "Cool Coatings" reflect radiant heat Made from 95% post-consumer recycled aluminum Can usually be installed over existing roofs; allows you to invest in a better roof rather than landfill disposal of your old one

COLOR CHOICES

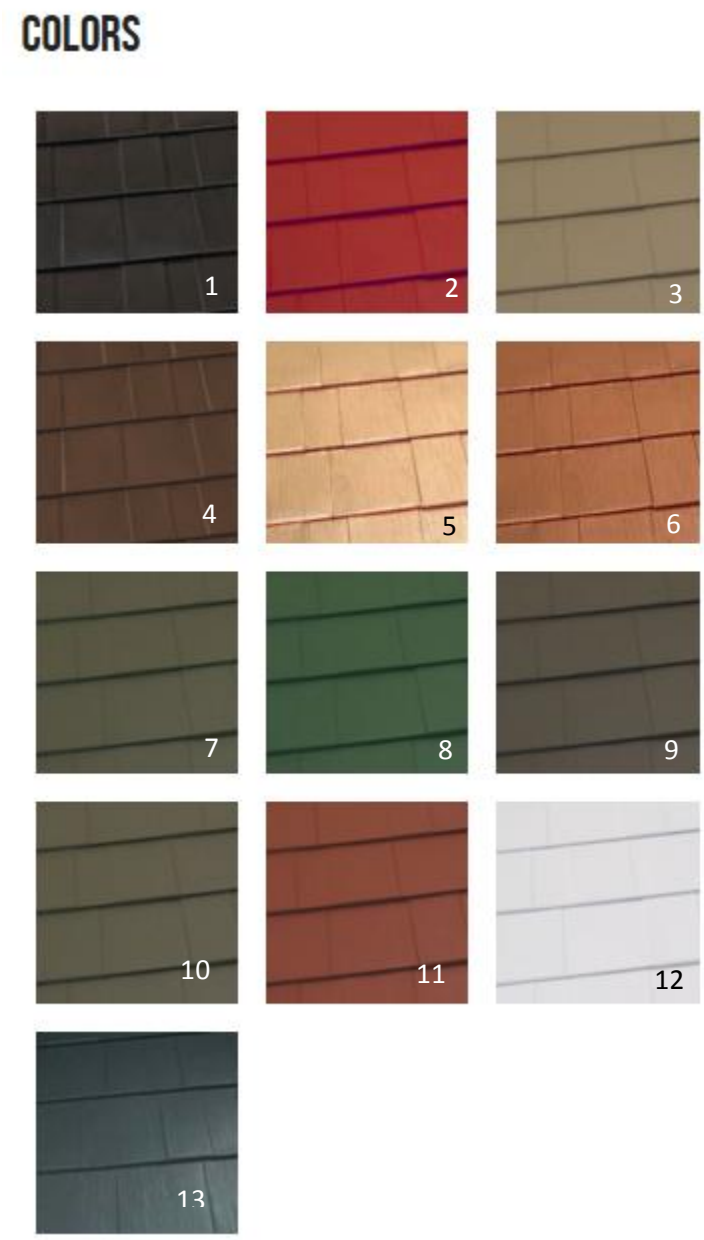

1. Black
2. Brite Red
3. Buckskin
4. Caramel
5. Solid Copper
6. Copper Penny
7. Deep Charcoal
8. Forest Green
9. Mustang Brown
10. Shake Grey*
11. Terra Red
12. White
13. Vermont Slate

*Shake Grey is the acceptable color replacement for metal shingle

SPECIFICATIONS AND NOA

Oxford Shingle is an attractive aluminum roofing system designed to provide a beautiful, long-lasting, durable, and energy efficient alternative to traditional roofing materials like standard shingles and slate. The large interlocking panels minimize seams on the roof and feature all concealed fasteners.

Pre-Formed Flashings and Accessories:

- Hip / Ridge caps
- Self-cleaning valley
- Combination starter strip / drip edge
- Gable edge trim
- Sidewall flashing
- Vent pipe flashing
- Matching coil stock
- Color-matched butyl sealant
- Roof AquaGuard underlayments
- Aluminum screwshank nails
- Unique fastening clips
- Optional snow guards
- Available foam inserts for high traffic areas

Panel measurements: 60" x 12", 20 panels per 100 square feet;

Weight: 40 pounds per square
Oxford Shingles have a four-way interlock that locks each panel to the surrounding panels. The panels are secured to the roof using aluminum fastening clips. The clips, are attached to the panels' top locks, allow the panels to expand and contract as necessary. The product's low weight allows installation over many existing roofs.

Aluminum: .024" thick roofing panels; *Matching accessories are .019" or .024" thick aluminum*
All aluminum panels and accessories are made of 3105-H25 aluminum sheet (minimum tensile strength 26,000 psi; minimum yield strength 22,000 psi) or equivalent. The aluminum has minimum 95% recycled content.

Minimum Roof Pitch:< 3:12

Finish: Kynar 500 or Hylar 5000

Oxford Shingle is coated with a baked on protective primer and a Kynar 500 or Hylar 5000 top coat to provide a high quality finish. Kynar 500 and Hylar 5000 are trade names for polyvinylidene fluoride resin. The backs of the panels are finished with a protective clear coat. The finish includes reflective pigment to enhance the product's energy efficiency.

OXFORD SHINGLE

BEAUTIFUL. DURABLE. FOR LIFE.

OUR COMMITMENT TO GREEN

Classic Metal Roofing Systems is deeply committed to the stewardship of our natural resources and the environment.

• **We reuse and recycle** – Oxford Shingle is made from 95% post-consumer recycled aluminum. It is 100% recyclable.

• **We are energy-efficient** – Oxford Shingle's technologically advanced Kynar 500® or Hylar 5000® coatings – featuring Classic's Exclusive hI-R® Heat Barrier technology – help reduce energy costs by up to 25% and reduce attic heat gain by up to 34%.

• **We save for the future** – Oxford Shingle can, in most cases, be installed over existing roofing materials, saving the earth from being filled with used temporary roofing.

Ask about available cool roofing tax credits and utility incentives in your area.
Call us at 800-543-8938.

WHAT DOES MCA CERTIFICATION MEAN?

The Metal Construction Association (MCA) Certified Metal Roofing Program was developed as a way to recognize metal roofing manufacturers who adhere to exacting quality control procedures, as well as products which utilize metals and coatings that meet high performance standards.

Classic Metal Roofing Systems is one of five metal roofing manufacturers from around the world manufacturing "Premium" products under the MCA program.

Because of the stringent requirements of the MCA Certified Metal Roofing Program, homeowners who choose Oxford Shingle can be assured they are purchasing a product of the highest quality which utilizes only "first quality" raw materials and does not include lower quality raw materials purchased in the "secondary" or "distressed" market. Using Oxford Shingle ensures long term satisfaction.

ENERGY STAR PARTNER

INVESTMENT GRADE MRA ROOFING

METAL CONSTRUCTION ASSOCIATION CERTIFIED ROOFING PANELS

made in USA

Proudly Manufactured in the USA.

Kynar 500® is a registered trademark of Arkema, Inc.
Hylar 5000® is a registered trademark of Solvay Solexis, Inc.

CLASSIC METAL ROOFING SYSTEMS
8510 Industry Park Drive | Piqua, OH 45356

Phone: 800-543-8938
Fax: 937-778-5116

www.classicroof.com
info@classicroof.com

It causes neighbors to stop and take a closer look. It protects your home with unparalleled strength. It understands that a cleaner planet isn't just wishful thinking, it's a necessity. And it will be around for generations. Beautiful. Durable. And definitely for life.

OXFORD SHINGLE

VISUALLY CAPTIVATING. AGGRESSIVELY PROTECTIVE. PASSIONATELY DESIGNED.

Oxford Shingle is in a class by itself. It gives your home the beauty, durability, energy efficiency, and innovative design that no other roofing material can live up to. Oxford Shingle is designed for peak performance using only first quality aluminum, 21st century coatings, and passionate design to protect and enhance the beauty of your home.

A LIFETIME OF INSPIRATION.

There's not much left in the world that can boast a lifetime of beauty, strength, and energy efficiency like Oxford Shingle. Classic's investment-grade aluminum is combined with advanced paint systems and our exclusive hI-R® Heat Barrier Coating to reduce your home's carbon footprint. Homeowners can save up to 25% on their energy bills with Oxford Shingle. A Classic roof works hard so your climate control system works easier. In the end, your home uses less energy which keeps your costs down and reduces the strain on our nation's energy consumption.

At Classic Metal Roofing Systems, we place our 30+ years of experience, innovation, and commitment behind every roof we make. We believe in the quality of materials and design so much that we back every shingle with our Lifetime/40 Year Transferable Limited Warranty. Simply put, Oxford Shingle will protect your home for as long as you own it and new homeowners for up to 40 years from the point of installation.

THE BLENDING OF STYLE AND SUBSTANCE.

- Lifetime/40 Year Transferable Limited Warranty
- Classic's exclusive hI-R® Heat Barrier Coating reflects radiant heat and reduces energy costs by up to 25%
- Made from 95% post-consumer recycled content
- Produced from rustproof aluminum
- Wide range of colors to complement your home
- Low weight for easy installation over existing roofs
- Kynar 500® or Hylar 5000® coatings protect against peeling, chalking, cracking, and fading
- Resists water, rot, and insects
- Fully recyclable and environmentally friendly
- Adds value to your home

BEAUTIFUL. DURABLE. FOR LIFE.

Color. To create. To revive. To make it truly your own.

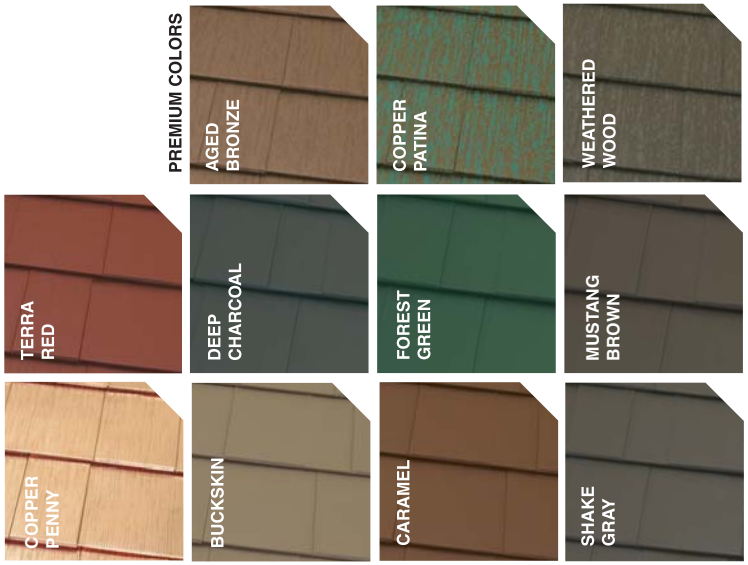

**Brite Red, Black, White, and Solid Copper also available. Actual color may differ. Ask your Independent Classic Dealer for true color samples.*

CLASSIC METAL ROOFING SYSTEMS
www.classicroof.com

PROFILE DRAWING

OXFORD SHINGLE

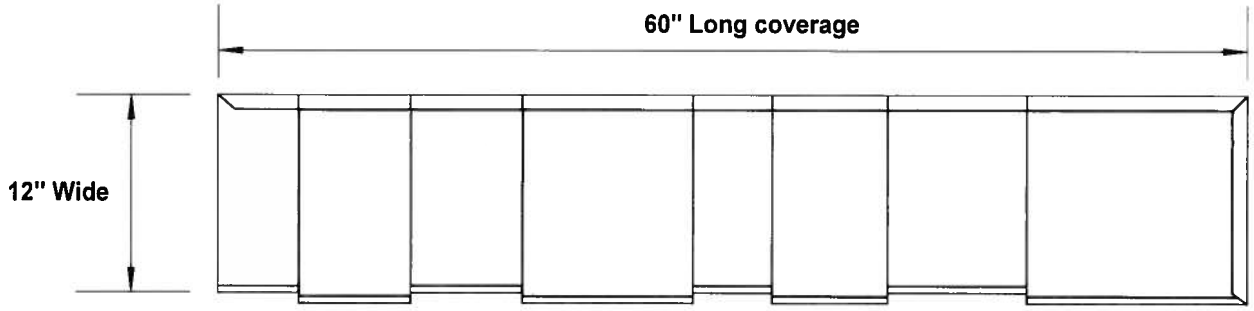

CONTINUOUS CLIP

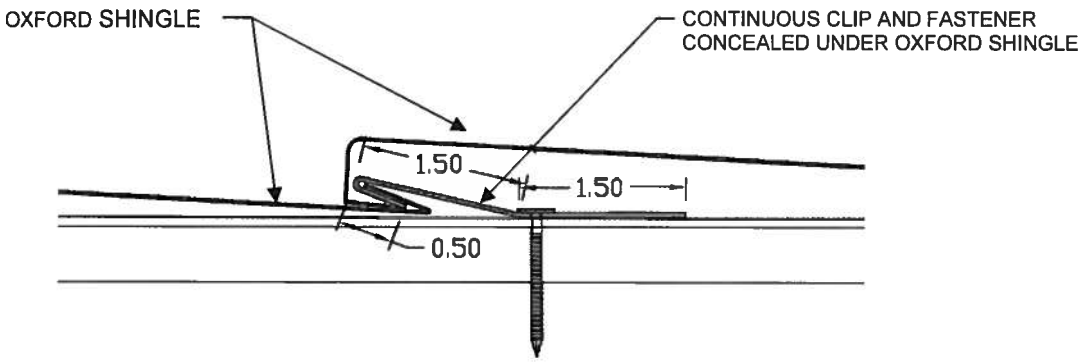

END OF THIS ACCEPTANCE

MetalWorks® StoneCrest® Tile Steel Shingles

BY TAMKO BUILDING PRODUCTS

Acceptable Replacement for Metal Shingles

http://www.tamko.com/ResidentialRoofing/SteelShingles/MetalWorksStonecrestTile

QUICK FACTS			
G-90 steel construction Special coating process resists dirt and environmental aging. Coating system with Kynar 500®/Hylar 5000®	Four-way locking system for enhanced performance Lightweight compared to traditional roofing products	100% recyclable and made from 37% to 89% recycled content Energy Star Qualified	Custom color matching For a color requirement that does not appear in Standard Colors, please contact TAMKO® to inquire about our Special Color Program

METALWORKS
STEEL SHINGLES TAMKO

The Many Beautiful Faces of Metal.

Offering the classic looks of slate, tile and wood for commercial and residential roofs.

MetalWorks Steel Shingles

MetalWorks® Steel Shingles pair the latest looks with trusted G-90 steel. And whether it's the sleek look of tile, the dramatic look of wood or the classic look of slate, MetalWorks products provide the right shingle for any taste. The shingles are available in a full array of colors, all of which are ENERGY STAR® qualified.

A beautiful choice for a wide range of residential and commercial applications.

Features & Benefits

G-90 Steel Construction
Recognized as the industry standard

KYNAR 500®/HYLAR 5000® Finish
A hardy, resin-based coating

Can Be Used for Reroofing Applications
Install over up to two layers of asphalt shingles*

Environmentally Conscious
100% recyclable

50-year Limited Warranty†
Shingles begin to age as soon as they are exposed to nature, and buildings experience aging factors differently. Because it's difficult to predict how long shingles will last, TAMKO offers a 50-year Limited Warranty on MetalWorks shingles.

▪ 25-year Full Start Period ▪
▪ 30-year Finish Limited Warranty ▪
▪ 50-year Limited Warranty Coverage for Winds up to 110 mph ▪

Four-way Locking System
Utilized for effective installation

Energy Star® Qualified

*Check your local building code.
† To obtain a copy of TAMKO's Limited Warranty, visit us online at tamko.com or call us at 1-800-641-4691.

StoneCrest® Slate Steel Shingles

Create a dramatic look that closely replicates the random finish of natural slate. The double-stamped manufacturing process creates stunning beauty.

StoneCrest Slate
Vermont Blue

StoneCrest® Tile Steel Shingles

Create the distinctive look of smooth, uniform tile. For those who appreciate a contemporary and refined appearance.

StoneCrest Tile
Quaker Green

AstonWood® Steel Shingles

Combine the warmth and appeal of cedar shingles with galvanized steel to produce a roofing product that emulates the rich, deep, hand-hewn texture of wood.

AstonWood
Timber Brown

Colors

SS = StoneCrest Slate AW = AstonWood ST = StoneCrest Tile

Custom Colors

For a color requirement that does not appear in Standard Colors, please contact TAMKO to inquire about our Special Color Program.

SEQUOIA RED • SS • AW •	VERMONT BLUE • SS • AW • ST •	TIMBER BROWN • AW •
FOREST GREEN • AW •	SIERRA SLATE GREY • SS • AW • ST •	RIVER ROCK BROWN • SS • AW •
BRITE RED • AW •	QUAKER GREEN • SS • ST •	CANYON COPPER BRONZE • AW •

NOTE: REPRODUCTION OF THESE COLORS IS AS ACCURATE AS OUR PRINTING WILL PERMIT. TAMKO® RECOMMENDS VIEWING AN ACTUAL ROOF INSTALLATION PRIOR TO FINAL COLOR SELECTION FOR THE FULL IMPACT OF COLOR BLENDING AND PATTERNS.

TW Metal & Tile Underlayment

Used for application under metal roofs, this 75 mil self-adhering underlayment features a fiberglass mat, rubberized asphalt, polymer film surfacing and a split treated release film. The underlayment is UL Classified as a Prepared Roofing Accessory and ICC-ES ESR-1252.

StoneCrest Slate
River Rock Brown

Striking Modern Appeal.
And ENERGY STAR® qualified.

StoneCrest Slate
Sierra Slate Grey

StoneCrest Slate
Sequoia Red

StoneCrest Slate
Quaker Green

StoneCrest Slate
Vermont Blue

METALWORKS® Steel shingles combine the classic and contemporary looks of slate, tile and wood with ENERGY STAR qualification.

All MetalWorks shingles are ENERGY STAR qualified and listed by the Cool Roof Rating Council (CRRC).

ENERGY STAR is a joint program of the U.S. Environmental Protection Agency and the U.S. Department of Energy. Consult your product manufacturer, roofing contractor or call 1-888-STAR-YES (1-888-782-7937) for more information. ENERGY STAR is only available in the United States.

The Cool Roof Rating Council (CRRC) is an independent nonprofit organization that lists a third-party rating system for the radiative properties of roof surfacing materials.

MetalWorks® Steel Shingles

AstonWood® Steel Shingle
30 pc. per carton/98.4 sq. ft. per carton

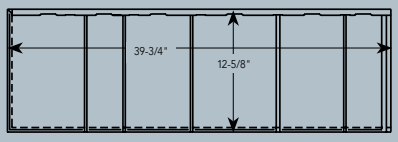

StoneCrest® Slate and StoneCrest® Tile Steel Shingles
15 pc. per carton/49.2 sq. ft. per carton

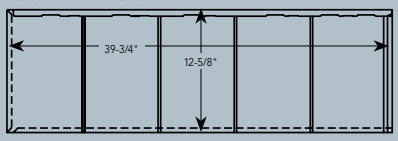

Metal Accessories

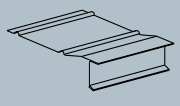
Starter/Eave Flashing
10 pc. per carton/10' length

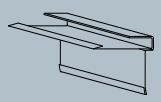
Gable/Rake Flashing
10 pc. per carton/10' length

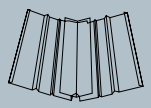
Valley
5 pc. per carton/10' length

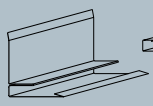
Sidewall Flashing
5 pc. per carton/10' length

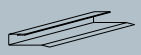
J-Channel
10 pc. per carton/
10' length

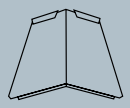
Hip Cap Tapered
StoneCrest or AstonWood
50 pc. per carton/1' length

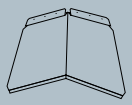
12" Ridge Cap
25 pc. per carton/
1' length

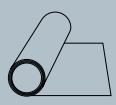
Trim Coil
22-1/4" x 50'

Clip
400 per carton/
100+/- per square

Snow Guard
100 pc. per carton

Colored Screws
0.5-lb. bag of 50 pc.

Non-Metal Accessories

Hip & Ridge Seal
4" x 50'

Touch-up Paint
2-oz. bottle

STONECREST SLATE

- Painted galvanized steel
- Minimum slope: 3" in 12"
- Shingle width—overall: 39-3/4"
- Shingle height—overall: 12-5/8"
- Shingle exposure: 12"
- Shingles per box: 15 panels
- Coverage per box: 49.2 sq. ft. (approx. 1/2 square)
- Shingle material: 28 gauge nominal 0.0162" (0.066802 cm) thickness, including G-90 galvanization and paint coatings. Exterior finish is fluoropolymer (PVDF) with anticorrosive primer, 1 mil dry film thickness. Interior finish is a wash coat with anticorrosive primer, 0.6 mil dry film thickness.
- Clip: 1-1/4" wide x 2-1/8" long x 0.20" deep
- Clip material: 0.015" thick, G-90 galvanized steel

ASTONWOOD

- Painted galvanized steel
- Minimum slope: 3" in 12"
- Shingle width—overall: 39-3/4"
- Shingle height—overall: 12-5/8"
- Shingle exposure: 12"
- Shingles per box: 30 panels
- Coverage per box: 98.4 sq. ft. (approx. 1 square)
- Shingle material: 30 gauge nominal 0.0135" (0.03429 cm) thickness, including G-90 galvanization and paint coatings. Exterior finish is fluoropolymer (PVDF) with anticorrosive primer, 1 mil dry film thickness. Interior finish is a wash coat with anticorrosive primer, 0.6 mil dry film thickness.
- Clip: 1-1/4" wide x 2-1/8" long x 0.20" deep
- Clip material: 0.015" thick, G-90 galvanized steel

STONECREST TILE

- Painted galvanized steel
- Minimum slope: 3" in 12"
- Shingle width—overall: 39-3/4"
- Shingle height—overall: 12-5/8"
- Shingle exposure: 12"
- Shingles per box: 15 panels
- Coverage per box: 49.2 sq. ft. (approx. 1/2 square)
- Shingle material: 28 gauge nominal 0.0162" (0.066802 cm) thickness, including G-90 galvanization and paint coatings. Exterior finish is fluoropolymer (PVDF) with anticorrosive primer, 1 mil dry film thickness. Interior finish is a wash coat with anticorrosive primer, 0.6 mil dry film thickness.
- Clip: 1-1/4" wide x 2-1/8" long x 0.20" deep
- Clip material: 0.015" thick, G-90 galvanized steel

Building Products for the Professional

Information included in this brochure was current at the time of printing. To obtain a copy of the most current version of this brochure or TAMKO's Limited Warranty, visit us online at tamko.com or call us at 1-800-641-4691.

Roofs featured on cover from left to right are AstonWood Timber Brown, StoneCrest Slate Sierra Slate Grey and StoneCrest Tile Vermont Blue.

©2015 TAMKO Building Products, Inc.
TAMKO, MetalWorks, StoneCrest and AstonWood are registered trademarks of TAMKO Building Products, Inc.
Kynar 500 is a registered trademark of Arkema, Inc.
Hylar 5000 is a registered trademark of Solvay Solexis, Inc.
ENERGY STAR is a registered trademark of the U.S. Environmental Protection Agency.

71949 0815

TAMKO® BUILDING PRODUCTS
P.O. Box 1404 • Joplin, MO 64802-1404
1-800-641-4691
tamko.com

40000480

Product Approval
USER: Public User

FL #	FL3901-R7
Application Type	Revision
Code Version	2014
Application Status	Approved
Comments	
Archived	☐
Product Manufacturer	TAMKO Building Products, Inc.
Address/Phone/Email	PO Box 1404 Joplin, MO 64802 (417) 624-6644 Ext 2305 kerri_eden@tamko.com
Authorized Signature	Kerri Eden kerri_eden@tamko.com
Technical Representative	Kerri Eden
Address/Phone/Email	PO Box 1404 Joplin, MO 64802 (417) 624-6644 Ext 2305 kerri_eden@tamko.com
Quality Assurance Representative	
Address/Phone/Email	
Category	Roofing
Subcategory	Metal Roofing
Compliance Method	Evaluation Report from a Florida Registered Architect or a Licensed Florida Professional Engineer ☐ Evaluation Report - Hardcopy Received
Florida Engineer or Architect Name who developed the Evaluation Report	Robert J.M. Nieminen
Florida License	PE-59166
Quality Assurance Entity	UL LLC
Quality Assurance Contract Expiration Date	01/29/2018
Validated By	John W. Knezevich, PE ☑ Validation Checklist - Hardcopy Received
Certificate of Independence	FL3901_R7_COI_2015_01_COI_Nieminen.pdf

Referenced Standard and Year (of Standard)

Standard	Year
UL 1897	2004

Equivalence of Product Standards Certified By

Sections from the Code

Product Approval Method	Method 1 Option D
Date Submitted	04/24/2015
Date Validated	04/27/2015
Date Pending FBC Approval	05/03/2015
Date Approved	06/23/2015

Summary of Products

FL #	Model, Number or Name	Description
3901.1	MetalWorks Steel Roofing Systems	Steel Roofing Shingles

Limits of Use
Approved for use in HVHZ: No
Approved for use outside HVHZ: Yes
Impact Resistant: N/A
Design Pressure: +N/A/-99.0
Other: 1.) The design pressure noted on this application relates to one particular assembly. Refer to ER Appendix for other systems and deck types. 2.) Refer to ER Section 5 for other limits of use.

Installation Instructions
FL3901_R7_II_2015_04_FINAL_A1_ER_TAMKO_METAL RFG_FL3901-R7.pdf
Verified By: Robert J. M. Nieminen PE - 59166
Created by Independent Third Party: Yes

Evaluation Reports
FL3901_R7_AE_2015_04_FINAL_ER_TAMKO_METAL RFG_FL3901-R7.pdf
Created by Independent Third Party: Yes

Back Next

Contact Us :: 1940 North Monroe Street, Tallahassee FL 32399 Phone: 850-487-1824

The State of Florida is an AA/EEO employer. Copyright 2007-2013 State of Florida. :: Privacy Statement :: Accessibility Statement :: Refund Statement

Under Florida law, email addresses are public records. If you do not want your e-mail address released in response to a public-records request, do not send electronic mail to this entity. Instead, contact the office by phone or by traditional mail. If you have any questions, please contact 850.487.1395. *Pursuant to Section 455.275(1), Florida Statutes, effective October 1, 2012, licensees licensed under Chapter 455, F.S. must provide the Department with an email address if they have one. The emails provided may be used for official communication with the licensee. However email addresses are public record. If you do not wish to supply a personal address, please provide the Department with an email address which can be made available to the public. To determine if you are a licensee under Chapter 455, F.S., please click here .

Product Approval Accepts:

securityMETRICS Credit Card SAFE

EXTERIOR RESEARCH & DESIGN, LLC.
Certificate of Authorization #9503
353 Christian Street
Oxford, CT 06478
PHONE: (203) 262-9245
FAX: (203) 262-9243

EVALUATION REPORT

TAMKO Building Products, Inc.
PO Box 1404
Joplin, MO 64802

Evaluation Report T40900.04.12-R3
FL3901-R8
Date of Issuance: 04/04/2012
Revision 3: 06/08/2015

SCOPE:
This Evaluation Report is issued under Rule 61G20-3 and the applicable rules and regulations governing the use of construction materials in the State of Florida. The documentation submitted has been reviewed by Robert Nieminen, P.E. for use of the product under the Florida Building Code. The product described herein has been evaluated for compliance with the 5th Edition (2014) Florida Building Code sections noted herein.

DESCRIPTION: MetalWorks® Steel Roofing Systems

LABELING: Labeling shall be in accordance with the requirements the Accredited Quality Assurance Agency noted herein.

CONTINUED COMPLIANCE: This Evaluation Report is valid until such time as the named product(s) changes, the referenced Quality Assurance documentation changes, or provisions of the Code that relate to the product change. Acceptance of this Evaluation Report by the named client constitutes agreement to notify Robert Nieminen, P.E. if the product changes or the referenced Quality Assurance documentation changes. Trinity|ERD requires a complete review of this Evaluation Report relative to updated Code requirements with each Code Cycle.

ADVERTISEMENT: The Evaluation Report number preceded by the words "Trinity | ERD Evaluated" may be displayed in advertising literature. If any portion of the Evaluation Report is displayed, then it shall be done in its entirety.

INSPECTION: Upon request, a copy of this entire Evaluation Report shall be provided to the user by the manufacturer or its distributors and shall be available for inspection at the job site at the request of the Building Official.

This Evaluation Report consists of pages 1 through 5, plus a 15-page Appendix.

Prepared by:

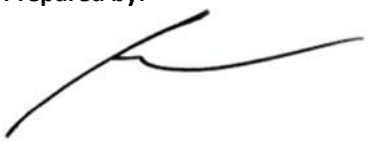

Robert J.M. Nieminen, P.E.
Florida Registration No. 59166, Florida DCA ANE1983

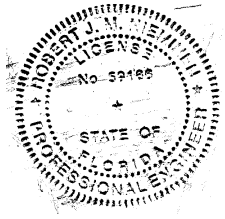

The facsimile seal appearing was authorized by Robert Nieminen, P.E. on 06/08/2015. This does not serve as an electronically signed document. Signed, sealed hardcopies have been transmitted to the Product Approval Administrator and to the named client

CERTIFICATION OF INDEPENDENCE:

1. Exterior Research & Design, LLC. d/b/a Trinity | ERD does not have, nor does it intend to acquire or will it acquire, a financial interest in any company manufacturing or distributing products it evaluates.
2. Exterior Research & Design, LLC. d/b/a Trinity | ERD is not owned, operated or controlled by any company manufacturing or distributing products it evaluates.
3. Robert Nieminen, P.E. does not have nor will acquire, a financial interest in any company manufacturing or distributing products for which the evaluation reports are being issued.
4. Robert Nieminen, P.E. does not have, nor will acquire, a financial interest in any other entity involved in the approval process of the product.
5. This is a building code evaluation. Neither Trinity|ERD nor Robert Nieminen, P.E. are, in any way, the Designer of Record for any project on which this Evaluation Report, or previous versions thereof, is/was used for permitting or design guidance unless retained specifically for that purpose.

ROOFING SYSTEMS EVALUATION:

1. SCOPE:

Product Category: Roofing
Sub-Category: Non-Structural Metal Roofing
Compliance Statement: MetalWorks® Steel Roofing Systems, as produced by TAMKO Building Products, Inc., have demonstrated compliance with the following sections of the Florida Building Code through testing in accordance with the following Standards. Compliance is subject to the Installation Requirements and Limitations / Conditions of Use set forth herein.

2. STANDARDS:

Section	Property	Standard	Year
1504.3.1	Wind	UL 1897	2004

3. REFERENCES:

Entity	Examination	Reference	Date
UL (TST 1740)	Wind Uplift	06NK25561	02/16/2007
UL (TST 1740)	Wind Uplift	06NK25561	02/20/2007
UL (TST 1740)	Wind Uplift	05NK16847	02/28/2007
ICC-ES (EVL 2369)	IBC Compliance	ESR-1129	06/01/2011
Metal suppliers	Material Standards	Mill Certs	12/28/2011
UL (QUA 9625)	Quality Assurance	Service Confirmation	Exp. 01/29/2018

4. PRODUCT DESCRIPTION:

The following MetalWorks® Steel Roofing Shingles are mechanically attached to Approved substrate, as outlined in the Limitations / Conditions of Use herein.

- **AstonWood® Steel Shingles (30 gauge)** are 0.0135-inch thick, pressure-formed, coated sheet-steel panels with factory-formed interlocking edges that are mechanically attached over approved roof decks. AstonWood Steel Shingles (30 gauge) measure nominal 12-$^{5}/_{8}$ x 39-¾ inches with a nominal installed weight of 0.61 lbs/ft^{2} and a textured surface to resemble wood shakes.

Shingle Size:	12-5/8" x 39-3/4"
Exposure:	12"
Coverage per Box:	98.4 sq ft (approx. 1 sq)
Shingles per Box:	30
Shingles per Square:	30
Weight per Shingle:	2 lbs
Weight per Square:	61 lbs

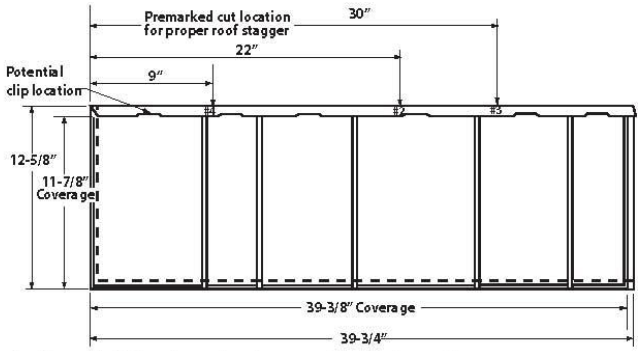

Shingle material:	Nominal 0.0135" thickness, including G-90 galvanization and paint coatings.
Exterior finish:	Fluoropolymer (PVDF) with anti-corrosive primer, 1 mil dry film thickness.
Interior finish:	Wash coat with anti-corrosive primer, 0.6 mil dry film thickness.
Clip:	1-1/4" wide x 2-1/8" long x 1/5" deep
Clip Material:	0.015" thick, G-90 galvanized steel

- **AstonWood® Steel Shingles (28 gauge)** are 0.0162-inch thick, pressure-formed, coated sheet-steel panels with factory-formed interlocking edges that are mechanically attached over approved roof decks. AstonWood Steel Shingles (28 gauge) measure nominal 12-$^{5}/_{8}$ x 39-¾ inches with a nominal installed weight of 0.74 lbs/ft^{2} and a textured surface to resemble wood shakes.

Shingle size:	12-5/8" x 34-3/4"
Exposure:	12"
Coverage per Box:	49.2 sq ft (approx. ½ sq)
Shingles per Box:	15
Shingles per Square:	30
Weight per Shingle:	2.5 lbs
Weight per Square:	74 lbs

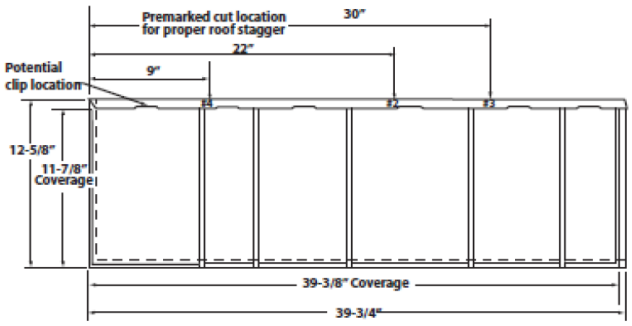

Shingle material:	Nominal 0.0162" thickness, including G-90 galvanization and paint coatings
Exterior Finish:	Fluoropolymer (PVDF) with anti-corrosive primer, 1 mil dry film thickness
Interior Finish:	Wash coat with anti-corrosive primer, 0.6 mil dry film thickness
Clip:	1-1/4" wide x 2-1/8" long x 1/5" deep
Clip Material:	0.015" thick, G-90 galvanized steel

- **Stonecrest® Slate Steel Shingles** are 0.0162-inch thick, pressure-formed, coated sheet-steel panels with factory-formed interlocking edges that are mechanically attached over approved roof decks. Stonecrest Slate Steel Shingles measure nominal 12-$^{5}/_{8}$ x 39-¾ inches with a nominal installed weight of 0.74 lbs/ft^{2} and a textured surface to resemble slate.

Shingle Size:	12-5/8" x 39-3/4"
Exposure:	12"
Coverage per Box:	49.2 sq ft (approx. 1/2 sq)
Shingles per Box:	15
Shingles per Square:	30
Weight per Shingle:	2.5 lbs
Weight per Square:	74 lbs

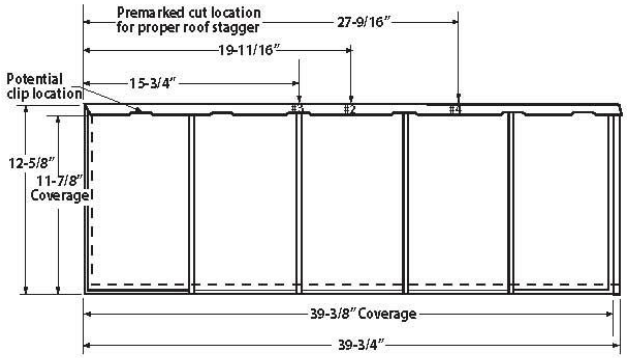

Shingle material:	Nominal 0.0162" thickness, including G-90 galvanization and paint coatings.
Exterior finish:	Fluoropolymer (PVDF) with anti-corrosive primer, 1 mil dry film thickness.
Interior finish:	Wash coat with anti-corrosive primer, 0.6 mil dry film thickness.
Clip:	1-1/4" wide x 2-1/8" long x 1/5" deep
Clip Material:	0.015" thick, G-90 galvanized steel

- **Stonecrest® Tile Steel Shingles** are 0.0162-inch thick, pressure-formed, coated sheet-steel panels with factory-formed interlocking edges that are mechanically attached over approved roof decks. Stonecrest Tile Steel Shingles measure nominal 12-$^{5}/_{8}$ x 39-¾ inches with a nominal installed weight of 0.74 lbs/ft^2 and a textured surface to resemble tile.

Shingle Size:	12-5/8" x 39-3/4"
Exposure:	12"
Coverage per Box:	49.2 sq ft (approx. 1/2 sq)
Shingles per Box:	15
Shingles per Square:	30
Weight per Shingle:	2.5 lbs
Weight per Square:	74 lbs

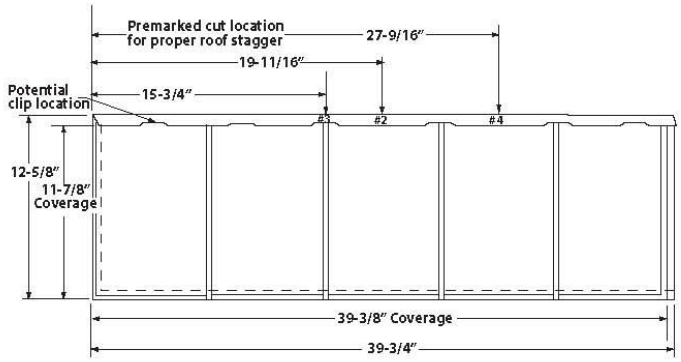

Shingle material:	Nominal 0.0162" thickness, including G-90 galvanization and paint coatings.
Exterior finish:	Fluoropolymer (PVDF) with anti-corrosive primer, 1 mil dry film thickness.
Interior finish:	Wash coat with anti-corrosive primer, 0.6 mil dry film thickness.
Clip:	1-1/4" wide x 2-1/8" long x 1/5" deep
Clip Material:	0.015" thick, G-90 galvanized steel

5. LIMITATIONS:

5.1 This is a building code evaluation. Neither Trinity|ERD nor Robert Nieminen, P.E. are, in any way, the Designer of Record for any project on which this Evaluation Report, or previous versions thereof, is/was used for permitting or design guidance unless retained specifically for that purpose.

5.2 This evaluation report is not for use in HVHZ.

5.3 Fire Classification is not part of this Evaluation Report; refer to current Approved Roofing Materials Directory for fire ratings of this product.

5.4 The minimum roof slope per manufacturer's installation instructions is 3:12. Slope shall not be less than that set forth in FBC 1507.5.2.

5.4.1 For roof slopes 3:12 $\leq \theta <$ 4:12, TAMKO requires use of TW Metal & Tile Underlayment or TW Underlayment over the entire roof deck.

5.5 Sheet materials used to produce the panels shall comply with FBC Section 1507.5.5.

5.6 The roof system evaluation herein pertains to above-deck roof components. Roof decks and structural members shall be in accordance with FBC requirements to the satisfaction of the AHJ. Load resistance of the roof deck shall be documented through proper codified and/or FBC Approval documentation.

5.7 Appendix 1 outlines attachment requirements for design wind pressure resistance. "MDP" = Maximum Design Pressure is the result of testing for wind load resistance based on allowable wind loads. Refer to FBC 1609 for determination of design wind pressures. The MDP for the selected assembly shall meet or exceed the design wind pressure requirements for the project for each pressure zone of the roof.

5.7.1 Reference to "OK" indicates the system performance exceeds requirements for that pressure zone. Reference to "NO" indicates additional testing or rational analysis by a qualified design professional is required to address that particular pressure zone.

5.8 For existing roof decks, fasteners shall be tested in the existing deck for withdrawal resistance. A qualified design professional shall review the data for comparison to the minimum requirements for the system.

5.9 Perimeter and ridge details shall be designed and installed to resist the wind load requirements of FBC Chapter 16.

5.10 All products in the roof assembly shall have quality assurance audit in accordance with the F.A.C. Rule 61G20-3.

6. INSTALLATION:

6.1 MetalWorks® Steel Roofing Shingles shall be installed in accordance with TAMKO Building Products, Inc. published installation instructions, subject to the Limitations / Conditions of Use noted herein.

6.2 System attachment requirements for wind load resistance are set forth in Appendix 1. "MDP" = Maximum Design Pressure is the result of testing for wind load resistance based on allowable wind loads, and reflects the ultimate passing pressure divided by 2 (the 2 to 1 margin of safety per FBC 1504.9 has already been applied). Refer to FBC 1609 for determination of design wind loads.

7. BUILDING PERMIT REQUIREMENTS:

As required by the Building Official or Authority Having Jurisdiction in order to properly evaluate the installation of this product.

8. MANUFACTURING PLANTS:

Contact the named QA entity for manufacturing facilities covered by F.A.C. Rule 61G20-3 QA requirements.

9. QUALITY ASSURANCE ENTITY:

UL LLC – QUA9625; (847) 664-3281

- THE 15-PAGES THAT FOLLOW FORM PART OF THIS EVALUATION REPORT -

ZAPPONE ALUMINUM SHINGLES
Specification Sheet

Normal Composition: Series 3105 Aluminum Alloy.

Design: Shingle contains a concealed nailing flange and a four-way interlocking mechanism, which provides increased stability, resists wind lift and forms a weather tight seal. The shadow-cup, tapered channels and embossing provide a distinctive profile and rich appearance.

Mechanical:	ASTM B209
Finish:	Kynar 500
Colors:	Sierra Brown, Slate Gray, Forest Green, Terra Cotta, Polar White, Mill Finish
Size:	Total - 15" X 9 1/8 " Exposed To Weather - 14 1/2" X 8 1/8" (+/- commercial tolerance)
Weight:	0.42 lb./sq.ft. - 42 lb./100 sq. ft
Thickness:	0.020" (+/- commercial tolerance).
Density:	0.099 lb./cu.in..
Temper:	H 234 (1/4 Hard) before embossing.
Embossing:	Standard
Tensile Strength:	19000 psi.
Yield Strength:	18000 psi.
Elongation:	10 (% in 2 in.)
Rockwell Hardness:	77/78 Scale 15T

Melting Range: 935-1180 Degrees F.

Thermal Conductivity: 0.39 CGS Units @ 77 Degrees F

Wind Rating: 110 MPH

Fire Rating: Class A,B,C

ICBO Approval #: 4995

Recycled Content: 100% Post Consumer

Accessories: (All accessories meet above material specifications)

Aluminum Coil Stock: 16" width, 50-ft. length.

Starter Strip: One piece formed unit, 8' length, 5 1/2" deck apron, 'with S' interlock and fascia guard with drip edge.

Gable End: One piece formed unit, 8' length with fascia guard, drip edge and anti-capillary ridge.

Hip/Ridge Cap: Exposed dimensions - 9 1\2" X 7 1/4", with 'S' interlock, concealed nailing flange and adjustable to roof angle.

End Wall, Side Wall, and Continuous Valley: All are one-piece formed units, 8' length with anti-capillary ridge and 'S' Interlock

Fasteners: Aluminum screw shank nails, 11 gauge with a minimum head

Lake Worth, Florida. The Art of Florida Living.sm

City Of Lake Worth
Department for Community Sustainability
Planning, Zoning and Historic Preservation Division
1900 Second Avenue North · Lake Worth · Florida 33461· Phone: 561-586-1687

MEMORANDUM DATE: April 6, 2016

AGENDA DATE: April 13, 2016

TO: Chair and Members of the Historic Resources Preservation Board

RE: **915 North K Street**

FROM: William Waters, AIA, NCARB, LEED AP BD+C, SEED, ID FL AR94136 & ID5745, Director, Department for Community Sustainability

Aimee N. Sunny, Senior Preservation Coordinator
Department for Community Sustainability

TITLE: **HRPB Project Number 16-00100071:** Consideration of a Certificate of Appropriateness (COA) for window and door replacement for the main single-family structure located at **915 North K Street**; PCN# 38-43-44-21-15-280-0130. The subject property was constructed in 1941 and is located within the Northeast Lucerne Local Historic District.

APPLICANT: Jeff Berkoff, Bella Construction
3626 Embassy Drive
West Palm Beach, FL 33401

OWNER: Phillip Staley & Robert Martin
915 North K Street
Lake Worth, FL 33460

BACKGROUND:

The single-family structure at 915 North K Street was constructed by owner/contractor H.T. Nelson in 1941. The original architectural plans for the structure are available in the City's property file, and appear to have been approved by the Federal Housing Authority in 1940. Based on notes on the drawings, it appears that the set was used as a guide for the construction of several houses including 915 N K St in Lake Worth, and 428 41st Street and 2407 Parker Avenue in West Palm Beach.

The property has public frontage on North K Street to the east. The building was designed and constructed in a Frame Vernacular style with wood lap siding, wood double-hung windows, and an asbestos shingle roof. Character defining features of the building include the one-story construction, original paired and single wood double-hung windows, wood front door, and frame construction. Based on the information in the property file, several exterior alterations have occurred over time. The asbestos shingle roof was replaced with a dimensional asphalt shingle, aluminum lap siding was installed over the original wood siding, a screen was installed around the front porch, and a small addition was constructed on the rear of the structure. Overall, the building retains a good degree of historic integrity of location, setting, materials, and design.

The historic survey file is unclear as to whether this structure is contributing or non-contributing. According to the parcels on the district map, this structure is non-contributing, and all other parcels in the block are contributing. Unfortunately, the Florida Master Site File Numbers in the block do not appropriately align with the correct location and property addresses existing today, making it difficult to determine if the property was intentionally surveyed as non-contributing or if an error occurred with the addressing during the survey process.

REQUEST:

The Applicant has submitted plans to replace (10) original paired and single wood double-hung windows and (2) non-original, non-permitted, aluminum single-hung windows, with new impact aluminum single-hung, casement, and horizontal roller style windows. The Applicant has also requested to replace (1) original wood 5-light single French front door and (2) pairs of non-original aluminum 15-light French doors with new aluminum French doors. The windows are proposed to be replaced in the existing overall openings, however the divided light configuration and appearance of the windows within several openings is proposed to change. The doors are proposed to be replaced in the existing openings, with a divided light pattern to replicate the existing doors.

COMPREHENSIVE PLAN CONSISTENCY:

It is the opinion of Staff that the project, as proposed, is not consistent with the Comprehensive Plan goals and objectives concerning historic preservation and housing due to the fact that the Applicant is proposing a change that will have an adverse effect on the historic integrity of the property. Specifically, the request is in conflict with these objectives:

Goal 1.4 Encourage preservation and rehabilitation of historic and natural resources and where appropriate restrict development that would damage or destroy these resources. (Objective 1.4.2)

Objective 3.2.5: To encourage the identification of historically significant housing, and to promote its preservation and rehabilitation as referenced by the Surveys of Historic Properties conducted for the City of Lake Worth.

Policy 3.2.5.1: Properties of special value for historic, architectural, cultural or aesthetic reasons will be restored and preserved through the enforcement of the City's Historic Preservation Ordinance to the extent feasible.

ANALYSIS:

Staff has reviewed the documentation and materials provided in this application and outlined the applicable guidelines and standards found in the City's Historic Preservation Ordinance, detailed in Attachment 1 – Decision Criteria.

The National Park Service and Secretary of the Interior's Standards have very specific criteria regarding replacement of historic materials. Specifically Standards 2, 5, and 6 apply in this situation:

Standard 2 - The historic character of a property will be retained and preserved. The removal of distinctive materials or alteration of features, spaces, and spatial relationships that characterize a property will be avoided.

Standard 5 - Distinctive materials, features, finishes, and construction techniques or examples of craftsmanship that characterize a property will be preserved.

Standard 6 - Deteriorated historic features will be repaired rather than replaced. Where the severity of deterioration requires replacement of a distinctive feature, the new feature will match the old in design, color, texture, and, where possible, materials. Replacement of missing features will be substantiated by documentary and physical evidence.

It is the analysis of Staff that the project as proposed is not compatible with the review criteria set forth in the City's Land Development Regulations, Historic Preservation Ordinance, Section 23.5-4.

The existing wood double-hung windows are a distinctive feature of the Frame Vernacular style of architecture, and the original design of this structure. According to the Standards in the City's Historic Preservation Ordinance, this distinctive feature should be retained, repaired, and preserved. If the windows cannot be repaired and replacement is necessary, the new feature should match the old in design, color, texture, and materials.

Staff has included the National Park Service's Preservation Brief #9: The Repair of Historic Wood Windows as Attachment #5. According to this Brief, "Windows should be considered significant to a building if they: 1) are original, 2) reflect the original design intent for the building, 3) reflect period or regional styles or building practices, 4) reflect changes to the building resulting from major periods or events, or 5) are examples of exceptional craftsmanship or design." The existing wood windows meet criteria 1, 2, 3, and 5.

With regards to window repair analysis, the Brief states, "In any evaluation, one should note at a minimum, 1) window location, 2) condition of the paint, 3) condition of the frame and sill, 4) condition of the sash (rails, stiles and muntins), 5) glazing problems, 6) hardware, and 7) the overall condition." In analyzing these factors, some windows do require repair for the frames, sills, glazing, and hardware. In some locations, the glazing putty has deteriorated and would need to be removed and replaced with fresh putty. Weatherstripping should be added to properly seal the windows from air and insect infiltration, and increase efficiency. Caulk should be added around the window trim and sills. The sash weights and ropes are still in existence, however several ropes are broken and would need to be reattached. Several windows have deteriorating paint, or have been painted in such a way that they are currently inoperable. With regards to paint, the Brief states, "Since excessive moisture is detrimental to the paint bond, areas of paint blistering, cracking, flaking, and peeling usually identify points of water penetration, moisture saturation, and potential deterioration. Failure of the paint should not, however, be mistakenly interpreted as a sign that the wood is in poor condition and hence, irreparable. Wood is frequently in sound physical condition beneath unsightly paint." As outlined in the Preservation Brief, Staff would classify the repairs needed as Class I and Class II repairs, depending on the opening. The condition of the windows is not the worst that has been reviewed by Staff, and the windows would be capable of being repaired. This analysis also applies to the wood front door.

With regards to energy efficiency and impact several protection, several factors are important for consideration. According to many studies contact by the National Park Service and the Environmental Protection Agency, windows only account for approximately 10% of heat gained and lost in a structure. Roofs and exterior walls account for over 30% of heat gained and lost, typically from poor insulation. The total surface area of the windows compared to the walls and roof is minor in terms of energy efficiency.

Hurricane impact protection can be accomplished in a number of ways including removable steel, aluminum, or fabric panels, and impact colonial shutters.

As outlined in the request by the Applicant, the type, finish, and configuration of the proposed windows is not consistent with the original windows for this structure. The change from double-hung wood windows to aluminum single-hung windows will alter the depth and perspective of the windows, and the change in some openings to horizontal roller and casement style windows will also alter the configuration. These changes would not be in keeping with the City's Historic Preservation Ordinance or the Secretary of the Interior's Standards for Rehabilitation.

Public Comment
At the time of publication of this report, Staff has not received any public comment regarding this project.

CONSEQUENT ACTION:
Approve the application; approve the application with conditions; continue the hearing to a date certain to request additional information; or deny the application.

RECOMMENDATION:
Staff recommends that the Board deny the application as submitted, given that the replacement windows and doors as proposed by the Applicant do not meet the Secretary of the Interior's Standards for Rehabilitation, do not meet the criteria set forth in the City of Lake Worth Land Development Regulations §23.5-4(k), and will have an adverse effect on the integrity and character of the property.

If the Board chooses to approve new replacement windows and doors for the building, Staff recommends the following conditions:

1) Replacement windows shall be wood, wood-clad, or aluminum double-hung windows, match the original window opening sizes and configuration, and have a 1/1 pattern that replicates the (10) original wood double-hung windows and (2) non-original aluminum windows.
2) The front door shall be replaced with a wood, wood-clad, or aluminum French door, with a 5 divided light pattern to replicate the existing door, created by using exterior raised applied ogee muntins. No flat or internal muntins shall be allowed. The proper divided light pattern shall be reviewed by Staff at permitting and installation.
3) The two pairs of non-original French doors on the rear of the structure may be replaced as proposed with a 15 divided light pattern or a 5 divided light pattern to replicate the front door. The pattern shall be created by using exterior raised applied ogee muntins. No flat or internal muntins shall be allowed.
4) All windows and doors shall be subject to staff review for compliance at permitting and during installation.

POTENTIAL MOTION:
I MOVE TO APPROVE/DENY HRPB #16-00100071: Consideration of a Certificate of Appropriateness (COA) for window and door replacement for the single-family structure located at **915 North K Street**, with the conditions recommended by Staff.

ATTACHMENTS:

1. Decision Criteria
2. Application Photographs
3. Proposed Window Information
4. Justification Statement
5. Preservation Brief #9: The Repair of Historic Wood Windows
6. Original Architectural Drawings

LOCATION MAP

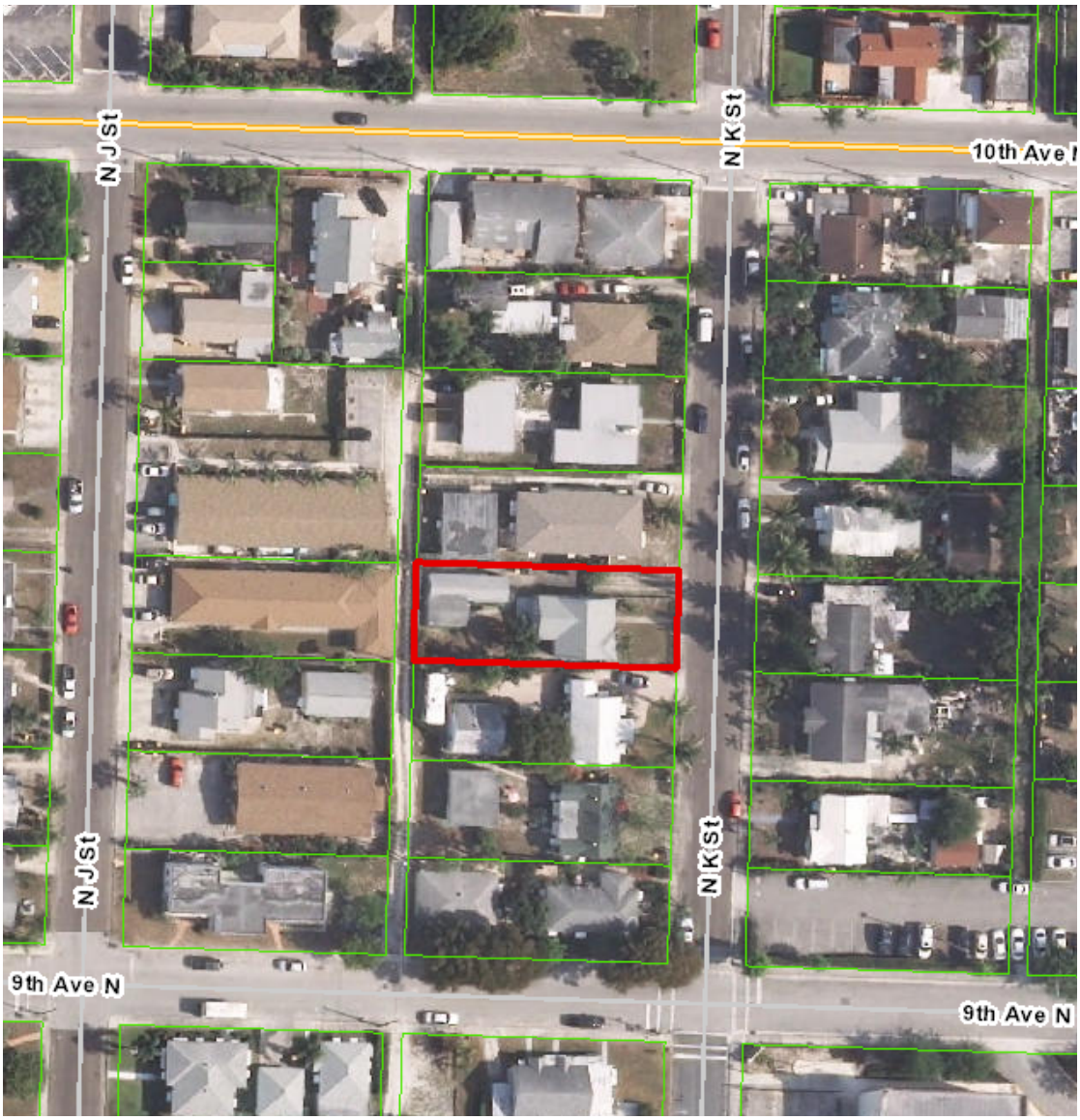

MEMORANDUM

DATE: April 6, 2016

TO: Chair and Members of the Historic Resources Preservation Board

FROM: Aimee N. Sunny, Preservation Planning Coordinator
Department of Community Sustainability

SUBJECT: **HRPB Project Number 16-00100071:** Consideration of a Certificate of Appropriateness (COA) for window and door replacement for the main single-family structure located at **915 North K Street**; PCN# 38-43-44-21-15-280-0130. The subject property was constructed in 1941 and is located within the Northeast Lucerne Local Historic District.

HRPB Meeting Date: April 13, 2016

Per Section 23.5-4k(1) of the historic preservation ordinance, the Board shall use the following criteria in making a determination:

A. What is the effect of the proposed work on the landmark or the property upon which such work is to be done?
Response: It is the opinion of Staff that the work proposed would have an adverse effect on the historic appearance of the building, and is not compatible with the design or style.

B. What is the relationship between such work and other structures on the landmark site or other property in the historic district?
Response: The proposed work will have no direct physical effect on any surrounding properties within the surrounding Northeast Lucerne Local Historic District, however it will have an indirect visual effect on the district.

C. To what extent will the historic, architectural, or archaeological significance, architectural style, design, arrangement, texture, materials and color of the landmark or the property be affected?
Response: The Applicant is proposing work that is not compatible with the architectural design and detailing of the building by removing the historic wood double-hung windows and replacing them with aluminum single-hung, casement, and horizontal roller windows. The Applicant is also proposing to remove the original wood front door and replace it with an aluminum door.

D. Would denial of a certificate of appropriateness deprive the property owner of reasonable beneficial use of his property?
Response: No, the denial of this COA as submitted does not prevent the Applicant from potentially proposing other alterations to the structure, nor would it make the building uninhabitable.

E. Are the applicant's plans technically feasible and capable of being carried out within a reasonable time?
Response: Yes.

F. Do the plans satisfy the applicable portions of the general criteria contained in the United States Secretary of the Interior's Standards for Rehabilitation then in effect or as they may be revised from time to time? The current version of the Secretary's Guidelines provides as follows:

(1) A property shall be used for its historic purpose or be placed in a new use that requires minimal change to the defining characteristics of the building and its site and environment.
Response: No change to the use of the property is proposed.

(2) This historic character of the property shall be retained and preserved. The removal of historic materials or alteration of features and spaces that characterize a property shall be avoided.
Response: The Applicant is proposing to remove (10) original windows and (1) original door, all of which are character defining features of this property.

(3) Each property shall be recognized as a physical record of its time, place and use. Changes that create a false sense of historical development, such as adding conjectural features or architectural elements from other buildings, shall not be undertaken.
Response: Not applicable to this project.

(4) Most properties change over time; those changes that have acquired historic significance in their own right shall be retained and preserved.
Response: Not applicable to this project.

(5) Distinctive features, finishes and construction techniques or examples of craftsmanship that characterize a historic property shall be preserved.
Response: The original windows and doors are an example of craftsmanship that characterizes not only this structure, but also the time period and architectural style in general.

(6) Deteriorated architectural features shall be repaired rather than replaced, wherever possible. In the event replacement is necessary, the new material should match the material being replaced in composition, design, color, texture, and other visual qualities.
Response: The proposed window replacement does not match the existing windows in style, composition, or design. Specifically replacing paired double-hung windows with horizontal roller windows is altering the visual appearance of the paired windows and decorative wood trim. Similarly, replacing a double-hung window with a casement window will alter the composition and visual quality of the opening. The proposed front door replacement will closely match the existing door, however the overall size of the glass lights will be altered slightly.

Repair or replacement of missing architectural features should be based on accurate duplications of features, substantiated by historical, physical, or pictorial evidence rather than on conjectural designs or because the different architectural elements from other buildings or structures happen to be available for relocation.
Response: Not applicable to this project.

(7) Chemical or physical treatments, such as sandblasting, that cause damage to historic materials, shall not be used. The surface cleaning of structures, if appropriate, shall be undertaken using the gentlest means possible.
Response: Not applicable to this request. If the Applicant chooses to repair rather than replace the windows, Staff would recommend the gentlest means possible to remove the deteriorating paint.

(8) Significant archeological resources affected by a project shall be protected and preserved. If such resources must be disturbed, mitigation measures shall be undertaken.
Response: Not applicable to this project.

(9) New additions, exterior alterations or related new construction shall not destroy historic materials that characterize the property. The new construction shall be differentiated from the old and shall be compatible with the massing, size, scale and architectural features to protect the historic integrity of the property and its environment.
Response: The proposed alterations remove historic windows that characterize the property.

(10) New additions and adjacent or related new construction shall be undertaken in such manner that, if removed in the future, the essential form and integrity of the historic building and its environment would be unimpaired.
Response: Not applicable to this project.

G. What are the effects of the requested change on those elements or features of the structure which served as the basis for its designation and will the requested changes cause the least possible adverse effect on those elements or features?
Response: It is the opinion of Staff that the historic character of the property would be adversely affected by the proposed project as submitted by the Applicant, as outlined above. The requested exterior alterations do not represent the least possible adverse effect on the property. There are alternate options, including repair of the existing windows and doors, or replacement with impact double-hung wood or wood-clad windows, installed to replicate the existing size, location, and configuration of the existing wood windows.

Section 23.5-4k(2). Additional guidelines for alterations.

In approving or denying applications for certificates of appropriateness for alterations, the HRPB shall also consider the following additional guidelines:

A. Is every reasonable effort being made to provide a compatible use for a property that requires minimal alteration of the building, structure or site and its environment, or to use the property for its originally intended purpose?
Response: No change to the use of the property is proposed.

B. Are the distinguishing original qualities or character of a building, structure or site and its environment being destroyed? The removal or alteration of any historic material or distinctive architectural features shall be avoided whenever possible.
Response: The windows can be considered a distinctive architectural feature and should not be removed unless the level of deterioration is such that the windows cannot be repaired. In that case, the replacement windows should replicate the original windows as closely as possible.

C. When a certificate of appropriateness is requested to replace windows or doors, the HRPB shall permit the property owner's original design when the HRPB's alternative design would result in an increase in cost of thirty (30) percent above the owner's original cost. The owner shall be required to demonstrate to the HRPB that:
(1) The work to be performed will conform to the original window openings of the structure; and

Response: The applicant meets this criterion regarding the general location of the windows, however the change in configuration from the paired double-hung windows to a single horizontal roller window will alter the appearance of the opening.

(2) That the replacement windows or doors with less expensive materials will achieve a savings in excess of thirty (30) percent over historically compatible materials otherwise required by this code.

Response: Staff must defer to the applicant.

915

FRONT ①
DOOR
EAST
FACING
OPEN INWARDS

BEWARE
of DOG

BEWARE
of DOG

Living Room
Double
East Facing

BEWARE
DOG

LIVING ROOM (8)
NORTH SIDE
Double

LIVING Room
NORTH SIDE
Double

B673-72

WARNING
ADVERTENCIA

Bella Construction Corp

Quality Design-Build & Remodeling Contractors

CGC 1512434

3626 EMBASSY DRIVE WEST PALM BEACH FL 33401

*Ph: [561] 722-6402 ** ** jb@bellaconst.com*

915 N 'K' ST.

- REPLACE (9) WINDOWS & (3) DOORS W/ NEW IMPACT UNITS
- RE-BUCK OPENINGS AS NEEDED
- ALL WORK TO CONFORM TO 2015 F.B.C.

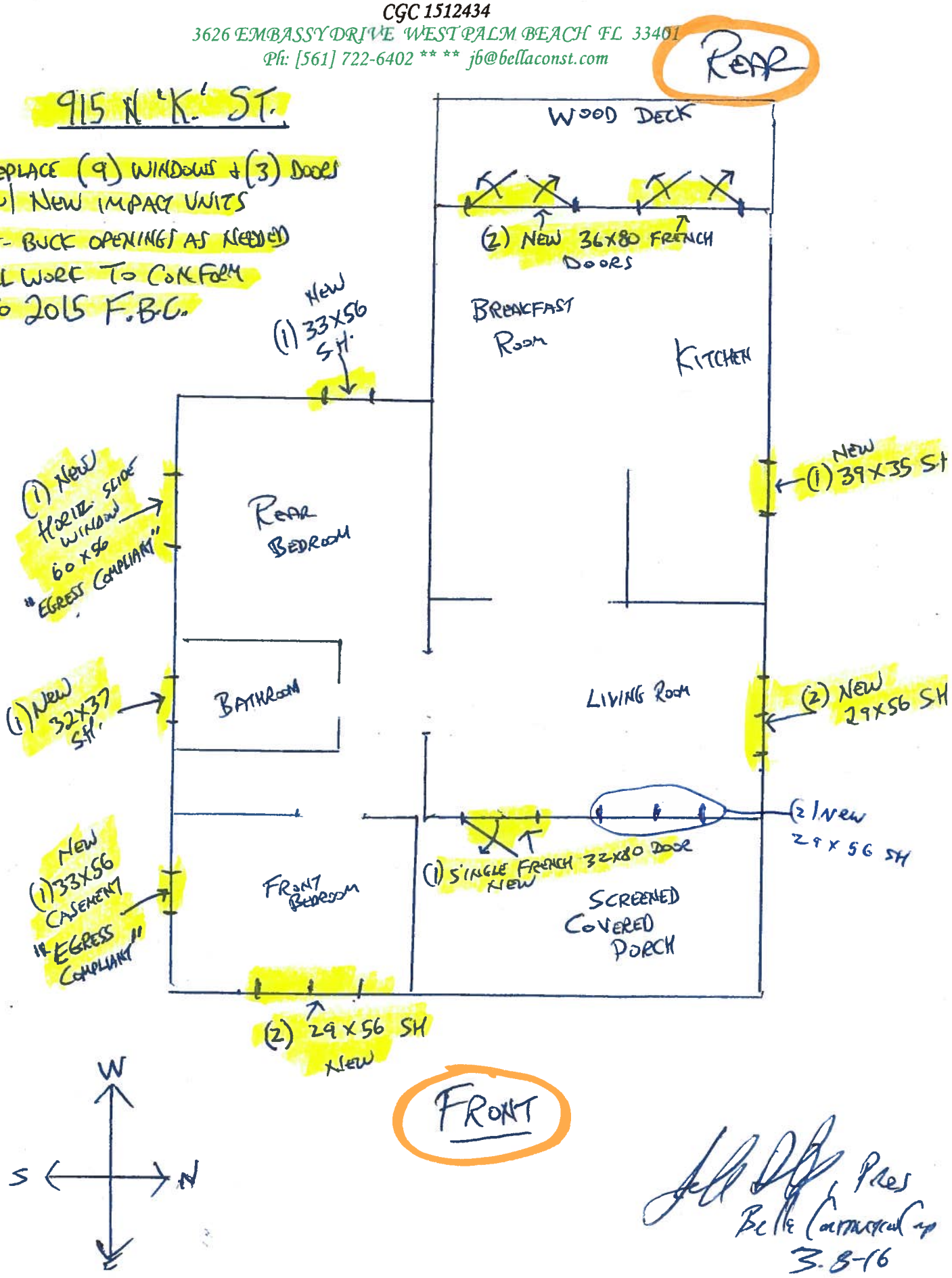

Pres
Bella Construction Corp
3-8-16

915 N 'K' ST.

FRONT (EAST) ELEVATION

915 N 'K' ST.

NORTH SIDE ELEVATION

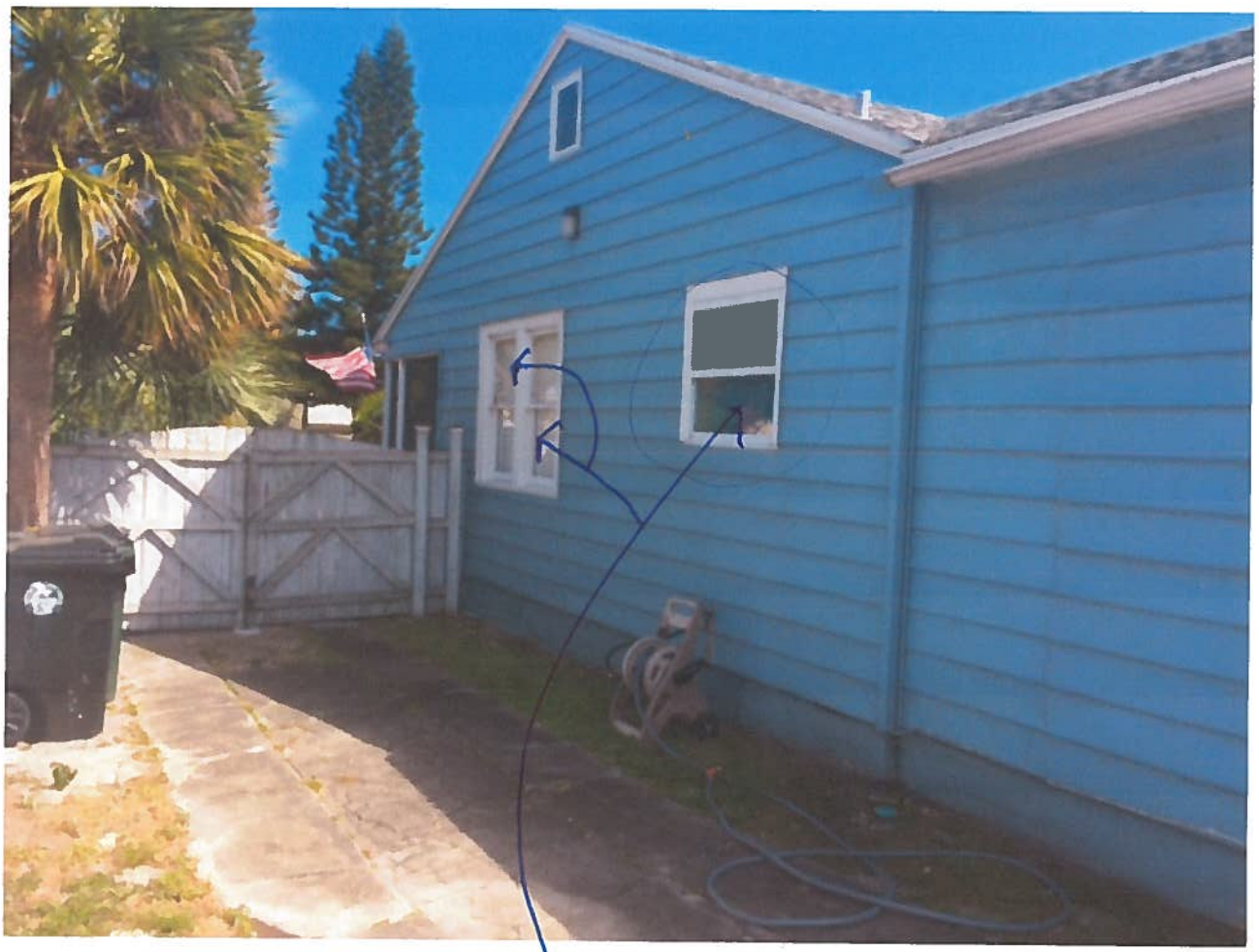

915 N 'K' ST

REAR (WEST) ELEVATION

915 N 'K' ST.

REAR BEDROOM (WEST) ELEVATION

915 N 'K' ST.

SOUTH SIDE ELEVATION

(4) NEW WINDOWS

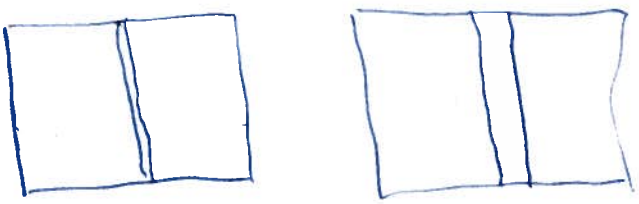

915 N 'K' ST

REAR GARAGE STRUCTURE

NO WORK

PGT - French Door

MIAMI-DADE COUNTY
DEPARTMENT OF REGULATORY AND ECONOMIC RESOURCES (RER)
BOARD AND CODE ADMINISTRATION DIVISION

MIAMI-DADE COUNTY, FLORIDA
PRODUCT CONTROL SECTION
11805 SW 26 Street, Room 208
T (786) 315-2590 F (786) 315-2599
www.miamidade.gov/economy

NOTICE OF ACCEPTANCE (NOA)

PGT Industries, Inc.
1070 Technology Drive,
Nokomis, Fl. 34275

SCOPE:

This NOA is being issued under the applicable rules and regulations governing the use of construction materials. The documentation submitted has been reviewed and accepted by Miami-Dade County RER-Product Control Section to be used in Miami-Dade County and other areas where allowed by the Authority Having Jurisdiction (AHJ).

This NOA shall not be valid after the expiration date stated below. The Miami-Dade County Product Control Section (In Miami-Dade County) and/ or the AHJ (in areas other than Miami-Dade County) reserve the right to have this product or material tested for quality assurance purposes. If this product or material fails to perform in the accepted manner, the manufacturer will incur the expense of such testing and the AHJ may immediately revoke, modify, or suspend the use of such product or material within their jurisdiction. RER reserves the right to revoke this acceptance, if it is determined by Miami-Dade County Product Control Section that this product or material fails to meet the requirements of the applicable building code.

This product is approved as described herein, and has been designed to comply with the Florida Building Code, including the High Velocity Hurricane Zone.

DESCRIPTION: Series "FD-750" Outswing Aluminum French Door w/ Sidelites – L.M.I.

APPROVAL DOCUMENT: Drawing No. **8000-11**, titled "Alum. French Door & Side Lites, Impact", sheets 01 through 12 of 12, dated 12/23/04, with revision "E" dated 10/12/11, prepared by manufacturer, signed and sealed by Anthony Lynn Miller, P. E., bearing the Miami-Dade County Product Control Section Renewal stamp with the Notice of Acceptance number and Expiration date by the Miami-Dade County Product Control Section.

MISSILE IMPACT RATING: Large and Small Missile Impact Resistant

LABELING: Each unit shall bear a permanent label with the manufacturer's name or logo, city, state, model/ series, and following statement: "Miami-Dade County Product Control Approved", unless otherwise noted herein.

REVISION of this NOA shall be considered after a renewal application has been filed and there has been no change in the applicable building code negatively affecting the performance of this product.

TERMINATION of this NOA will occur after the expiration date or if there has been a revision or change in the materials, use, and/ or manufacture of the product or process. Misuse of this NOA as an endorsement of any product, for sales, advertising or any other purposes shall automatically terminate this NOA. Failure to comply with any section of this NOA shall be cause for termination and removal of NOA.

ADVERTISEMENT: The NOA number preceded by the words Miami-Dade County, Florida, and followed by the expiration date may be displayed in advertising literature. If any portion of the NOA is displayed, then it shall be done in its entirety.

INSPECTION: A copy of this entire NOA shall be provided to the user by the manufacturer or its distributors and shall be available for inspection at the job site at the request of the Building Official.

This NOA **revises and renews NOA No. 11-1013.24** and consists of this page 1 and evidence pages E-1, E-2, E-3 and E-4, as well as approval document mentioned above.

The submitted documentation was reviewed by **Jaime D. Gascon, P. E.**

MIAMI-DADE COUNTY APPROVED

J. Gascon 2/11/15

NOA No. 14-1117.05
Expiration Date: February 24, 2020
Approval Date: February 19, 2015

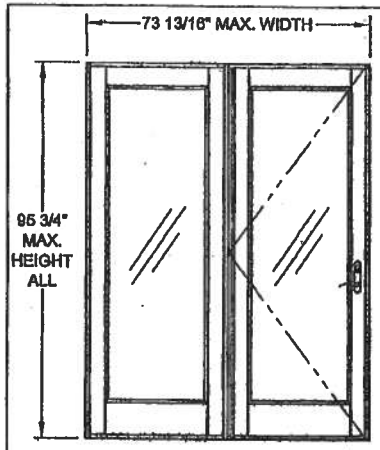

OX OR XO

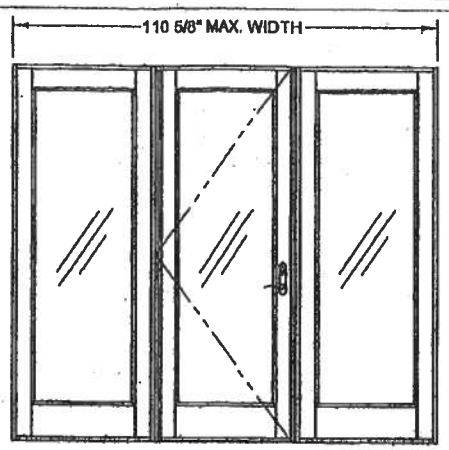

OXO

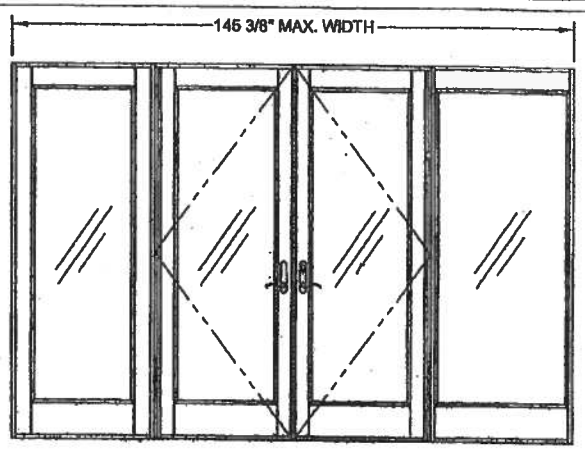

OXXO (SHOWING EACH VERSION SIDELITE)

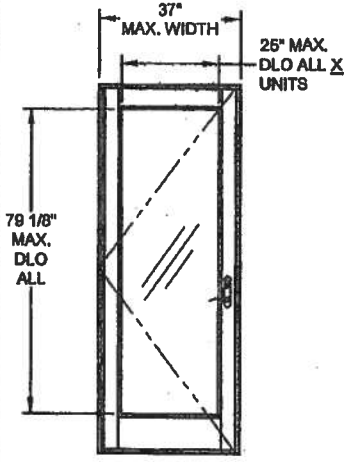

X

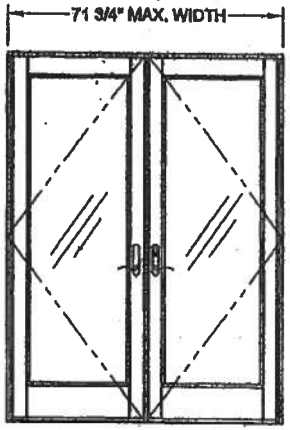

XX

O (FULL JAMB)

O (NARROW JAMB)

NOTES:
1. CONFIGURATIONS WITH SIDE LITES CAN BE EITHER NARROW JAMB OR FULL JAMB VERSION.
2. FOR ANCHOR SPACING AND DETAILS SEE SHEETS 9 THROUGH 11.
3. FOR VERTICAL SECTIONS SEE SHEET 5 AND FOR HORIZONTAL SECTIONS SEE SHEET 6.

Revised By:	Date:	Revision:	
F.K.	10/13/09	B	NO CHANGE THIS SHEET
J.R.	09/23/09	C	NO CHANGE THIS SHEET
J.R.	01/25/10	D	NO CHANGES THIS SHEET
Drawn By: F.K.	Date: 12/23/04	Checked By: L.T.	Date: 4/8/05

1070 TECHNOLOGY DRIVE
NOKOMIS, FL 34275

P.O. BOX 1589
NOKOMIS, FL 34274

PGT

Description: EXAMPLE ELEVATIONS

Title: ALUM. FRENCH DOOR & SIDE LITES, IMPACT

Series/Model:	Scale:	Sheet:	Drawing No.:	Rev:
FD760	NTS	4 of 12	8000-11	E

PRODUCT REVISED
as complying with the Florida Building Code
Acceptance No. 11-1013.24
Expiration Date: Dec. 24, 2015
By: Miami-Dade Product Control

PRODUCT RENEWED
as complying with the Florida Building Code
Acceptance No. 14-1117.05
Expiration Date: 02/24/2020
By: Miami Dade Product Control

ANTHONY LYNN MILLER
LICENSE
No. 58705
STATE OF FLORIDA
PROFESSIONAL ENGINEER
A. LYNN MILLER, P.E.
FL P.E.# 58705

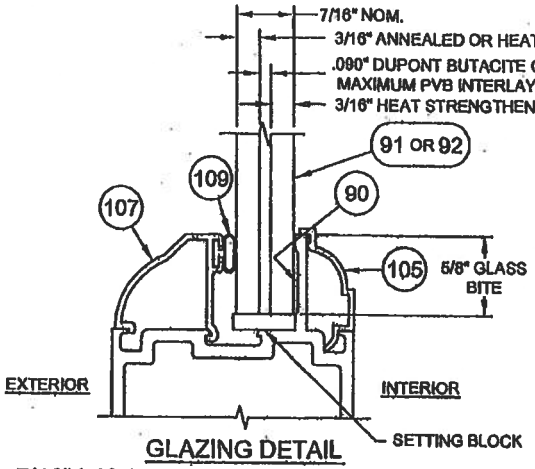

GLAZING DETAIL

7/16" LAMI GLASS W/ PVB INTERLAYER

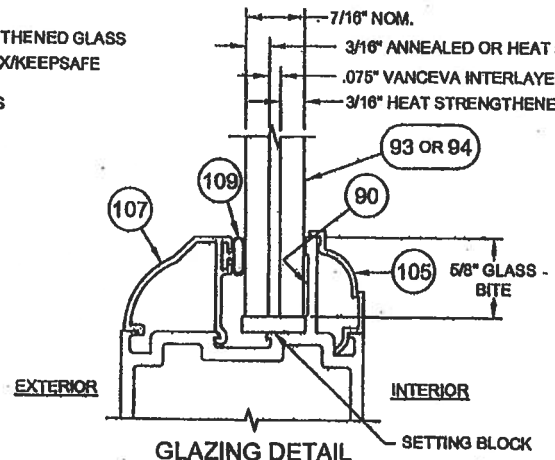

GLAZING DETAIL

7/16" LAMI GLASS W/ VANCEVA INTERLAYER

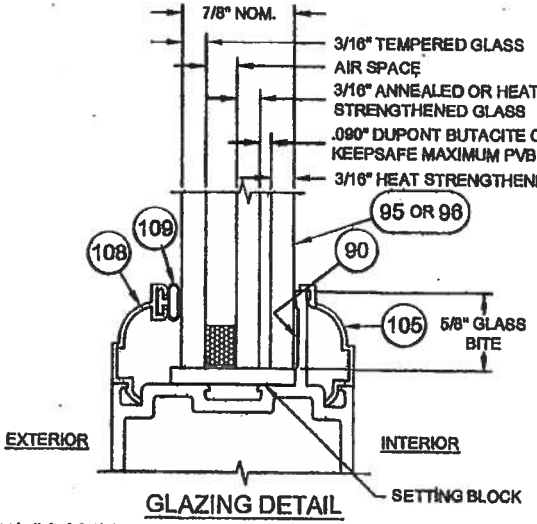

GLAZING DETAIL

7/8" LAMI I.G. GLASS W/ PVB INTERLAYER

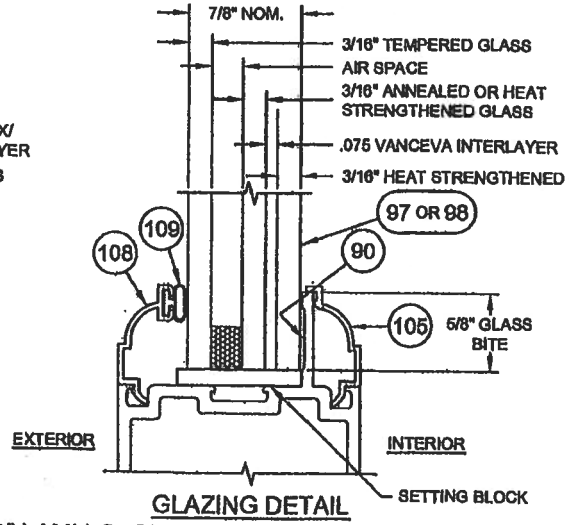

GLAZING DETAIL

7/8" LAMI I.G. GLASS W/ VANCEVA INTERLAYER

PRODUCT REVISED
as complying with the Florida Building Code
Acceptance No. 11-1013.24
Expiration Date: DEC 24, 2015
By: Miami Dade Product Control

PRODUCT RENEWED
as complying with the Florida Building Code
Acceptance No. 14-1117.05
Expiration Date: 02/24/2020
By: Miami Dade Product Control

ANTHONY LYNN MILLER LICENSE No. 58705 STATE OF FLORIDA PROFESSIONAL ENGINEER
A. LYNN MILLER, P.E.
FL P.E.# 58705

Revised By:	Date:	Revisions:	
F.K.	10/12/06	B	NO CHANGE THIS SHEET
Revised By:	Date:	Revisions:	
J.R.	06/12/09	C	NO CHANGE THIS SHEET
Revised By:	Date:	Revisions:	
J.R.	01/28/10	D	NO CHANGES THIS SHEET
Drawn By:	Date:	Checked By:	Date:
F.K.	12/23/04	L.Y.	4/8/05

1070 TECHNOLOGY DRIVE
NOKOMIS, FL 34275
P.O. BOX 1529
NOKOMIS, FL 34274

PGT

Description: GLAZING DETAILS

Title: ALUM. FRENCH DOOR & SIDE LITES, IMPACT

Series/Model:	Scale:	Sheet	Drawing No.	Rev.
FD750	FULL	2 of 12	8000-11	E

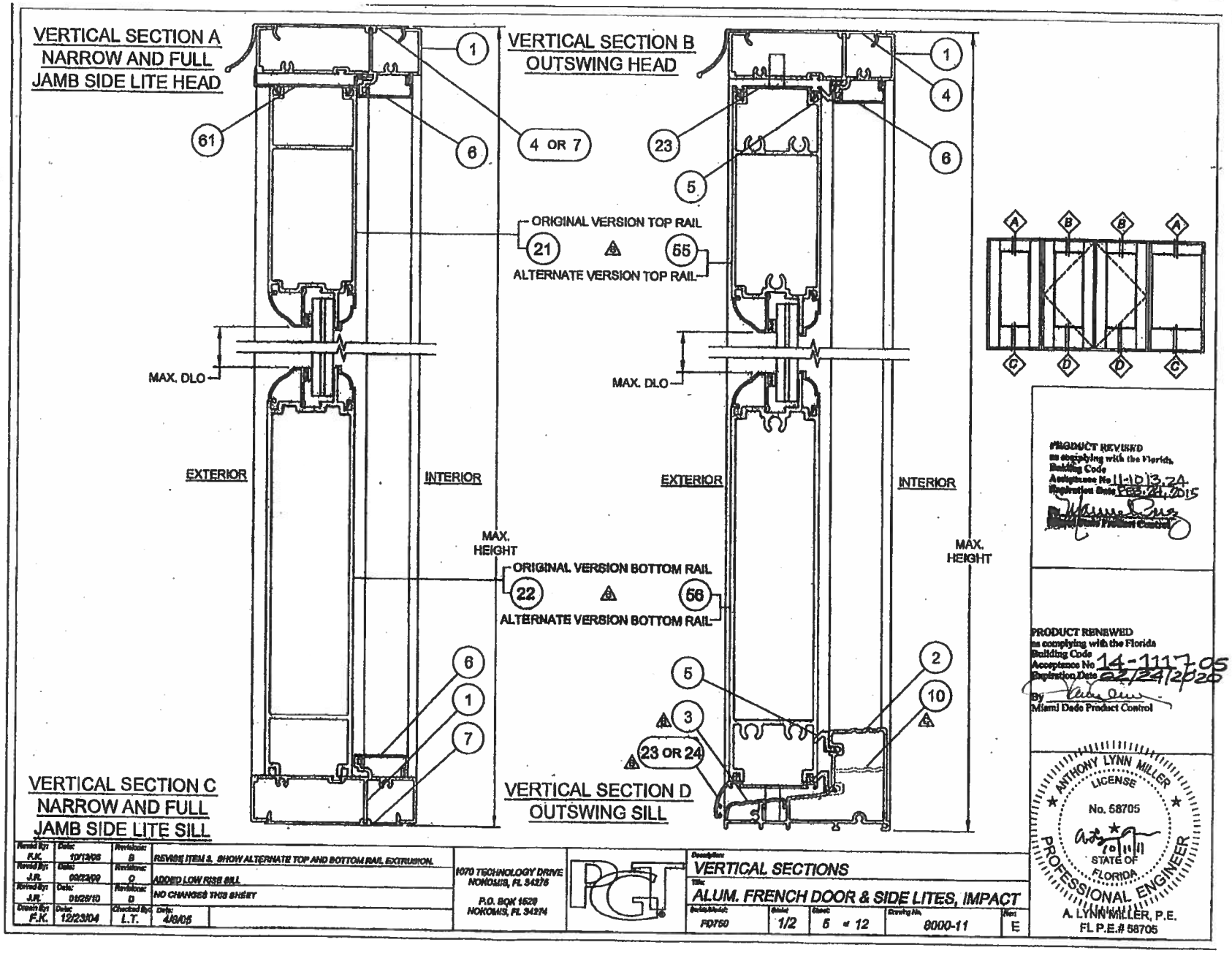

PRODUCT REVIEWED
as complying with the Florida Building Code
Acceptance No 11-1013.24
Expiration Date Feb. 24, 2015
By
Miami Dade Product Control

PRODUCT RENEWED
as complying with the Florida Building Code
Acceptance No 14-1117.05
Expiration Date 02/24/2020
By
Miami Dade Product Control

ANTHONY LYNN MILLER
LICENSE
No. 58705
STATE OF FLORIDA
PROFESSIONAL ENGINEER
A. LYNN MILLER, P.E.
FL P.E.# 58705

Revised By	Date	Revision	
F.K.	10/13/06	B	REVISE ITEM 3. SHOW ALTERNATE TOP AND BOTTOM RAIL EXTRUSION.
J.R.	09/23/09	C	ADDED LOW RISE SILL
J.R.	01/25/10	D	NO CHANGES THIS SHEET
Drawn By F.K.	Date 12/23/04	Checked By L.T.	Date 4/8/05

1070 TECHNOLOGY DRIVE
NOKOMIS, FL 34275
P.O. BOX 1628
NOKOMIS, FL 34274

PGT

VERTICAL SECTIONS

ALUM. FRENCH DOOR & SIDE LITES, IMPACT

Series/Model	Sheet	Scale	Drawing No.	Rev
FD750	1/2	6 = 12	8000-11	E

FLORIDA DEPARTMENT OF
Business & Professional Regulation

DBPR HOME | ABOUT DBPR | DBPR DIVISIONS | CONTACT DBPR

Florida Department of Business & Professional Regulation
License efficiently. Regulate fairly.

OFFICE OF THE SECRETARY

BCIS Home | Log In | User Registration | Hot Topics | Submit Surcharge | Stats & Facts | Publications | FBC Staff | BCIS Site Map | Links | Search

Product Approval
USER: Public User

Product Approval Menu > Product or Application Search > Application List > **Application Detail**

FL #	FL15351-R3
Application Type	Affirmation
Code Version	2014
Application Status	Approved
Comments	
Archived	☐
Product Manufacturer	MI Windows and Doors
Address/Phone/Email	650 West Market Street Gratz, PA 17030 (717) 365-3300 Ext 2560 bsitlinger@miwd.com
Authorized Signature	Brent Sitlinger bsitlinger@miwd.com
Technical Representative Address/Phone/Email	
Quality Assurance Representative Address/Phone/Email	
Category	Windows
Subcategory	Horizontal Slider
Compliance Method	Certification Mark or Listing
Certification Agency	American Architectural Manufacturers Association
Validated By	Steven M. Urich, PE ☐ Validation Checklist - Hardcopy Received

Referenced Standard and Year (of Standard)

Standard	Year
AAMA 506	2006
AAMA/WDMA/CSA 101/I.S. 2/A440	2008

Equivalence of Product Standards Certified By

☑ I affirm that there are no changes in the new Florida Building Code which affect my product(s) and my product(s) are in compliance with the new Florida Building Code.

Documentation from approved Evaluation or Validation Entity ○ Yes ○ No ○ N/A

FL15351_R3_COC_FL15351-COMP.pdf

Product Approval Method: Method 1 Option A

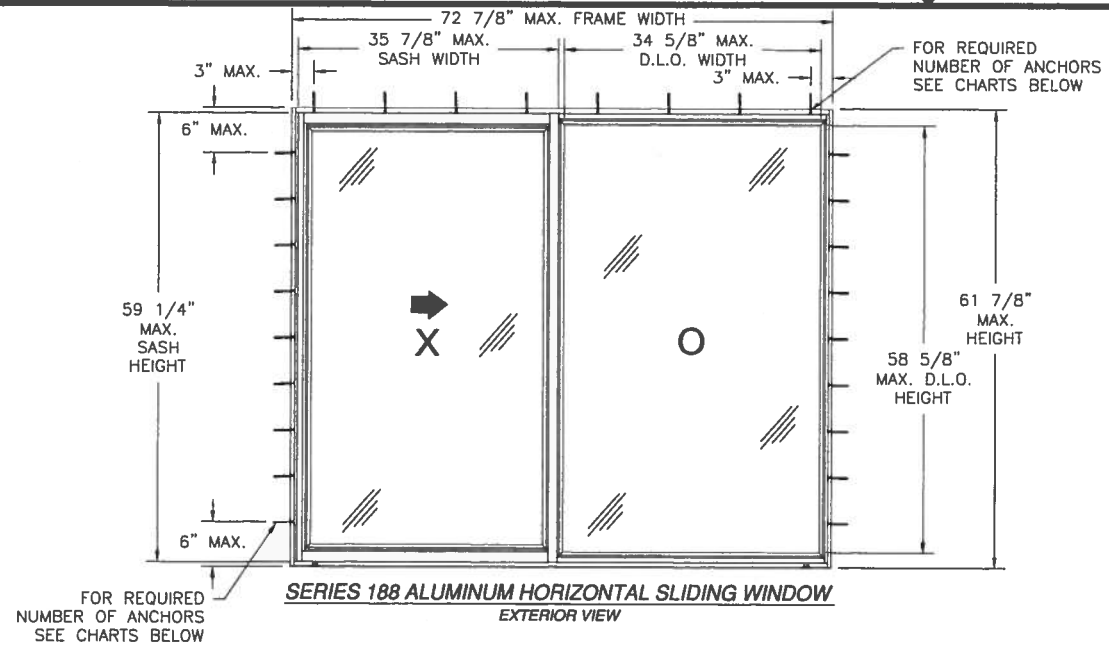

SERIES 188 ALUMINUM HORIZONTAL SLIDING WINDOW

EXTERIOR VIEW

DESIGN PRESSURE RATING	IMPACT RATING
±55.0PSF	LARGE AND SMALL MISSILE IMPACT

MISSILE LEVEL D, WIND ZONE 3, WITH IG GLASS, OPTION 2

DESIGN PRESSURE RATING	IMPACT RATING
±45.0PSF	LARGE AND SMALL MISSILE IMPACT

MISSILE LEVEL D, WIND ZONE 3, WITH SINGLE GLASS, OPTION 1

Number of anchor locations without rigid fillers

	Single Panel and Total Unit Width (in)							
	18.0		24.0		30.0		36.44	
Height	36.0		48.0		60.0		72.88	
(in)	Head	Jamb	Head	Jamb	Head	Jamb	Head	Jamb
24.0	3	2	4	2	5	3	6	3
30.0	3	3	4	3	5	4	6	4
36.0	3	3	4	4	5	4	6	5
42.0	3	3	4	4	5	5	6	6
48.0	3	4	4	5	6	6	7	7
54.0	4	4	5	5	6	7	8	8
60.0	4	5	5	6	7	7	8	9
61.88	4	5	5	6	7	7	8	9

Number of anchor locations with rigid fillers

	Single Panel and Total Unit Width (in)							
	18.0		24.0		30.0		36.44	
Height	36.0		48.0		60.0		72.88	
(in)	Head	Jamb	Head	Jamb	Head	Jamb	Head	Jamb
24.0	3	2	4	2	5	2	6	2
30.0	3	3	4	3	5	3	6	3
36.0	3	3	4	3	5	3	6	3
42.0	3	3	4	3	5	3	6	3
48.0	3	4	4	4	5	4	6	4
54.0	3	4	4	4	5	4	6	4
60.0	3	4	4	4	5	4	6	4
61.88	3	5	4	5	5	5	6	5

REVISIONS			
REV	DESCRIPTION	DATE	APPROVED
A	ADDED RIGID FILLER INSTALLATION	4/25/11	R.L.

NOTES:

1) THE PRODUCT SHOWN HEREIN IS DESIGNED AND MANUFACTURED TO COMPLY WITH REQUIREMENTS OF THE FLORIDA BUILDING CODE.
2) WOOD FRAMING AND MASONRY OPENING TO BE DESIGNED AND ANCHORED TO PROPERLY TRANSFER ALL LOADS TO STRUCTURE. FRAMING AND MASONRY OPENING IS THE RESPONSIBILITY OF THE ARCHITECT OR ENGINEER OF RECORD.
3) 1X BUCK OVER MASONRY/CONCRETE IS OPTIONAL. WHERE 1X BUCK IS NOT USED DISSIMILAR MATERIALS MUST BE SEPARATED WITH APPROVED COATING OR MEMBRANE. SELECTION OF COATING OR MEMBRANE IS THE RESPONSIBILITY OF THE ARCHITECT OR ENGINEER OF RECORD.
4) ALLOWABLE STRESS INCREASE OF 1/3 WAS NOT USED IN THE DESIGN OF THE PRODUCT SHOWN HEREIN. WIND LOAD DURATION FACTOR Cd=1.6 WAS USED FOR WOOD ANCHOR CALCULATIONS.
5) FRAME AND SASH MATERIAL: EXTRUDED ALUMINUM 6063-T6 .055" THICK.
6) UNITS MUST BE GLAZED PER ASTM E1300. SEE SHEET 2 FOR GLAZING OPTIONS.
7) APPROVED IMPACT PROTECTIVE SYSTEM IS NOT REQUIRED FOR THIS PRODUCT IN WIND BORNE DEBRIS REGIONS.
8) SHIM AS REQUIRED AT EACH INSTALLATION ANCHOR WITH LOAD BEARING SHIM. SHIM WHERE SPACE OF 1/16" OR GREATER OCCURS. MAXIMUM ALLOWABLE SHIM STACK TO BE 1/4".
9) FOR ANCHORING INTO MASONRY USE 3/16" ITW TAPCONS WITH SUFFICIENT LENGTH TO ACHIEVE A 1 1/4" MINIMUM EMBEDMENT INTO SUBSTRATE WITH 2 5/8" MINIMUM EDGE DISTANCE. LOCATE ANCHORS AS SHOWN IN ELEVATIONS AND INSTALLATION DETAILS.
10) FOR ANCHORING INTO WOOD FRAMING OR 2X BUCK USE #10 WOOD SCREW WITH SUFFICIENT LENGTH TO ACHIEVE A 1 3/8" MINIMUM EMBEDMENT INTO SUBSTRATE. LOCATE ANCHORS AS SHOWN IN ELEVATIONS AND INSTALLATION DETAILS.
11) FOR ANCHORING INTO 16GA. (.060" MIN.) STEEL FRAMING USE #10 SELF TAPPING SCREW WITH SUFFICIENT LENGTH TO ACHIEVE 3-THREADS BEYOND SUBSTRATE MINIMUM EMBEDMENT. LOCATE ANCHORS AS SHOWN IN ELEVATIONS AND INSTALLATION DETAILS.
12) ALL FASTENERS TO BE CORROSION RESISTANT.
13) INSTALLATION ANCHORS SHALL BE INSTALLED IN ACCORDANCE WITH ANCHOR MANUFACTURER'S INSTALLATION INSTRUCTIONS, AND ANCHORS SHALL NOT BE USED IN SUBSTRATES WITH STRENGTHS LESS THAN THE MINIMUM STRENGTH SPECIFIED BELOW:
    A. WOOD - MINIMUM SPECIFIC GRAVITY OF G=0.42
    B. CONCRETE - MINIMUM COMPRESSIVE STRENGTH OF 3,200 PSI.
    C. MASONRY - STRENGTH CONFORMANCE TO ASTM C-90, GRADE N, TYPE 1 (OR GREATER).
    D. STEEL FRAMING - 16GA. (.060" MIN.)
14) APPROVED CONFIGURATIONS: XO, OX

SIGNED: 04/25/2011

TABLE OF CONTENTS

SHEET NO.	DESCRIPTION
1	ELEVATION, ANCHORING LAYOUT AND NOTES
2	INSTALLATION DETAILS AND GLAZING OPTIONS
3 - 7	INSTALLATION DETAILS

MI WINDOWS AND DOORS
650 WEST MARKET STREET
GRANTZ, PA 17030-0370

SERIES 188 ALUMINUM HORIZONTAL SLIDING WINDOW
TWIN - IMPACT RESISTANT
ELEVATION, ANCHORING LAYOUT AND NOTES

DRAWN:	DWG NO.	REV
TJH	08-01161	A
SCALE NTS	DATE 10/26/10	SHEET 1 OF 7

LUIS R. LOMAS LICENSE No. 62514 STATE OF FLORIDA PROFESSIONAL ENGINEER

Business & Professional Regulation

Florida Department of Business & Professional Regulation

Product Approval
USER: Public User

FL #	FL17499
Application Type	New
Code Version	2014
Application Status	Approved
	*Approved by DBPR. Approvals by DBPR shall be reviewed and ratified by the POC and/or the Commission if necessary.
Comments	
Archived	☐
Product Manufacturer Address/Phone/Email	MI Windows and Doors 650 West Market Street Gratz, PA 17030 (717) 365-3300 Ext 2560 bsitlinger@miwd.com
Authorized Signature	Brent Sitlinger bsitlinger@miwd.com
Technical Representative Address/Phone/Email	
Quality Assurance Representative Address/Phone/Email	
Category	Windows
Subcategory	Single Hung
Compliance Method	Certification Mark or Listing
Certification Agency Validated By	American Architectural Manufacturers Association Steven M. Urich, PE ☑ Validation Checklist - Hardcopy Received

Referenced Standard and Year (of Standard)	Standard	Year
	AAMA 506	2008
	AAMA/WDMA/CSA 101/I.S.2/A440	2008

Equivalence of Product Standards Certified By	
Product Approval Method	Method 1 Option A
Date Submitted	02/18/2015
Date Validated	02/18/2015
Date Pending FBC Approval	
Date Approved	02/21/2015

REVISIONS			
REV	DESCRIPTION	DATE	APPROVED

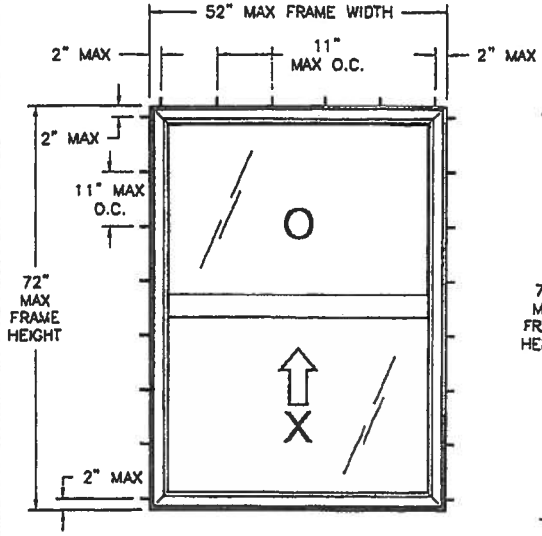

185 ALUMINUM SINGLE HUNG WINDOW
EXTERIOR VIEW
FLANGE & FINLESS INSTALLATION
SEE CHART #1 FOR SMALLER UNITS REQUIRED ANCHORS

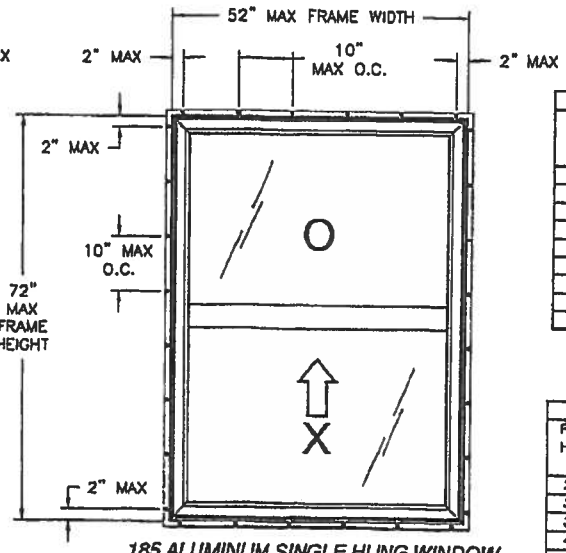

185 ALUMINUM SINGLE HUNG WINDOW
EXTERIOR VIEW
FIN INSTALLATION
SEE CHART #2 FOR SMALLER UNITS REQUIRED ANCHORS

CHART #1

Frame Height (in)	Number of anchor locations required: Frame Width (in) 18.00 Head	18.00 Jamb	24.00 Head	24.00 Jamb	30.00 Head	30.00 Jamb	36.00 Head	36.00 Jamb	42.00 Head	42.00 Jamb	48.00 Head	48.00 Jamb	52.00 Head	52.00 Jamb
24.00	3	3	3	3	4	3	4	3	5	3	5	3	6	3
30.00	3	4	3	4	4	4	4	4	5	4	5	4	6	4
36.00	3	4	3	4	4	4	4	4	5	4	5	4	6	4
42.00	3	5	3	5	4	5	4	5	5	5	5	5	6	5
48.00	3	5	3	5	4	5	4	5	6	5	5	5	6	5
54.00	3	6	3	6	4	6	4	6	5	6	5	6	6	6
60.00	3	7	3	7	4	7	4	7	5	7	5	7	6	7
66.00	3	7	3	7	4	7	4	7	5	7	5	7	6	7
72.00	3	8	3	8	4	8	4	8	5	8	5	8	6	8

CHART #2

Frame Height (in)	Number of anchor locations required: Frame Width (in) 18.00 H & S	18.00 Jamb	24.00 H & S	24.00 Jamb	30.00 H & S	30.00 Jamb	36.00 H & S	36.00 Jamb	42.00 H & S	42.00 Jamb	48.00 H & S	48.00 Jamb	52.00 H & S	52.00 Jamb
24.00	3	3	3	3	4	3	5	3	5	3	6	3	6	3
30.00	3	4	3	4	4	4	5	4	5	4	6	4	6	4
36.00	3	5	3	5	4	5	5	5	5	5	6	5	6	5
42.00	3	5	3	5	4	5	6	6	5	5	6	5	6	5
48.00	3	6	3	6	4	6	5	6	5	5	6	5	6	5
54.00	3	6	3	6	4	6	5	6	5	6	6	6	6	6
60.00	3	7	3	7	4	7	5	7	6	7	6	7	6	7
66.00	3	8	3	8	4	8	5	8	5	8	6	8	6	8
72.00	3	8	3	8	4	8	5	8	5	8	6	8	6	8

DESIGN PRESSURE RATING	IMPACT RATING
±55.0PSF	LARGE MISSILE IMPACT

MISSILE LEVEL D, WIND ZONE 3

HARDWARE SCHEDULE	
A.	(2) METAL SWEEP LOCK AT 8" FROM EACH END INTERIOR MEETING RAIL
B.	(2) BLOCK AND TACKLE BALANCE AT JAMBS

NOTES:
1. MAXIMUM SASH SIZE: 51" X 36".
2. MAXIMUM SASH D.L.O.: 47 5/8" X 32 1/2".
2. MAXIMUM FIXED D.L.O.: 49 3/8" X 32 1/2".

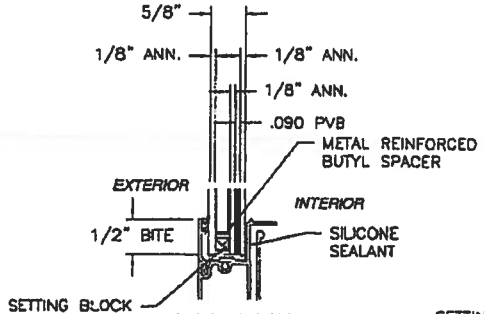

GLAZING DETAIL A

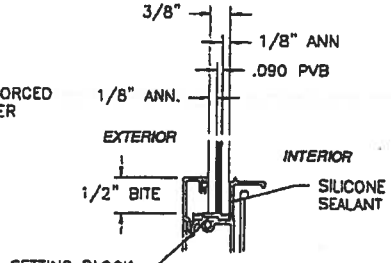

GLAZING DETAIL B

SIGNED: 12/17/2014

MI WINDOWS AND DOORS
650 WEST MARKET STREET
GRATZ, PA 17030-0370

SERIES 185 ALUMINUM SINGLE HUNG WINDOW
52"X72"- LMI
ELEVATIONS & GLASS OPTIONS

DRAWN:	DWG NO.	REV
N.G.	08-02544	-
SCALE: NTS	DATE: 12/09/14	SHEET: 2 OF 8

LUIS R. LOMAS LICENSE No. 52514 STATE OF FLORIDA PROFESSIONAL ENGINEER

REVISIONS			
REV	DESCRIPTION	DATE	APPROVED

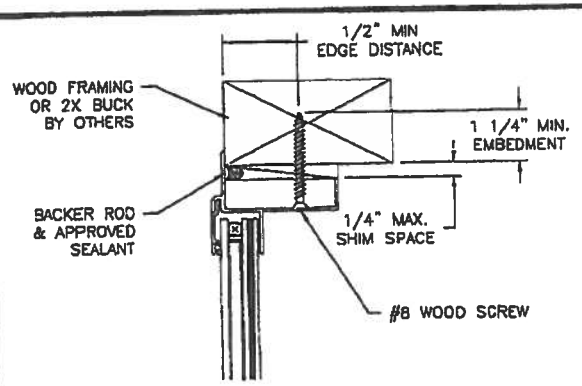

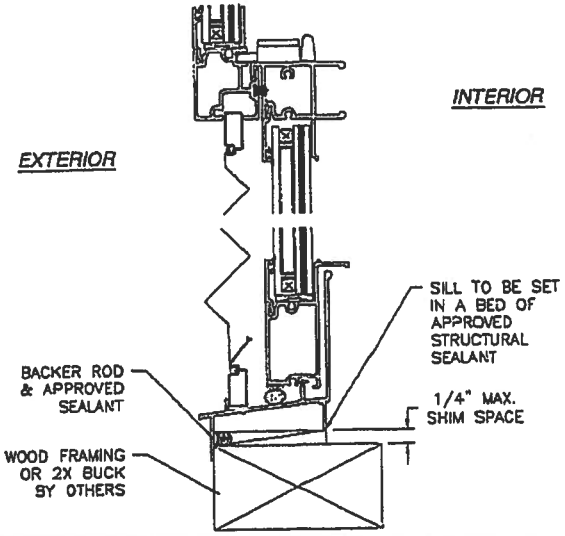

VERTICAL CROSS SECTION
WOOD FRAMING OR 2X BUCK INSTALLATION

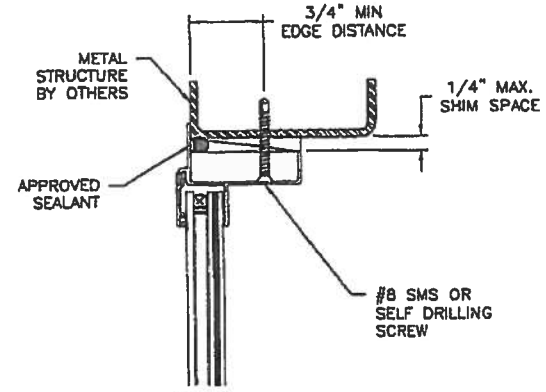

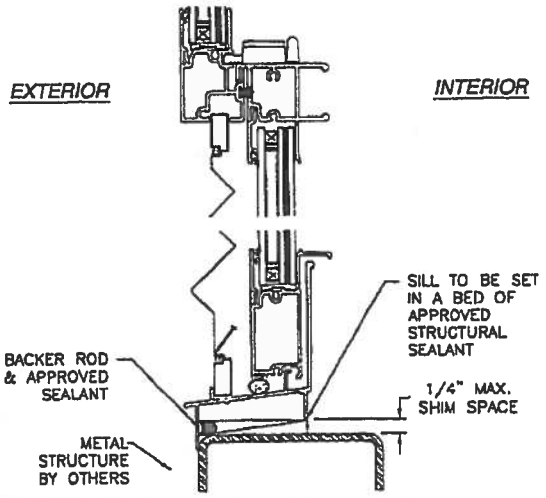

VERTICAL CROSS SECTION
METAL STRUCTURE INSTALLATION

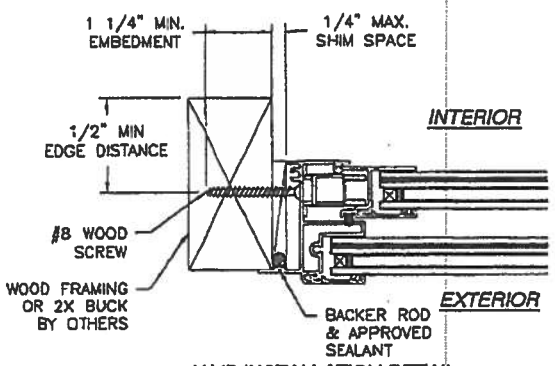

JAMB INSTALLATION DETAIL
WOOD FRAMING OR 2X BUCK INSTALLATION

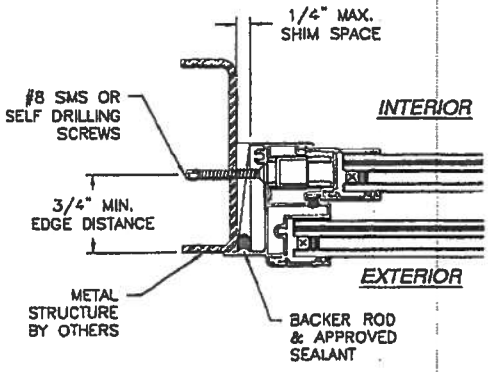

JAMB INSTALLATION DETAIL
METAL STRUCTURE INSTALLATION

SIGNED: 12/17/2014

NOTES:
1. INTERIOR AND EXTERIOR FINISHES, BY OTHERS, NOT SHOWN FOR CLARITY.
2. PERIMETER AND JOINT SEALANT BY OTHERS TO BE DESIGNED IN ACCORDANCE WITH ASTM E2112

MI WINDOWS AND DOORS
650 WEST MARKET STREET
GRATZ, PA 17030-0370

SERIES 185 ALUMINUM SINGLE HUNG WINDOW
52"X72"- LMI
FLANGE INSTALLATION DETAILS

DRAWN:	DWG NO.	REV
N.G.	08-02544	-
SCALE NTS	DATE 12/09/14	SHEET 3 OF 8

LUIS R. LOMAS
LICENSE
No. 62514
STATE OF
FLORIDA
PROFESSIONAL ENGINEER

REVISIONS			
REV	DESCRIPTION	DATE	APPROVED

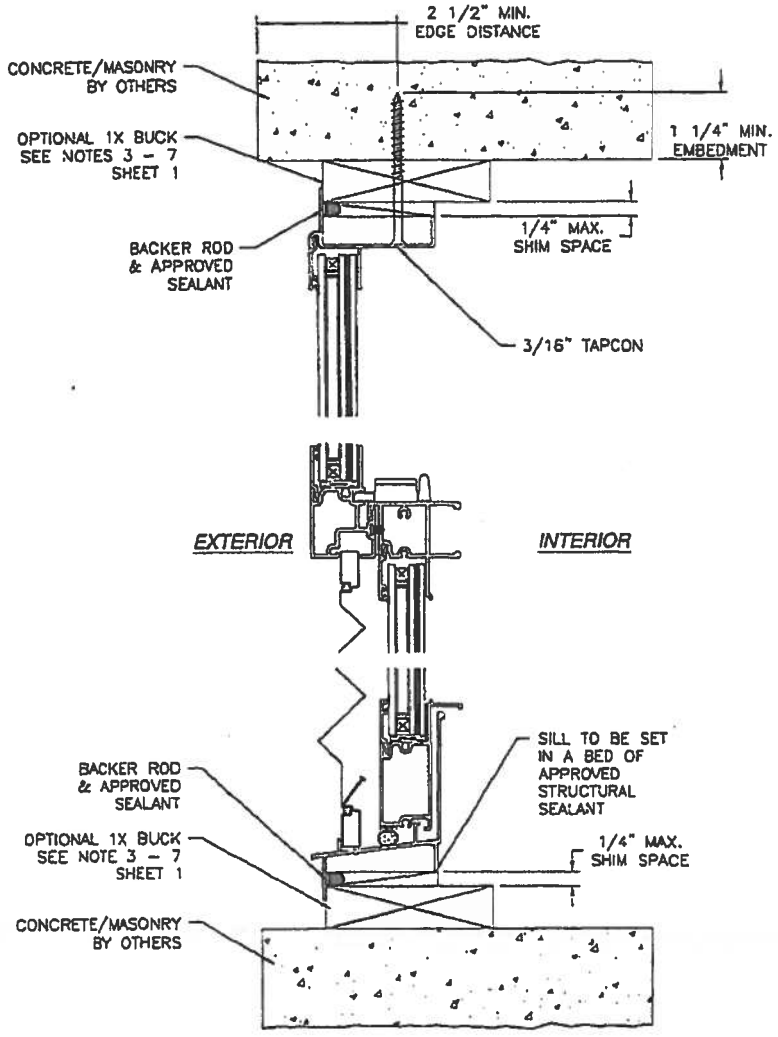

VERTICAL CROSS SECTION
CONCRETE/MASONRY INSTALLATION

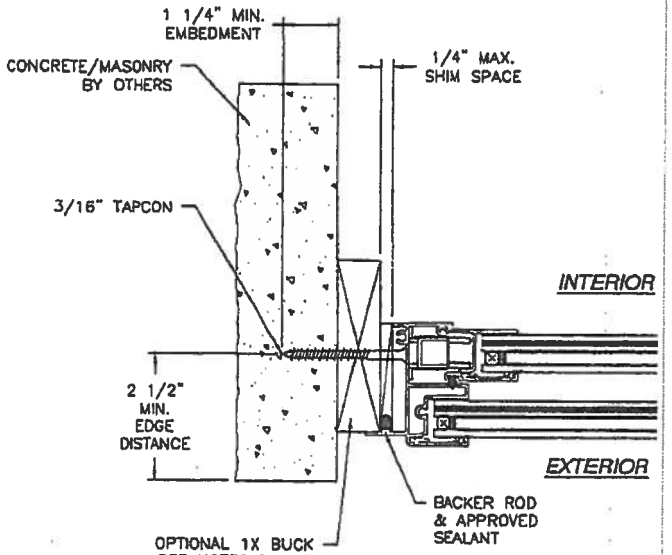

JAMB INSTALLATION DETAIL
CONCRETE/MASONRY INSTALLATION

NOTES:
1. INTERIOR AND EXTERIOR FINISHES, BY OTHERS, NOT SHOWN FOR CLARITY.
2. PERIMETER AND JOINT SEALANT BY OTHERS TO BE DESIGNED IN ACCORDANCE WITH ASTM E2112

SIGNED: 12/17/2014

MI WINDOWS AND DOORS
650 WEST MARKET STREET
GRATZ, PA 17030-0370

SERIES 185 ALUMINUM SINGLE HUNG WINDOW
52"X72"– LMI
FLANGE INSTALLATION DETAILS

DRAWN:	DWG NO.	REV
N.G.	08-02544	–
SCALE NTS	DATE 12/09/14	SHEET 4 OF 8

LUIS R. LOMAS
LICENSE
No. 6514
STATE OF
FLORIDA
PROFESSIONAL ENGINEER

REVISIONS			
REV	DESCRIPTION	DATE	APPROVED

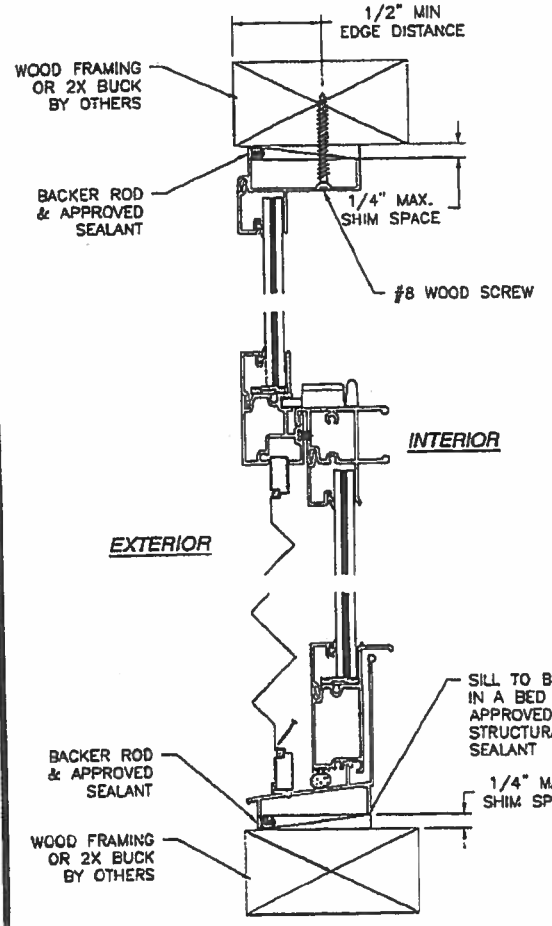

VERTICAL CROSS SECTION
WOOD FRAMING OR 2X BUCK INSTALLATION

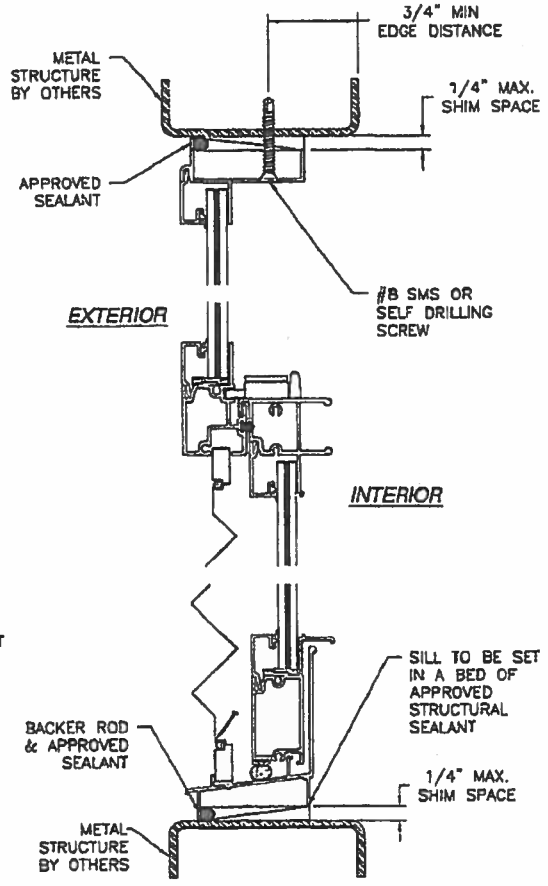

VERTICAL CROSS SECTION
METAL STRUCTURE INSTALLATION

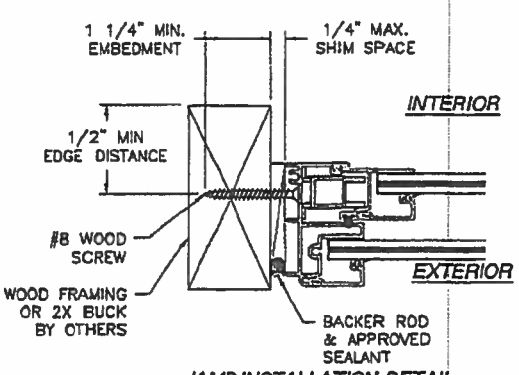

JAMB INSTALLATION DETAIL
WOOD FRAMING OR 2X BUCK INSTALLATION

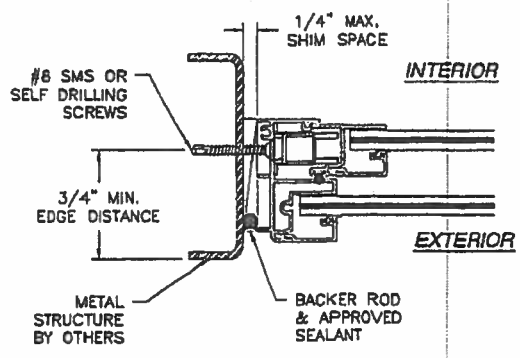

JAMB INSTALLATION DETAIL
METAL STRUCTURE INSTALLATION

SIGNED: 12/17/2014

NOTES:
1. INTERIOR AND EXTERIOR FINISHES, BY OTHERS, NOT SHOWN FOR CLARITY.
2. PERIMETER AND JOINT SEALANT BY OTHERS TO BE DESIGNED IN ACCORDANCE WITH ASTM E2112

MI WINDOWS AND DOORS
650 WEST MARKET STREET
GRATZ, PA 17030-0370

SERIES 185 ALUMINUM SINGLE HUNG WINDOW
52"X72"- LMI
FINLESS INSTALLATION DETAILS

DRAWN:	DWG NO.	REV
N.G.	08-02544	-
SCALE: NTS	DATE: 12/09/14	SHEET: 5 OF 8

LUIS R. LOMAS
LICENSE
No. 62514
STATE OF
FLORIDA
PROFESSIONAL ENGINEER

REVISIONS			
REV	DESCRIPTION	DATE	APPROVED

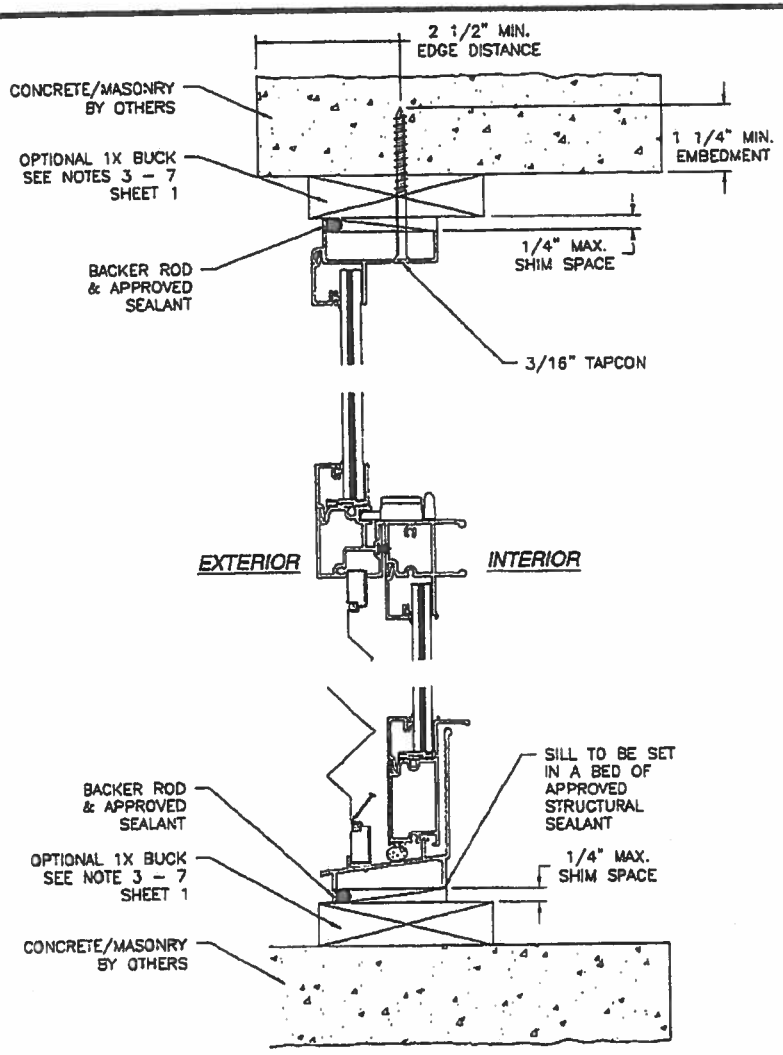

VERTICAL CROSS SECTION
CONCRETE/MASONRY INSTALLATION

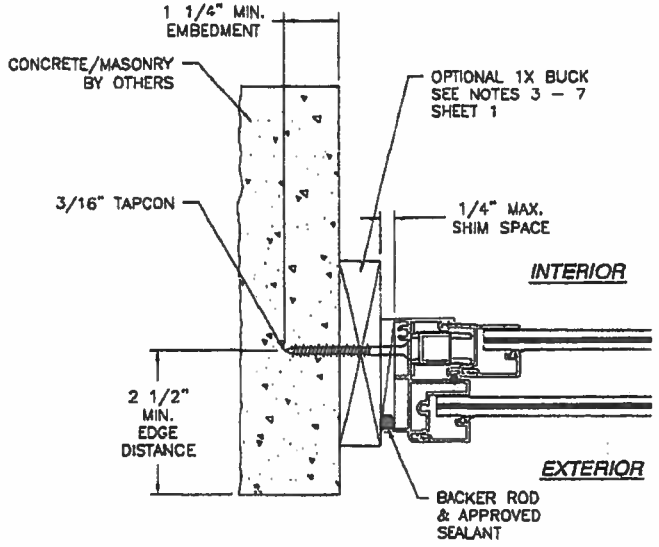

JAMB INSTALLATION DETAIL
CONCRETE/MASONRY INSTALLATION

NOTES:
1. INTERIOR AND EXTERIOR FINISHES, BY OTHERS, NOT SHOWN FOR CLARITY.
2. PERIMETER AND JOINT SEALANT BY OTHERS TO BE DESIGNED IN ACCORDANCE WITH ASTM E2112

SIGNED: 12/17/2014

MI WINDOWS AND DOORS
650 WEST MARKET STREET
GRATZ, PA 17030-0370

SERIES 185 ALUMINUM SINGLE HUNG WINDOW
52"X72"– LMI
FINLESS INSTALLATION DETAILS

DRAWN:	DWG NO.	REV
N.G.	08-02544	–
SCALE NTS	DATE 12/09/14	SHEET 6 OF 8

LUIS R. LOMAS
LICENSE
No. 52514
STATE OF
FLORIDA
PROFESSIONAL ENGINEER

REVISIONS			
REV	DESCRIPTION	DATE	APPROVED

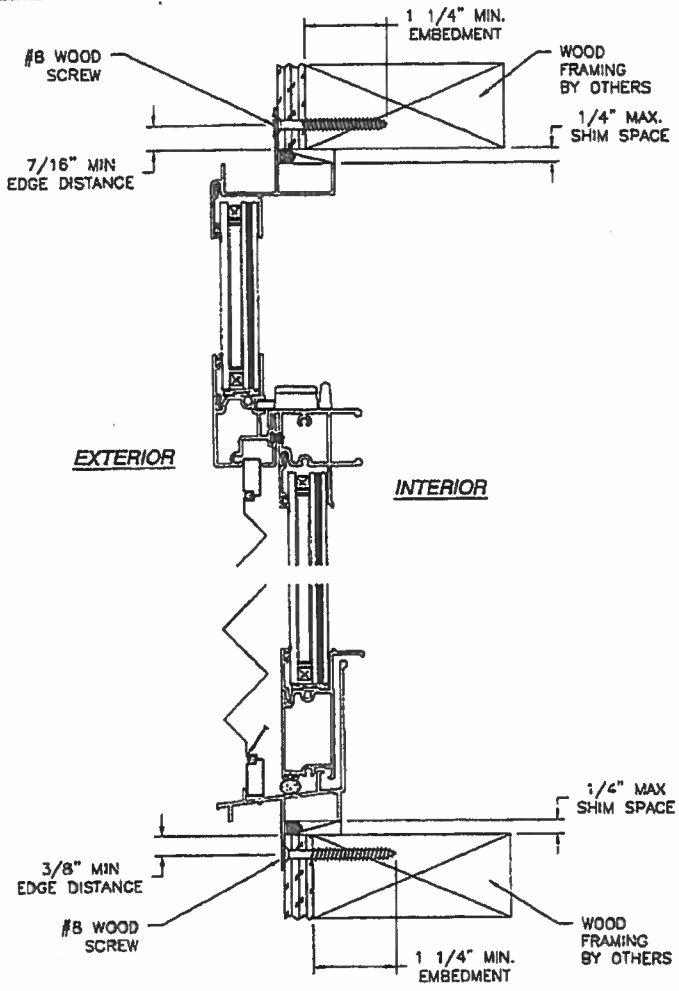

VERTICAL CROSS SECTION
WOOD FRAMING OR 2X BUCK INSTALLATION

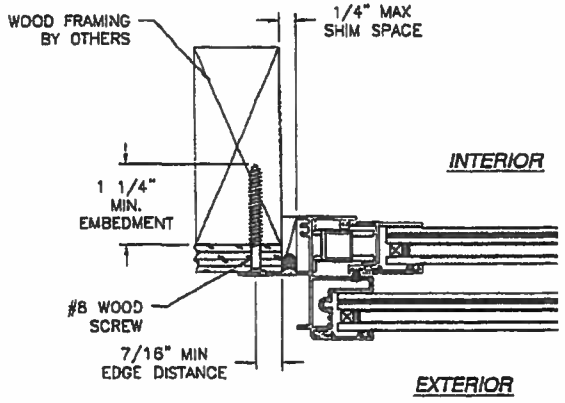

JAMB INSTALLATION DETAIL
WOOD FRAMING OR 2X BUCK INSTALLATION

NOTES:
1. INTERIOR AND EXTERIOR FINISHES, BY OTHERS, NOT SHOWN FOR CLARITY.
2. PERIMETER AND JOINT SEALANT BY OTHERS TO BE DESIGNED IN ACCORDANCE WITH ASTM E2112

SIGNED: 12/17/2014

MI WINDOWS AND DOORS
650 WEST MARKET STREET
GRATZ, PA 17030-0370

SERIES 185 ALUMINUM SINGLE HUNG WINDOW
52"X72"- LMI
FIN INSTALLATION DETAILS

DRAWN:	DWG NO.	REV
N.G.	08-02544	-
SCALE NTS	DATE 12/09/14	SHEET 7 OF 8

LUIS R. LOMAS
LICENSE
No. 63514
STATE OF
FLORIDA
PROFESSIONAL ENGINEER

PGT - Casement

MIAMI-DADE COUNTY

DEPARTMENT OF REGULATORY AND ECONOMIC RESOURCES (RER)
BOARD AND CODE ADMINISTRATION DIVISION

NOTICE OF ACCEPTANCE (NOA)

MIAMI-DADE COUNTY
PRODUCT CONTROL SECTION
11805 SW 26 Street, Room 208
T (786) 315-2590 F (786) 315-2599
www.miamidade.gov/economy

PGT Industries
1070 Technology Drive
North Venice, FL 34275

SCOPE:

This NOA is being issued under the applicable rules and regulations governing the use of construction materials. The documentation submitted has been reviewed and accepted by Miami-Dade County RER - Product Control Section to be used in Miami Dade County and other areas where allowed by the Authority Having Jurisdiction (AHJ).

This NOA shall not be valid after the expiration date stated below. The Miami–Dade County Product Control Section (In Miami–Dade County) and/or the AHJ (in areas other than Miami–Dade County) reserve the right to have this product or material tested for quality assurance purposes. If this product or material fails to perform in the accepted manner, the manufacturer will incur the expense of such testing and the AHJ may immediately revoke, modify, or suspend the use of such product or material within their jurisdiction. RER reserves the right to revoke this acceptance, if it is determined by Miami–Dade County Product Control Section that this product or material fails to meet the requirements of the applicable building code.

This product is approved as described herein, and has been designed to comply with the Florida Building Code, including the High Velocity Hurricane Zone.-

DESCRIPTION: Series "CA-740" Outswing Aluminum Casement Window - L.M.I.

APPROVAL DOCUMENT: Drawing No. **MD-CA740-LM**, titled "Casement Window Details - LM & SM", sheets 1 through 10 of 10, dated 08/08/12, with revision A dated 05/15/15, prepared by manufacturer, signed and sealed by Anthony Lynn Miller, P.E., bearing the Miami–Dade County Product Control Revision stamp with the Notice of Acceptance number and expiration date by the Miami–Dade County Product Control Section.

MISSILE IMPACT RATING: Large and Small Missile Impact Resistant

LABELING: Each unit shall bear a permanent label with the manufacturer's name or logo, city, state, model/series, and following statement: "Miami-Dade County Product Control Approved", unless otherwise noted herein.

RENEWAL of this NOA shall be considered after a renewal application has been filed and there has been no change in the applicable building code negatively affecting the performance of this product.

TERMINATION of this NOA will occur after the expiration date or if there has been a revision or change in the materials, use, and/or manufacture of the product or process. Misuse of this NOA as an endorsement of any product, for sales, advertising or any other purposes shall automatically terminate this NOA. Failure to comply with any section of this NOA shall be cause for termination and removal of NOA.

ADVERTISEMENT: The NOA number preceded by the words Miami-Dade County, Florida, and followed by the expiration date may be displayed in advertising literature. If any portion of the NOA is displayed, then it shall be done in its entirety.

INSPECTION: A copy of this entire NOA shall be provided to the user by the manufacturer or its distributors and shall be available for inspection at the job site at the request of the Building Official.

This NOA **revises NOA# 12-1218.09** and consists of this page 1 and evidence pages E-1 and E-2, as well as approval document mentioned above.

The submitted documentation was reviewed by **Manuel Perez, P.E.**

MIAMI-DADE COUNTY APPROVED

7/15/15

NOA No. 15-0519.13
Expiration Date: April 11, 2018
Approval Date: July 16 2015

GENERAL NOTES: SERIES 740 IMPACT-RESISTANT CASEMENT WINDOW

1) THIS PRODUCT HAS BEEN DESIGNED & TESTED TO COMPLY WITH THE REQUIREMENTS OF THE FLORIDA BUILDING CODE, INCLUDING THE HIGH VELOCITY HURRICANE ZONE (HVHZ).

2) SHUTTERS ARE NOT REQUIRED WHEN USED IN WIND-BORNE DEBRIS REGIONS. FOR INSULATED GLASS INSTALLATIONS ABOVE 30' IN THE HVHZ, THE OUTBOARD LITE (CAP) MUST TEMPERED.

3) FOR MASONRY APPLICATIONS IN MIAMI-DADE COUNTY, USE ONLY MIAMI-DADE COUNTY APPROVED MASONRY ANCHORS. MATERIALS USED FOR ANCHOR EVALUATIONS WERE SOUTHERN PINE, ASTM C90 CONCRETE MASONRY UNITS AND CONCRETE WITH MIN. KSI PER ANCHOR TYPE, SEE TABLE 3, SHEET 4.

4) ALL WOOD BUCKS LESS THAN 1-1/2" THICK ARE TO BE CONSIDERED 1X INSTALLATIONS. 1X WOOD BUCKS ARE OPTIONAL IF UNIT IS INSTALLED DIRECTLY TO SUBSTRATE. WOOD BUCKS DEPICTED AS 2X ARE 1-1/2" THICK OR GREATER. 1X AND 2X BUCKS (WHEN USED) SHALL BE DESIGNED TO PROPERLY TRANSFER LOADS TO THE STRUCTURE. WOOD BUCK DESIGN AND INSTALLATION IS THE RESPONSIBILITY OF THE ENGINEER OR ARCHITECT OF RECORD.

5) ANCHOR EMBEDMENT TO BASE MATERIAL SHALL BE BEYOND WALL DRESSING OR STUCCO. USE ANCHORS OF SUFFICIENT EMBEDMENT AS SPECIFIED ON TABLE 3, SHEET 4. NARROW JOINT SEALANT IS USED ON ALL FOUR CORNERS OF THE FRAME. INSTALLATION ANCHORS SHOULD BE SEALED. OVERALL SEALING/FLASHING STRATEGY FOR WATER RESISTANCE OF INSTALLATION SHALL BE DONE BY OTHERS AND IS BEYOND THE SCOPE OF THESE INSTRUCTIONS.

6) SHIMS ARE REQUIRED AT EACH ANCHOR LOCATION WHERE THE PRODUCT IS NOT FLUSH TO THE SUBSTRATE. USE SHIMS CAPABLE OF TRANSFERRING APPLIED LOADS. WOOD BUCKS, BY OTHERS, MUST BE SUFFICIENTLY ANCHORED TO RESIST LOADS IMPOSED ON THEM BY THE WINDOW.

7) DESIGN PRESSURES:
A. NEGATIVE DESIGN LOADS BASED ON STRUCTURAL/CYCLE TEST PRESSURE, FRAME ANALYSIS AND GLASS PER ASTM E1300.
B. POSITIVE DESIGN LOADS BASED ON WATER TEST PRESSURE, STRUCTURAL/ CYCLE TEST PRESSURE, FRAME ANALYSIS AND GLASS PER ASTM E1300.

8) THE ANCHORAGE METHODS SHOWN HAVE BEEN DESIGNED TO RESIST THE WINDLOADS CORRESPONDING TO THE REQUIRED DESIGN PRESSURE. THE 33-1/3% STRESS INCREASE HAS NOT BEEN USED IN THE DESIGN OF THIS PRODUCT. THE 1.6 LOAD DURATION FACTOR WAS USED FOR THE EVALUATION OF ANCHORS INTO WOOD. ANCHORS THAT COME INTO CONTACT WITH OTHER DISSIMILAR MATERIALS SHALL MEET THE REQUIREMENTS OF THE FLORIDA BUILDING CODE FOR CORROSION RESISTANCE.

9) REFERENCES: TEST REPORTS FTL-7065, 3579, 3580, 3724; ELCO ULTRACON NOA; ELCO CRETEFLEX NOA; ANSI/AF&PA NDS FOR WOOD CONSTRUCTION AND ADM ALUMINUM DESIGN MANUAL.

DESIGN PRESSURE RATING	IMPACT RATING
VARIES, SEE SHEETS 8-9	RATED FOR LARGE & SMALL MISSILE IMPACT RESISTANCE

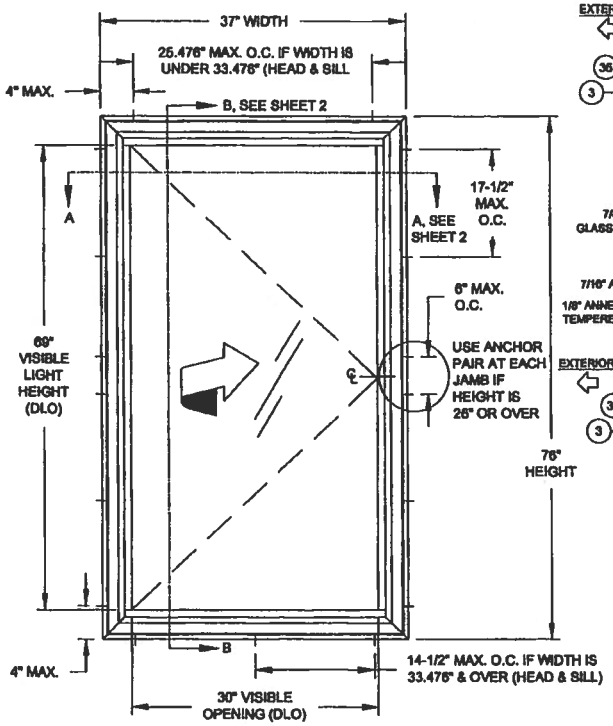

TYP. ELEVATION OF CASEMENT WINDOW

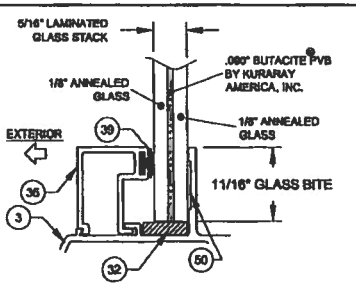

GLASS TYPE 1

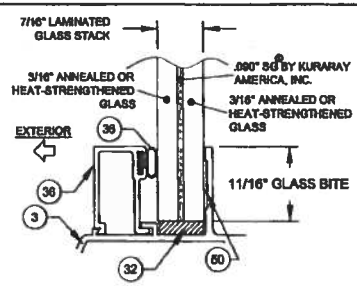

GLASS TYPES 2 & 3

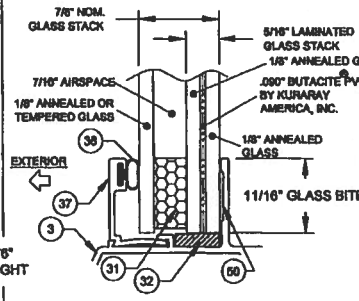

GLASS TYPES 4 & 5

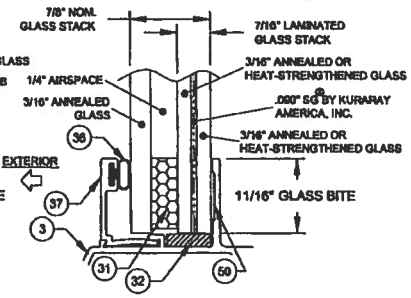

GLASS TYPES 6 & 7

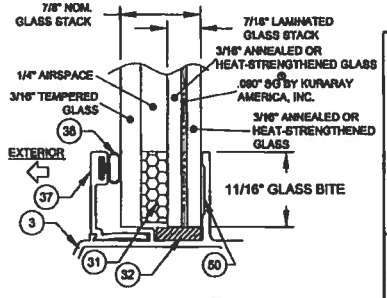

GLASS TYPES 8 & 9

TABLE 1:

	Glass Types	Sheet #
1	5/16" LamI (1/8 An - .090" PVB - 1/8 An)	5
2	7/16" LamI (3/16 An - .090" SG - 3/16 An)	6
3	7/16" LamI (3/16 HS - .090" SG - 3/16 HS)	7
4	7/8" Lami. IG (1/8" An - 7/16" Air - 1/8" An - .090" PVB - 1/8" An)	5
5	7/8" Lami. IG (1/8" T - 7/16" Air - 1/8" An - .090" PVB - 1/8" An)	8
6	7/8" Lami. IG (3/16" An - 1/4" Air - 3/16" An - .090" SG - 3/16" An)	9
7	7/8" Lami. IG (3/16" An - 1/4" Air - 3/16" HS - .090" SG - 3/16" HS)	7
8	7/8" Lami. IG (3/16" T - 1/4" Air - 3/16" An - .090" SG - 3/16" An)	9
9	7/8" Lami. IG (3/16" T - 1/4" Air - 3/16" HS - .090" SG - 3/16" HS)	7

"PVB"= BUTACITE® PVB BY KURARAY AMERICA, INC.
"SG"= SENTRYGLAS® BY KURARAY AMERICA, INC.

GENERAL NOTES..... 1
ELEVATION..... 1
GLAZING DETAILS..... 1
INSTALLATION..... 2
ASSEMBLY TUBE DETAILS..... 3
ANCHOR SPECIFICATIONS..... 4
ANCHOR QUANTITIES..... 4
DESIGN PRESSURES..... 5-9
ASSEMBLY DETAILS/BOM..... 10

ANTHONY LYNN MILLER LICENSE No. 58705 STATE OF FLORIDA PROFESSIONAL ENGINEER
A. LYNN MILLER, P.E.
P.E.# 58705

PRODUCT REVISED as complying with the Florida Building Code
Acceptance No. 15-0519.13
Expiration Date April 11, 2018
By Miami Dade Product Control

PGT®
1070 TECHNOLOGY DRIVE
N. VENICE, FL 34275
P.O. BOX 1529
NOKOMIS, FL 34274
CERT OF AUTH. #29296

Revised By:	Date:	Revision B:
Revised By: LM	Date: 5/15/15	Revision A: 5TH EDITION (2014) FBC UPDATE

Description:	Drawn By:
GLAZING DETAILS	J ROSOWSKI

Title:	Date:
CASEMENT WINDOW DETAILS - LM & SM	08/08/12

Series/Model:	Scale:	Sheet:	Drawing No.	Rev:
CA-740	NTS	1 OF 10	MD-CA740-LM	A

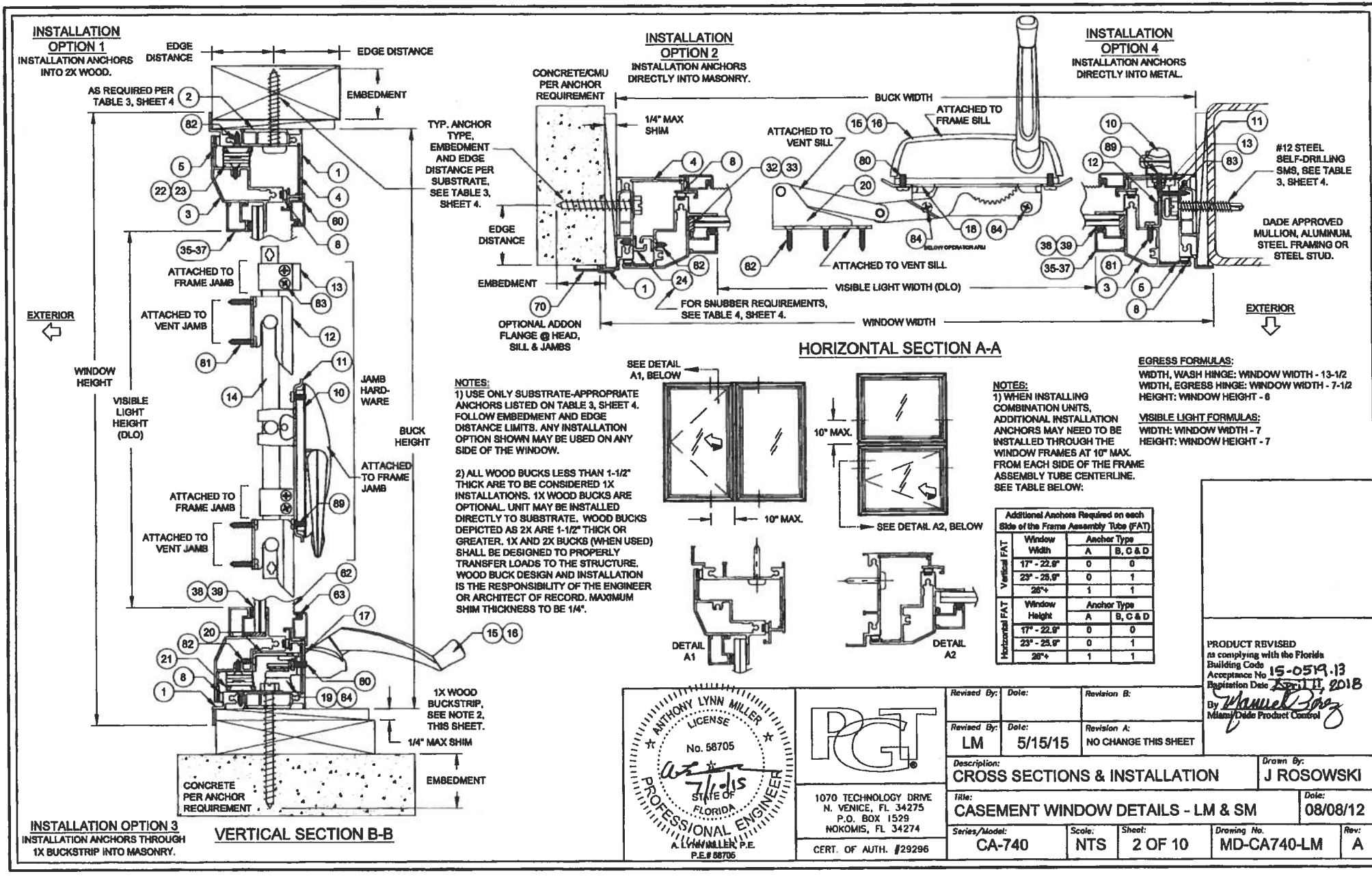

NOTES:
1) USE ONLY SUBSTRATE-APPROPRIATE ANCHORS LISTED ON TABLE 3, SHEET 4. FOLLOW EMBEDMENT AND EDGE DISTANCE LIMITS. ANY INSTALLATION OPTION SHOWN MAY BE USED ON ANY SIDE OF THE WINDOW.

2) ALL WOOD BUCKS LESS THAN 1-1/2" THICK ARE TO BE CONSIDERED 1X INSTALLATIONS. 1X WOOD BUCKS ARE OPTIONAL. UNIT MAY BE INSTALLED DIRECTLY TO SUBSTRATE. WOOD BUCKS DEPICTED AS 2X ARE 1-1/2" THICK OR GREATER. 1X AND 2X BUCKS (WHEN USED) SHALL BE DESIGNED TO PROPERLY TRANSFER LOADS TO THE STRUCTURE. WOOD BUCK DESIGN AND INSTALLATION IS THE RESPONSIBILITY OF THE ENGINEER OR ARCHITECT OF RECORD. MAXIMUM SHIM THICKNESS TO BE 1/4".

NOTES:
1) WHEN INSTALLING COMBINATION UNITS, ADDITIONAL INSTALLATION ANCHORS MAY NEED TO BE INSTALLED THROUGH THE WINDOW FRAMES AT 10" MAX. FROM EACH SIDE OF THE FRAME ASSEMBLY TUBE CENTERLINE. SEE TABLE BELOW:

Additional Anchors Required on each Side of the Frame Assembly Tube (FAT)

	Window Width	Anchor Type A	Anchor Type B, C & D
Vertical FAT	17" - 22.9"	0	0
	23" - 25.9"	0	1
	26"+	1	1
	Window Height	Anchor Type A	Anchor Type B, C & D
Horizontal FAT	17" - 22.9"	0	0
	23" - 25.9"	0	1
	26"+	1	1

EGRESS FORMULAS:
WIDTH, WASH HINGE: WINDOW WIDTH - 13-1/2
WIDTH, EGRESS HINGE: WINDOW WIDTH - 7-1/2
HEIGHT: WINDOW HEIGHT - 6

VISIBLE LIGHT FORMULAS:
WIDTH: WINDOW WIDTH - 7
HEIGHT: WINDOW HEIGHT - 7

PRODUCT REVISED as complying with the Florida Building Code
Acceptance No 15-0519.13
Expiration Date April 11, 2018
By Miami-Dade Product Control

ANTHONY LYNN MILLER LICENSE No. 58705 STATE OF FLORIDA PROFESSIONAL ENGINEER
7/10/15
A. LYNN MILLER, P.E.
P.E.# 58705

PGT
1070 TECHNOLOGY DRIVE
N. VENICE, FL 34275
P.O. BOX 1529
NOKOMIS, FL 34274
CERT. OF AUTH. #29296

Revised By:	Date:	Revision B:
Revised By: LM	Date: 5/15/15	Revision A: NO CHANGE THIS SHEET

Description: CROSS SECTIONS & INSTALLATION
Drawn By: J ROSOWSKI
Title: CASEMENT WINDOW DETAILS - LM & SM
Date: 08/08/12
Series/Model: CA-740
Scale: NTS
Sheet: 2 OF 10
Drawing No. MD-CA740-LM
Rev: A

CASEMENT (X)

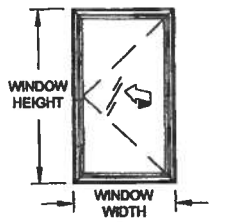

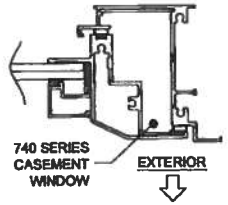

FOR SINGLE UNITS:

1) DETERMINE YOUR WINDOW SIZE AND GLASS.

2) KNOWING YOUR ANCHOR TYPE AND SUBSTRATE, DETERMINE YOUR ANCHOR GROUP FROM TABLE 3, SHEET 4.

3) FROM SHEETS 5-9, FIND THE SHEET FOR YOUR GLASS TYPE. FIND THE PRODUCT'S DESIGN PRESSURE FROM THE TABLE LABELED *"DESIGN PRESSURE (PSF) FOR SINGLE WINDOWS, ALL ANCHOR GROUPS"*.

4) DIMENSIONS SHOWN ARE TIP-TO-TIP. FOR SIZES NOT SHOWN, ROUND UP TO THE NEXT AVAILABLE WIDTH OR HEIGHT DIMENSION SHOWN ON THE TABLES.

5) USING THE TABLE LABELED *"WINDOW ANCHORS REQUIRED"* (TABLE 2, SHEET 4), DETERMINE THE NUMBER OF ANCHORS NEEDED IN THE HEAD, SILL AND JAMBS OF YOUR WINDOW.

6) INSTALL AS PER THE INSTRUCTIONS ON SHEET 2.

CASEMENT / CASEMENT (XX)

FIGURE 1:

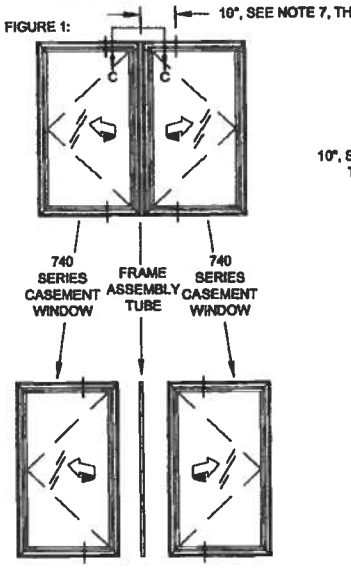

HORIZONTAL SECTION C-C

AWNING / CASEMENT / FIXED CASEMENT (XXO)

FIGURE 2:

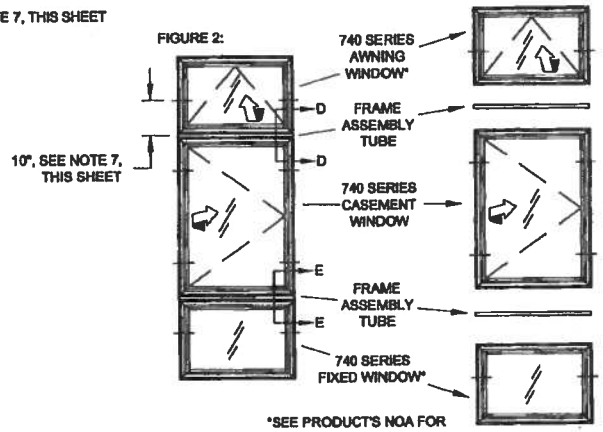

*SEE PRODUCT'S NOA FOR INSTALLATION SPECS

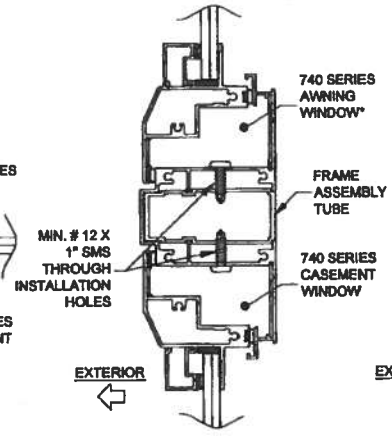

VERTICAL SECTION D-D

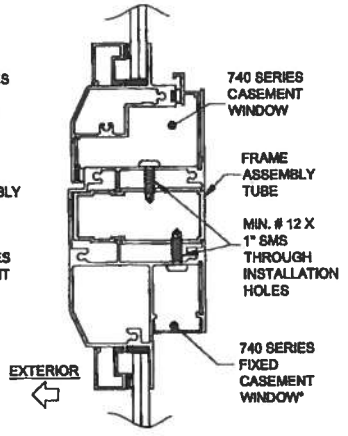

VERTICAL SECTION E-E

FOR EACH WINDOW IN A VERTICALLY OR HORIZONTALLY COMBINED ASSEMBLY:

1) DETERMINE EACH INDIVIDUAL WINDOW TYPE, SIZE AND GLASS MAKEUP, SEE FIGURES 1 & 2, THIS SHEET. DETERMINE YOUR ANCHOR GROUP FROM TABLE 3, SHEET 4.

2) FROM SHEETS 5-9, FIND THE SHEET FOR YOUR GLASS TYPE.

3) FIND THE DESIGN PRESSURE FROM THE TABLES LABELED *"DESIGN PRESSURE (PSF) FOR WINDOWS ATTACHED TO A VERTICAL FRAME ASSEMBLY TUBE"* OR *"DESIGN PRESSURE (PSF) FOR WINDOWS ATTACHED TO A HORIZONTAL FRAME ASSEMBLY TUBE"*, DEPENDING ON WHICH WAY THE FRAME ASSEMBLY TUBE IS ORIENTATED. THIS MUST BE DONE FOR EACH WINDOW IN THE ASSEMBLY, AND THE LOWEST DESIGN PRESSURE APPLIES TO THE ENTIRE ASSEMBLY. DIMENSIONS SHOWN ARE TIP-TO-TIP. FOR SIZES NOT SHOWN, ROUND UP TO THE NEXT AVAILABLE WIDTH OR HEIGHT DIMENSION SHOWN ON THE TABLES.

4) USING THE TABLE LABELED *"WINDOW ANCHORS REQUIRED"* (TABLE 2, SHEET 4), DETERMINE THE NUMBER OF ANCHORS NEEDED IN THE HEAD, SILL AND JAMBS OF YOUR WINDOW.

5) INSTALL AS PER THE INSTRUCTIONS ON SHEETS 2-3. NOTE THAT ADDITIONAL ANCHORS THROUGH THE WINDOW FRAME INTO THE SUBSTRATE MAY BE REQUIRED (SEE SHEET 2), AND THAT MIN. #12 X 1" ANCHORS ARE TO BE USED THROUGH THE FRAME INTO THE FRAME ASSEMBLY TUBE (SEE DETAILS ON THIS SHEET).

FRAME ASSEMBLY TUBE NOTES:

1) DIMENSIONS SHOWN ARE TIP-TO-TIP DIMENSIONS FOR EACH INDIVIDUAL WINDOW. FOR SIZES NOT SHOWN, ROUND UP TO THE NEXT AVAILABLE WIDTH OR HEIGHT DIMENSION SHOWN ON THE TABLES.

2) ANY 740-SERIES PRODUCT (CASEMENT, AWNING OR FIXED CASEMENT) MAY BE ATTACHED TO THE FRAME ASSEMBLY TUBE. FOR ALL WINDOWS, USE THE WINDOW'S NOA FOR ANCHORAGE, SIZE AND DESIGN PRESSURE LIMITATIONS.

3) ALL WINDOWS IN THE COMBINATION UNIT MUST BE ABLE TO INDIVIDUALLY COMPLY WITH THE REQUIREMENTS OF THEIR RESPECTIVE NOA.

4) FRAME ASSEMBLY TUBE TO BE FASTENED TO WINDOW, AS SHOW IN DETAILS, WITH MIN. #12 X 1" SHEET METAL SCREWS. USE THE SAME SPACING AND QUANTITY AS THE OPPOSITE FRAME MEMBER.

5) THE FRAME ASSEMBLY TUBE MAY NOT EXCEED 62" IN LENGTH (AS USED IN A 63" FLANGED WINDOW) OR BE USED IN TEE OR CROSS CONFIGURATIONS.

6) THE FRAME ASSEMBLY TUBE IS NOT REQUIRED TO BE CLIPPED TO THE SUBSTRATE. ALL EXTERIOR JOINTS TO BE SEALED BY INSTALLER.

7) FOR ALL COMBINATION UNITS, ADDITIONAL INSTALLATION ANCHORS MAY NEED TO BE INSTALLED THROUGH THE WINDOW FRAMES AT 10" MAX. FROM EACH SIDE OF THE FRAME ASSEMBLY TUBE CENTERLINE. SEE TABLE BELOW:

Additional Anchors Required on each Side of the Frame Assembly Tube (FAT)			
Vertical FAT	Window Width	Anchor Type	
		A	B, C & D
	17" - 22.9"	0	0
	23" - 25.9"	0	1
	26"+	1	1
Horizontal FAT	Window Height	Anchor Type	
		A	B, C & D
	17" - 22.9"	0	0
	23" - 25.9"	0	1
	26"+	1	1

PRODUCT REVISED as complying with the Florida Building Code Acceptance No 15-0519.13 Expiration Date April 11, 2018 By Manuel Perez Miami Dade Product Control

Revised By:	Date:	Revision #:	Rev:
L MILLER	5/15/15	NO CHANGE THIS SHEET	A
Drawn By:	Date:		
J ROSOWSKI	08/08/12		

Description: FRAME ASSEMBLY TUBE DETAILS

Title: CASEMENT WINDOW DETAILS - LM & SM

Series/Model: CA-740 | Scale: NTS | Sheet: 3 OF 10 | Drawing No.: MD-CA740-LM

1070 TECHNOLOGY DRIVE
N. VENICE, FL 34275
P.O. BOX 1529
NOKOMIS, FL 34274
CERT. OF AUTH. #29296

ANTHONY LYNN MILLER LICENSE No. 58705 STATE OF FLORIDA PROFESSIONAL ENGINEER
A. LYNN MILLER, P.E.
P.E.# 58705

□hillip A. Staley
Robert □. Martin
915 N □ Street
Lake Worth, Florida 33460
619-246-3716/619-888-6031

31 March, 2016

To Whom It May Concern,

I and my □usband, Robert, purchased our home at 915 N □ Street in □uly of 2015. We relocated to the □alm Beach area in early 2015 from San Diego, Ca due to a work transfer. We expressly looked in the Lake Worth area for an older home with character similar to our former San Diego home. We were so very happy to find and purchase our home at 915 N □ Street.

We have decided to start the upgrade of our home with new hurricane proof windows and doors. We have chosen windows and doors to match the existing windows to maintain the charm and feel we fell in love with.

We decided on the windows first for a few reason.

1. We wanted □urricane □roof windows and Doors to protect our new home in the case of future storms to the □alm Beach area which are unpredictable.
2. Energy Efficiency as to save on our air conditioning and heating bills. We noticed almost immediately upon moving in of how much the Florida sun heats up our home, especially from the single pain windows that are currently installed. Currently during the summer, it□s almost impossible to maintain a cool temp in our bedrooms due to the sun and heat coming thru the windows.
3. The windows installed have never been updated or repaired thru the years. The moldings and windows and frames are rotting through age and termite damage as well. Even before we moved into the home, the former owner had to repair some of the windows at our request due to age and termite damage.
4. Security of our home is very much impacted from the deterioration of the windows. Latches on the windows are very fragile and a few have broken completely due to the woods weather damaged.
5. Most of our windows are painted shut after many years of layers of paint. They are unable to be opened up at all without the possibility of

them being broken. During the home inspection, the inspector tried to open one and shattered the window.

We have decided to match the current windows as to not change the look of our home. They are white vertical windows that offer us and our home the look a feel of the original. Our contractor has informed us that he will save as much of the trim as he can to maintain the current look of the windows.

We Love our □ome and we are very house proud. We have thought of only ways to improve our □ome without changing the original character. We look forward to doing more home improvements to update its safety, security, energy efficiency and looks while maintaining the charm we fell in Love with when we first laid eyes upon it.

We look forward to working with Lake Worth □istorical Society to make sure that charm of our home is maintained and within our surrounding our area.

Sincerely,

□hillip A. Staley

Robert □. Martin

U.S. Department of the Interior
National Park Service
Cultural Resources

Heritage Preservation Services

Preservation Briefs: 9

The Repair of Historic Wooden Windows

John H. Myers

The windows on many historic buildings are an important aspect of the architectural character of those buildings. Their design, craftsmanship, or other qualities may make them worthy of preservation. This is self-evident for ornamental windows, but it can be equally true for warehouses or factories where the windows may be the most dominant visual element of an otherwise plain building (see figure 1). Evaluating the significance of these windows and planning for their repair or replacement can be a complex process involving both objective and subjective considerations. The *Secretary of the Interior's Standards for Rehabilitation*, and the accompanying guidelines, call for respecting the significance of original materials and features, repairing and retaining them wherever possible, and when necessary, replacing them in kind. This **Brief** is based on the issues of significance and repair which are implicit in the standards, but the primary emphasis is on the technical issues of planning for the repair of windows including evaluation of their physical condition, techniques of repair, and design considerations when replacement is necessary.

Figure 1. *Windows are frequently important visual focal points, especially on simple facades such as this mill building. Replacement of the multi-pane windows here with larger panes could dramatically change the appearance of the building. The areas of missing windows convey the impression of such a change. Photo: John T. Lowe*

Much of the technical section presents repair techniques as an instructional guide for the do-it-yourselfer. The information will be useful, however, for the architect, contractor, or developer on large-scale projects. It presents a methodology for approaching the evaluation and repair of existing windows, and considerations for replacement, from which the professional can develop alternatives and specify appropriate materials and procedures.

Architectural or Historical Significance

Evaluating the architectural or historical significance of windows is the first step in planning for window treatments, and a general understanding of the function and history of windows is vital to making a proper evaluation. As a part of this evaluation, one must consider four basic window functions: admitting light to the interior spaces, providing fresh air and ventilation to the interior, providing a visual link to the outside world, and enhancing the appearance of a building. No single factor can be disregarded when planning window treatments; for example, attempting to conserve energy by closing up or reducing the size of window openings may result in the use of *more* energy by increasing electric lighting loads and decreasing passive solar heat gains.

Historically, the first windows in early American houses were casement windows; that is, they were hinged at the side and opened outward. In the beginning of the eighteenth century single- and double-hung windows were introduced. Subsequently many styles of these vertical sliding sash windows have come to be associated with specific building periods or architectural styles, and this is an important consideration in determining the significance of windows, especially on a local or regional basis. Site-specific, regionally oriented architectural comparisons should be made to determine the significance of windows in question. Although such comparisons may focus on specific window types and their details, the ultimate determination of significance should be made within the context of the whole building, wherein the windows are one architectural element (see figure 2).

After all of the factors have been evaluated, *windows should be considered significant to a building if they:* 1) are original, 2) reflect the original design intent for the building, 3) reflect period or regional styles or building practices, 4) reflect changes to the building resulting from major periods or events, or 5) are examples of exceptional craftsmanship or design. Once this evaluation of significance has been completed, it is possible to pro-

For sale by the Superintendent of Documents, U.S. Government Printing Office, Washington, D.C. 20402

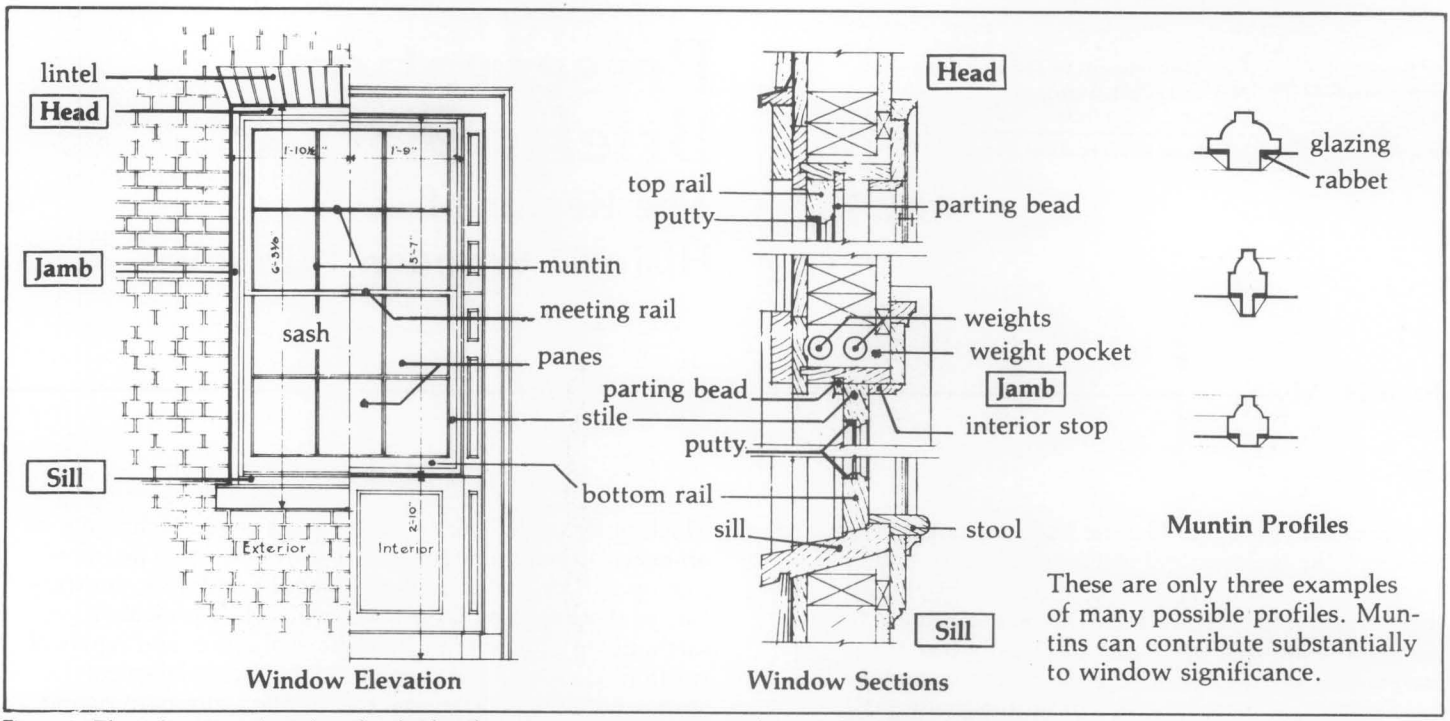

Figure 2. *These drawings of window details identify major components, terminology, and installation details for a wooden double-hung window.*

ceed with planning appropriate treatments, beginning with an investigation of the physical condition of the windows.

Physical Evaluation

The key to successful planning for window treatments is a careful evaluation of existing physical conditions on a unit-by-unit basis. A graphic or photographic system may be devised to record existing conditions and illustrate the scope of any necessary repairs. Another effective tool is a window schedule which lists all of the parts of each window unit. Spaces by each part allow notes on existing conditions and repair instructions. When such a schedule is completed, it indicates the precise tasks to be performed in the repair of each unit and becomes a part of the specifications. In any evaluation, one should note at a minimum, 1) window location, 2) condition of the paint, 3) condition of the frame and sill, 4) condition of the sash (rails, stiles and muntins), 5) glazing problems, 6) hardware, and 7) the overall condition of the window (excellent, fair, poor, and so forth).

Many factors such as poor design, moisture, vandalism, insect attack, and lack of maintenance can contribute to window deterioration, but moisture is the primary contributing factor in wooden window decay. All window units should be inspected to see if water is entering around the edges of the frame and, if so, the joints or seams should be caulked to eliminate this danger. The glazing putty should be checked for cracked, loose, or missing sections which allow water to saturate the wood, especially at the joints. The back putty on the interior side of the pane should also be inspected, because it creates a seal which prevents condensation from running down into the joinery. The sill should be examined to insure that it slopes downward away from the building and allows water to drain off. In addition, it may be advisable to cut a dripline along the underside of the sill. This almost invisible treatment will insure proper water run-off, particularly if the bottom of the sill is flat. Any conditions, including poor original design, which permit water to come in contact with the wood or to puddle on the sill must be corrected as they contribute to deterioration of the window.

One clue to the location of areas of excessive moisture is the condition of the paint; therefore, each window should be examined for areas of paint failure. Since excessive moisture is detrimental to the paint bond, areas of paint blistering, cracking, flaking, and peeling usually identify points of water penetration, moisture saturation, and potential deterioration. Failure of the paint should not, however, be mistakenly interpreted as a sign that the wood is in poor condition and hence, irreparable. Wood is frequently in sound physical condition beneath unsightly paint. After noting areas of paint failure, the next step is to inspect the condition of the wood, particularly at the points identified during the paint examination.

Each window should be examined for operational soundness beginning with the lower portions of the frame and sash. Exterior rainwater and interior condensation can flow downward along the window, entering and collecting at points where the flow is blocked. The sill, joints between the sill and jamb, corners of the bottom rails and muntin joints are typical points where water collects and deterioration begins (see figure 3). The operation of the window (continuous opening and closing over the years and seasonal temperature changes) weakens the joints, causing movement and slight separation. This process makes the joints more vulnerable to water which is readily absorbed into the end-grain of the wood. If severe deterioration exists in these areas, it will usually be apparent on visual inspection, but other less severely deteriorated areas of the wood may be tested by two traditional methods using a small ice pick.

An ice pick or an awl may be used to test wood for soundness. The technique is simply to jab the pick into a wetted wood surface at an angle and pry up a small sec-

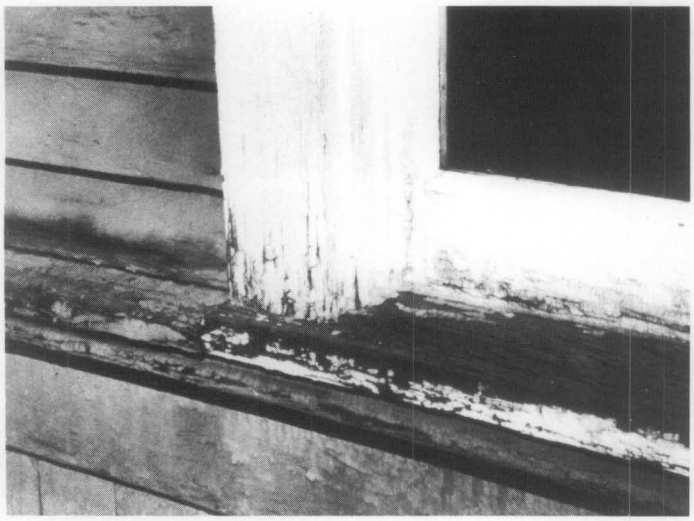

Figure 3. *Deterioration of poorly maintained windows usually begins on horizontal surfaces and at joints where water can collect and saturate the wood. The problem areas are clearly indicated by paint failure due to moisture. Photo: Baird M. Smith, AIA*

tion of the wood. Sound wood will separate in long fibrous splinters, but decayed wood will lift up in short irregular pieces due to the breakdown of fiber strength.

Another method of testing for soundness consists of pushing a sharp object into the wood, perpendicular to the surface. If deterioration has begun from the hidden side of a member and the core is badly decayed, the visible surface may appear to be sound wood. Pressure on the probe can force it through an apparently sound skin to penetrate deeply into decayed wood. This technique is especially useful for checking sills where visual access to the underside is restricted.

Following the inspection and analysis of the results, the scope of the necessary repairs will be evident and a plan for the rehabilitation can be formulated. Generally the actions necessary to return a window to "like new" condition will fall into three broad categories: 1) routine maintenance procedures, 2) structural stabilization, and 3) parts replacement. These categories will be discussed in the following sections and will be referred to respectively as Repair Class I, Repair Class II, and Repair Class III. Each successive repair class represents an increasing level of difficulty, expense, and work time. Note that most of the points mentioned in Repair Class I are routine maintenance items and should be provided in a regular maintenance program for any building. The neglect of these routine items can contribute to many common window problems.

Before undertaking any of the repairs mentioned in the following sections all sources of moisture penetration should be identified and eliminated, and all existing decay fungi destroyed in order to arrest the deterioration process. Many commercially available fungicides and wood preservatives are toxic, so it is extremely important to follow the manufacturer's recommendations for application, and store all chemical materials away from children and animals. After fungicidal and preservative treatment the windows may be stabilized, retained, and restored with every expectation for a long service life.

Repair Class I: Routine Maintenance

Repairs to wooden windows are usually labor intensive and relatively uncomplicated. On small scale projects this allows the do-it-yourselfer to save money by repairing all or part of the windows. On larger projects it presents the opportunity for time and money which might otherwise be spent on the removal and replacement of existing windows, to be spent on repairs, subsequently saving all or part of the material cost of new window units. Regardless of the actual costs, or who performs the work, the evaluation process described earlier will provide the knowledge from which to specify an appropriate work program, establish the work element priorities, and identify the level of skill needed by the labor force.

The routine maintenance required to upgrade a window to "like new" condition normally includes the following steps: 1) some degree of interior and exterior paint removal, 2) removal and repair of sash (including reglazing where necessary), 3) repairs to the frame, 4) weatherstripping and reinstallation of the sash, and 5) repainting. These operations are illustrated for a typical double-hung wooden window (see figures 4a-f), but they may be adapted to other window types and styles as applicable.

Historic windows have usually acquired many layers of paint over time. Removal of excess layers or peeling and flaking paint will facilitate operation of the window and restore the clarity of the original detailing. Some degree of paint removal is also necessary as a first step in the proper surface preparation for subsequent refinishing (if paint color analysis is desired, it should be conducted prior to the onset of the paint removal). There are several safe and effective techniques for removing paint from wood, depending on the amount of paint to be removed. Several techniques such as scraping, chemical stripping, and the use of a hot air gun are discussed in "Preservation Briefs: 10 Paint Removal from Historic Woodwork" (see Additional Reading section at end).

Paint removal should begin on the interior frames, being careful to remove the paint from the interior stop and the parting bead, particularly along the seam where these stops meet the jamb. This can be accomplished by running a utility knife along the length of the seam, breaking the paint bond. It will then be much easier to remove the stop, the parting bead and the sash. The interior stop may be initially loosened from the sash side to avoid visible scarring of the wood and then gradually pried loose using a pair of putty knives, working up and down the stop in small increments (see figure 4b). With the stop removed, the lower or interior sash may be withdrawn. The sash cords should be detached from the sides of the sash and their ends may be pinned with a nail or tied in a knot to prevent them from falling into the weight pocket.

Removal of the upper sash on double-hung units is similar but the parting bead which holds it in place is set into a groove in the center of the stile and is thinner and more delicate than the interior stop. After removing any paint along the seam, the parting bead should be carefully pried out and worked free in the same manner as the interior stop. The upper sash can be removed in the same manner as the lower one and both sash taken to a convenient work area (in order to remove the sash the interior stop and parting bead need only be removed from one side of the window). Window openings can be covered with polyethylene sheets or plywood sheathing while the sash are out for repair.

The sash can be stripped of paint using appropriate techniques, but if any heat treatment is used (see figure 4c), the glass should be removed or protected from the sudden temperature change which can cause breakage. An

Figure 4a. *The following series of photographs of the repair of a historic double-hung window use a unit which is structurally sound but has many layers of paint, some cracked and missing putty, slight separation at the joints, broken sash cords, and one cracked pane. Photo: John H. Myers*

Figure 4b. *After removing paint from the seam between the interior stop and the jamb, the stop can be pried out and gradually worked loose using a pair of putty knives as shown. To avoid visible scarring of the wood, the sash can be raised and the stop pried loose initially from the outer side. Photo: John H. Myers*

Figure 4c. *Sash can be removed and repaired in a convenient work area. Paint is being removed from this sash with a hot air gun while an asbestos sheet protects the glass from sudden temperature change. Photo: John H. Myers*

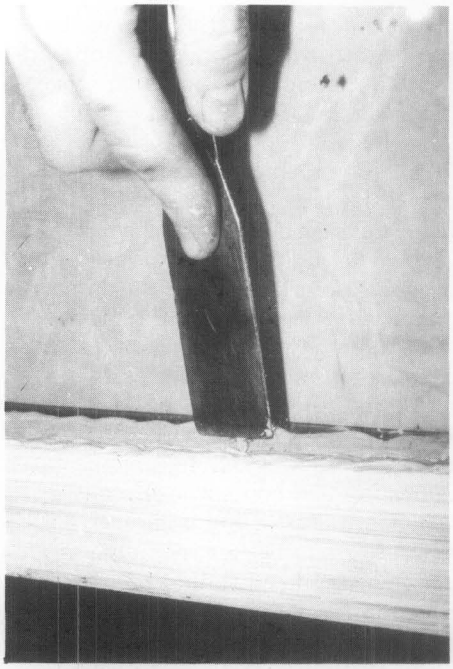

Figure 4d. *Reglazing or replacement of the putty requires that the existing putty be removed manually, the glazing points be extracted, the glass removed, and the back putty scraped out. To reglaze, a bed of putty is laid around the perimeter of the rabbet, the pane is pressed into place, glazing points are inserted to hold the pane (shown), and a final seal of putty is beveled around the edge of the glass. Photo: John H. Myers*

Figure 4e. *A common repair is the replacement of broken sash cords with new cords (shown) or with chains. The weight pocket is often accessible through a removable plate in the jamb, or by removing the interior trim. Photo: John H. Myers*

Figure 4f. *Following the relatively simple repairs, the window is weathertight, like new in appearance, and serviceable for many years to come. Both the historic material and the detailing and craftsmanship of this original window have been preserved. Photo: John H. Myers*

overlay of aluminum foil on gypsum board or asbestos can protect the glass from such rapid temperature change. It is important to protect the glass because it may be historic and often adds character to the window. Deteriorated putty should be removed manually, taking care not to damage the wood along the rabbet. If the glass is to be removed, the glazing points which hold the glass in place can be extracted and the panes numbered and removed for cleaning and reuse in the same openings. With the glass panes out, the remaining putty can be removed and the sash can be sanded, patched, and primed with a preservative primer. Hardened putty in the rabbets may be softened by heating with a soldering iron at the point of removal. Putty remaining on the glass may be softened by soaking the panes in linseed oil, and then removed with less risk of breaking the glass. Before reinstalling the glass, a bead of glazing compound or linseed oil putty should be laid around the rabbet to cushion and seal the glass. Glazing compound should only be used on wood which has been brushed with linseed oil and primed with an oil based primer or paint. The pane is then pressed into place and the glazing points are pushed into the wood around the perimeter of the pane (see figure 4d). The final glazing compound or putty is applied and beveled to complete the seal. The sash can be refinished as desired on the inside and painted on the outside as soon as a "skin" has formed on the putty, usually in 2 or 3 days. Exterior paint should cover the beveled glazing compound or putty and lap over onto the glass slightly to complete a weathertight seal. After the proper curing times have elapsed for paint and putty, the sash will be ready for reinstallation.

While the sash are out of the frame, the condition of the wood in the jamb and sill can be evaluated. Repair and refinishing of the frame may proceed concurrently with repairs to the sash, taking advantage of the curing times for the paints and putty used on the sash. One of the most common work items is the replacement of the sash cords with new rope cords or with chains (see figure 4e). The weight pocket is frequently accessible through a door on the face of the frame near the sill, but if no door exists, the trim on the interior face may be removed for access. Sash weights may be increased for easier window operation by elderly or handicapped persons. Additional repairs to the frame and sash may include consolidation or replacement of deteriorated wood. Techniques for these repairs are discussed in the following sections.

The operations just discussed summarize the efforts necessary to restore a window with minor deterioration to "like new" condition (see figure 4f). The techniques can be applied by an unskilled person with minimal training and experience. To demonstrate the practicality of this approach, and photograph it, a Technical Preservation Services staff member repaired a wooden double-hung, two over two window which had been in service over ninety years. The wood was structurally sound but the window had one broken pane, many layers of paint, broken sash cords and inadequate, worn-out weatherstripping. The staff member found that the frame could be stripped of paint and the sash removed quite easily. Paint, putty and glass removal required about one hour for each sash, and the reglazing of both sash was accomplished in about one hour. Weatherstripping of the sash and frame, replacement of the sash cords and reinstallation of the sash, parting bead, and stop required an hour and a half. These times refer only to individual operations; the entire process took several days due to the drying and curing times for putty, primer, and paint, however, work on other window units could have been in progress during these lag times.

Repair Class II: Stabilization

The preceding description of a window repair job focused on a unit which was operationally sound. Many windows will show some additional degree of physical deterioration, especially in the vulnerable areas mentioned earlier, but even badly damaged windows can be repaired using simple processes. Partially decayed wood can be waterproofed, patched, built-up, or consolidated and then painted to achieve a sound condition, good appearance, and greatly extended life. Three techniques for repairing partially decayed or weathered wood are discussed in this section, and all three can be accomplished using products available at most hardware stores.

One established technique for repairing wood which is split, checked or shows signs of rot, is to: 1) dry the wood, 2) treat decayed areas with a fungicide, 3) waterproof with two or three applications of boiled linseed oil (applications every 24 hours), 4) fill cracks and holes with putty, and 5) after a "skin" forms on the putty, paint the surface. Care should be taken with the use of fungicide which is toxic. Follow the manufacturers' directions and use only on areas which will be painted. When using any technique of building up or patching a flat surface, the finished surface should be sloped slightly to carry water away from the window and not allow it to puddle. Caulking of the joints between the sill and the jamb will help reduce further water penetration.

When sills or other members exhibit surface weathering they may also be built-up using wood putties or homemade mixtures such as sawdust and resorcinol glue, or whiting and varnish. These mixtures can be built up in successive layers, then sanded, primed, and painted. The same caution about proper slope for flat surfaces applies to this technique.

Wood may also be strengthened and stabilized by consolidation, using semi-rigid epoxies which saturate the porous decayed wood and then harden. The surface of the consolidated wood can then be filled with a semi-rigid epoxy patching compound, sanded and painted (see figure 5). Epoxy patching compounds can be used to build up

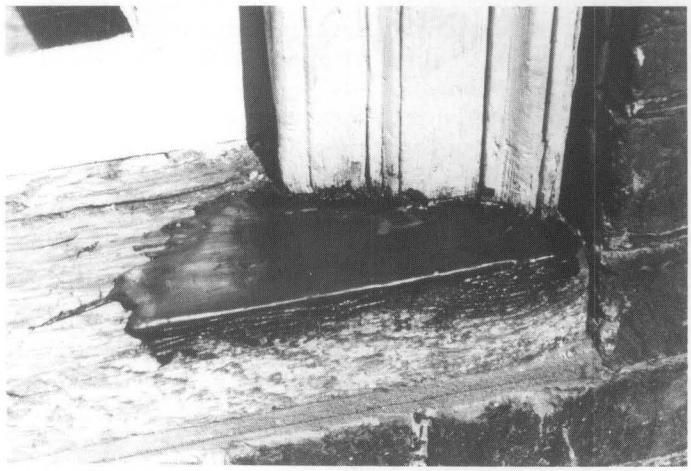

Figure 5. *This illustrates a two-part epoxy patching compound used to fill the surface of a weathered sill and rebuild the missing edge. When the epoxy cures, it can be sanded smooth and painted to achieve a durable and waterproof repair. Photo: John H. Myers*

missing sections or decayed ends of members. Profiles can be duplicated using hand molds, which are created by pressing a ball of patching compound over a sound section of the profile which has been rubbed with butcher's wax. This can be a very efficient technique where there are many typical repairs to be done. Technical Preservation Services has published *Epoxies for Wood Repairs in Historic Buildings* (see Additional Reading section at end), which discusses the theory and techniques of epoxy repairs. The process has been widely used and proven in marine applications; and proprietary products are available at hardware and marine supply stores. Although epoxy materials may be comparatively expensive, they hold the promise of being among the most durable and long lasting materials available for wood repair.

Any of the three techniques discussed can stabilize and restore the appearance of the window unit. There are times, however, when the degree of deterioration is so advanced that stabilization is impractical, and the only way to retain some of the original fabric is to replace damaged parts.

Repair Class III: Splices and Parts Replacement

When parts of the frame or sash are so badly deteriorated that they cannot be stabilized there are methods which permit the retention of some of the existing or original fabric. These methods involve replacing the deteriorated parts with new matching pieces, or splicing new wood into existing members. The techniques require more skill and are more expensive than any of the previously discussed alternatives. It is necessary to remove the sash and/or the affected parts of the frame and have a carpenter or woodworking mill reproduce the damaged or missing parts. Most millwork firms can duplicate parts, such as muntins, bottom rails, or sills, which can then be incorporated into the existing window, but it may be necessary to shop around because there are several factors controlling the practicality of this approach. Some woodworking mills do not like to repair old sash because nails or other foreign objects in the sash can damage expensive knives (which cost far more than their profits on small repair jobs); others do not have cutting knives to duplicate muntin profiles. Some firms prefer to concentrate on larger jobs with more profit potential, and some may not have a craftsman who can duplicate the parts. A little searching should locate a firm which will do the job, and at a reasonable price. If such a firm does not exist locally, there are firms which undertake this kind of repair and ship nationwide. It is possible, however, for the advanced do-it-yourselfer or craftsman with a table saw to duplicate moulding profiles using techniques discussed by Gordie Whittington in "Simplified Methods for Reproducing Wood Mouldings," *Bulletin* of the Association for Preservation Technology, Vol. III, No. 4, 1971, or illustrated more recently in *The Old House*, Time-Life Books, Alexandria, Virginia, 1979.

The repairs discussed in this section involve window frames which may be in very deteriorated condition, possibly requiring removal; therefore, caution is in order. The actual construction of wooden window frames and sash is not complicated. Pegged mortise and tenon units can be disassembled easily, *if* the units are out of the building. The installation or connection of some frames to the surrounding structure, especially masonry walls, can complicate the work immeasurably, and may even require dismantling of the wall. It may be useful, therefore, to take the following approach to frame repair: 1) conduct regular maintenance of sound frames to achieve the longest life possible, 2) make necessary repairs in place wherever possible, using stabilization and splicing techniques, and 3) if removal is necessary, thoroughly investigate the structural detailing and seek appropriate professional consultation.

Another alternative may be considered if parts replacement is required, and that is sash replacement. If extensive replacement of parts is necessary and the job becomes prohibitively expensive it may be more practical to purchase new sash which can be installed into the existing frames. Such sash are available as exact custom reproductions, reasonable facsimiles (custom windows with similar profiles), and contemporary wooden sash which are similar in appearance. There are companies which still manufacture high quality wooden sash which would duplicate most historic sash. A few calls to local building suppliers may provide a source of appropriate replacement sash, but if not, check with local historical associations, the state historic preservation office, or preservation related magazines and supply catalogs for information.

If a rehabilitation project has a large number of windows such as a commercial building or an industrial complex, there may be less of a problem arriving at a solution. Once the evaluation of the windows is completed and the scope of the work is known, there may be a potential economy of scale. Woodworking mills may be interested in the work from a large project; new sash in volume may be considerably less expensive per unit; crews can be assembled and trained on site to perform all of the window repairs; and a few extensive repairs can be absorbed (without undue burden) into the total budget for a large number of sound windows. While it may be expensive for the average historic home owner to pay seventy dollars or more for a mill to grind a custom knife to duplicate four or five bad muntins, that cost becomes negligible on large commercial projects which may have several hundred windows.

Most windows should not require the extensive repairs discussed in this section. The ones which do are usually in buildings which have been abandoned for long periods or have totally lacked maintenance for years. It is necessary to thoroughly investigate the alternatives for windows which do require extensive repairs to arrive at a solution which retains historic significance and is also economically feasible. Even for projects requiring repairs identified in this section, if the percentage of parts replacement per window is low, or the number of windows requiring repair is small, repair can still be a cost effective solution.

Weatherization

A window which is repaired should be made as energy efficient as possible by the use of appropriate weatherstripping to reduce air infiltration. A wide variety of products are available to assist in this task. Felt may be fastened to the top, bottom, and meeting rails, but may have the disadvantage of absorbing and holding moisture, particularly at the bottom rail. Rolled vinyl strips may also be tacked into place in appropriate locations to reduce infiltration. Metal strips or new plastic spring strips may be used on the rails and, if space permits, in

the channels between the sash and jamb. Weatherstripping is a historic treatment, but old weatherstripping (felt) is not likely to perform very satisfactorily. Appropriate contemporary weatherstripping should be considered an integral part of the repair process for windows. The use of sash locks installed on the meeting rail will insure that the sash are kept tightly closed so that the weatherstripping will function more effectively to reduce infiltration. Although such locks will not always be historically accurate, they will usually be viewed as an acceptable contemporary modification in the interest of improved thermal performance.

Many styles of storm windows are available to improve the thermal performance of existing windows. The use of exterior storm windows should be investigated whenever feasible because they are thermally efficient, cost-effective, reversible, and allow the retention of original windows (see "Preservation Briefs: 3"). Storm window frames may be made of wood, aluminum, vinyl, or plastic; however, the use of unfinished aluminum storms should be avoided. The visual impact of storms may be minimized by selecting colors which match existing trim color. Arched top storms are available for windows with special shapes. Although interior storm windows appear to offer an attractive option for achieving double glazing with minimal visual impact, the potential for damaging condensation problems must be addressed. Moisture which becomes trapped between the layers of glazing can condense on the colder, outer prime window, potentially leading to deterioration. The correct approach to using interior storms is to create a seal on the interior storm while allowing some ventilation around the prime window. In actual practice, the creation of such a durable, airtight seal is difficult.

Window Replacement

Although the retention of original or existing windows is always desirable and this **Brief** is intended to encourage that goal, there is a point when the condition of a window may clearly indicate replacement. The decision process for selecting replacement windows should *not* begin with a survey of contemporary window products which are available as replacements, but should begin with a look at the windows which are being replaced. Attempt to understand the contribution of the window(s) to the appearance of the facade including: 1) the pattern of the openings and their size; 2) proportions of the frame and sash; 3) configuration of window panes; 4) muntin profiles; 5) type of wood; 6) paint color; 7) characteristics of the glass; and 8) associated details such as arched tops, hoods, or other decorative elements. Develop an understanding of how the window reflects the period, style, or regional characteristics of the building, or represents technological development.

Armed with an awareness of the significance of the existing window, begin to search for a replacement which retains as much of the character of the historic window as possible. There are many sources of suitable new windows. Continue looking until an acceptable replacement can be found. Check building supply firms, local woodworking mills, carpenters, preservation oriented magazines, or catalogs or suppliers of old building materials, for product information. Local historical associations and state historic preservation offices may be good sources of information on products which have been used successfully in preservation projects.

Consider energy efficiency as one of the factors for replacements, but do not let it dominate the issue. Energy conservation is no excuse for the wholesale destruction of historic windows which can be made thermally efficient by historically and aesthetically acceptable means. In fact, a historic wooden window with a high quality storm window added should thermally outperform a new double-glazed metal window which does not have thermal breaks (insulation between the inner and outer frames intended to break the path of heat flow). This occurs because the wood has far better insulating value than the metal, and in addition many historic windows have high ratios of wood to glass, thus reducing the area of highest heat transfer. One measure of heat transfer is the U-value, the number of Btu's per hour transferred through a square foot of material. When comparing thermal performance, the lower the U-value the better the performance. According to *ASHRAE 1977 Fundamentals*, the U-values for single glazed wooden windows range from 0.88 to 0.99. The addition of a storm window should reduce these figures to a range of 0.44 to 0.49. A non-thermal break, double-glazed metal window has a U-value of about 0.6.

Conclusion

Technical Preservation Services recommends the retention and repair of original windows whenever possible. We believe that the repair and weatherization of existing wooden windows is more practical than most people realize, and that many windows are unfortunately replaced because of a lack of awareness of techniques for evaluation, repair, and weatherization. Wooden windows which are repaired and properly maintained will have greatly extended service lives while contributing to the historic character of the building. Thus, an important element of a building's significance will have been preserved for the future.

Additional Reading

ASHRAE Handbook-1977 Fundamentals. New York: American Society of Heating, Refrigerating and Air-conditioning Engineers, 1978 (chapter 26).

Ferro, Maximillian. *Preservation: Present Pathway to Fall River's Future.* Fall River, Massachusetts: City of Fall River, 1979 (chapter 7).

"Fixing Double-Hung Windows." *Old House Journal* (no. 12, 1979): 135.

Look, David W. "Preservation Briefs: 10 Paint Removal from Historic Woodwork." Washington, DC: Technical Preservation Services, U.S. Department of the Interior, forthcoming.

Morrison, Hugh. *Early American Architecture.* New York: Oxford University Press, 1952.

Phillips, Morgan, and Selwyn, Judith. *Epoxies for Wood Repairs in Historic Buildings.* Washington, DC: Technical Preservation Services, U.S. Department of the Interior (Government Printing Office, Stock No. 024-016-00095-1), 1978.

Rehab Right. Oakland, California: City of Oakland Planning Department, 1978 (pp. 78-83).

"Sealing Leaky Windows." *Old House Journal* (no. 1, 1973): 5.

Smith, Baird M. "Preservation Briefs: 3 Conserving Energy in Historic Buildings." Washington, DC: Technical Preservation Services, U.S. Department of the Interior, 1978.

1981

REAL PROPERTY RECORD
CITY OF LAKE WORTH, FLORIDA

CARD No.

INDEX No.

DESCRIPTION

ADDRESS 915 North K Street.

SEC.	TWP.	RGE.

~~A. Johnson~~
WM. McKENNA

Lot 13 Block 280 Townsite

	KIND OF STRUCTURE	CONSTRUCTION	USE	Cond.	Class	Type
A	Bungalow	frame	Dwell	G		
B	Garage	"	Gar	G		
C						

DIAGRAM OF STRUCTURES

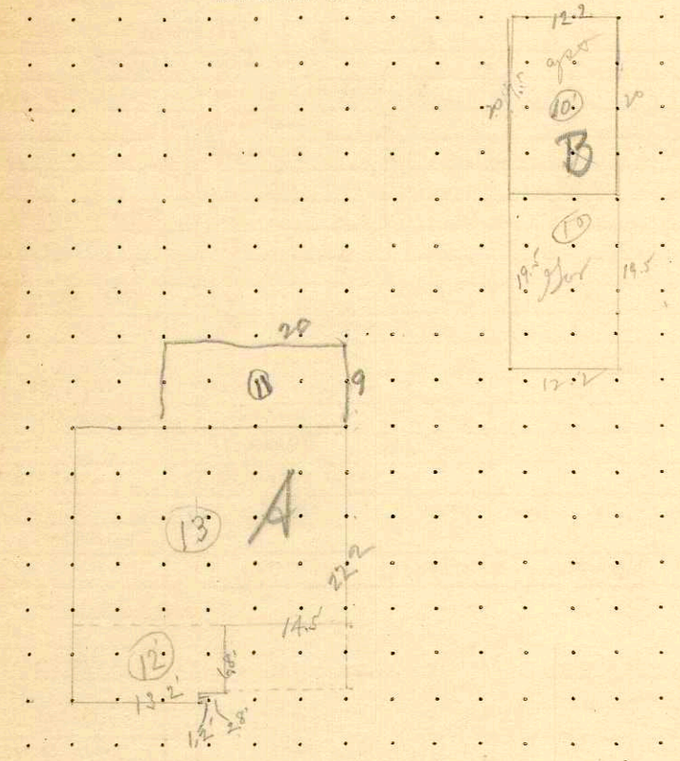

EXTERIOR FEATURES

	Foundation	Basement	EXTERIOR WALLS	ROOF TYPE	ROOF MATERIAL	EXT. FINISH	WINDOWS DOORS	PORCHES
A	Conc GRADE COND.	No. GRADE COND.	wood GRADE COND.	Gable GRADE COND.	asb. sh. GRADE COND.	Pt. GRADE COND.	wood GRADE COND.	1-Open GRADE COND.
B	Conc GRADE COND.	No GRADE COND.	wood GRADE COND.	Gable GRADE COND.	asb. sh. GRADE COND.	Pt GRADE COND.	wood GRADE COND.	No GRADE COND. X
C	GRADE COND.	GRADE COND.	GRADE COND.	GRADE COND.	GRADE COND.	GRADE COND.	GRADE COND.	GRADE COND.

INTERIOR FEATURES

	Floor Type	Floor Material	INTERIOR WALLS	FINISH	TRIM	ATTIC
A	Double-Single GRADE COND.	oak GRADE G COND. G	Plaster GRADE G COND. G	Pt. GRADE av. COND. G	wood GRADE av COND. G	UNF. yes FIN. NO. ROOMS
B	Double-Single GRADE COND.	cement GRADE COND.	GRADE COND. X	GRADE COND. X	GRADE COND. X	UNF. FIN. NO. ROOMS X
C	Double-Single GRADE COND.	GRADE COND.	GRADE COND.	GRADE COND.	GRADE COND.	UNF. FIN. NO. ROOMS

INTERIOR FEATURES

	PLUMBING TYPE	PLUMB. FIXTURES	HEATING	LIGHTING
A	av. GRADE COND.	NO. 4 av. GRADE COND. "	no. GRADE COND.	NO. FIXT'S. 7 GRADE av. COND. "
B	GRADE COND. X	NO. GRADE COND. X	GRADE COND. X	NO. FIXT'S. 1 GRADE av. COND. "
C	GRADE COND.	NO. GRADE COND.	GRADE COND.	NO. FIXT'S. GRADE COND.

EQUIPMENT	A	B	C
ELEVATORS			
SPRINKLER SYS.			
SOLAR HEATER			
LAUNDRY TRAYS			
Air Conditioning			
STORM SHUTTERS	✓		
INSULATED WALLS			
INSULATED ROOF			
GUTTER & Dn.-Spout			
TYPE OF WIRING			
REFRIGERATION			
INDOOR BEDS			
SCREENED	✓		

PHOTO A

PHOTO B

BUILDING COMPUTATIONS

No.	SIZES	SQ. FT.	HT.	CU. F.	Rate	COST	% COND.	AMOUNT
A	22 x 30	660	13	8580				
	13 x 7	91	12	1092				
	20 x 9	180	11	1980				
		931	10	11652	30	349.5	90	314.5
Gar	12.2 x 19.5	238 1/2	10	1190	30	357	90	321
Dist	12.2 x 20	244	10	2440	30	732	100	732

ROOMS			
LIVING	1		
DINING	1		
KITCHEN	1		
BED	2		
BATH	1		

UNITS			
STORES			
OFFICES			
APARTMENTS			
GARAGES			

FIELDED BY: CWH 3/31 DATE

APPRAISED BY DATE

	STORIES	FLOORS	HT. IN FT.	YR. BUILT	YEAR REMODELED	ORIGINAL COST	ADDED COST	EST. LIFE	RATE NEW	Physical Deterioration	Obsolescence	Total Depreciation %	CONDITION
A				'41									
B				'41	Ho		1400						
C													

4198

CITY OF LAKE WORTH

BUILDING PERMIT

No 6250

Void if not used within 60 days.

Permission is hereby granted for the construction of a building as per plans and specifications filed with the Building Inspector.

$3000 ee

Owner H. H. Nelson

Builder Self

Location of building 915 - No. K Street, between 9th & 10th Ave No.

Lot 13 Block 280 Addition Town Fire Limit 3rd Zone B

New construction ✓ Repairs ---------- Remodeling ----------

FEE FOR PERMIT — $1.00 plus ten cents per each additional $100.00.

REMARKS: Res & Garage according to Plans on File Amt. 2/20/42

Date 10/20/41

Paid $ 4.00

City Treasurer.

A. W. Pearson

Building Inspector.

Permit No. 6250
Zone B
Fire Limit 2nd

APPLICATION FOR BUILDING PERMIT

CITY OF LAKE WORTH

Application is hereby made to the Building Inspector of the City of Lake Worth, for the approval of plans, in duplicate, herewith submitted including plot plan, for the erection of the building or buildings herein described. All provisions of the Building and Zoning Laws and Ordinances shall be complied with in the erection of said building or buildings, whether specified herein or not.

(Sign here) H. T. Wilson

Lake Worth, Florida 10/20, 1941.

DETAILED STATEMENT OF SPECIFICATIONS FOR THE ERECTION OF NEW BUILDINGS.

State buildings to be erected Frame No. of stories One

Location of Bldg. 913 N. H St Lot 13 Block 290 Addn. Memo

Occupancy 1 Family No. of rooms 5 & Bath

Size of lot: No. of feet frontage 50 Feet rear 50 Depth 132.1

Size of Bldg: 30x30 Feet Frontage 30 Feet rear 30 Depth 30

Build. set back: Front 35' Sides 2' & 15' Rear 5'

No. of feet in height from surface of ground to highest point of roof 16'

Height of 1st story 8'6" 2d 3d 4th

Size of foundation: Footing 7 x 12 Wall 6"

Material for foundation Concrete & Block

Thickness of external walls: 1st story 6" 2d 3d 4th

Size of girder or beam set on

Construction of chimneys

With what materials walls to be coped

Will roof be flat, pitched, or mansard? Pitched Material of roofing Asbestos

Size of joist or beams: 1st floor 2 x 8 2d 3d 4th

Centers 16"

Ceiling joist 2 x 4 Rafters 2 x 6 Centers 16"

Size of studding 2 x 4 Centers 16"

Will there be any projection beyond building line?

Have you complied with State Workmen's Compensation Requirements?

Cost of building $2,000.00

Remarks One Car Garage according to plan.

Owner H. T. Wilson Address 913 N. H St.

Contractor Self Address

Work was commenced on the within building on the 20th day of Oct.

, 1941, and completed on the 20th day of Feb.

, 1942.

Respectfully,

H. T. Wilson

Inspector.

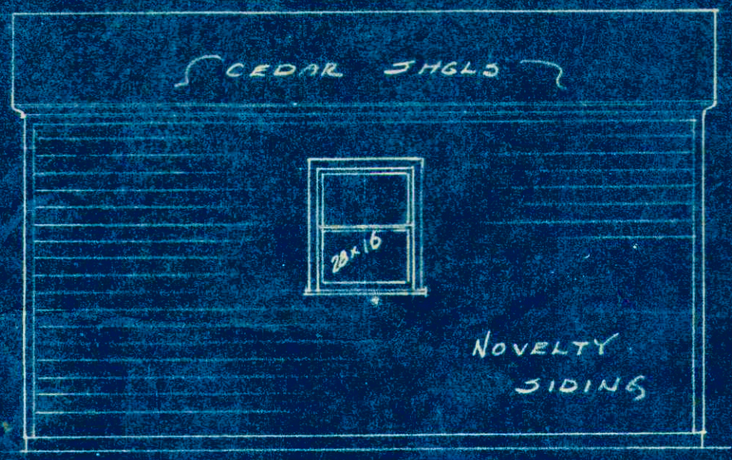

SIDE ELEVATION

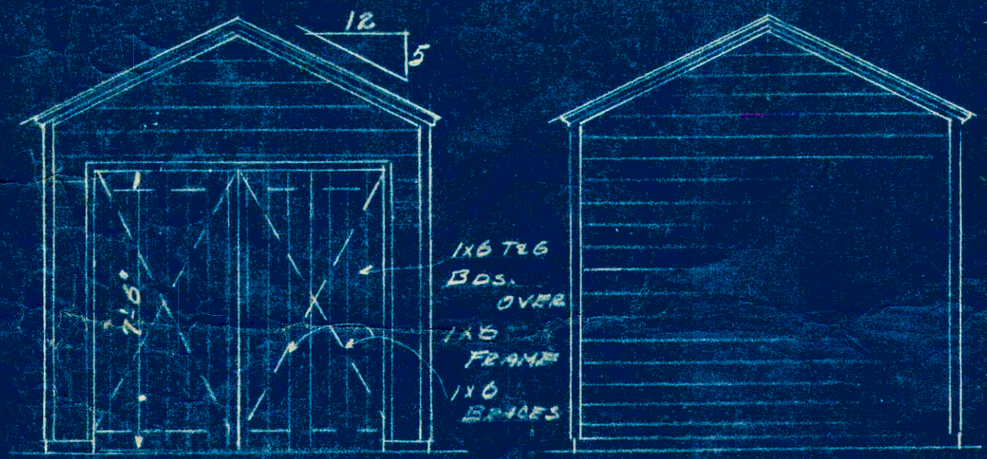

FRONT REAR

GARAGE

SCALE 1/4"=1'-0"

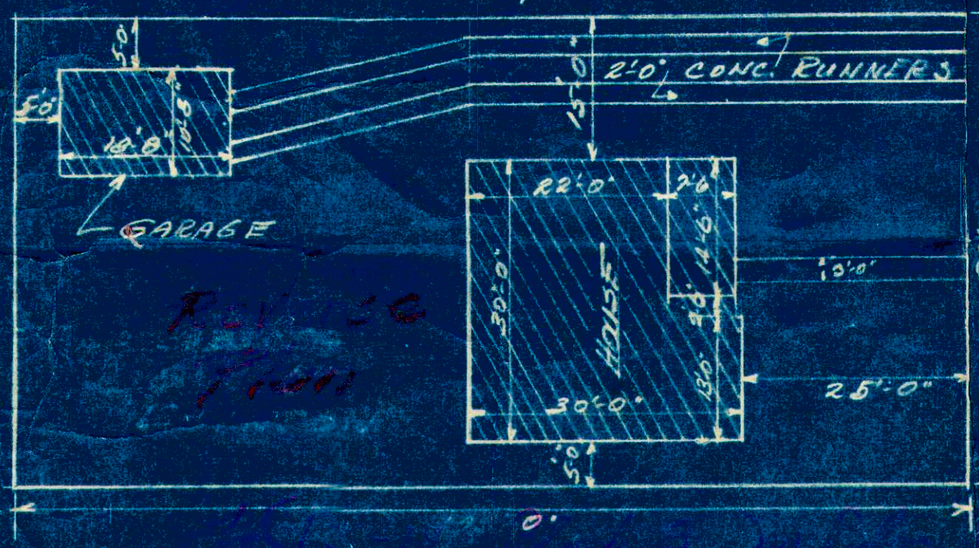

PLOT PLAN

SCALE 1/16"=1'-0"

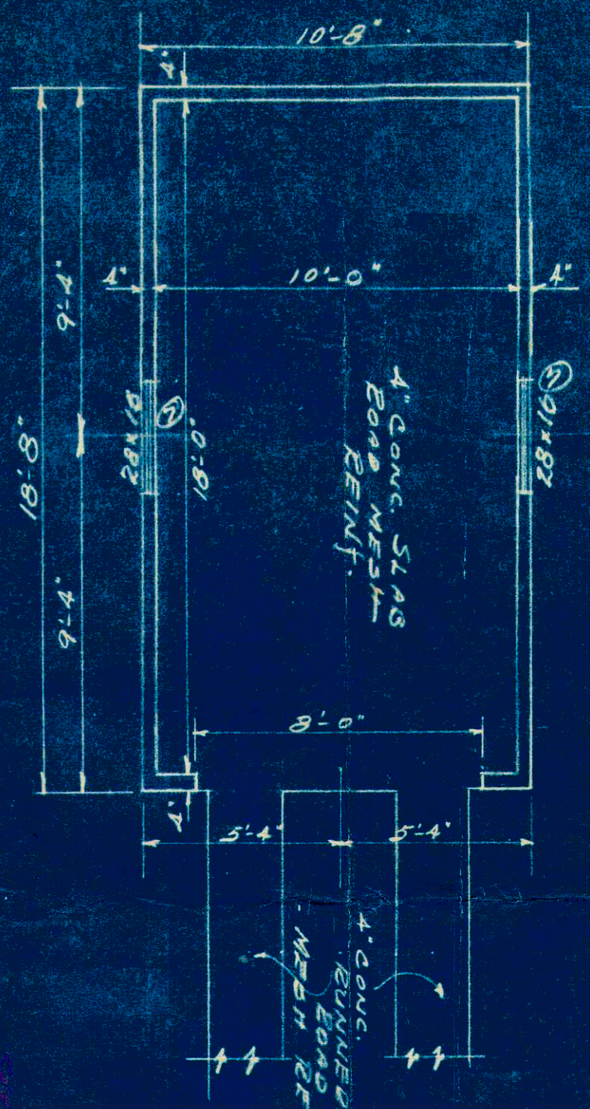

GARAGE PLAN

SCALE 1/4"=1'-0"

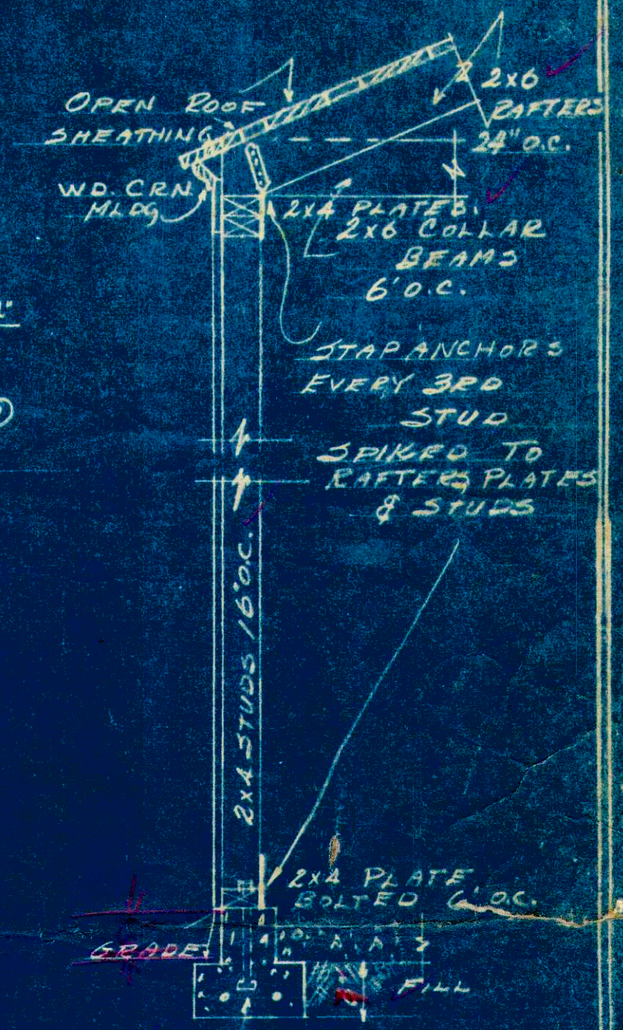

GARAGE WALL SECTION

SCALE 3/4"=1'-0"

N

SHEET 1

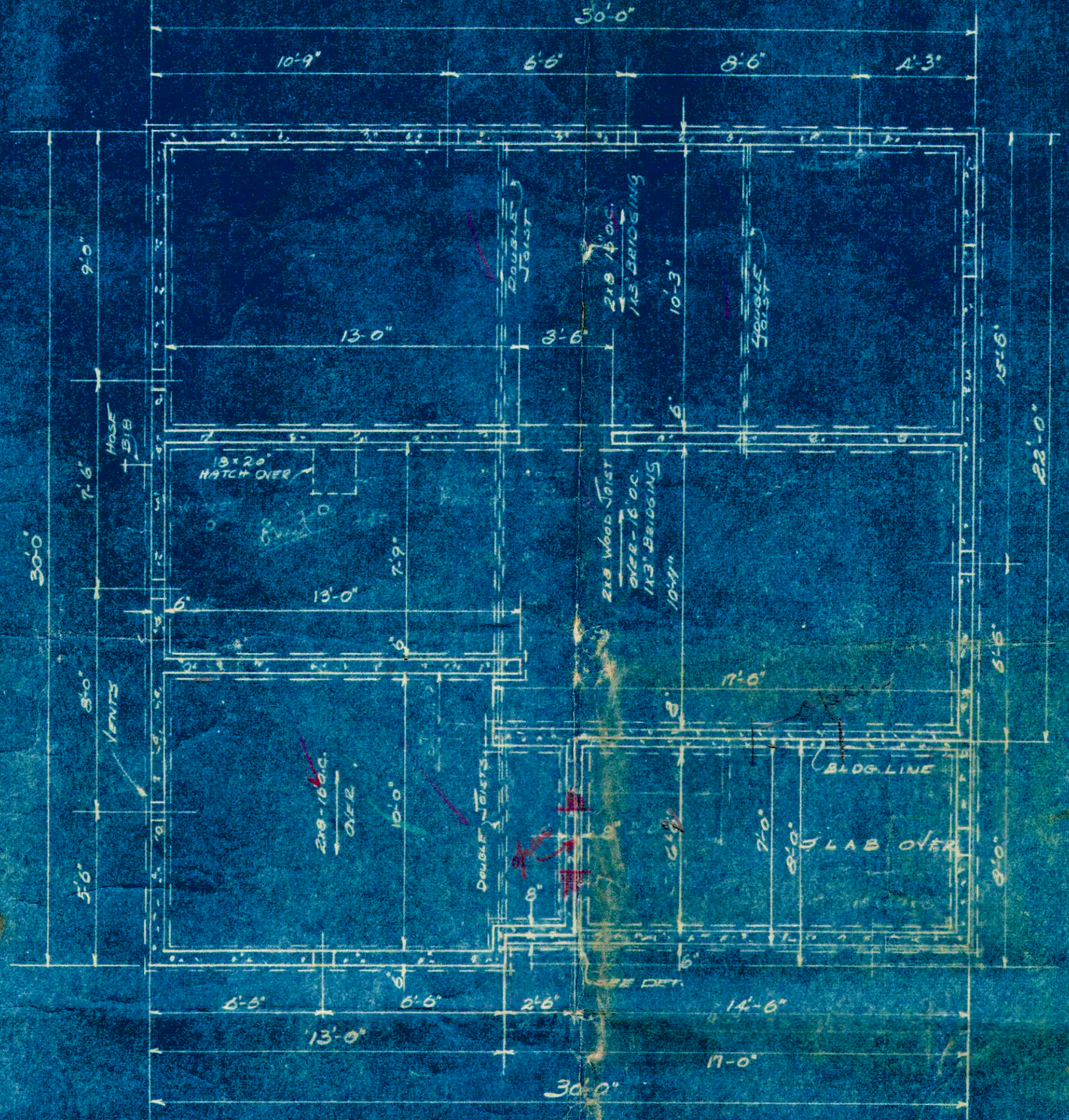

Reverse Plan

FOOTINGS & FOUNDATION

1/4" SCALE

SHEET 2

WINDOW SCHEDULE

NO.	SIZE
1	2-24 x 24 2 LGHT DH WOOD MILL WORK
2	28 x 24 2 LGHT DH BED RM #1
3	28 x 24 2 LT DH BED RM.
4	28 x 24 2 LT DH DINING RM.
5	30 x 44 2 LT DH KITCHEN
6	26" x 16 2 LT DH BATH
7	28 x 10 2 LT DH GARAGE

DOOR SCHEDULE

A	2-8 x 6-8 x 1 3/8" COLONIAL
B	2-8 x 6-8 x 1 3/8" GLAZED COMB.
C	2-6 x 6-8 x 1 3/8" 2 WD. PANEL
D	2-6 x 6-8 x 1 3/8" 2 WD. PANEL
E	2'-0" x 6-8 x 1 3/8" 2 WD. PANEL

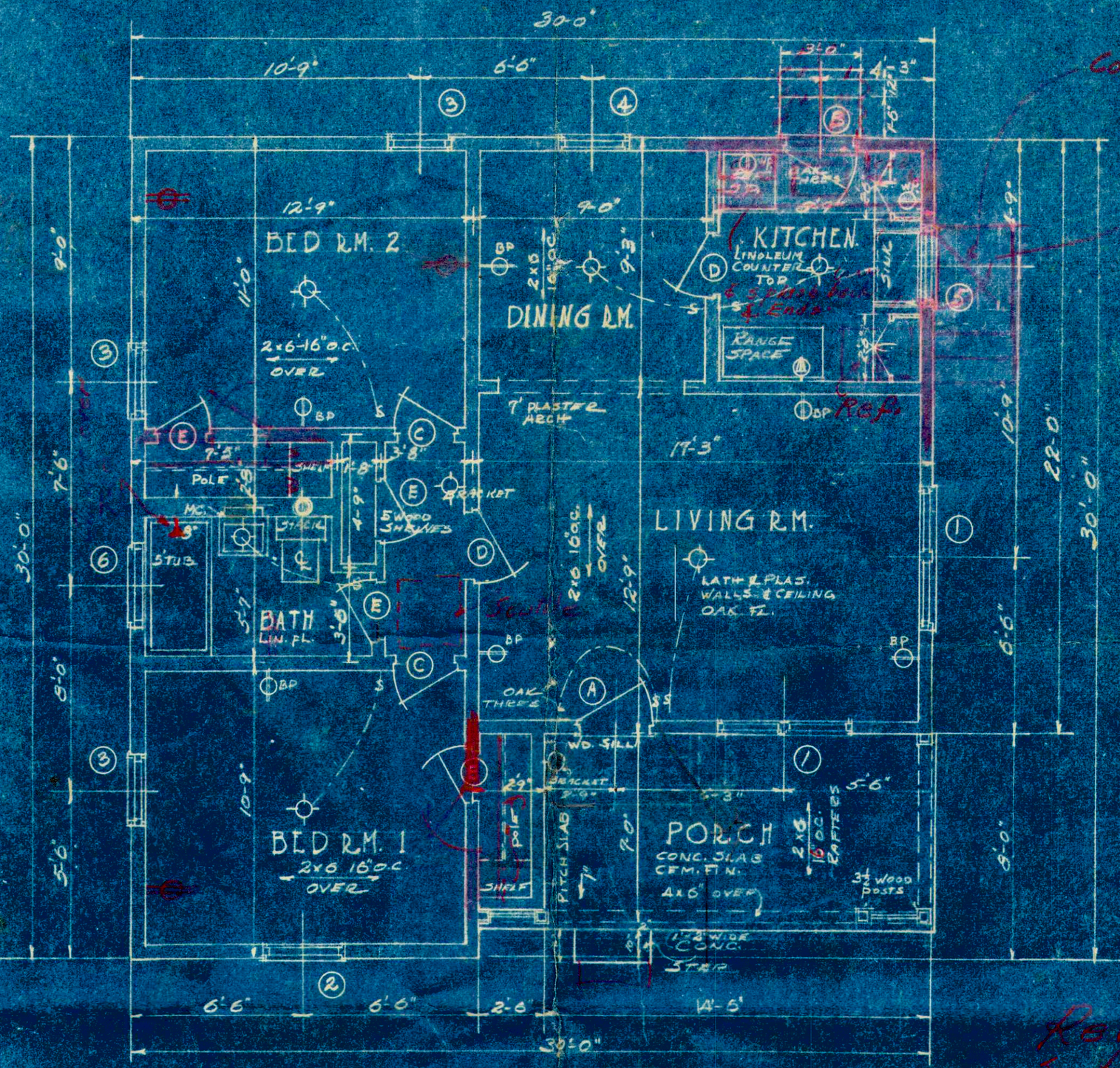

FLOOR PLAN

1/4" SCALE

SHEET 3

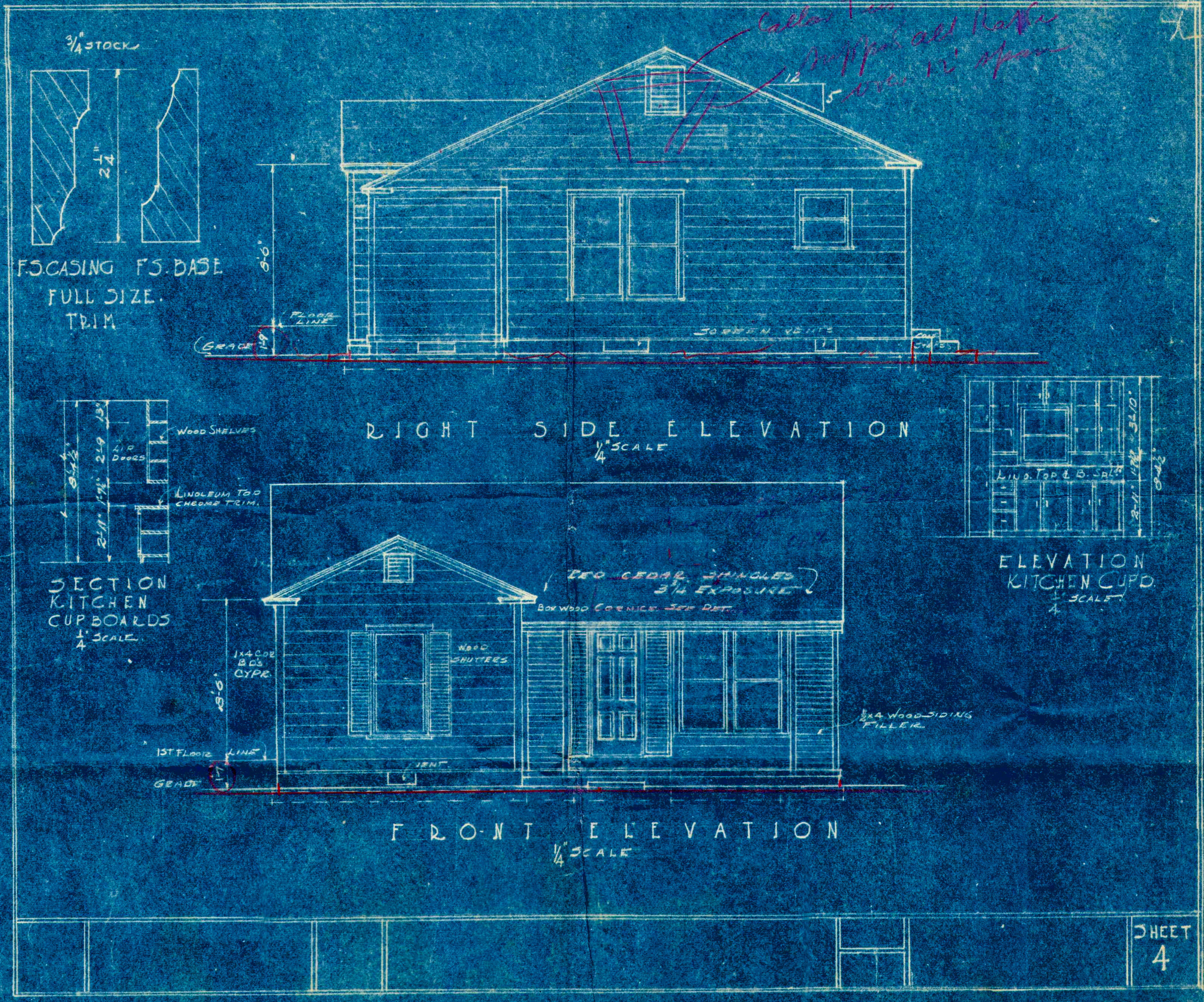

3/4" STOCK
F.S. CASING F.S. BASE
FULL SIZE.
TRIM
FLOOR LINE
GRADE
8'-0"
RIGHT SIDE ELEVATION
1/4" SCALE
WOOD SHELVES
LIP DOORS
LINOLEUM TOP CHROME TRIM.
SECTION
KITCHEN
CUPBOARDS
1/4" SCALE
LINO. TOP & B. SPL.
ELEVATION
KITCHEN CUPD.
1/4" SCALE
RED CEDAR SHINGLES 3 1/4" EXPOSURE
BOX WOOD CORNICE SEE DET.
1x4 COR. B'DS CYPR.
WOOD SHUTTERS
1x4 WOOD SIDING FILLER
1ST FLOOR LINE
GRADE
VENT
8'-0"
FRONT ELEVATION
1/4" SCALE
SHEET
4

LEFT SIDE ELEVATION

1/4" SCALE

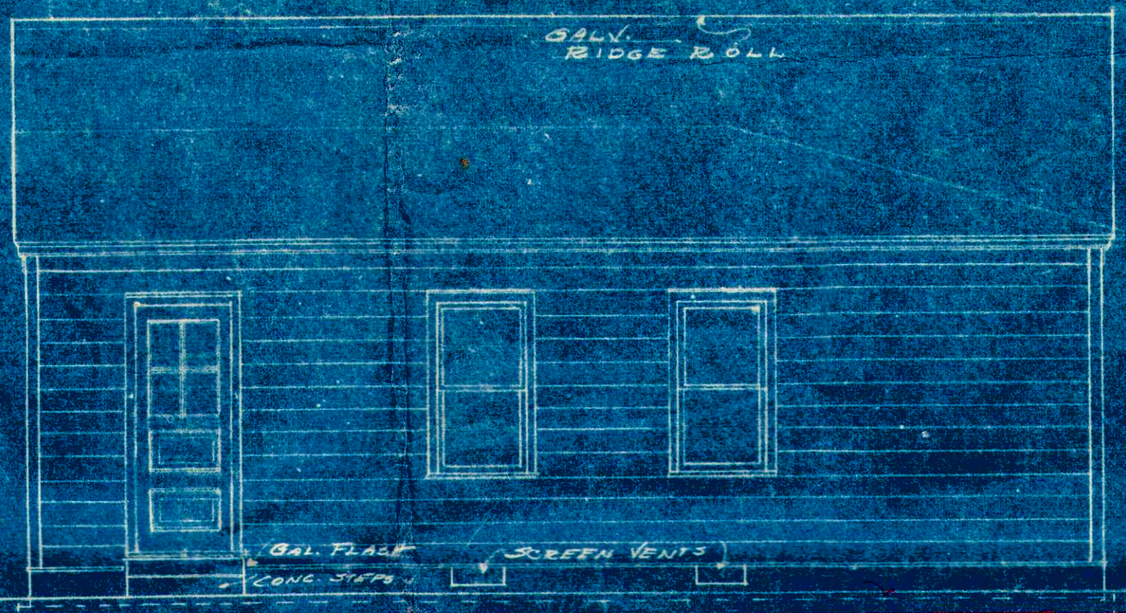

REAR ELEVATION

1/4" SCALE

SHEET 5

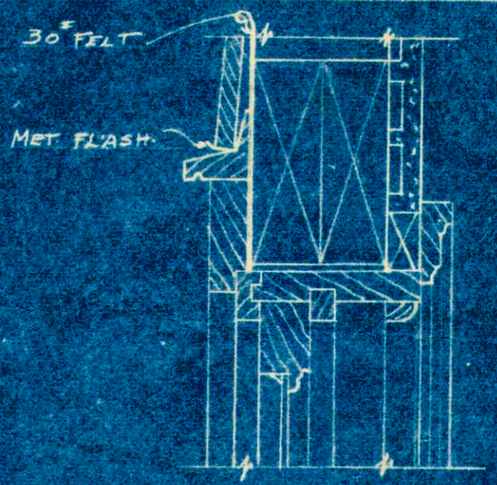

HEAD JAMB

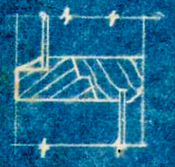

MEETING RAIL

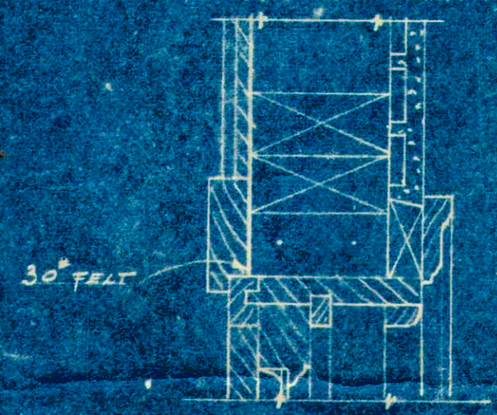

SIDE JAMB

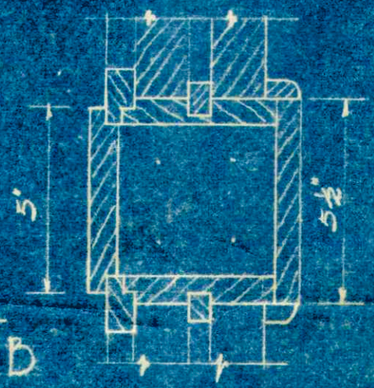

MULLION

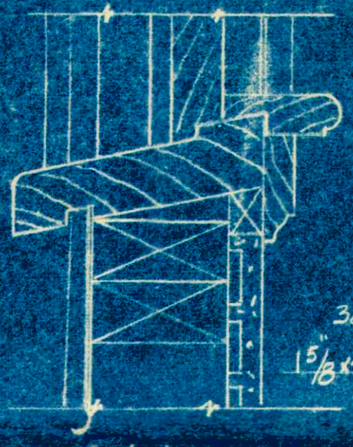

SILL

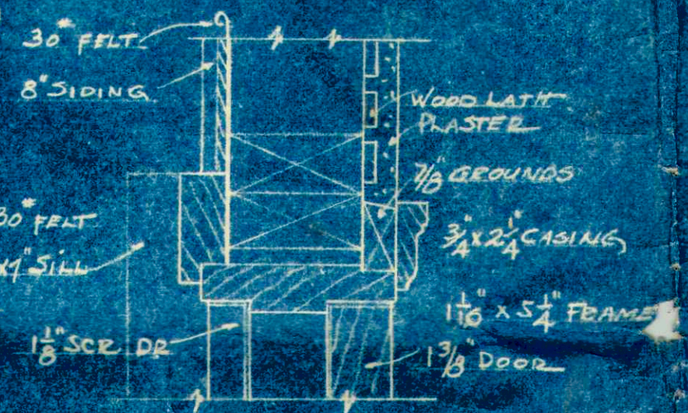

O.S. DOOR FRAME
3" SCALE

TYPICAL SECTION
THRU WOOD SASH
3" SCALE

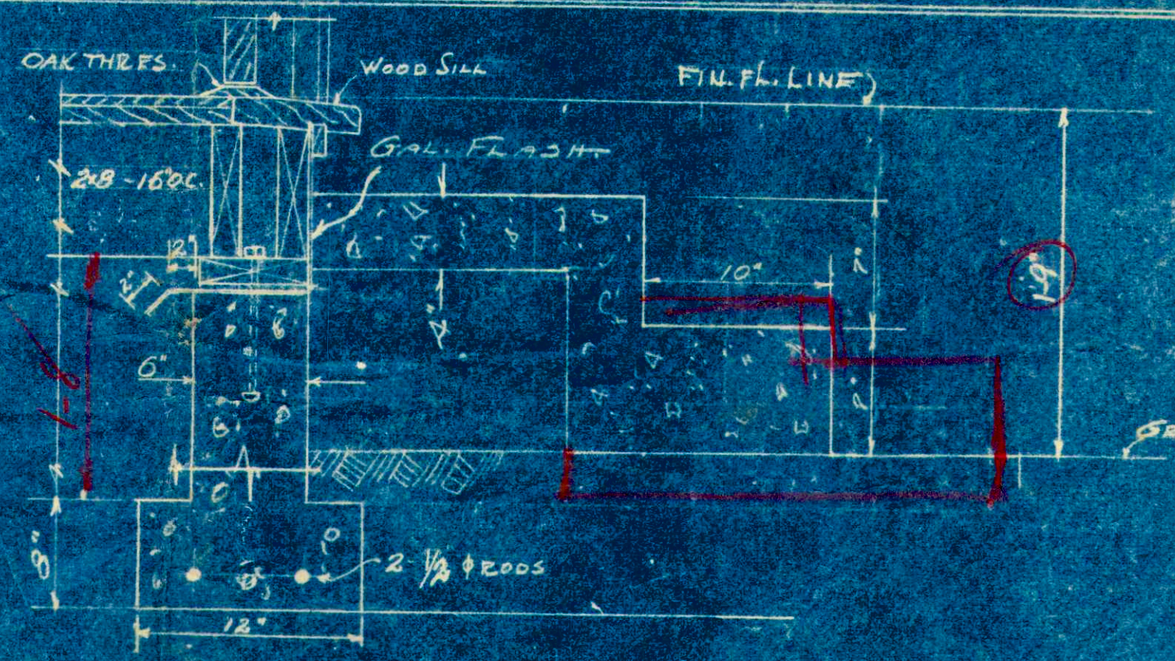

SECTION THRU SILL & CONC.
STEPS AT KITCHEN ENTRANCE
1½ SCALE

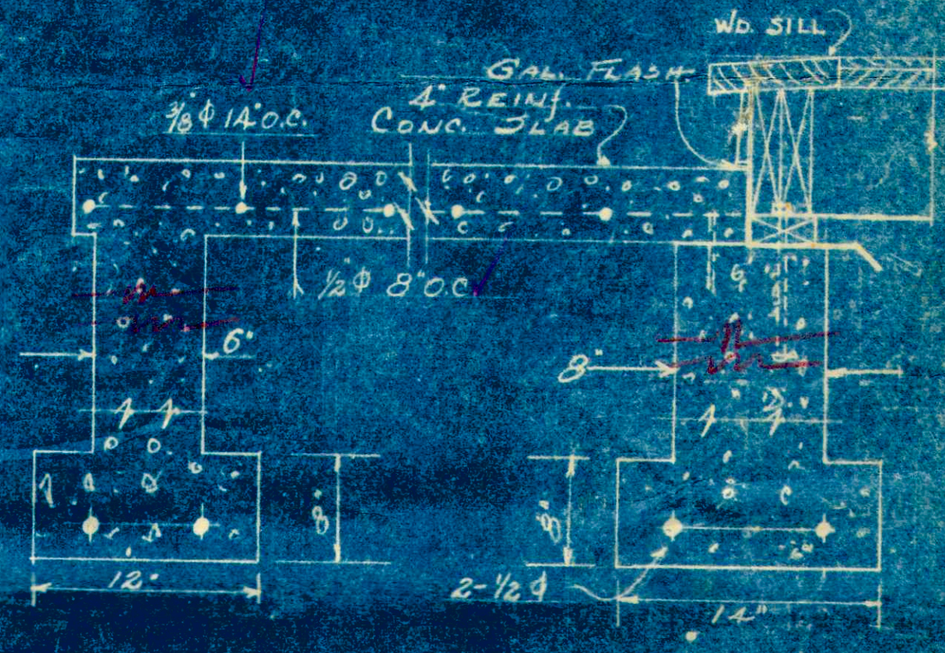

SECTION THRU FRONT
PORCH STEPS & SLAB.
1½ SCALE

SHEET 6

RED CEDAR SHINGLES
3¾ EXP.
1x2
1x4
1x6
3/4 - 1/4 ROUND
7'-0"
SPACED ROOF SHEATHING
2x6 RAFTERS 24" O.C. 16" O.C. - All Rafter
1x6 TIE BRACE
12"
5"
2x6 RAFTERS 16" O.C.
STRAP RAFTER TIES EVERY 2ND RAFTER
DOUBLE 2x4 PLATE
DOUBLE HEADER
2x4 [illegible] 16" O.C.
1x6 V.C.Y.P. CEIL.
2x6 CEIL. JOIST 16" O.C.
1x4 BRACE
7/8" GROUNDS WOOD LATH AND PLAST.
6'3" TO FIN. FL. HEADS FOR ALL WINDOWS & DOORS
7'-0"
7/8" CLOSERS
3½" WD. CASE
8'-0"
8'-STUDS-16" O.C.
2¼" WOOD CASING
LATH & PLASTER
3½ WOOD BASE
FIN. FL. LINE
CONC. STEP
GRADE
Opng
2x8 16" O.C.
1x3 CROSS BRIDGING
1-8"
30# FELT
8" LAP SIDING
STAND. STUD & SILL TIES EVERY 2ND
2'-6"
A
A
CROSS SECTION
3/8" SCALE
PLAN OF FRAMING AT CORNER OF CLOSET, BED RM. No. 1 & TYPICAL FOR INTERIOR CORNERS ALL RMS.
3½ WD. BASE
OAK FIN. FL.
7/8 SUB. FL.
FIN. FL.
2x8 16" O.C.
CEM. GROUT
2" [illegible]
GAL. SHIELDS
2x8
GRADE
2'-0"
4"
8" CONC. FOUND
CEM. BASE
LINE OF PORCH SLAB
SECTION A-A
3/4" SCALE
30# FELT
3½ WD. BASE
2x8-16" O.C.
RIDGE
VALLEY
HIP
VALLEY
Solar Unit
ROOF PLAN
1/8" SCALE
SHEET 7

CITY OF LAKE WORTH
UNSAFE STRUCTURE INSPECTION REPORT

Street Address: 914 North M Street
PCN: 38-43-44-21-15-286-0040

The Building Official of the City of Lake Worth has inspected the structure located at the above-described property and has found such structure to be unsafe. The structure endangers the life health, property or safety of the general public and has one or more of the following conditions (applicable provisions checked):

100% Insufficient or unsafe means of egress not providing a safe path of travel in case of fire.
Building is partially boarded, but flooring and ceiling/roof structure at breach in rear of each structure has deteriorated to the degree that any passage risks structural failure.

75% Excessive stress loads (including dead loads).
Sections of roof visible from outside have begun to buckle and collapse. Severe leaking is causing deterioration of the roof framing.

75% Structure damaged to extent that structural integrity is compromised.
Exterior walls show signs of distress, but east wall in particular. East wall and roofing above are in imminent danger of collapse.

75% Exterior appendage or portion of structure not securely fastened, attached or anchored.
Exterior wall and roofing has deteriorated to the point of collapse in numerous locations.

100% Structure manifestly unsafe or unsanitary for purpose for which it is being used.
Interior shows evidence of extensive water and mold damage. There is no potable water to the structure. There is also an extreme problem with transient use.

75% Structure or portion thereof likely to fully or partially collapse due to dilapidation.
Ceilings collapsing in several locations. Wood visible around openings sagging toward collapse, as well as east wall in its entirety.

100% Structure constructed or maintained in violation of building codes.
No portion of the structure is compliant with current codes.

100% Structure or property unsafe so as to constitute a public nuisance.
There is visual evidence of transient usage present in the building. This, coupled with the possibility of imminent collapse of exterior wall makes the structure particularly unsafe and a public nuisance.

100% Structure or property constitutes a fire hazard or is dangerous and a hazard to public health and safety and welfare due to neglect and/or abandonment.
Dried and rotting wood throughout. No water service to site, creating a immediate and serious fire hazard.

100% Structure lacks illumination, ventilation or sanitary facilities adequate to protect the health or safety of the occupants or the public.
All of the above.

Additional comments regarding condition of structure: With close proximity of neighboring houses, transient use is a constant public nuisance. Fire hazard and danger of collapse compounds the problem.

Signed by: _____
Luis A. Martinez, Building Official

Date: _____

PRIVATE PROPERTY
914
914
02.04.2016

914
914
02.04.2016

02.04.2016

02.04.2016

02.04.2016

02.04.2016

02.04.2016

02.04.2016

C O P Y

CITY OF LAKE WORTH

Building Permit - No. 5024

$5000.

Owner--H. T. Nelson

Location of building--914 No. M St, between 19 & 20

Lot--4 Block--286 Fire Limit--Outer Zone--B

New construction--Dwelling

REMARKS--Studding 16" on center
2 x 8 joist 16" on center
Sills bolted down.

Date--April 6, 1938

Paid--$4.00

September 28--final

Jack Menges
City Treasurer

D. O. McMillan
Building Inspector

C O P Y

Permit No. 1024
Plan No. ____
Zone B
Fire Limit ____

Bureau of Building Inspection

CITY OF LAKE WORTH

Application for Erection of Buildings

Application is hereby made to the Bureau of Building Inspection of the City of Lake Worth, for the approval of plans, in duplicate, herewith submitted including plot plan, for the erection of the building or buildings herein described. All provisions of the Building and Zoning Laws and Ordinances shall be complied with in the erection of said building or buildings, whether specified herein or not.

(Sign here) Henry T. Wilson

Lake Worth, Florida April 5, 1938.

DETAILED STATEMENT OF SPECIFICATIONS FOR THE ERECTION OF NEW BUILDINGS.

State buildings to be erected Dwelling & Garage No. of stories one

Location of Bldg. 914 N M Lot 4 Block 286 Addn ____

Occupancy ____ No. of rooms ____

Size of Lot: No. of feet frontage 50 Feet rear 50 Depth 135

Size of Bldg: 32 1/2 8 Feet Frontage 32 Feet rear 32 Depth 28

Build. set back: front 20 Sides 6 & 12 Rear 80

No. of feet in height from surface of ground to highest point of roof 14

Height of 1st story 8 1/2 2d ____ 3d ____ 4th ____

Size of foundation: Footing 6 X 12 Wall 8"

Material for foundation Concrete

Thickness of external walls: 1st story ____ 2nd ____ 3d ____ 4th ____

Size of girder or beam ____ set on ____

Construction of chimneys ____

With what materials walls to be coped ____

Will roof be flat, pitched, or mansard? Pitched Material of roofing Shingles

Size of joist or beams: 1st floor 2 X 8 2nd ____ 3d ____ 4th ____

Centers 16

Ceiling joist 2 X 6 Rafters 2 X 6 Centers 16 & 24

Size of studding 2 X 4 Centers 16

Will there be any projection beyond building line? ____

Have you complied with State Workmen's Compensation Requirements? ____

Cost of building 5019

Remarks ____

Owner Henry T. Wilson Address 315 So. E St.

Contractor ____ Address ____

Work was commenced on the within building on the ____ day of ____, 19____, and completed on the ____ day of ____, 19____.

Respectfully,

____
Inspector.

OK
GDS

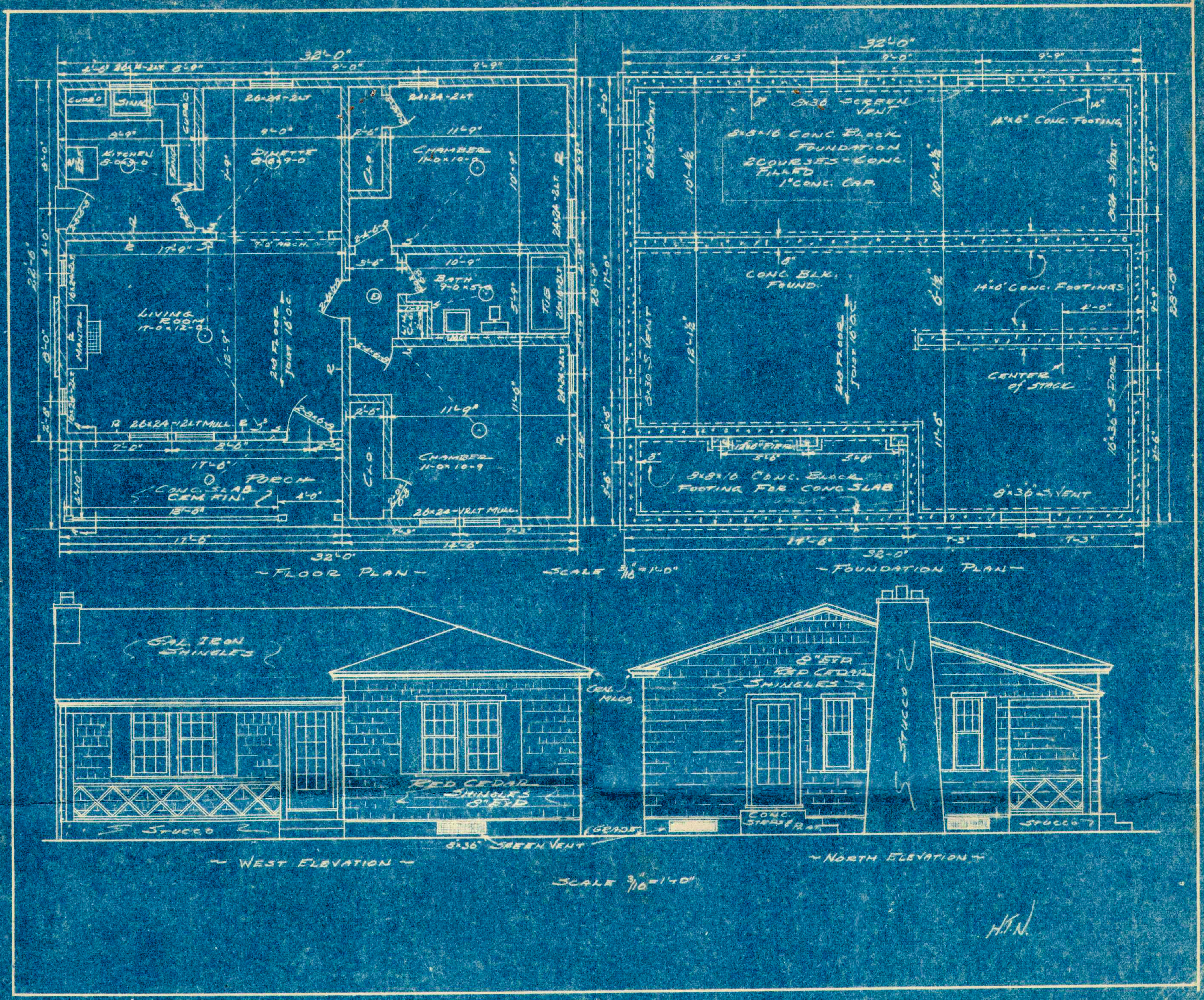

32'-0"
KITCHEN
DINETTE
CHAMBER
LIVING ROOM
MANTEL
BATH
TUB
CLO
PORCH
CONC. SLAB
CEM. FIN.
CHAMBER
2x8 FLOOR JOIST 16" O.C.
7'-0" ARCH.
~ FLOOR PLAN ~
SCALE 3/16"=1'-0"
8x8x16 CONC. BLOCK
FOUNDATION
2 COURSES - CONC. FILLED
1" CONC. CAP.
8" CONC. BLK. FOUND.
14"x6" CONC. FOOTING
14"x6" CONC. FOOTINGS
CENTER of STACK
8x8x16 CONC. BLOCK FOOTING FOR CONC. SLAB
8x36" S. VENT
~ FOUNDATION PLAN ~
GAL. IRON SHINGLES
RED CEDAR SHINGLES 8" EXP.
STUCCO
8x36" SCREEN VENT
GRADE
~ WEST ELEVATION ~
8" EXP. RED CEDAR SHINGLES
STUCCO
CONC. STEPS
~ NORTH ELEVATION ~
SCALE 3/16"=1'-0"
H.T.N.

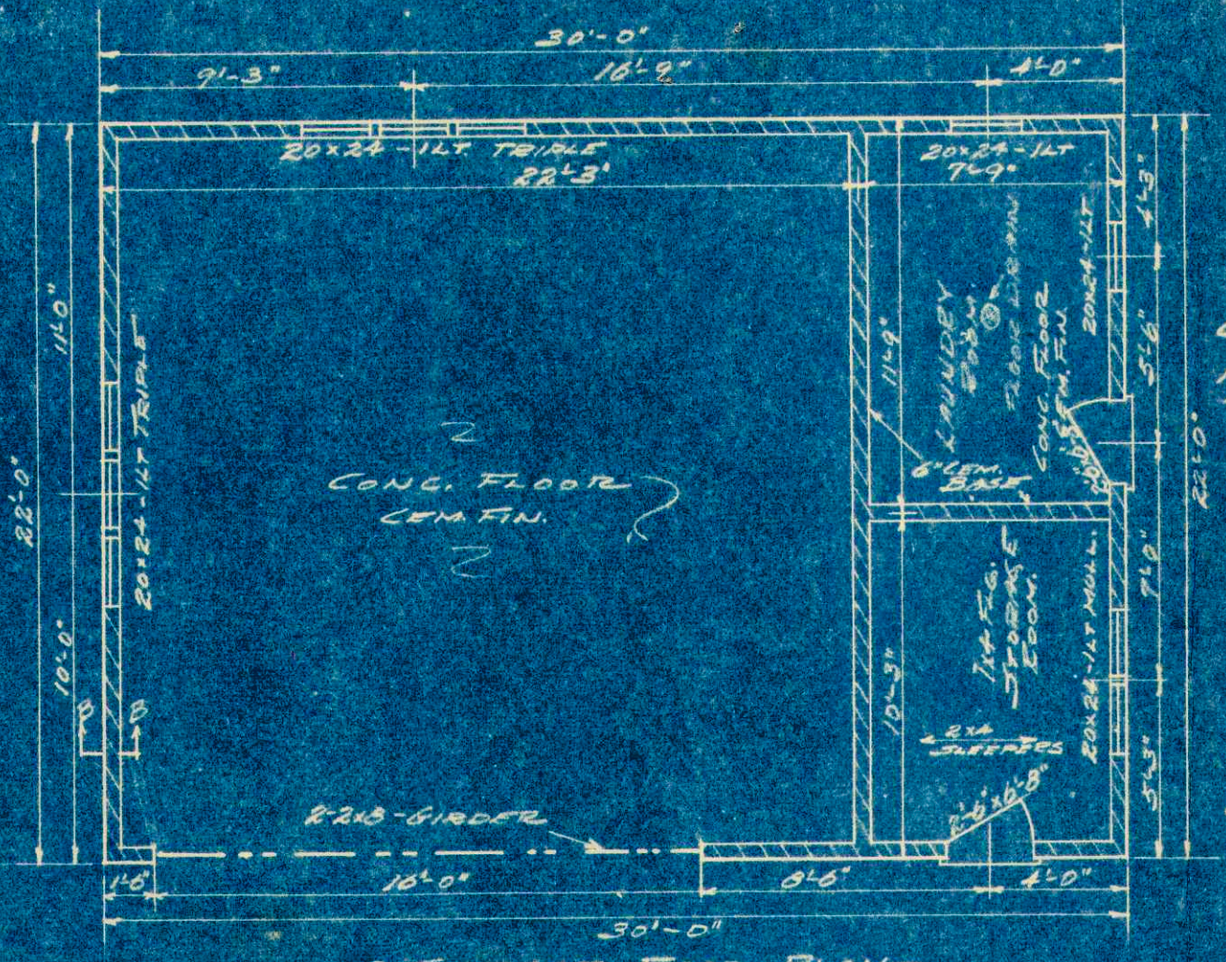

SCALE 3/16" = 1'-0" "GARAGE FLOOR PLAN—

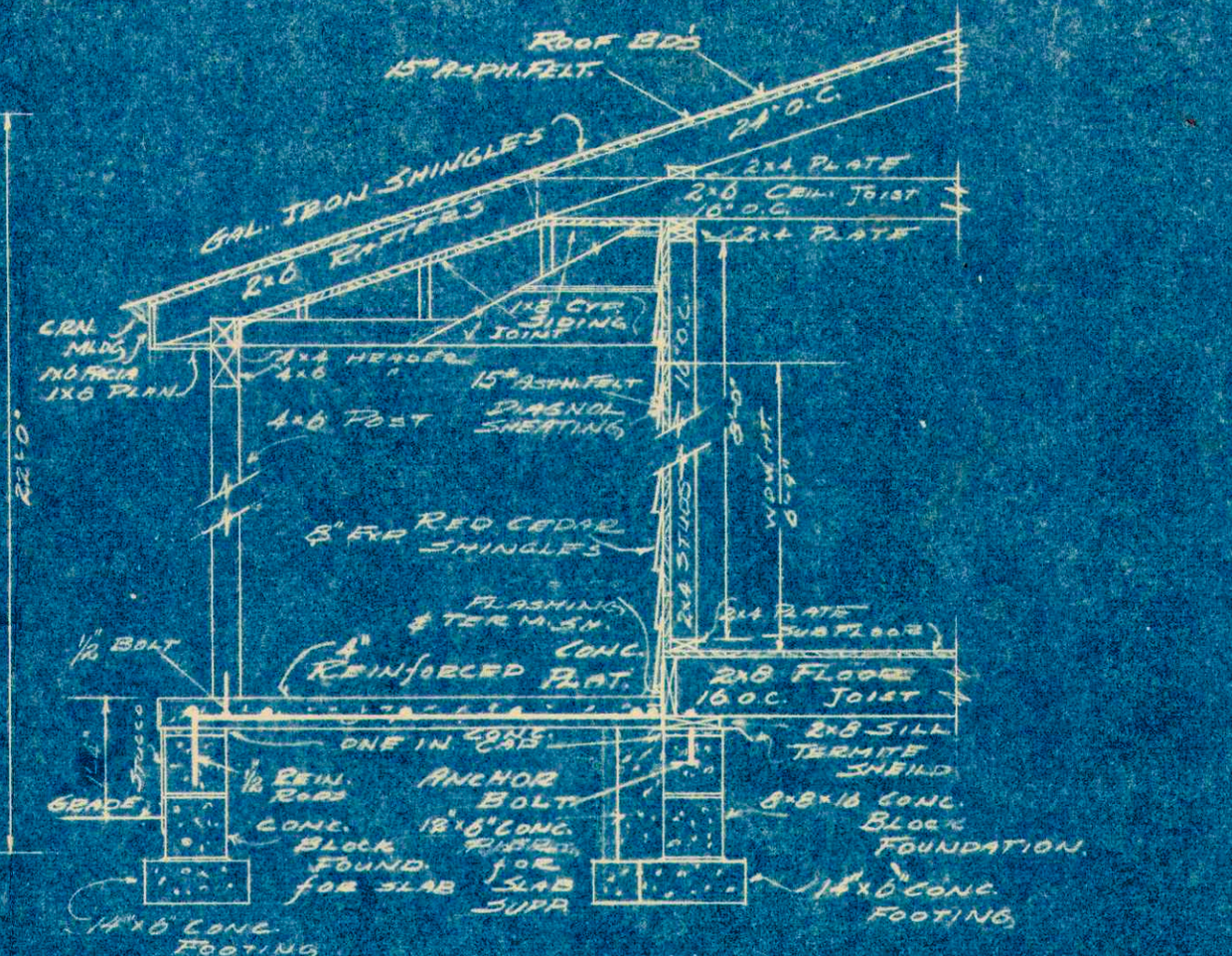

SECTION "AA"
SCALE 1/2" = 1'-0"

WEST ELEVATION of GARAGE
SCALE 3/16" = 1'-0"

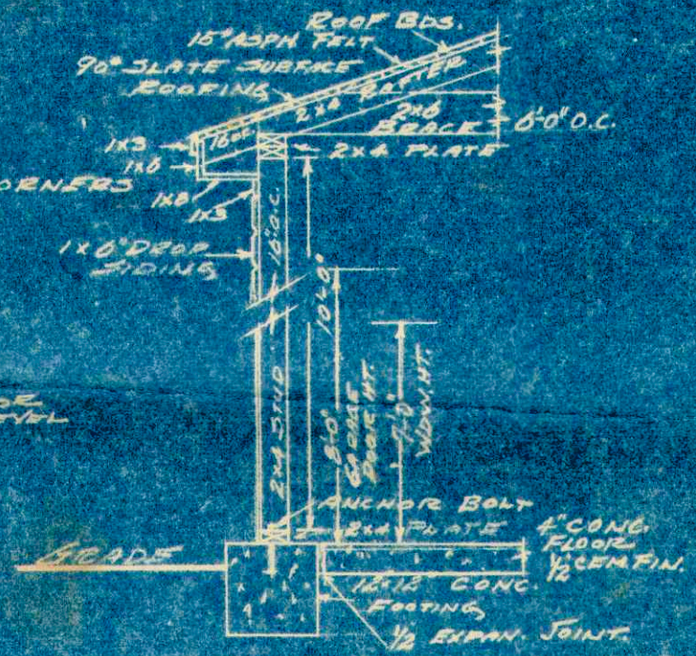

SECTION "BB"
SCALE 1/2" = 1'-0"

City of Lake Worth
Department for Community Sustainability
Planning, Zoning and Historic Preservation Division
1900 Second Avenue North· Lake Worth, Florida 33460 · Phone: 561-586-1687

DATE: April 8, 2016

TO: Members of the Historic Resources Preservation Board

FROM: Maxime Ducoste, Assistant Director for Planning and Preservation
Curt Thompson, Senior Community Planner

SUBJECT: **HRPB NO. 16-02900002**: Consideration of a request by Stateside Partners LLC, for a **Text Amendment** to Section 23.3-14, Downtown (DT) and Section 23.3-6, the Permitted Use Table and Section 23.4-13 of the City's Land Development Regulations (LDRs), to allow Drive Through Facilities as a Conditional Use within the Downtown Zoning District specifically west of Dixie Highway.

Meeting Date: April 13, 2016

BACKGROUND AND JUSTIFICATION:

Stateside Partners ("Petitioner") has submitted a request to amend Section 23.1-12, Definitions, Section 23.3-14, Downtown (DT), Section 23.3-6 – Permitted Use Table and Section 23.4-13 Medium and High Intensity Conditional Uses. The purpose of the amendment is to allow Drive through Facilities as a conditional use within the Downtown (DT) zoning district, specifically west of Dixie Highway.

The Municipal Code of the City of Lake Worth was adopted in 1979 by way of Ordinance No. 79-9 and has been subsequently amended over the past 37 years. Since its inception the Code has been amended to adapt to the changing needs of the City.

On August 6, 2013 the City of Lake Worth adopted Chapter 23 – Land Development Regulations of the Code of Ordinances. Since its adoption in 2013, the City has initiated code revisions to provide clarification, consistency as well as addressing issues that have arisen over time.

The Downtown (DT) zoning district is designed for the commercial core of Lake Worth, primarily along Lake and Lucerne Avenues from Golfview to the Florida East Coast Railroad right-of-way. The DT district is intended to provide the establishment and expansion of a broad range of office, retail and commercial uses, including higher density residential use.... The establishment of certain uses is subject to conditional use review to ensure they will not have a negative impact on nearby residential uses or on the commercial viability of their neighbors.

The Applicant, Stateside Partners LLC, owns several parcels of land to the south of 2nd Avenue North and to the west of South Dixie Highway. The Downtown core of the City of Lake Worth is a critical commercial area of the City that is in need of redevelopment projects. The Applicant is proposing to develop a vacant parcel that will provide infill development along Dixie Highway within the Downtown district.

Currently, the Land Development Regulations do not allow Drive through Facilities within the Downtown District. The purpose of the Zoning Text Amendment is to allow a Drive through Facility as a conditional use for properties zoned Downtown (DT) west of Dixie Highway, while excluding drive through for all Restaurant uses within the Downtown zoning district.

In addition, to ensure compatibility and mitigate any potential impacts on surrounding properties, staff is proposing additional language to be added to Section 23.4-13 – Medium and high intensity conditional uses, which would provide additional requirements for drive through facilities.

The proposed amendments are to add specific language to Section 23.3-14 to restrict drive through facilities use to properties within the Downtown District and west of Dixie Highway. The purpose for restricting the use to the west side of Dixie Highway is due to the particularities of these properties and to their performance. Properties on the west of Dixie Highway are not the same as those properties within the core of the Downtown district. Specifically, the core of the Downtown district is oriented to pedestrian traffic, while the Dixie Highway corridor is geared toward vehicular traffic. There are only a handful of parcels that would be affected by this Text Amendment. Allowing and limiting Drive through facilities on the west side of Dixie Highway will promote redevelopment of several parcels that have been vacant for a long time.

As such, the Petitioner is proposing to amend to the Downtown (DT) permitted uses in the City's LDRs as follows:

Section 23.3-14.c.2.A

2. Principal uses permitted as either administrative or conditional uses.

A. Commercial – medium to high intensity.

i. Commercial Drive Through (excluding all Restaurant uses), west of Dixie Highway.

B. Office - medium to high intensity.

C. Retail - medium to high intensity.

D. Personal services - medium to high intensity.

E. Cultural and artisanal arts - medium to high intensity.

F. Institutional - medium to high intensity.

G. Parking facilities including temporary.

H. Places of worship.

Section 23.3.6 – Permitted Use Table

The modifications to the Permitted Use Table include adding a new use category, Drive Through Facilities, excluding all Restaurant uses and adding it as a conditional use within the MU-East, MU-East 10th & 6th, DT, Mixed Use-Dixie Highway, and Mixed Use-West, Lake & 10th zoning districts. This would be consistent with the zoning categories in which Drive through Facilities are currently allowed as a conditional use.

In addition to the applicant's request, staff is proposing the following definition, and requirements to the Medium and High Intensity Conditional Uses section.

Proposed Language:

Section 23.1-12 - Definitions

Definition: Drive-Through Facility: A commercial facility which provides a service directly to a motor vehicle or where the customer drives a motor vehicle onto the premise and to a window or mechanical device through or by which the customer is serviced without exiting the vehicle.

Section 23.4-13. Medium and High Intensity Conditional Uses

14. Drive-Through Facilities.

(1) Purpose. It is the purpose of this section to provide regulations and standards for the establishment of drive-through facilities as conditional uses through the appropriate decision making authority.
(2) Regulations and standards. Drive-through facilities shall be designed to minimize conflicts between pedestrian and vehicular circulation. The facility, including the stacking lanes, must not be visible from public rights-of-way and shall be subject to the standards listed below.
    a. Separation. Each drive-through lane shall be separated from circulation routes necessary for ingress or egress from the property or access to any parking space.
    b. Drive-through facilities shall be 100 feet from any residential zoning district.
    c. Marking. Each drive-through lane shall be striped, marked, or otherwise distinctly delineated in a manner acceptable to the city.
    d. Queuing and stacking. The queuing or vehicle stacking capacity of a drive-through facility, including a gated entrance to a residential development, shall be at least 100 feet. The minimum distance shall be measured from the centerline of the window closest to the edge of right-of-way from which access is provided. The stacking capacity may be increased based upon individual circumstances as determined by the city.
    e. Drive-through facilities shall not be allowed on any building facade that directly fronts on a public or private right-of-way. On eligible building facades (sides and/or rear) the following design standards are required where windows for drive-through facilities are proposed:
        1. All principal and accessory structures related to the drive-through facilities shall be 100 feet from any residential zoning district.
        2. The building facade shall have windows that occupy no less than 25% of the facade and that are located at the pedestrian level. A maximum of 10% of this 25% may be non-transparent windows.
        3. The building facade shall be modulated and divided into smaller identifiable pieces to articulate the plane of the facade.
        4. The building facade shall have at least one offset having a pitched roof.
        5. Additional landscaping for the screening of drive-through facilities is required in accordance with Article 6, Section 23.6-1 Landscape Regulations.

6. Roofing. Roofs constructed as part of a drive-through facilities shall be consistent with the architectural style, materials, and colors of the principal structure.
7. Noise. Any drive-up or drive-through speaker system shall emit no more than 65 (dB) decibels and at no time shall any speaker system be audible above daytime ambient noise levels beyond the real property lines of the site. The system shall be designed to compensate for ambient noise levels in the immediate area.

CONSEQUENT ACTION:

The decision of the Historic Resources Preservation Board will be a recommendation to the City Commission, which will make the final decision.

STAFF RECOMMENDATION:

Staff recommends that the Historic Resources Preservation Board **APPROVE** the Text Amendment to amend Section 23.1-12, Definitions, Section 23.3-14, Downtown (DT), Section 23.3-6, the Permitted Use Table and Section 23.4-13, Medium and High Intensity Conditional Uses of the City's Land Development Regulations (LDRs), to allow Drive Through Facilities as a Conditional Use within the Downtown Zoning District specifically west of Dixie Highway.

POTENTIAL MOTIONS:

"I MOVE TO APPROVE/DENY **HRPB NO. 16-02900002**: Consideration of a request for a **Zoning Text Amendment** to amend Section 23.1-12, Definitions, Section 23.3-14 Downtown District, Section 23.3-6, the Permitted Use Table and Section 23.4-13, Medium and High Intensity Conditional Uses of the City's Land Development Regulations (LDRs), to allow Drive Through Facilities as a Conditional Use within the Downtown Zoning District specifically west of Dixie Highway.

LOCATION MAP

Attachments:

A. Justification Statement
B. Excerpt of Permitted Use Table

Cotleur & Hearing
Landscape Architects I Land Planners I Environmental
· 33458 · Ph 561.747.6336 · Fax 561.747.1377 · www.cotleurhearing.com · Lic # LC26000535

127 N Dixie Highway
Zoning Text Amendment
Downtown Zoning District
March 9, 2016

On behalf of the Applicant, Stateside Partners LLC, we are requesting a Zoning Text Amendment to the City of Lake Worth Municipal Code, more specifically Section 23.3-14. – DT – Downtown and Section 23.3-6 – Use Table. The purpose of the amendment is to allow Drive Through Facilities as a conditional use within the Downtown zoning district, specifically west of Dixie Highway.

Background

The Municipal Code of the City of Lake worth was adopted in 1979 by way of Ordinance No. 79-9 and has been subsequently amended over the past 37 years. Since its inception the Code has been amended to adapt to the changing needs of the City.

The Downtown zoning district is *designed for the commercial core of Lake Worth, primarily along Lake and Lucerne Avenues from Golfview to the Florida East Coast Railroad right-of-way. The DT district is intended to provide the establishment and expansion of a broad range of office and commercial uses, including higher density residential use.... The establishment of certain uses is subject to conditional use review to ensure they will not have a negative impact on nearby residential uses or on the commercial viability of their neighbors.*

The Use Tables, found within Section 23.3-6 have been amended several times since the adoption of the Code in 1979. More specifically Ordinance No. 2014-02, § 7(Exh. F), 1-7-14 and Ordinance. No. 2014-22, § 11(Exh. J), 9-9-14. The City has initiated a Code revision for this Use Table that is currently up for adoption on the March 22, 2016 City Commission Hearing.

Request

The Applicant, Stateside Partners LLC, owns several parcels of land to the south of 2nd Avenue North and to the west of South Dixie Highway. The Downtown core of the City of Lake Worth has seen several redevelopment projects over the last decade. The Applicant is proposing to develop a vacant parcel that will provide infill development along Dixie Highway within the Downtown district.

Currently, the Code does not allow Drive Through Facilities within the Downtown District. The purpose of the Zoning Text Amendment is to allow a Drive Through Facility, excluding all Restaurant uses within the Downtown zoning district as a conditional use. The Applicant is proposing to modify the Zoning text to allow this use within the same zoning districts in which Drive Through Facilities are permitted as a conditional use and adding the Downtown zoning district as an allowable district. In addition, language will be added to Section 23.4-13 – *Medium and high intensity conditional uses.,* which would provide standards for a drive through.

Contact: Brett Leone
PH: 561.747.6336
E: bleone@cotleur-hearing.com

The proposed Code revisions are to add specific language to Section 23.3-14.c.2.A to restrict the Drive Through Facility use to properties within the Downtown District and west of Dixie Highway. The purpose for restricting the use to the west side of Dixie Highway is due to the performance of the properties to the west of Dixie Highway are not the same as those properties within the core of the Downtown district. The core of the district is scaled to the pedestrian, while the Dixie Highway corridor is geared for vehicular traffic. There are only a handful of parcels that would be affected by this Zoning Text Amendment. Allowing the Drive Through Facility use on the west side of Dixie Highway will promote redevelopment of several parcels that have been vacant for a long time.

Section 23.3-14.c.2.A

2. *Principal uses permitted as either administrative or conditional uses.*

A. Commercial – medium to high intensity.

i. Commercial Drive Through (excluding all Restaurant uses), west of Dixie Highway

B. Office - medium to high intensity.

C. Retail - medium to high intensity.

D. Personal services - medium to high intensity.

E. Cultural and artisanal arts - medium to high intensity.

F. Institutional - medium to high intensity.

G. Parking facilities including temporary.

H. Places of worship.

Section 23.3.6 – Use Table

The modifications to the Use Table include adding a new use category, Drive Through Facilities, excluding all Restaurant uses and adding it as a conditional use within the MU-E Federal Highway, MU-E 10th & 6th, DT, MU-DH, and MU-W Lake & 10th zoning districts. This would be consistent with the zoning categories in which Drive Through Facilities are currently allowed as a conditional use.

The proposed changes to the Use Table can be seen on the following page.

(The remained of this page is left intentionally blank.)

Contact: Brett Leone
PH: 561.747.6336
E: bleone@cotleur-hearing.com

Section 23.3.6 – Use Table

TYPE/USE	SF-R	SF-TF 14	MH-7	MF-20	MF-30	MF-40	MU-E LAKE & LUCERNE	MU-E 1ST & 2ND EDGES	MU-E FEDERAL HWY	MU-E 10TH & 6TH	DT	MU-FH	MU-DH	MU-W LAKE & 10TH	TOD-E	TOD-W	NC	BAC	AI	I-POC	PD	P	PROS	CON	FEC	HOTEL
MEDIUM INTENSITY COMMERCIAL USES - LESS THAN 2,500 SQ. FT.																										
BARS/CLUBS WITH OR WITHOUT LIVE ENTERTAINMENT											A		A	A	A	A			A							
BARS/CLUBS WITH LIVE ENTERTAINMENT											C		C	C					C							
BED AND BREAKFAST INNS	C	C		C	C	C	C	C	C	C	C	C	C						C							
CATERING/CATERER							A						A	A	A	A			A							
CONTRACTOR (OFFICE ONLY, NO OUTDOOR STORAGE YARD)							A	A	A	A	A	A	A	A	A	A			A	A						
CONTRACTOR (OFFICE WITH OUTDOOR STORAGE YARD																				C						
DRIVE THROUGH FACILITIES									C	C			C	C												
DRIVE THROUGH FACILITIES, EXCLUDING ALL RESTAURANTS									C	C	C		C	C												
FINANCIAL INSTITUTION W/ DRIVE THROUGH									C	C	C		C	C	C	C										
FINANCIAL INSTITUTION W/OUT DRIVE THROUGH							A		A	A	A		A	A	A	A										
FINANCIAL MANAGEMENT SERVICES							A	A	A	A	A		A	A	A	A										
FUNERAL HOME/CREMATORY							C	C					C							C						
HOTELS							A		A		A		A	A	A	A										
INDOOR COMMERCIAL RECREATION (REFERENCE ORDINANCE CHAPTER 14)							A			A		A	A	A					A	A						
MOTELS							A		A		A	A	A	A												
MOTEL OR HOTEL EXTENDED STAY											C		C	C					C							
PRINTING SERVICES							A		A		A		A	A	A	A			A	A						
RESTAURANTS W/DRIVE THROUGH							C		C				C	C					C							
RESTAURANTS WITH BAR							C		C	C	C		C	C	C	C		A	C							
RESTAURANTS - TAKE OUT							A	A	A	A	A		A	A	A	A	A	P	A		P					
RESTAURANTS							A	A	A	A	A		A	A	A	A	A	P	A		P					
SINGLE DESTINATION COMMERICAL							A			A			A	A	A	A			A							
SOCIAL SERVICE CENTERS							A	A	A	A			A	A	A	A			A							
STORAGE LOCKERS													A	A	A	A										
VETERINARY OFFICES, W/O KENNELS										A			A	A	P	P			A	A						
VETERINARY OFFICES, W/ KENNELS													C	C					C	C						
WAREHOUSE FACILITIES														A					A	A						
WHOLESALE AND DISTRIBUTION FACILITIES														A					A	A						

Contact: Brett Leone
PH: 561.747.6336
E: bleone@cotleur-hearing.com

In addition to the proposed Zoning Text Amendments listed above, the Applicant is also working with Staff to provide language to add to Section 23.14-13. – *Medium and high intensity conditional uses.* Language will be added to this section to provide standards for Drive Through facilities. For example, the drive through must be located at the rear of the building when located within the Downtown zoning district, include a landscape buffer and have adequate stacking distance. This information will be supplemented to the Zoning Text Amendment application.

Conclusion

On behalf of the applicant and the project team we look forward to working with staff to address the proposed Zoning Text Amendment.

TYPE/USE	SF-R	SF-TF 14	MH-7	MF-20	MF-30	MF-40	MU-E LAKE & LUCERNE	MU-E 1ST & 2ND EDGES	MU-E FEDERAL HWY	MU-E 10TH & 6TH	DT	MU-FH	MU-DH	MU-W LAKE & 10TH	TOD-E	TOD-W	NC	BAC	AI	I-POC	PD	P	PROS	CON	FEC	HOTEL
MEDIUM INTENSITY COMMERCIAL USES - LESS THAN 2,500 SQ. FT.																										
BARS/CLUBS WITH OR WITHOUT LIVE ENTERTAINMENT											A		A	A	A	A			A							
BARS/CLUBS WITH LIVE ENTERTAINMENT											C		C	C					C							
BED AND BREAKFAST INNS	C	C		C	C	C	C	C	C	C	C	C	C						C							
CATERING/CATERER							A						A	A	A	A			A							
CONTRACTOR (OFFICE ONLY, NO OUTDOOR STORAGE YARD)							A	A	A	A	A	A	A	A	A	A			A	A						
CONTRACTOR (OFFICE WITH OUTDOOR STORAGE YARD																				C						
DRIVE THROUGH FACILITIES									C	C			C	C												
DRIVE THROUGH FACILITIES, EXCLUDING ALL RESTAURANTS									C	C	C		C	C												
FINANCIAL INSTITUTION W/ DRIVE THROUGH									C	C	C		C	C	C	C										
FINANCIAL INSTITUTION W/OUT DRIVE THROUGH							A		A	A	A		A	A	A	A										
FINANCIAL MANAGEMENT SERVICES							A	A	A	A	A		A	A	A	A										
FUNERAL HOME/CREMATORY							C	C					C							C						
HOTELS							A		A		A		A	A	A	A										
INDOOR COMMERCIAL RECREATION (REFERENCE ORDINANCE CHAPTER 14)							A			A		A	A	A					A	A						
MOTELS							A		A		A	A	A	A												
MOTEL OR HOTEL EXTENDED STAY											C		C	C					C							
PRINTING SERVICES							A		A		A		A	A	A	A			A	A						
RESTAURANTS W/DRIVE THROUGH							C		C				C	C					C							
RESTAURANTS WITH BAR							C		C	C	C		C	C	C	C		A	C							
RESTAURANTS - TAKE OUT							A	A	A	A	A		A	A	A	A	A	P	A		P					
RESTAURANTS							A	A	A	A	A		A	A	A	A	A	P	A		P					
SINGLE DESTINATION COMMERICAL							A			A			A	A	A	A			A							
SOCIAL SERVICE CENTERS							A	A	A	A			A	A	A	A			A							
STORAGE LOCKERS													A	A	A	A										
VETERINARY OFFICES, W/O KENNELS										A			A	A	P	P			A	A						
VETERINARY OFFICES, W/ KENNELS													C	C					C	C						
WAREHOUSE FACILITIES														A					A	A						
WHOLESALE AND DISTRIBUTION FACILITIES														A					A	A						