CITY OF LAKE WORTH
1900 2nd Ave N · Lake Worth, Florida 33461 · Phone: 561-586-1687

Agenda
Regular Meeting
City of Lake Worth
Historic Resources Preservation Board
City Hall Commission Room
7 North Dixie Hwy; Lake Worth, FL

WEDNESDAY, MAY 11, 2016 6:00 PM

1. Roll Call and Recording of Absences

2. **Pledge of Allegiance**

3. Additions/Deletions/Reordering and Approval of the Agenda

4. Approval of Minutes

   A. February 17, 2016 Special Meeting

   B. March 9, 2016 Regular Meeting

   C. April 13, 2016 Regular Meeting

5. Cases

   A. Swearing in of Staff and Applicants

   B. Proof of Publication

   C. Withdrawals/Postponements

   D. Consent

   E. Public Hearings

      1. Board Disclosure

      2. HRPB Project Number 16-00100082 and 16-01500006: Consideration of a Certificate of Appropriateness (COA) for new construction of an addition, a historic waiver for stairs in the front setback, a variance to allow a building lot coverage above the Code allowance, and pre-construction approval for a historic preservation ad valorem tax exemption, for the existing single-family structure located at 226 South L Street; PCN#

38-43-44-21-15-091-0040. The subject property was constructed c.1925 and is a contributing resource within the Southeast Lucerne Local Historic District.

3. HRPB Project Number 15-00100022: Consideration of a Certificate of Appropriateness (COA) for new construction of an addition to the existing structure at 812 South Lakeside Drive; PCN# 38-43-44-27-01-024-0050. The subject property was constructed in 1942 and is a contributing resource within the South Palm Park Local Historic District.

F. Unfinished Business

G. New Business

1. HRPB Project Number 16-00100092: Consideration of a Certificate of Appropriateness (COA) for exterior alterations including roof, window, and door replacement for the single-family structure located at 402 North Lakeside Drive; PCN# 38-43-44-21-15-428-0 010. The subject property was constructed in 1958 and is a non-contributing resource within the Old Lucerne Local Historic District.

2. HRPB Project Number 16-00100078: Consideration of a Certificate of Appropriateness (COA) for exterior alterations for all 12 units in the multi-family structure located at 208 South Lakeside Drive; PCN#'s: 38-43-44-27-18-000-5130, 38-43-44-27-18-000-4030, 38-43-44-27-18-000-4020, 38-43-44-27-18-000-4010, 38-43-44-27-18-000-3030, 38-43-44-27-18-000-3020, 38-43-44-27-18-000-3010, 38-43-44-27-18-000-2030, 38-43-44-27-18-000-2020, 38-43-44-27-18-000-2010, 38-43-44-27-18-000-1030, 38-43-44-27-18-000-1020, 38-43-44-27-18-000-1010, and 38-43-44-27-01-059-0010. The subject property was constructed in 1971 and is a non-contributing resource within the South Palm Park Local Historic District.

3. HRPB Project Number 16-00100079: Consideration of a Certificate of Appropriateness (COA) for roof replacement to the subject property located at 817 South Palmway, PCN# 38-43-44-27-01-022-0120. The subject building was constructed in 1940 and the property is a contributing resource within the South Palm Park Local Historic District.

4. HRPB Project Number 16-00100049: Consideration of a Certificate of Appropriateness (COA) for roof replacement to the subject property located at 922 North O Street, PCN# 38-43-44-21-15-290-0060. The subject building was constructed in 1952 and the property is a non-contributing resource within the Northeast Lucerne Local Historic District.

5. HRPB Project Number 16-00100075: Consideration of a Retroactive Certificate of Appropriateness (COA) for gate installation for the single-family structure located at 331 Cornell Drive; PCN# 38-43-44-15-06-005-1770. The subject property was constructed c.1925 and is a contributing resource within the College Park Local Historic District.

6. Conceptual Review - HRPB Project Number 16-00100107: Consideration of a Certificate of Appropriateness (COA) for exterior alterations for the subject property located at 1019 North K Street, PCN# 38-43-44-21-15-308-0120. The subject building

was constructed c.1930 and the property is a non-contributing resource within the Northeast Lucerne Local Historic District.

6. Planning Issues

7. Public Comments (3 minute limit)

8. Departmental Reports

9. Board Member Comments

10. Adjournment

11. If a person decides to appeal any decision made by the board, agency or commission with respect to any matter considered at such meeting or hearing, he or she will need a record of the proceedings, and that, for such purpose, he or she may need to ensure that a verbatim record of the proceedings is made, which record includes the testimony and evidence upon which the appeal is to be based. (F.S. 286.0105)

    NOTE: ALL CITY BOARDS ARE AUTHORIZED TO CONVERT ANY PUBLICLY NOTICED MEETING INTO A WORKSHOP SESSION WHEN A QUORUM IS NOT REACHED. THE DECISION TO CONVERT THE MEETING INTO A WORKSHOP SESSION SHALL BE DETERMINED BY THE CHAIR OR THE CHAIR'S DESIGNEE, WHO IS PRESENT AT THE MEETING. NO OFFICIAL ACTION SHALL BE TAKEN AT THE WORKSHOP SESSION, AND THE MEMBERS PRESENT SHOULD LIMIT THEIR DISCUSSION TO THE ITEMS ON THE AGENDA FOR THE PUBLICLY NOTICED MEETING. (Sec. 2-12 Lake Worth Code of Ordinances)

    Note: One or more members of any Board, Authority or Commission may attend and speak at any meeting of another City Board, Authority or Commission.

    All project-related back-up materials, including full plan sets, are available for review by the public in the Planning, Zoning and Historic Preservation Division located at 1900 2nd Avenue North.

CITY OF LAKE WORTH
1900 2nd Ave N · Lake Worth, Florida 33461 · Phone: 561-586-1687

Agenda
Special Meeting
City of Lake Worth
Historic Resources Preservation Board
City Hall Commission Room
7 North Dixie Hwy; Lake Worth, FL

WEDNESDAY, FEBRUARY 17, 2016 6:00 PM

1. Roll Call and Recording of Absences
   The meeting was called to order at: 6:00 pm
   Present were: Chairman Herman Robinson, Vice-Chair Darrin Engel, Judith Just, Tom Norris, Jimmy Zoellner.
   Erin Fitzhugh Sita arrived at 6:01PM
   Also present were: Maxime Ducoste, Planning Zoning Historic Preservation Manager, Curt Thompson, Community Planner; Aimee Sunny, Preservation Planning Coordinator; William Waters, Director of Community Sustainability; Carolyn Ansay Board Attorney; Board Secretary Sherie Coale.

2. **Pledge of Allegiance**

3. Additions/Deletions/Reordering and Approval of the Agenda
   None
   Motion to approve: T. Norris; J. Zoellner 2nd Ayes all/ unanimous.

4. Approval of Minutes
   None

5. Cases

   A. Swearing in of Staff and Applicants
      Board Secretary swore in Staff & Applicants

   B. Proof of Publication
      Motion to accept & approve proof:
      Ayes: all, unanimous.

   C. Withdrawals/Postponements
      None

   D. Consent
      None

E. Public Hearings

1. Board Disclosure – Ex Parte communications
   E. Fitzhugh Sita- had no communication or contact.
   D. Engel recused himself due to employment with REG Architects. His attendance was duly noted.
   J. Just – received a message and did not respond.
   H. Robinson spoke with John Szerdi, Jim Tebbe, Wes Blackman, Charles Celi, Ed Grimm
   T. Norris-had a call from an Architect and did not respond to him.
   J Zoellner- had a call from John Szerdi and did not respond to him.

F. Unfinished Business
   None

G. New Business

1. HRPB Project# 15-01400009 Major Site Plan to renovate and redevelop the Historic Gulfstream Hotel and related properties, including an application for the Sustainable Bonus Incentive Program. The subject site is +/- 79,304 square feet located at 1 Lake Avenue, 11 Lake Avenue, and 12, 14, 20, 22, and 24 South Lakeside Drive.

2. HRPB Project# 15-00500013 Conditional Use Permit to allow for the renovation and redevelopment and expansion of the historic Gulfstream Hotel and accessory uses within the Downtown (DT) Zoning District.

3. HRPB Project# 16-01500001 Setback Variance for the location of an electric utility transformer.

4. HRPB Project# 15-00100217 Certificate of Appropriateness (COA) for Exterior Alterations to the existing historic Gulfstream Hotel.

5. HRPB Project# 15-00100216 Certificate of Appropriateness (COA) for an Addition to the existing historic Gulfstream Hotel, including a Historic Waiver.

6. HRPB Project# 15-00100215 Certificate of Appropriateness (COA), for New Construction of a new hotel structure and parking garage, including a Historic Waiver.

7. HRPB Project# 15-00100214 - Certificate of Appropriateness (COA) to allow the demolition of two buildings located at 14 S Lakeside Drive.

Staff: William Waters, Community Sustainability Director began the presentation and acknowledged the opportunity for public speaking at the end of the meeting. The record will include all staff reports, powerpoint presentations, and back up documents submitted by the applicant on four (4) different occasions as well as justification statements. By providing a summarization of the projects, William indicates this is the highest value, most complicated and largest project Lake Worth has ever had to come before a board. The Board will function as a Planning and Zoning Board for three (3) cases and the balance of the cases (4) as the HRPB Board, he will assist with the different

code portions required for the different review criteria. Director details the parking, setbacks for the Downtown district.

Applicant: Ms. Bonnie Miskel requests to give a full presentation rather than case by case.

Director discusses the historic significance and how it can achieve sustainability, points out two other Palm Beach County hotels (Breakers and Boca Raton Resort & Hotel) and how they have successfully sustained the historical aspects of the hotels in light of preservation as well as economics.

Tim Bravis, JRA architect, historic planner (for the applicant), discusses harmonious tendencies. Discusses massing, features.

Board: E. Fitzhugh Sits expresses interest in hearing about not meeting setbacks.

J. Just asks about meeting space.

Applicant discusses floor space of the annex and original building. Primary valet is through historic hotel and transfer to annex, but there also exists a secondary valet at the annex. Second floor original beginning of the rooms. The pool surround (2nd Level) reaches over the alley.

Board asks about the lack of shade trees.

Don Skowron Landscape Architect - They are able to save (relocate) 2 oak 12-15 caliper 3 anchor points. 2nd floor green is not illustrated on these plans, but indicates there is substantial green on the 2nd floor.

Tim Bravis indicates the self-parking is first floor only, balance of parking garage will be valet, indicates the parking requirements have exceeded code requirements.

Staff indicates FDOT will dictate the valet parking on Fed. Hwy.

Board: concurs that parking on 1st Avenue is an issue (routing all traffic south). H. Robinson inquires about greenspace between parking and annex and inaccessibility. J. Just asks about parking for employees. Discusses ensures regarding the use of a fence for security (CPTED) (crime prevention through environmental design). T. Norris asks about moving the transformer, he is not comfortable with the building to the extent the code allows placing amenities on rooftops.

Ms. Miskel - The shifting of the annex forward on the lot would remove the benefit (highlight) as moving east along Lake Ave. By shifting the "H" shape south the vistas are better from each building. Bonnie continues with variance criteria review. The second waiver request is for an addition and wraparound to tie it in to the old structure so that addition appears planned.

Board: T. Norris concurs it looks good. H. Robinson would like the dumpster under cover to be watertight since dumpster is a rollout and will be moved over sidewalk to the truck.

Ms. Miskel indicates the two (2) buildings occupying the site have been vacant for quite sometime. Staff mentioned relocation of one structure, the other structure does not have sufficient structural integrity to be moved.

Presentation redirected back to the variance.

Conditions of Approval – Tim Bravis discusses original structure and National Park Service guidelines. Preserve, restore, replace is the last resort.

Board: E. Fitzhugh Sita asks for hardship summary. Ms. Miskel said it could have been broken into 2 but it would still necessitate a variance request. And really had no other place to put it with the addition. Variance request is for nine (9) feet. Added extensive lushly landscaped buffer/ screening. Erin asks about the length of the variance, not the entire length. Ms. Miskel can be very restrictive and ask for only the minimum required 5 foot variance be provided exclusively for the transformer. In conformance with the plan. Essential service, mechanical equipment. Staff guided as this is for an essential service.

Public Comment:

Jim Tebbe (15 S Golfview Rd #701) In favor of project being built. Parking is an issue.

Mary Ann Polizzi (1529 S Palmway) Loved the old Gulfstream, spoke of Finnish population. Events with no hotel. In favor and believes those against the project are against Lake Worth.

Lynn Anderson (2204 Lake Osborne Dr) In favor of the hotel. Would like height restricted to 45 feet. Go back to charter height.

Charles Celi (501 S Golfview #501) would like transformer moved as he would see it every day. Would like a redesign of parking garage.

James Walker (818 N Golfview Rd) would like project to move forward, other previous developers have not followed through.

Michael Fox (1609 North D St) Hotel needs revitalization questions how long can "we" hang on to "our little town" Fix the hotel and move forward.

Mary Watson (1817 Montague St) voted for the charter and would like the height restrictions held.

Gael Silverblatt (414 North O Street) would like to know percentage of shade to palm trees, security issues, believes the annex looks too plain.

Rick Gonzales REG Architects speaking on behalf of Hudson Holdings states many cities are in a renaissance mode and sustainability. Bring back economic vitality. References the recently opened Hilton in downtown West Palm Beach.

Tammy Panza (160 North L Street) would like the parking at Bryant Park to be preserved. Very happy to see this move forward. Height is ok and says the applicant has not gone to the full extent of the possible height. Stop chasing off investors.

Teresa Miller (829 N Lakeside) quotes a PB Post editorial. End the race to the bottom.

Martin Welfeld (829 N Lakeside) approves of the project.

Rosanne Malakates (101 S Lakeside Dr) Scale and density. Did not speak to the original building. Work with what is there. Parking would not be an issue or other issues if the there was no addition or second hotel. Enters document into the record, given to Chair.

Wes Blackman (241 Columbia Dr) Gives some history of hotel, that it is an obsolete property, does not meet current marketplace demands/desires, in favor of project.

Neily Buff (819 N Lakeside Drive) It is only data that matters, people speak from the heart but this is a business. A heart decision vs a business decision. That the extra floor is needed, is a viable business decision

Greg Rice (511 Lucerne Ave) echoes the sentiment of being happy Hudson Holdings are in FL Speaks to the height of 3 bldgs in Lake Worth over 50 feet, no need to worry about becoming Miami. City populace needs to get in the lifeboat. This is a Historic precedent about to be set.

Laurel Robinson (114 Oceanbreeze) egress dumpster and crime prevention needs a good review. Support the hotel and setback. Keep the palms.

Linda Mahoney (131 N Golfview) violates City charter. Traffic and height are issues. Lighting will diminish quality of life and noise violations will occur. Retail will make it less friendly pedestrian wise. Against this plan as presented.

Joann Golden (502 N Palmway) Flooding, trains, traffic, climate change, lack of pedestrian safety. Developers bring plans fast and furious.. Stick to charter.

Richard Dersey (720 S Palmway) glad the applicant filed suit against City. Can fill shops and rooms.

H. Robinson read letter into record.

Anthony Marotta (327 N Lakeside) In favor of project, can only get married at the newly renovated Gulfstream.

William Waters read email into record (728 N Lakeside) Fredericke Mittner- 18 years as a Lake Worth resident and Historic Planner in favor.

Public Comment Complete

Recess called by the chairman at 8:51 pm

Reconvened at 9:00 pm

Staff: William Waters: code requires bedchambers below the 4th floor must have windows and there are existing rooms on the floor plan as such. Keep this in mind as it may have some effect on the appearance. M. Miskel states it will be refined. William Waters indicates it may arise as an issue.

Board: J. Just mentions staff parking and traffic. Ms. Miskel responds currently there is no "flag" so they have designed it to attract a flag which no flag would come without sufficient parking. The applicant is not designing for failure.

Parking ratio William states LW parking code, since it is historic it is vested. Requested a traffic management plan for the location, as a traffic statement not required. Ms. Miskel indicates no issue with the traffic management plan, clarifies the flag is Curio by Hilton

Steve Michael: franchisee reservation and HiltonHonors system only, Signage will be Gulfstream.

Board: E. Fitzhugh Sita: one of the downsides of the developmental progress is traffic increases and that should be expected. Not just here but anywhere. We need to tell them now if Board wants another floor.

T. Norris questions whether the Traffic Management Plan should be provided prior to approving the extra floor.

Applicant: Ms. Bonnie Miskel, speaking as an attorney, indicates applicant has met code, the law is the law, could pro-offer then renegotiate at a later date. We cannot require them to provide above code.

Staff would review TMP and administratively approve.

Board: H. Robinson would like to discuss trailer parking.

E. Fitzhugh Sita asks about more room for 1st avenue.

3:08:03

William Waters indicates the balance of the street is the real issue.

T. Norris wants to put the planning on hold tonight and listen to Historic presentation. Would like to hear from A. Sunny, Historic Planning Coordinator.

Rick Gonzalez speaks about tax credits and deal breakers. Belle Glade city hall almost lost their tax credits due to something as simple as mullions. Disputes the need for handicap access at center.

H. Robinson dislikes the retail location, Ms. Miskel concurs and would gladly remove. William Waters addresses retail activity. Discussion by Board and applicant to remove retail from garage.

3:44:19

Applicant: Retail in the garage was not the preference.

Board: Would like the retail relocated to the front façade of the 1st floor of the annex. The best place would be on the street frontage on Lake.

Applicant would agree to move retail moved to the annex 1st floor and confined to a corner. Would be more comfortable with approximately 1,000 square footage of retail. Both parties agree to 17 foot setback instead of 22. William Waters asks for symmetrical expansion of newly relocated retail space. However the balance of the building is almost 50 feet from the street. Bonnie indicates moving the mass of the building forward it is in conflict with their attempt to showcase the side of the historic Gulfstream Hotel.

Motion: E. Fitzhugh Sita #15 01400009 with staff conditions as proposed plus 1K sq feet retail in annex #5 landscape 2 relocated shade trees; staff reveiew landscape plan between parking garage and annex CPTED landscaping. Require annex building to go to 17 ft setback, remove retail wrap from garage. T. Norris 2nd. Ms. Miskel asks for clarification about conditions. Was the sustainable bonus overlooked and 111k performance bond.

Motion amended E. Fitzhugh Site to include, T. Norris 2nd concurs. And amends again motion
Vote: All Ayes. /unanimous.

Conditional Use: HRPB 15-00500013 amend condition #2 which refers to PZB rather than HRPB

E. Fitzhugh Sita asks about Traffic Management Plan.

J Zoellner asks about traffic as it is a huge concern.

T Norris: all buildings on grade, not ½ below grade.

Public comment: Linda Mahoney 10 pm end of events in Bryant Park.

Wes Blackman - no baseline for decibels due to hotel not open at all.

Joann Golden- rooftop appurtenances.

Greg Rice- General Manager will not allow noise, they are self-regulating.

Bonnie indicates the code protects the citizens.

Public hearing closed. 11:03 PM.

Motion: E. Fitzhugh Sita motions to approve with traffic management plan and traffic study not earlier than 6 months after, upon Certificate of Occupancy for the annex. Condition requested by Chair regarding full dumpster door, waterproof and plan on utilization. Valet on upper levels.

J. Zoellner 2nd motion.

Vote: Ayes all unanimous.

Caroyln Ansay, Board attorney reiterates that staff and applicant previous presentations stand for the record.

Motion: #16-1500001 setback E. Fitzhugh Sita amended to proposed setback be only for essential electrical service equipment, electric service utility, including screening. J. Just 2nd

Vote: Ayes all, unanimous.

#15-00100217 exterior alterations William Waters clarifies conditions and not enough detail, if Board would like to transfer that authority to staff however keep in mind far simpler projects have been required to be reviewed by Board.

Other items cannot be heard without approval of HRPB#15-00100217.

Board Attorney advises that we should have a conversation with applicant regarding a continuance. Ms. Miskel allows that March 9 would be a workable date. No further noticing required since it is a continuance.

Public comment: none

Motion: T. Norris continue to date certain HRPB 217 (March 9 6:00 PM) E. Fitzhugh Sita 2nd

Vote: Ayes all, unanimous.

Motion: E. Fitzhugh Sita continue to date certain HRPB 216 J. Just 2nd

Vote: Ayes all, unanimous.

#15-00100215 discussion William Waters indicates it is desirable to go with Art Deco look as opposed to Spanish Revival. T. Norris remarks about the idea of transitioning to Art Moderne. No brown color.

Motion: E. Fitzhugh Sita to continue to date certain HRPB #15-00100215 J. Just 2nd

Vote: Ayes all, unanimous.

Public comment: none

Motion: J. Just to continue to date certain HRPB # 15-00100214 to March 9 T. Norris 2nd

Vote: Ayes all, unanimous.

Public comment: none

6. Planning Issues
   None
7. Public Comments (3 minute limit)
   None
8. Departmental Reports
   None
9. Board Member Comments
   None
10. Adjournment
    Motion to adjourn: H. Robinson, 2nd by E Fitzhugh Sita.
    Vote: Ayes all, unanimous
    Meeting adjourned: 11:35 PM

Attest: _____

Herman Robinson, Chairman

Submitted By: _____

Sherie Coale, Board Secretary

Minutes Approved: _____

Date

CITY OF LAKE WORTH

1900 2nd Ave N · Lake Worth, Florida 33461 · Phone: 561-586-1687

Agenda
Regular Meeting
City of Lake Worth
Historic Resources Preservation Board
City Hall Commission Room
7 North Dixie Hwy; Lake Worth, FL

WEDNESDAY, MARCH 09, 2016 6:00 PM

1. Roll Call and Recording of Absences

   Present: Chairman Herman Robinson Jimmy Zoellner, Tom Norris, Judith Just, and Vice-Chair Darrin Engel.

   Also present were: William Waters, Director for Community Sustainability; Maxime Ducoste, Planning Zoning Preservation Manager; Aimee Sunny, Preservation Planning Coordinator; Curt Thompson, Community Planner; Sherie Coale, Board Secretary.

   Erin Fitzhugh Sita arrived at 6:12 pm.

2. Pledge of Allegiance

   Led by the Chairperson

3. Additions/Deletions/Reordering and Approval of the Agenda

   520 S. Palmway to continue to April 13, 2016 meeting.

   Motion: by J. Just, 2nd D. Engel to date certain.

   Vote: Ayes all, unanimous.

   Reorder G.1. - 22 S M Street to be heard prior to unfinished business.

   Motion: to re-order J. Just 2nd . Norris.

   Vote: Ayes all, unanimous.

4. Approval of Minutes

   A. October 2015 Meeting Minutes

   Motion: to approve D. Engel, 2nd J. Zoellner

   Vote: Ayes all, unanimous.

   B. November 2015 Meeting Minutes

   Motion: to approve D. Engel, 2nd J. Zoellner

   Vote: Ayes all, unanimous.

   C. December 2015 Meeting Minutes

   D.Engel suggests the following corrections: Marian Cone comments should be indicated as part of public comment, clarify Marian Cone as National Historic Preservationist, D. Engel states he did not say that “5V crimp is not the longest lasting”.

Motion: to change and approve D. Engel, 2nd J. Zoellner
Vote: Ayes all, unanimous.

D. December 2015 Joint Workshop Minutes
Tabled to next month

E. January 2016 Meeting Minutes
Motion: to approve: D. Engel, 2nd J. Zoellner
Vote: Ayes all, unanimous.

5. Cases

A. Swearing in of Staff and Applicants
All those present who expressed a desire to speak were sworn in by Board Secretary.

B. Proof of Publication

1. Lake Worth Herald

2. Palm Beach Post

C. Withdrawals/Postponements : None

D. Consent : None

E. Public Hearings

1. Board Disclosure

a. Form 8B
b. D. Engel recuses himself due to his employment with REG Architects working on F. 1,2,3,4.
c. H. Robinson spoke with John Szerdi and does not believe it will impede nor influence his objectivity.

Item G.1 (reordered and heard at this time).

F. Unfinished Business

1. HRPB Project # 15-00100217 Certificate of Appropriateness (COA) for Exterior Alterations to the historic Gulfstream Hotel.

Staff Presentation: William Waters, Director of Community Sustainability Department reviews/refreshes Board and public with respect to previous approvals and items to be heard at this time. The Director enters all staff reports, powerpoint presentations and materials provided at the February 17th meeting and at this meeting as part of the official record for this meeting. Indicates the applicant and staff have worked very diligently, cooperatively and expeditiously to bring forth the revised plans for this meeting. Changes include the streetscape, the annex façade with art deco inspiration more definitive, would not qualify for the historic waiver, on its own

merits. LDR guidelines and downtown thoroughfares, the intent is to have two (2) story facades on Lake Avenue. The crossover bridge continues to need work. The overall height of the garage is lowered, with 50 additional parking spaces provided with an added floor. The parking garage is shown with the retail element eliminated. Greenspace removed, and building moved closer to the street.

Board Comment: E. Fitzhugh Sita asks about the number of wood windows vs aluminum windows. Director William Waters indicated the architect was helpful in identifying the wood windows set for preservation. T. Norris asks about what was in the rear of the hotel when built, pool or garden? Improvements made in 50's. Not a lot of documentation and many buildings are no longer there in the vicinity that were part of the Gulfstream; also likes open space concept of gardens and at-grade pool, cites the other "era" type hotels Chesterfield and Brazilian Court.

H. Robinson dislikes the garbage dumpster location, has no appreciation of the ADA feature in the front of the project. Director William Waters reminds Board the site plan was previously approved and the Old hotel will most likely be open and operational prior to the annex being constructed.

Applicant: Tim Gravis architect- indicates the applicant is in agreement with location and has been working with staff since last meeting. It is in the most logical space and keeping within ADA compliance requirements. Director William Waters indicates this was part of the approval of the site plan at the previous HRPB meeting. H. Robinson asks about measurement of exhaust, staff indicates there are performance specs for odors and noise being emitted from the site.

Applicant presentation: Nothing additional to add. Ms. Bonnie Miskel indicates willingness to work with staff to attempt to relocate the lift as far west as possible without violating ADA requirements.

Board: J. Just asks whether consideration has been given to the bas relief or terra cotta element of rooftop façade. Director William Waters indicates if sufficient photo documentation can be acquired regarding detail, it could be restored. Board members generally comment on mosaics and railing detail being provided.

E. Fitzhugh asks about Tax credit. Steve Michael (previously sworn in). Submitted application for tax credit for historic credits by Park Service

Public comments:

Lynda Mahoney (131 N Golfview Rd) objects to all projects. Believes the rooftop usage will increase a non-conformity. Provides some history with regard to the pool location putting greens, and other structures co-owned by the condos and hotel.

Joann Golden (502 N Palmway): objects to height due to charter amendment, disagrees with a "canyon effect' of downtown created by large buildings; questions "energy star" approval (believes it concerns appliances), the project seems to be short on sustainability, long on profitability; worries about climate change, sea level rise.

Teresa Miller (829 N Lakeside): Is in favor, bring on the jobs, get it on the tax rolls. Appreciates the detailed work, integrity of Staff and Board to bring this project forward.

Applicant comments: Ms. Bonnie Miskel comments the rooftop uses vs structure. Uses have existed, vested and conforming for decades, there is flooring on the roof. Height of elements which extend above the rooftop is structure, not a non-conformity. Umbrellas etc. are simply portable amenities that can be moved and are within the normal use within the scope of a hotel operation.

Motion: E. Fitzhugh Sita motions to approve with the following conditions:

1) All decorative railings, parapets, pent roofs, medallions, and other decorative details shall be designed to be compatible with the Mission Revival style of architecture, and shall be subject to Staff review and approval prior to permitting.
2) The specific design, configuration, and location of the accessible lift shall be subject to Staff review and approval prior to permitting. If the location of the lift is required to be as it is shown on these drawings, then the proposed lift design shall emulate, to the extent possible, the current configuration of a low knee wall with a balustrade, in order to preserve the symmetry and integrity of the central 5 bays on the North elevation.
3) All existing wood windows and doors shall be repaired and restored.
4) All new windows and doors shall use exterior raised applied "putty" or "ogee" style muntins. No flat or internal muntins shall be permitted. No reflective mirrored glass shall be permitted.
5) All intermediary walls in the guest rooms shall line up with a window mullion, a door mullion, or a wall. These walls shall not be located in the middle of windows, as this would adversely affect the exterior appearance of the historic structure. The reconfiguration shall be subject to Staff review and approval prior to permitting.
6) The clerestory windows in the existing hotel lobby shall remain and be incorporated into the lobby design, subject to Staff review and approval prior to permitting.
7) All balustrades, planter boxes, decorative medallions, parapets, window and door trim, and other decorative elements shall be preserved and restored.
8) The Applicant shall finance and install an official State Historic Marker for the historic Gulfstream Hotel. Staff will coordinate with the Applicant regarding the text for the sign and the State Historic Marker review program, as well as determine the most appropriate location for the sign installation within the site plan.

2nd by J. Zoellner

Vote: Ayes all, unanimous.

2. HRPB Project # 15-00100216 Certificate of Appropriateness (COA) for an Addition to the existing historic Gulfstream Hotel, including a Historic Waiver.

   Staff Presentation: Director William Waters presents detail changes to additions (bridge and pool) on hotel 1, 4, 6, 7, 8, 9 windows. South elevation continues to need additional refinement such as tiles or mosaics. Refining, preservation of clerestory windows, the bridge element is much improved but continues to need additional refinement leading to a more delicate nature (lighter). The pool deck is not visible from street.

   J. Just asks about lighting (sconces) on front of annex.

   Applicant Presentation: Tim Gravis answers questions regarding arch detail, mosaics and B. Miskel considers soliciting from community. CRA has already vetted with the LULA project. Applicant may want to contact the CRA.

   Board: T. Norris views the lack of walkway through this building to Bryant Park as a shortcoming, lost opportunity.

   Motion: E. Fitzhugh Sita motion with the following conditions:

1) All decorative railings, parapets, pent roofs, medallions, and other decorative details shall be designed to be compatible with the Mission Revival style of architecture, and shall be subject to Staff review and approval prior to permitting.
2) All new windows and doors shall use exterior raised applied "putty" or "ogee" style muntins. No flat or internal muntins shall be permitted. No reflective mirrored glass shall be permitted.
3) The clerestory windows in the existing hotel lobby shall remain and be incorporated into the lobby design, subject to Staff review and approval prior to permitting.
4) The south elevation could be further refined to provide enhanced decorative features including murals, mosaics, fountains, or a dog bar, subject to Staff review and approval prior to permitting. The Applicant shall collaborate with the Community Redevelopment Agency's LULA program with regards to murals and other artwork.

5) The sky bridge structure could receive additional decorative details and brackets to support the structure, subject to Staff review and approval prior to permitting.
6) All balustrades, planter boxes, decorative medallions, parapets, window and door trim, and other decorative elements shall be preserved and restored.

J. Zoellner 2nd.

Vote: Ayes all, unanimous.

Public comment: None

.

3. HRPB Project# 15-00100215 Certificate of Appropriateness (COA), for New Construction of a new hotel structure and parking garage, including a Historic Waiver.

Staff Presentation: Director William Waters presents: Bas Reliefs presented, would like to better refine the medallions, fretwork over the entrance needs to be lightened up (not so heavy) and not be in conflict with the signage. Elevation on S Lakeside has been greatly simplified. Architect will continue to resolve FL Building Code issues with respect zero exterior egress (window) for some of the guest rooms. Lake Avenue elevations complimentary and harmonious with a pinkish coloration with different shades. Sustainable Bonus, provided documentation by applicant and how Energy Star can be applied. Asking to post a performance bond commensurate to an amount equal to the balance of the sustainable bonus amount with ½ already being met. Solar panels are not seen and there are green roof elements for water retention. Ground floor to be built one foot above FEMA standard. Anticipates the existing hotel drainage issues will be improved upon by applicant.

Applicant Presentation: Tim Gravis agrees the bridge detail will continue to experience improvement. Discussion regarding the 2nd floor "patio" outside of the 4 suites. Ms. Miskel speaks to segregating the area immediately off the stairwell with maximum vistas, emphasizing the need for expectation of privacy outside the suite areas. Applicant is not adverse to a 2nd floor colonnade provided it does not impede the client ability to acquire Energy Star, tax credit nor impede the Historic tax credit application. Staff proposes a 2nd floor stepback colonnade which would allow the 3rd floor a larger balcony as well.

T. Norris: empathizes with applicant that you must show deference to the historic aspects.

J. Just questions number of egresses off balcony. Lakeside facing north detail.

J. Zoellner questions retail space not fronting on Lake Ave. Delivery truck space. J. Just asks about lighting, staff mentions the upcoming LDR changes with respect to accent lighting. J. Zoellner asks about the 2nd floor access to the pool (elevated walkover).

Director William Waters described changes to garage such as additional floor added with overall height lower than the allowed height, perhaps some added grill work to alleviate the appearance of a garage.

H. Robinson asks about sound dampening for elevated auto ramps. Ms. Miskel reminds all of the previous meeting with the condition that a traffic management study be provided at the six (6) month period. If the need was demonstrated at that point in time, they will address the need but the project it is not currently parking deficient.

H .Robinson asks about whether laundry is outsourced or in-house. Tim Gravis indicates there will be a small in-house laundry in the annex. Kitchen exhaust is an ongoing review by applicant at this time. Director William Waters states that all mechanical must be screened. Intent is not to vent any exhaust toward condominium building.

Public Comment: Marian Cone, historic preservationist, cautions that the second building needs to take a backseat to the Historic Hotel, there is too much agrandissement with the annex.

Richard Stowe 414 N Federal Highway- has concerns with height, bulk and scale, unbalanced on property has a canyon effect. Fails the test of a world-class hotel.

Peggy Fisher 508 North A Street- in favor, private parking garage, not for public comment.

Public comments closed.

Motion: E. Fitzhugh Sita 2nd by J. Just with the following conditions:

1) All decorative detailing including mouldings, trim, spandrel panels, transoms, bas relief, medallions, railings, balcony brackets, and other decorative elements on the hotel annex and the parking garage structures shall be further refined to reflect the richness and exuberance of the Art Deco architectural style. The design and detailing shall reflect of hierarchy and differentiation of spaces, and the existing "sunburst" designs shall be adjusted accordingly. Additional decorative elements including applied brick, cast stone, mosaic tiles, or polychrome elements could be added to the structure. All decorative detailing shall be subject to Staff review and approval prior to permitting.
2) The detailing of the entrance on Lake Avenue could be further defined and enhanced in order to further define this as a primary building entrance. Specific details for this entrance have not yet been provided, and shall be subject to Staff review and approval prior to permitting.
3) The colonnade facing Lake Avenue shall be revised so that each group of four openings shall be symmetrical around a central axis, the end piers shall have equal or greater width than the interior piers, and additional decorative elements, such as bas reliefs, shall be added above the colonnade openings where space allows, subject to Staff review and approval prior to permitting.
4) The size and specific location of the proposed 1/1 windows and French doors may be adjusted as needed to meet building code requirements. French doors shall not be installed in an inoperable or fixed condition, instead the design shall be adjusted as needed to incorporate windows or add balconies. All window and door alterations shall be subject to Staff review and approval prior to permitting.
5) The windows and doors shall not have reflective mirrored glass.
6) The parking garage structure openings shall be further refined to incorporate decorative screening, masonry units, or other decorative feature in order to provide a visual barrier between the parked cars and pedestrian traffic on South Lakeside Drive and 1st Avenue South, subject to Staff review and approval prior to permitting.
7) The asymmetrical design of the parking garage west elevation may be adjusted as needed to resolve the enhanced decorative openings or create an axis with the properties across South Lakeside Drive, subject to Staff review and approval prior to permitting.
8) If feasible, public access applicable to appropriate codes shall be provided at the Northeast corner of the second floor deck.
9) If feasible, per the Federal Income Tax Credit Application, study of additions of a second floor colonnade shall be provided.

Vote: Ayes all, unanimous

Applicant Comments: Ms. Bonnie Miskel requests that the minutes, applicant submittals, and testimony from the February 17th meeting be included in this testimony and entered into the record.

4. HRPB Project # 15-00100214 Certificate of Appropriateness (COA) to allow the demolition of two buildings located at 14 S Lakeside Drive

Staff Presentation, Board Comments and Applicant presentation: Director William Waters recommends demolition of one building but would like to see the other building relocated. Proposed a condition (suggestion only) that the applicant attempt to move one building. J. Just questions why no one has previously come forward. Director William

Waters indicates there were previously two (2) interested parties but the property was not available for purchase, now there are three (3) interested parties, and the property is available. H. Robinson would like to limit advertising time. Director William Waters indicates it is four (4) weeks. Ms. Miskel requests a condition requiring relocation fees be capped at equivalent cost of demolition and would limit the time span to 4 months from end of four (4) week advertising period. Director William Waters indicates it a high possibility of coming before HRPB again due to the probability of being relocated to HRPB area. J. Zoellner asks applicant about time line for phases. Steve Michael indicates the Historic property will open and operate on its own while annex is under construction and estimates late 2017 for the Historic Gulfstream.

Public Comment: None

Motion: E. Fitzhugh Sita 2nd J.Just with the following conditions:

1) The building permit for demolition of the two structures shall not be issued until the COA for new construction and redevelopment of this site has been approved.
2) The building permit for demolition shall not be issued until the two-story Art Moderne building has been properly advertised for relocation. The Applicant shall advertise that the building is available for relocation in a local newspaper of general circulation for a minimum of four consecutive weeks.
3) A portion of the relocation fees, not to exceed the cost of demolition, shall be provided by the Applicant. The Applicant shall consider offers from interested parties, who can demonstrate a feasible plan for relocation, including a proposed site location, plans for relocation, and plans for rehabilitation of the property once moved. The applicant shall inform the Department for Community Sustainability and the Board of any such offers for relocation at the end of the advertisement period. If an interested party is selected to relocate the two-story Art Moderne building, the interested party shall be required to complete the relocation within four months of the close of the advertising period.

Vote: Ayes all, unanimous demolition can be concurrent.

5. HRPB Project # 15-00100231 Certificate of Appropriateness (COA) for roof replacement to the subject property located at 520 North Palmway PCN#38-43-44-2115-164-0050. The subject building was constructed in 1939 and the property is a contributing resource within the Old Lucerne Local Historic District.
   Postponed to April HRPB meeting.

G. New Business

Re-ordered and heard first. This item was heard prior to Unfinished Business.

1. HRPB Project Number 16-00100034: Consideration of a Certificate of Appropriateness (COA) for exterior alterations for the single-family residence located at 22 South M Street; PCN# 38-43-44-21-15-025-0030. The subject property was constructed c.1925 and is a contributing resource within the Old Town Local Historic District.

Staff presentation: A.Sunny staff report; in support of 1,3,4,5,8,15,16,17,18 openings single hung aluminum 6/1 divided light windows, supports reconfiguration of rear porch area, exterior raised muntions, supports the repair of the front door, but not replacement to a French door. Does not support the 3 large windows, [(the paired windows are typical of frame vernacular) suggestion of 2 pairs of French doors].

Applicant presentation: Gissela Torrella and David Torrella want 3 windows and states the French door configuration would impede the garden view. The proposed windows are impact windows to help curb the noise since they are in a downtown area.

William indicates that the conversion from residential to commercial use could possibly bring this back to Board review, the change in use subjects the building to review of the Florida Building Code.

Board comments: T. Norris reiterates the value of the building, it is a contributing structure. Applicant provides a revised drawing for consideration.

Motion: E. Fitzhugh Sita windows 15, 16, 17, 18 to allow lower sill height, #5 window conversion to French doors and remaining conditions intact. D. Engel 2nd .

Vote: Ayes, all. unanimous.

Public Comment: none

6. Planning Issues:

D. Engel returns to dais at 9:05pm. Maxime Ducoste indicates LDR's will be heard by City Commission. A. Sunny indicates staff will be providing an insert for the May utility bills re: historic preservation. During the previous week, two (2) workshop sessions addressing statewide comprehensive planning and historic preservation was held. Director William Waters addresses the disconnect between the citizenry (what they want) vs. what staff can statutorily approve. There is a need to discover what is important to the town. The goal is to have a workshop during Preservation month.

7. Public Comments (3 minute limit): None

8. Departmental Reports :

Director William Waters indicates time approaching for EAR based amendments and Fiscal Year projections to be made.

This has been one of the busiest quarters. He has provided updates to Palm Beach County. The City of Lake Worth has the fastest approval process due to an aggressive code which gives much appreciated predictability and expediency to developers. The review model has caught the attention of many municipalities including Coral Gables. Mention of the Holiday Inn coming to the Boutwell Road area. The Director encourages everyone to visit this area to see the progress/forward strides the City is making with development.

9. Board Member Comments: E. Fitzhugh Sita meets with a Land Use professional group.

D. Engel: 25% tax credit is huge. High cost of insurance is detrimental to the state's progressive growth. Remind people to remove COA signs.

J. Just: questions Lake Worth approved money for the Boutwell Road area. Director clarifies that it is economic stimulus development money in the form of tax credit. J. Just also believes that metal roofs need to be considered as possibilities in the Historic districts due to insurance benefits.

T. Norris comments on the speed of the approval process, and perceived to have been dropped into the middle of a whirlwind.

J. Zoellner comments on the speed by which revisions were made to the presented plans.

H. Robinson: hopes the workshop is sooner rather than later.

Public comment: Loretta Sharpe memorial service to be held at Sacred Heart on Saturday.

10. Adjournment

Motion: to adjourn: 9:40 pm 2nd all,

Vote: ayes all, unanimous.

Attest:

_____
Herman Robinson, Chairman

Submitted By:

_____
Sherie Coale, Board Secretary

Minutes Approved:

_____
Date

CITY OF LAKE WORTH
1900 2nd Ave N · Lake Worth, Florida 33461 · Phone: 561-586-1687

Agenda
Regular Meeting
City of Lake Worth
Historic Resources Preservation Board
City Hall Commission Room
7 North Dixie Hwy; Lake Worth, FL

WEDNESDAY, APRIL 13, 2016 6:00 PM

1. Roll Call and Recording of Absences
2. Meeting was called to order at 6:04p.m..
   Present were: Herman Robinson, Tom Norris, Jimmy Zoellner, Madeleine Burnside, Judith Just Darrin Engel, Erin Fitzhugh Sita.
   Also present were Maxime Ducoste, Assistant Director Planning and Preservation; Aimee Sunny, Preservation Planning Coordinator; Carolyn Ansay, Board Attorney; Sherie Coale, Board Secretary.

3. **Pledge of Allegiance**

4. Additions/Deletions/Reordering and Approval of the Agenda
   March 9, 2016 minutes to be provided at next meeting,
   Agenda approved.
5. Approval of Minutes

   A. December 16, 2015 PZB/HRPB Joint Workshop
      Motion: E. Fitzhugh Sita 2nd D. Engel
      Vote: Ayes, all unanimous
   B. February 10, 2016 RM
      Motion: D. Engel 2nd T. Norris
      Vote: Ayes, all unanimous
   C. February 17, 2016 Special Meeting
      E Fitzhugh Sita would like to see the setback of the new building and removal of the commercial off the parking garage, 1000 square foot retail discussion expanded.
      John Szerdi and Don Skowron spelled correctly.
      To be presented next meeting along with March 9, 2016 meeting minutes.
      Motion: None
      Vote:
   D. March 9, 2016 RM

6. Cases

   A. Swearing in of Staff and Applicants

Board Secretary swore in all persons speaking tonight.

B. Proof of Publication
   1 advertised item

C. Withdrawals/Postponements

D. Consent
   None

E. Public Hearings

   1. Board Disclosure
      H. Robinson spoke to applicants from North K Street just prior to the meeting and it will not affect his judgement on the case.

      a. Form 8B Recusal

F. Unfinished Business

   1. HRPB Project Number 15-00100231: Consideration of a Certificate of Appropriateness (COA) for roof replacement to the subject property located at 520 North Palmway, PCN# 38-43-44-21-15-164-0050. The subject building was constructed in 1939 and the property is a contributing resource within the Old Lucerne Local Historic District.

      Staff: Continuance granted at March meeting. Additional information and 3 quotes from applicant was requested by Board at the February 10 meeting; 3 have since been provided.
      Staff has located 3 products of metal shingles that could be utilized for the said roof replacement, provided with staff report. Applicant has requested to replace roof with a standing seam roof. Staff has reviewed the plan according to the Standards from National Park Service and Secretary of the Interior Standards and City Ordinances. Based upon the review, staff does not support the change. The response from the State Senior Preservation Architect indicates the standing seam would not be an acceptable replacement for a historic structure. Metal shingle would most closely replicate the original roof. Recommendation for either metal shingles or a compatible product grey asphalt shingle roof, with grey being the closest in color and texture if metal shingles are not chosen.
      Board: J. Just questioned why we have defined the color of material. A. Sunny indicates because it is an intrinsic quality/standard being applied. H. Robinson indicates this is type of application that makes this job difficult, based on value and neighborhood of similar standing seam roofs. Finds it difficult to disagree with staff and also not to maintain historic standards. Likes the distinctive, attractive quality of the Key West shingle. Board must move forward with a decision
      J. Just: asks about cost comparison.
      Applicant: Dana McLaughlin, Shane O'Mara- Metal tiles suggested readily available does not mean locally available. Cost escalates from 9K to 15 K roof. Does not understand how Board can ask the applicant to spend that money. The neighboring roof could have a 5 V crimp and she is not allowed a standing seam roof.

Board: E. Fitzhugh Sita asks how applicant feels about a grey shingle roof. Applicant indicates it is not her first preference. If the metal shingles are the recommendation, she would opt for the second choice of grey shingle. J. Zoellner and T. Norris have misgivings over this decision re: materials and both concur that the grey shingle would be their suggestion as a second choice over the metal shingle. J. Zoellner does not visualize a standing seam roof on the house. D. Engel compliments staff member, Aimee Sunny, with her analysis of the structure and proposal and indicates, in his estimation, the analysis is correct. Acknowledges there are other homes in the area with new roofs. Believes it should have a metal roof, but we are upholding our ordinance by not permitting the standing seam roof, whether he personally likes it or not.
Public: Marian Cone, preservationist, says Board member D. Engel is also correct in assessment. Do not replicate mistakes by mimicking the other standing seams in the neighborhood.
Board: E. Fitzhugh Sita questions whether a frame vernacular from the 30's would have had a standing seam? Most likely not is the general consensus. D. Engel states there is no question as to what the original roof material is/was. At the time he worked for the city, there was an acceptable notion of "like material for like material" which may explain the reason there are many metal roofs in the neighborhood. H. Robinson brings up the question of utilizing metal shingles on the visible side (as a cost factor) and asphalt shingles on the balance. Manufacturer warranties most likely would be invalidated. E. Fitzhugh Sita has been before the Board personally for similar issues for her home in the City of Lake Worth and expresses her empathy for the homeowner.

Staff discusses option of an economic hardship application, provide a revised application for the metal shingles.

Motion: E. Fitzhugh Sita motions to deny request for standing seam. 2nd by J. Zoellner.
Vote: 3 nays H. Robinson J Just M. Burnside
4 yeas, motion to deny carries.

G. New Business 39:39

1. HRPB Project Number 16-00100071: Consideration of a Certificate of Appropriateness (COA) for window and door replacement for the main single-family structure located at 915 North K Street; PCN# 38-43-44-21-15-280-0130. The subject property was constructed in 1941 and is located within the Northeast Lucerne Local Historic District.

Staff: Provides overview of staff findings. Public frontage on North K to the east. Has undergone several changes over time. Retains a good degree of original material, setting and design. Impact aluminum casement and horizontal rollers windows and french doors are being requested. Condition of the window elements. Weather stripping should be added Caulk and putty should be applied, ropes and weights should be repaired. Paint failure is not necessarily an indication of wood rot. Double hung to aluminum casement windows, pair of double hung changed to horizontal roller are proposed. Applicant offered to put a muntin on the horizontal roller. Also there is a single double hung window to single casement window. French door.
Board: D. Engel inquires as to whether the structure contributing. Staff indicates although it cannot be found in the survey. No information found.
Applicant: Jeff Berkoff (Contractor) **Owners:** Phillip Staley and Robert Martin

Mr. Berkoff states he spoke to Katie and was told it was not contributing. Discussion regarding the egress/ingress requirement of 5.7 sq ft, which is currently not there. The horizontal roller, facing the fence in bedroom, could become a casement window. States the price point for new wood windows, such as Pella or Marvin to name a few, becomes prohibitive. States the windows rattle, the glass is thin, the bedroom windows are kept closed, and there is no putty.

Board: D. Engel indicates there is no apparent rot of wood, he's very experienced with wood windows.

Applicant: The owners want it to look historic. Indicates that interior vs exterior temperature is high/low, the insurance and utility bills are high. This is the reason for impact windows, trying to improve the house. Owner states his home is his castle and wants it to be his castle.

Public: Marian Cone, preservationist, questions why contractor didn't come to the Board prior to purchasing windows and agrees with D. Engel's assessment of situation.

Board attorney: Advises Board to weigh the source of the given expertise with regard to the decision.

Board: T. Norris asks about the front window, is it proposed to have 2 one over one single hung installed? E. Fitzhugh Sita will not support a change of configuration.

Contractor: States it is 2016 not 1940. Do not deny the egress/ingress, anything less than 100 % impact is not acceptable. Said they are not repairable.

Board: M. Burnside begins to ask about contributing vs. non-contributing. **Staff clarifies.**

Contractor: insists that it is a non-contributing structure.

Staff reminds Board that although a structure may not be a contributing structure they are all treated the same in the eyes of the ordinances. Confirmed with the Building official provided that the egress/ingress opening size does not decrease over the currently existing opening the type will not adversely affect the building review.

1.11.53

1) **Motion:** D. Engel motions to approve with conditions as recommended by staff. With Condition #1 modified to read: Replacement windows shall be wood, wood-clad, or aluminum double-hung windows, to match the original window opening sizes and configuration, and have a 1/1 pattern that replicates the (10) original wood double-hung windows and (2) non-original aluminum windows. The new windows shall be installed at the same depth in the jamb as the existing windows. All decorative wood trim shall remain if possible and if replacement is necessary the trim shall be replicated exactly in size, shape, profile and configuration.
E. Fitzhugh Sita 2nd for discussion.
Vote: Ayes all, unanimous

2. Review of City Initiated Demolition at 914 North M Street

Due to deterioration issued unsafe structure. Board may comment- Q? Why it hasn't been boarded up.
William Waters, Director of Community Sustainability, indicates it is not prudent given the coffers of the City to board and secure and then come back and tear it down. PBSO has the ability to arrest for trespass.
D. Engel- would rather see it boarded, children like to play in empty houses. J. Zoellner says house has been like this a long time. Director indicates unsafe structures do not require notification period. 3 verbal bids, asbestos and lead survey and remediation if necessary, takes @ one month. Unsafe structure is the key. Program allows 250K for

Lot clearings Board & Secure and demolitions. ½ spent on this fiscal year. Boarding and lot clearing take most of the $$. Money will be returned to city coffers beginning FY 2017. Appraisals Vacant lot in Lake Worth may has a lesser value than the same lot with an unsafe structure. H. Robinson states this property, with the decrepit property has increased in value.
Board: D. Engel and H. Robinson want house boarded and secured, tear down the garage. Believes the empty lot is an opportunity for even worse things.
E. Fitzhugh Sita disagrees. J. Zoellner and J. Just would not like to live next to it and would want it torn down.

3. HRPB Project # 16-02900002 for Consideration of a request by Stateside Partners LLC, for a Text Amendment to Section 23.3-14, Downtown (DT) and Section 23.3-6, the Permitted Use Table and Section 23.4-13 of the City's Land Development Regulations (LDRs), to allow Drive Through Facilities as a Conditional Use within the Downtown Zoning District specifically west of Dixie Highway.

1:31:45

Staff: Curt Thompson provides a synopsis of the project
Board comments: T. Norris asks if all existing drive-thrus are non-conforming, the answer is yes.
E. Fitzhugh Sita would like to know what type of business would like to go at this location. Additional language added to requirements for drive thru. Excludes all drive thru restaurants restrict to west side of Dixie due to performance of properties. The east of Dixie more oriented to pedestrian traffic vs. west side of Dixie which is more oriented to vehicular traffic. Staff recommends approval of this revision to the Land Development Regulations. Conditional use applications will be required.

M. Ducoste clarifies. The DT district is the only district not allowing drive thru as a conditional use. Striped area will be the areas in totality that are allowed drive thru conditional use not restaurant. Does not think Lake or Lucerne should be allowed.

Applicant: Jeff Iravani with Stateside Partners- Multi use commercial use development. Believes that pedestrian and drive thru are not incompatible.

E. Fitzhugh Sita would like to amend the text to disallow on Lake and Lucerne west of Dixie Highway. T. Norris agrees and believes this is a pedestrian area, near the roundabout.

1:46:36

Dixie Hwy seems to have a considerable amount of pedestrian traffic.

CRA: Joan Oliva- The CRA has acquired much of the land behind and the end result will be a very good pleasing product with underground utilities.

E. Fitzhugh Sita is not concerned about other properties that will now be open to drive thru.
Recommendation to approve to cross hatched pink area and eliminate the possibility of Lake and Lucerne frontage being allowed to have drive thrus.

1:54:27

MU-East Federal Hwy allows drive thru for a small area, the balance does not.

Major thoroughfare guidelines are applied and discussion about window size minimum for eligible structures come into question. 2:01:04
E. Fitzhugh Sita would like to clarify the window size opening and the location of the said drive thru window. E. Fitzhugh Sita recommends striking the verbage of residential gate stacking distance.

2:09:20

Motion: Approve the main motion and disallow Lake and Lucerne from being included in the change. D. Engel 2nd with the addition of 2 E 8 must be part of a multi-tenant or financial institution.

Motion dies. The seconded amendment is not accepted to the main motion.

Repeat motion. Approve the main motion with the pitched roof stricken, disallowing Lake and Lucerne from bring included and deleting gated entrance to residential development.

Vote: Ayes all unanimous

7. Planning Issues

   A. Discussion of Historic Preservation Case Studies
   Director of Community Sustainability: William Waters- Lake Worth took a very strong stance toward Historic Preservation without the framework. West Palm Beach, on the contrary, took a more gradual path with one property precipitating the inception (a B&B) of their program.
   Lake Worth does not have specifically established criteria for the determination. The 3rd wed of may will be a workshop to discuss the adoption of design guidelines specific to Lake Worth. Lack of guidelines and misinterpretation or guidelines that do not address the specific issues. Director Waters discusses roof materials, and states that concrete tile roofs are classic Florida roofing material. We must be consistent otherwise we are on shaky ground.

   2:23:43

   City Commission assesses that we are stymying investment in the City however the historic districts are investing at a greater rate than popular opinion allows. For a period of 7 years there was no any leadership in historic preservation.

   E. Fitzhugh Sita offers that non-contributing should not be treated the same as contributing and would have differing criteria. D. Engel concurs, T. Norris believes that overall contributing is specific to a particular district. Board comments on whether public comment should be first then Board or vice versa.

8. Public Comments (3 minute limit)

9. Departmental Reports
   Staff: A. Sunny & K. Jacob: Present a slide show and will send it to Board members. Presentation of a sample metal roof. 2:51:54.
   July 1 money to be awarded to begin survey, the award would be @ 35 K with preliminary by end of year. A Fellowship for A. Sunny and 2 matching grants applied for. 50K & 30 K each.
10. Board Member Comments:

D. Engel: 3oo N Palmway completed; new house on 200 block of Princeton looks good. 209 & 204 Fordham concrete roof beautiful white. New Book- Living in the Past- choosing a historic house.

J.Just believes the workshop is a great idea and good to involve neighborhood.

T. Norris - Marvin windows sash replacement .

J. Zoellner- what is going on with building, city owned and being sold. Rehabbed and back up by a date certain. Foreclosure property.

M. Sideburn: comes from a museum background art and history, returning to Florida via Kentucky and Key West. Santa Cruz PHD.

C. Ansay advises that the Gulfstream appeal to the rezoning is underway.

H. Robinson: Greasetraps are required by Health Dept.

H. Robinson asks about the projection screen being moved for the internet public. Wm advises he will inquire. Asks about churches in home.

Board attorney cautions about discussion of any application before its received.

11. **Adjournment at:** 9:26 pm
Motion: T. Norris M. Sideburn 2nd
Vote: Ayes all

Attest: _____
Herman Robinson, Chairman

Submitted By: _____
Sherie Coale, Board Secretary

Minutes Approved: _____
Date

THE

LAKE WORTH HERALD

Published Once a Week

Lake Worth, Palm Beach County, Florida

STATE OF FLORIDA
COUNTY OF PALM BEACH:

BEFORE the undersigned authority personally appeared MARK J EASTON, who on oath says that he is PRESIDENT of *The Lake Worth Herald*, a weekly newspaper published at Lake Worth in Palm Beach County, Florida; that the attached copy of advertisement, being a Legal Notice in the matter of

Notice by the City of Lake Worth, Florida, Historic Resources Preservation Board, HRPB 16-00100082, public hearing to be held at or after 6:00 p.m. on May 11, 2016, in the City Hall Commission Chambers, 7 North Dixie Highway, Lake Worth, Florida,

was published in said newspaper in the issue of

April 28, 2016

Affiant further says that the said *The Lake Worth Herald* is a newspaper published at Lake Worth, in said Palm Beach County, Florida, and that the said newspaper has heretofore been continuously published in said Palm Beach County, Florida, each week and has been entered as second class mail matter at the post office in Lake Worth, in said Palm Beach County, Florida, for a period of one year next preceding the first publication of the attached copy of advertisement; and affiant further says that he has neither paid nor promised any person, firm or corporation any discount, rebate, commission or refund for the purpose of securing this advertisement for publication in the said newspaper.

MARK J EASTON

SWORN TO AND SUBSCRIBED before me this 28th day of April, A.D. 2016 by Mark J Easton, who is known to me.

Notary Public, State of Florida at Large

Legal Notice No. 30179

PLEASE TAKE NOTICE that the City of Lake Worth, Florida, Historic Resources Preservation Board, will hold a public hearing in the City Hall Commission Room, 7 N Dixie Hwy, in said City at or after 6:00 P.M. on May 11, 2016, to consider the following:

HRPB 16-00100082: Consideration of a request by Anne Fairfax Ellett, Applicant, to allow exterior alterations, a variance for building lot coverage, and new construction of a +/- 1417 square foot addition to the existing single family structure located at 226 South L Street, pursuant to Section 23.2-7 and Section 23.3-8 of the Land Development Regulations. The subject property is in the Multi-Family Residential (MF-20) Zoning District, and is a contributing structure in the Southeast Lucerne Local Historic District. PCN#: 38-43-44-21-15-091-0040.

The Public Hearing will be conducted at the above stated time or as soon thereafter as possible.

Written responses can be sent to the Lake Worth, Historic Resources Preservation Board at 1900 2nd Avenue N, Lake Worth, FL 33461 and must arrive before the hearing date to be included in the formal record. You also have the opportunity to attend the meeting to provide oral testimony.

For additional information on the above issues, please visit the City of Lake Worth Division of Planning, Zoning and Historic Preservation located at 1900 Second Ave. North, Lake Worth, Florida 33461 or contact City Staff at 561-586-1687.

If a person decides to appeal any decision made by the Board, Agency, or Commission with respect to any matter considered at such meeting or hearing, he or she will need a record of the proceedings, and that, for such purpose, he or she may need to ensure that a verbatim record of the proceedings is made, which record includes the testimony and evidence upon which the appeal is to be based. (FS 286.0105)

In accordance with the provisions of the American with Disabilities Act (ADA) this document may be requested in an alternative format. Persons in need of special accommodation to participate in this proceeding are entitled to the provision of certain assistance. Please call 561-586-1687 no later than five (5) days before the hearing if this assistance is required.

Publish: The Lake Worth Herald
April 28, 2016

THE
LAKE WORTH HERALD

Published Once a Week
Lake Worth, Palm Beach County, Florida

STATE OF FLORIDA
COUNTY OF PALM BEACH:

BEFORE the undersigned authority personally appeared MARK J EASTON, who on oath says that he is PRESIDENT of *The Lake Worth Herald*, a weekly newspaper published at Lake Worth in Palm Beach County, Florida; that the attached copy of advertisement, being a Legal Notice in the matter of

Notice by the City of Lake Worth, Florida, Historic Resources Preservation Board, HRPB 15-00100022, public hearing to be held at or after 6:00 p.m. on May 11, 2016, in the City Hall Commission Chambers, 7 North Dixie Highway, Lake Worth, Florida,

was published in said newspaper in the issue of

April 28, 2016

Affiant further says that the said *The Lake Worth Herald* is a newspaper published at Lake Worth, in said Palm Beach County, Florida, and that the said newspaper has heretofore been continuously published in said Palm Beach County, Florida, each week and has been entered as second class mail matter at the post office in Lake Worth, in said Palm Beach County, Florida, for a period of one year next preceding the first publication of the attached copy of advertisement; and affiant further says that he has neither paid nor promised any person, firm or corporation any discount, rebate, commission or refund for the purpose of securing this advertisement for publication in the said newspaper.

MARK J EASTON

SWORN TO AND SUBSCRIBED before me this 28th day of April, A.D. 2016, by Mark J Easton, who is known to me.

Notary Public, State of Florida at Large

DEBRA J SNODGRASS
NOTARY PUBLIC
STATE OF FLORIDA
Comm# FF045522
Expires 9/18/2017

Legal Notice No. 30180

PLEASE TAKE NOTICE that the City of Lake Worth, Florida, Historic Resources Preservation Board, will hold a public hearing in the City Hall Commission Room, 7 N Dixie Hwy, in said City at or afte 6:00PM. on May 11, 2016, to consider the following:

HRPB 15-00100022: Consideration of a request by Arthur Marino, Applicant, to allow new construction of a +/- 4363 square foot addition to the existing single-family structure located at 812 South Lakeside Drive, pursuant to Section 23.2.7 and Section 23.3-7 of the Land Development Regulations. The subject property is in the Single-Family Residential (SFR) Zoning District, and is a contributing resource in the South Palm Park Local Historic District, PCN#: 38-43-44-27-01-025-0050.

The Public Hearing will be conducted at the above stated time or as soon thereafter as possible.

Written responses can be sent to the Lake Worth Historic Resources Preservation Board at 1900 2nd Avenue N, Lake Worth, FL 33461 and must arrive before the hearing date to be included in the formal record. You also have the opportunity to attend the meeting to provide oral testimony.

For additional information on the above issues, please visit the City of Lake Worth Division of Planning, Zoning and Historic Preservation located at 1900 Second Ave. North, Lake Worth, Florida 33461 or contact City Staff at 561-586-1687.

If a person decides to appeal any decision made by the Board, Agency, or Commission with respect to any matter considered at such meeting or hearing, he or she will need a record of the proceedings, and that, for such purpose, he or she may need to ensure that a verbatim record of the proceedings is made, which record includes the testimony and evidence upon which the appeal is to be based. (FS 286.0105)

In accordance with the provisions of the American with Disabilities Act (ADA) this document may be requested in an alternative format. Persons in need of special accommodation to participate in this proceeding are entitled to the provision of certain assistance. Please call 561-586-1687 no later than five (5) days before the hearing if this assistance is required.

Publish: The Lake Worth Herald
April 28, 2016

Lake Worth, Florida. The Art of Florida Living.sm

City Of Lake Worth
Department for Community Sustainability
Planning, Zoning and Historic Preservation Division
1900 Second Avenue North · Lake Worth · Florida 33461· Phone: 561-586-1687

MEMORANDUM DATE: May 4, 2016

AGENDA DATE: May 11, 2016

TO: Chair and Members of the Historic Resources Preservation Board

RE: **226 South L Street**

FROM: William Waters, Director for Community Sustainabilty
Maxime Ducoste, Assistant Director for Community Sustainability

TITLE: HRPB Project Number 16-00100082 and 16-01500006: Consideration of a Certificate of Appropriateness (COA) for new construction of an addition, a historic waiver for stairs in the front setback, a variance to allow a building lot coverage above the Code allowance, and pre-construction approval for a historic preservation ad valorem tax exemption, for the existing single-family structure located at **226 South L Street**; PCN# 38-43-44-21-15-091-0040. The subject property was constructed c.1925 and is a contributing resource within the Southeast Lucerne Local Historic District.

OWNER/APPLICANT: Anne Fairfax Ellett
455 Worth Ave #303
Palm Beach, FL 33480

BACKGROUND:

The single-family structure at 226 South L Street was constructed c.1925 in the Frame Vernacular style. The building was constructed on a 25-foot wide lot of record and has a public frontage facing South L Street to the west. Vernacular building traditions resulted from the builder's experience, available resources, and responses to the local environment. The subject property is a simple expression of the style with few decorative architectural elements. Original features that define the style of the building include the rectangular floor plan, gable roof, open overhanging eaves with rafter tails, and shiplap siding. Features that have been altered include the window types and size, roof type and height of the pier foundation. Overall, the building retains a moderate degree of historic integrity of location, setting, materials, and design.

In 2006 the property owner at the time applied for a building permit for a substantial remodel/rehabilitation of the building. The scope of work included removing and rebuilding a flat roof addition on the rear of the building, new windows, doors, roof and an all new interior floor plan. The plans went through several revisions with comments from the historic plans reviewer, though no record of an official COA was found in the property records. The work does not to appear to have progressed beyond the removal of the rear addition before the permit expired in 2009.

In July 2012, an application was submitted for a full demolition permit for the building with the City of Lake Worth Building Division. However, no pre-application clearance was applied for with the Division of Planning, Zoning and Historic Preservation and no review activity occurred on the property. A rehabilitation proposal was heard and approved by the HRPB in January 2013, however no actvitiy occurred and the COA has since expired.

REQUEST:

The Applicant is requesting exterior alterations and new construction of an addition as follows:

1) Remove all existing windows and install new wood double-hung 6/6 windows in all openings; several opening sizes will be altered to accommodate the proposed windows.
2) Replace the non-original jalousie front door with a new 6-panel impact door.
3) Repair the projecting gabled front porch overhang if possible, or reconstruct if the level of deterioration is too severe.
4) Remove the existing asphalt shingles and install a new "Enviroshake" composite wood-look shake roof.
5) Remove the entire rear façade and exposed foundation in preparation for the new addition.
6) Remove approximately 3' from the rear of the structure.
7) Remove the overhanging eaves on the front and rear of the structure.
8) Repair wood siding if possible, or replace in kind if the level of deterioration is too severe.
9) Remove an existing wooden shed in the rear yard.
10) Construct a new two-story +/- 1238 square foot addition.
11) Construct a new one-story +/- 252 square foot freestanding one-car garage.

The Applicant is requesting a Variance as follows:

1) A variance to allow a building lot coverage over the Code allowance; the Applicant is requesting a 44.3% building lot coverage (1,495 square feet) and the Code allowance is 40% (1,350 square feet).

The Applicant is requesting a Historic Waiver as follows:

2) A historic waiver from Code Section 23.3-8(3)A to allow construction of the front stoop and stairs in the required front setback.

COMPREHENSIVE PLAN CONSISTENCY:

It is the opinion of Staff that portions of the project, as proposed, are not consistent with the Comprehensive Plan goals and objectives concerning historic preservation and housing due to the fact that the Applicant is proposing a change that will have an adverse effect on the historic integrity of the property. Specifically, the request is in conflict with these objectives:

Goal 1.4 Encourage preservation and rehabilitation of historic and natural resources and where appropriate restrict development that would damage or destroy these resources. (Objective 1.4.2)

Objective 3.2.5: To encourage the identification of historically significant housing, and to promote its preservation and rehabilitation as referenced by the Surveys of Historic Properties conducted for the City of Lake Worth.

Policy 3.2.5.1: Properties of special value for historic, architectural, cultural or aesthetic reasons will be restored and preserved through the enforcement of the City's Historic Preservation Ordinance to the extent feasible.

ANALYSIS:

Zoning

The subject property is zoned Multi-Family Residential-30 (MF-30), however the Code points to the Single-Family Two-Family 14 (SF-TF 14) code for properties that do not meet the minimum requirements of the MF-30 zoning. This proposal is subject to the development standards for the SF-TF 14 in the City of Lake Worth Zoning Code. The property is not required to meet the current minimum lot size standards for the district, as the lot is an original platted lot of record.

The following table includes some of the basic specifications for the proposed construction:

Dimension	Required by Code	Proposed
Lot size	5,000 sq. ft for single-family	3,375 sq. ft existing (25' x 135')
Front setback	20'-0"	12'-3" to bldg front (no change), 8'-9" to front of porch steps
Side setback	10% of lot width, minimum 3'-0"	North = 3'-0" to proposed addition; South = 3'-0" to proposed addition
Rear setback	5'0"	36'-9" to bldg rear, 5'-0" to garage rear
Floor Area Ratio	0.55 = 1,856.25 sq. ft	0.54 = 1,820 sq. ft
Building Lot Coverage	40% = 1,350 sq. ft	44.3% = 1,495 sq. ft
Impermeable surface	60% max. = 2,025 sq. ft	55% = 1,848 sq. ft
Parking Spaces	2 spaces	2 spaces, 1 in garage, 1 on adjacent street

The Applicant does not meet the Zoning Code requirements for the front setback and the building lot coverage. The Applicant has requested, and Staff is in support of, a Historic Waiver for the front building setback to allow construction of the front porch steps and stoop in the setback. Historically, the stairs were located within the setback, and although the stairs have been presently removed, they are necessary to access the structure.

The Applicant has requested, and Staff is not in support of, a Variance to allow a building lot coverage above the code allowance, as demonstrated by the Staff response to the Variance criteria outlined below.

VARIANCE REQUEST

Variance Analysis:

According to Section 23.2-26 the power to grant any such variance shall be limited by and be contingent upon documentation that **all required findings are** made by the appropriate board. The following addresses each of the required findings with respect to the applicant's requested variances.

HRPB Project# 16-01500006: Request from Section 23.3-8 of the City's Land Development Regulations to allow a maximum lot coverage of 44% (1495 sq. ft.) instead of the required maximum lot coverage for all buildings of 40 % (1350 sq. ft.) resulting in a variance of 4% (145 sq. ft.) for a single family residence in the SF-TF14 zoning district.

1. Special circumstances or conditions exist which are peculiar to the land or building for which the variance is sought and do not apply generally to nearby lands and buildings, and that this is not the result of action of the applicant;

   Staff Response: The applicant does not complies with this standard.
   There are no circumstances or conditions unique to this site that require the applicant to request this variance. The applicant could reduce the size of proposed improvements/addition to meet the requirements of the LDRs, specifically the maximum lot coverage requirement. An undue hardship exists when the condition is unique to the property of the applicant. There are a number of properties in this area that are 25' by 135' in size. Thus the plight of the applicant is not due to circumstances that are peculiar to the land. Therefore, this variance request should not be granted.

2. The strict application of the provision of these LDRs would deprive the applicant of any reasonable use of the land or building for which the variance is sought;

   Staff Response: The applicant does not comply with this standard**.**
   The concept of "reasonable use of the land or building" has been defined in very specific terms by Planning and Zoning experts. To prove that the property owner or the applicant, in this case, will receive no reasonable return without the variance, they must show that they will be deprived of all beneficial use of their land. What this standard means is that they must show that the land is not suitable for any use permitted by the zoning ordinance. The applicants have not shown how the zoning regulations deprive them of a reasonable use of their land. Conversely, the subject property has been improved and developed with a single-family home, which is allowed under the Land Development Regulations. The applicant can within the regulations build the proposed improvements/addition and comply with the LDRs. Therefore, this variance request should not be granted.

3. That the variance proposed is the minimum variance which makes possible the reasonable use of the land or building;

   Staff Response: The applicant does not comply with this standard**.**
   Denial of the variance would not deprive the applicant of the ability to plan, design and build this project while complying with the City's LDRs. The concept of "reasonable use of the land or building" has been defined in very specific terms by Planning and Zoning experts. To prove that the landowners will receive no reasonable return without the variance, they must show that they will be deprived of all beneficial use of their land. What this standard means is that they must show that the land is not suitable for any use permitted by the zoning ordinance. The applicant has not shown how the zoning regulations deprive them of a reasonable use of their land. Conversely, the subject property is already developed with a single family residence which is the reasonable use of the land and the proposed improvements/addition can be reasonably design to meet the City's LDRs. Therefore this variance request should not be granted.

4. That the granting of the variance will be in accordance with the spirit and purpose of this chapter, and will not be unduly injurious to contiguous property or the surrounding neighborhood nor otherwise detrimental to the public welfare. In deciding appeals from decisions of the development review official or

in granting variances, the decision-making board is authorized and required to impose any reasonable conditions and safeguards it deems to be necessary or desirable, and violation of such conditions or safeguards when made a part of the terms under which a variance is granted, shall be deemed to be a violation of these LDRs.

Staff Response: The applicant does not comply with this standard**.**
Although this request would not be unduly injurious to the surrounding properties, approving this variance request would be granting a special privilege that would not be available to other properties. The applicant has not demonstrated nor convinced the staff that not granting the variance would cause an "undue hardship." Undue hardship, in this context, means a problem created by some feature of the land rather than a personal issue or design preference of the applicant, such as not having as much living space as they would like. Conversely, the applicant's request would represent granting of a special privilege specific to this property. Therefore this variance request should not be granted.

ANALYSIS:

Historic Preservation – Exterior Alterations
Staff has reviewed the documentation and materials provided in this application and outlined the applicable guidelines and standards found in the City's Historic Preservation Ordinance, detailed in Attachment 1 – Decision Criteria.

The National Park Service and Secretary of the Interior's Standards have very specific criteria regarding replacement of historic materials. Specifically Standards 2, 5, and 6 apply in this situation:

Standard 2 - The historic character of a property will be retained and preserved. The removal of distinctive materials or alteration of features, spaces, and spatial relationships that characterize a property will be avoided.

Standard 5 - Distinctive materials, features, finishes, and construction techniques or examples of craftsmanship that characterize a property will be preserved.

Standard 6 - Deteriorated historic features will be repaired rather than replaced. Where the severity of deterioration requires replacement of a distinctive feature, the new feature will match the old in design, color, texture, and, where possible, materials. Replacement of missing features will be substantiated by documentary and physical evidence.

It is the opinion of Staff that the project as proposed is not compatible with the review criteria set forth in the City's Land Development Regulations, Historic Preservation Ordinance, Section 23.5-4.

The Applicant is proposing to remove a significant portion of the overhanging eaves on the front and rear of the structure, as well as demolish 3 feet from the rear of the existing structure. This request is not in compliance with the Standards outlined above and the City's Code. The overhanging eaves and the original size and length of the structure are important, character-defining features and they should be preserved.

The Applicant is also proposing to replace all of the non-original windows with double-hung 6/6 wood windows. The Applicant has indicated that interior framing suggests that the current configuration of most windows is not original to the structure, and is proposing to balance the window sizes and design. Staff cannot confirm the original size and location of the windows, however the proposed size, shape, location, and configuration of the 6/6 wood windows is consistent and compatible with the time period and the frame vernacular construction. The proposed 6-panel wood doors are also consistent and compatible with the architectural style of the structure.

Historic Preservation – Addition

The National Park Service and Secretary of the Interior's Standards have very specific criteria regarding additions to historic structures. Specifically Standards 9 and 10 apply in this situation:

Standard 9 - New additions, exterior alterations, or related new construction shall not destroy historic materials that characterize the property. The new work shall be differentiated from the old and shall be compatible with the massing, size, scale, and architectural features to protect the historic integrity of the property and its environment.

Standard 10 - New additions and adjacent or related new construction shall be undertaken in such a manner that if removed in the future, the essential form and integrity of the historic property and its environment would be unimpaired.

The proposed addition complies with these Standards and the City's Code concerning the compatibility of additions to historic structures. The addition is compatible in height, scale, massing, and architectural detailing with the existing structure. The original proposal did include wood siding on the rear two-story portion of the addition, to complement the wood siding on the front structure, and Staff has recommended a condition of approval relating to this feature.

Staff does have some concerns over the height of the proposed addition in relation to the Code allowances, and is awaiting further survey and site section information from the Applicant. Height would be measured from 12" above the crown of the road, which is very close to the existing grade nearest the street. The site has a significant slope towards the rear of the property, and the Applicant is proposing to use this slope in order to achieve the height allowances in the Code. Based on future survey information, the height of the structure may need to be amended in order to comply with Zoning or Building Code requirements.

Historic Preservation Ad Valorem Tax Exemption

As part of the Tax Exemption requirements, the HRPB must approve the scope of work prior to the commencement of construction and all work must comply with the Secretary of the Interior's Standards for Rehabilitation.

Pursuant to Section 23.5-5 of the historic preservation ordinance, in the review of preconstruction applications for the historic ad valorem tax exemption program, the HRPB is required to make findings pursuant to three criteria and determine the following:

1) Whether the property for which the proposed exemption is requested satisfies section 196.1997(11)(a), Florida Statutes.

   Staff Response: The subject property is a contributing historic resource in the Southeast Lucerne Local Historic District, designated by local ordinance in 2002.

2) Whether the proposed improvements are consistent with the Secretary of the Interior's Standards for Rehabilitation and Guidelines for Rehabilitating Historic Buildings (revised 1990), U.S. Department of the Interior, National Park Service, which are hereby incorporated by reference in this section, and the criteria specified in Chapter 1A-38, F.A.C.

   Staff Response: As outlined and discussed during the review of the Certificate of Appropriateness for the exterior alterations and an addition, the proposal is largely compatible with the historic character of the building and will not have an adverse effect on the historic integrity of the property. Staff has recommended conditions of approval to address the non-compatible elements of the proposal. With these conditions, it is the analysis of Staff that the alterations and addition meet the intent of the Secretary of the Interior's Standards and the Guidelines for Rehabilitating Historic Buildings.

3) For applications submitted under the provisions of section 196.1998, Florida Statutes, whether the improvements meeting the criteria Rule 1A-38.001(3) and (4), F.A.C.

   Staff Response: Not applicable. The building is not intended to be used for non-profit or governmental purposes.

Public Comment
At the time of publication of this report, Staff has not received any public comment regarding this project.

CONSEQUENT ACTION:
Approve the application; approve the application with conditions; continue the hearing to a date certain to request additional information; or deny the application.

With regards to the variance application, the decision of the Historic Resource Preservation Board will be final; however, the Applicant may appeal the Board's decision to the Circuit Court of Palm Beach County.

With regards to the Certificate of Appropriateness applications for exterior alterations, new construction of an addition, and a historic waiver, the decision of the Historic Resource Preservation Board will be final; however, the Applicant may appeal the Board's decision to the Lake Worth City Commission.

RECOMMENDATION:
Based on the findings outlined in the analysis, staff recommends that the Historic Resource Preservation Board deny the variance as submitted by the applicant, given that the request does not meet the variance criteria outlined in Code Section 23.2-26.

Staff recommends that the Board approve the application for exterior alterations and the Historic Waiver, with the following conditions:

1) The existing overhanging eaves shall not be removed or shortened.
2) The rear 3 feet of the structure shall not be demolished as proposed. The proposal shall be minimally re-designed to account for keeping the rear 3 feet, and shall be subject to staff review at permitting.
3) The projecting gabled porch overhang shall remain and be repaired. If repair is not feasible, the overhang shall be replicated in size, shape, configuration, profile, and location.
4) The new windows shall be wood double-hung 6/6 windows with true divided lights as proposed. No reflective glass shall be used. If impact protection is required, the Applicant shall utilize removable metal panels, removable fabric screens, or impact colonial shutters, subject to staff review at permitting.

5) The roof material shall be the Enviroshake simulated wood shingle, as proposed.
6) All wood siding shall be repaired if possible. If repair is not feasible, the siding shall be replaced with new wood siding to replicate the size, shape, profile, and configuration of the existing siding.
7) All shutters shall be equal to half the width of the window opening, in order to fully cover the window when closed.
8) The requested Historic Waiver shall be granted for the constructions of stairs in the front building setback, as indicated on the submittal drawings.

Staff recommends that the Board approve the application for new construction of an addition with the following conditions:

1) The new addition shall comply with all provisions of the City's Zoning Code, including setbacks, building lot coverage, FAR, and building height, and shall be subject to staff review at permitting and inspection during construction.
2) Due to the schematic quality of the drawings with regard to building height and setback, the Applicant may need to revise the height of the structure in order to comply with all applicable zoning and building codes. This minimal re-design shall be subject to Staff review prior to permitting and inspection during construction.
3) The overhanging eaves on the rear two-story portion of the addition shall have the same overhang depth as the eaves on the front, historic one-story structure.
4) The rear two-story portion of the addition shall have wood siding to match the size, shape, and configuration of the siding on the front, historic one-story structure.
5) The proposed addition shall not damage the existing building. The existing structure shall be properly protected during construction so as not to incur damage from the addition.

Staff recommends approval of pre-construction application for a historic preservation ad valorem tax exemption with the following Conditions of Approval:

1) All work shall be conducted per the submitted and approved COA for exterior alterations and an addition, including the recommend conditons of approval. Any revisions or changes to this approval shall be reported to Staff and may require additional Staff or HRPB approvals.
2) All work shall be conducted in accordance with the Secretary of the Interior's Standards.
3) The applicant shall be responsible for fully documenting the rehabilitation process so that the Board will have sufficient documentation to evaluate the completed work and make a recommendation on the tax exemption application to the City Commission.

<u>POTENTIAL MOTIONS</u>:

Variance:

I MOVE TO **DENY** HRPB 16-01500006: Consideration of a Variance from Section 23.3-8 of the City of Lake Worth Land Development Regulations, to allow a building lot coverage of 145 square feet above the Code allowance for the subject property located at **226 South L Street**, because the Applicant has not established by a preponderance of the competent substantial evidence that the application is not in compliance with the City of Lake Worth Land Development Regulations Section 23.2-26.

I MOVE TO **APPROVE** HRPB 16-01500006: Consideration of a Variance from Section 23.3-8 of the City of Lake Worth Land Development Regulations, to allow a building lot coverage of 145 square feet above the Code allowance for the subject property located at **226 South L Street**, based upon the preponderance of competent substantial evidence and the City of Lake Worth Land Development Regulations Section 23.2-26.

Exterior Alterations, Addition, and Historic Waiver:

I MOVE TO **APPROVE** HRPB 16-00100082: Consideration of a Certificate of Appropriateness (COA) for exterior alterations, new construction of an addition, and a Historic Waiver for the subject proeprty located at **226 South L Street,** with the conditions as recommended by Staff, based upon the preponderance of competent substantial evidence, and pursuant to the City of Lake Worth Land Development Regulations Section 23.5-4.

I MOVE TO **DENY** HRPB 16-00100082: Consideration of a Certificate of Appropriateness (COA) for exterior alterations, new construction of an addition, and a Historic Waiver for the subject proeprty located at **226 South L Street,** because the Applicant has not established by a preponderance of the competent substantial evidence that the application is not in compliance with the City of Lake Worth Land Development Regulations Section 23.5-4, the Secretary of the interiors Standards for the Rehabilitation of Historic Properties, and the City's Comprehensive Plan.

Pre-Construction Approval for an Ad Valorem Tax Exemption Application:

I MOVE TO **APPROVE/DENY** HRPB 16-00100082: Consideration of a Pre-Construction Approval for a Historic Preservation Ad Valorem Tax Exemption at the subject property located at **226 South L Street**, with the conditions as recommended by Staff, and subject to the Findings of Fact as outlined in this Staff report.

ATTACHMENTS:

1. Decision Criteria
2. Application Photographs and Tax Exemption Documents
3. Justification Statements – Variance and COA
4. Proposed Architectural Drawings
5. Proposed Window Information
6. Proposed Roof Information
7. LDR Section 23.5-5
8. Florida Statute 196.1997 and 196.1998
9. Florida Administrative Code Ch. 1A-38

LOCATION MAP

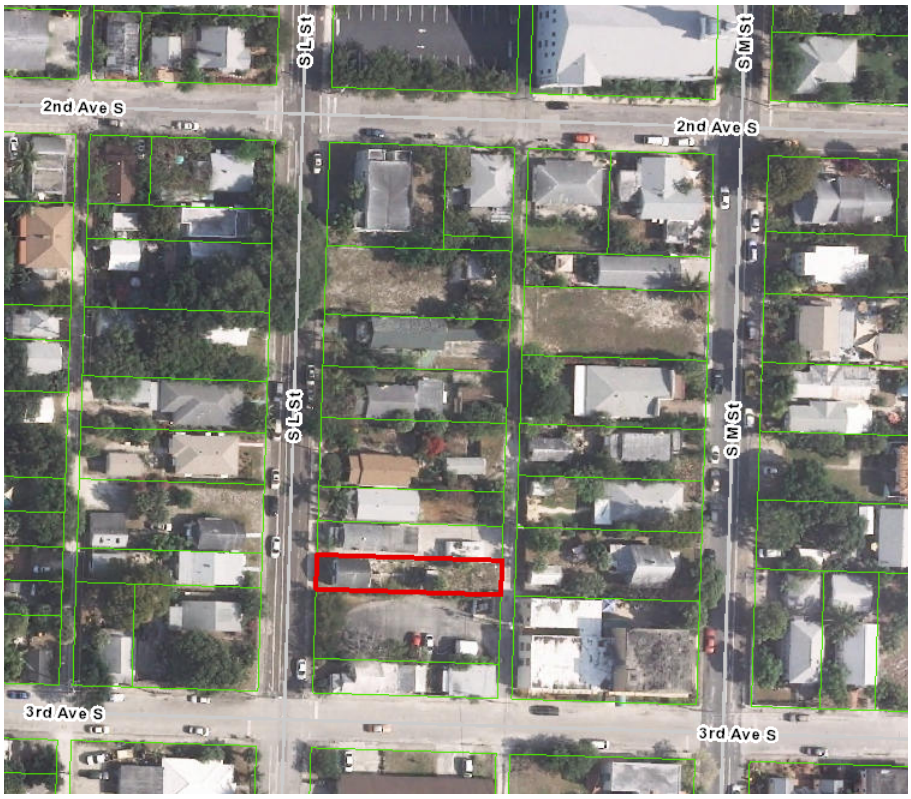

MEMORANDUM

DATE: May 10, 2016

TO: Chair and Members of the Historic Resources Preservation Board

FROM: William Waters, Director for Community Sustainability
Maxime Ducoste, Assistant Director for Community Sustainability

SUBJECT: **HRPB Project Number 16-00100082 and 16-01500006:** Consideration of a Certificate of Appropriateness (COA) for new construction of an addition, a historic waiver for stairs in the front setback, a variance to allow a building lot coverage above the Code allowance, and pre-construction approval for a historic preservation ad valorem tax exemption, for the existing single-family structure located at **226 South L Street**; PCN# 38-43-44-21-15-091-0040. The subject property was constructed c.1925 and is a contributing resource within the Southeast Lucerne Local Historic District.

HRPB Meeting Date: May 11, 2016

Per Section 23.5-4k(1) of the historic preservation ordinance, the Board shall use the following criteria in making a determination:

A. What is the effect of the proposed work on the landmark or the property upon which such work is to be done?
Response: It is the analysis of Staff that some of the alterations proposed on the existing structure would have an adverse effect on the historic appearance of the building. The proposal also exceeds the allowable building lot coverage for the property.

B. What is the relationship between such work and other structures on the landmark site or other property in the historic district?
Response: The proposed work will have no direct physical effect on any surrounding properties within the surrounding the Southeast Lucerne Local Historic District, however it will have an indirect visual effect on the district.

C. To what extent will the historic, architectural, or archaeological significance, architectural style, design, arrangement, texture, materials and color of the landmark or the property be affected?
Response: The Applicant is proposing work that changes the shape, dimension, and configuration of the original structure.

D. Would denial of a certificate of appropriateness deprive the property owner of reasonable beneficial use of his property?
Response: No, the denial of this COA as submitted does not prevent the Applicant from potentially proposing other alterations to the structure, nor would it make the building uninhabitable.

E. Are the applicant's plans technically feasible and capable of being carried out within a reasonable time?
Response: Yes.

F. Do the plans satisfy the applicable portions of the general criteria contained in the United States Secretary of the Interior's Standards for Rehabilitation then in effect or as they may be revised from time to time? The current version of the Secretary's Guidelines provides as follows:

(1) A property shall be used for its historic purpose or be placed in a new use that requires minimal change to the defining characteristics of the building and its site and environment.
Response: No change to the use of the property is proposed at this time.

(2) This historic character of the property shall be retained and preserved. The removal of historic materials or alteration of features and spaces that characterize a property shall be avoided.
Response: The Applicant is proposing to alter the shape, dimension, and configuration of the existing structure, which includes reducing the overhangs, a 3 foot portion of the structure, and the size of the existing structure.

(3) Each property shall be recognized as a physical record of its time, place and use. Changes that create a false sense of historical development, such as adding conjectural features or architectural elements from other buildings, shall not be undertaken.
Response: Not applicable to this project.

(4) Most properties change over time; those changes that have acquired historic significance in their own right shall be retained and preserved.
Response: Not applicable to this project.

(5) Distinctive features, finishes and construction techniques or examples of craftsmanship that characterize a historic property shall be preserved.
Response: The shape, dimension, and configuration of the existing structure are a distinctive feature of early frame vernacular architecture in Lake Worth.

(6) Deteriorated architectural features shall be repaired rather than replaced, wherever possible. In the event replacement is necessary, the new material should match the material being replaced in composition, design, color, texture, and other visual qualities.
Response: Staff supports the rehabilitation and addition to the existing structure. However, the decrease in size of the existing structure to accommodate the size of the proposed additions is not compatible with the review criteria set forth in the City's Land Development Regulations, Historic Preservation Ordinance, Section 23.5-4.

Repair or replacement of missing architectural features should be based on accurate duplications of features, substantiated by historical, physical, or pictorial evidence rather than on conjectural designs or because the different architectural elements from other buildings or structures happen to be available for relocation.
Response: The proposed replacement windows are based on the frame vernacular style of architecture in Lake Worth.

(7) Chemical or physical treatments, such as sandblasting, that cause damage to historic materials, shall not be used. The surface cleaning of structures, if appropriate, shall be undertaken using the gentlest means possible.
Response: Not applicable to this project.

(8) Significant archeological resources affected by a project shall be protected and preserved. If such resources must be disturbed, mitigation measures shall be undertaken.
Response: Not applicable to this project.

(9) New additions, exterior alterations or related new construction shall not destroy historic materials that characterize the property. The new construction shall be differentiated from the old and shall be compatible with the massing, size, scale and architectural features to protect the historic integrity of the property and its environment.
Response: The proposed alterations to the existing structure remove the size, shape, and configuration that is distinctive to this structure and the style of architecture.

(10) New additions and adjacent or related new construction shall be undertaken in such manner that, if removed in the future, the essential form and integrity of the historic building and its environment would be unimpaired.
Response: Decreasing the size of the existing structure to accommodate the size of the proposed additions will fundamentally alter the historic structure.

G. What are the effects of the requested change on those elements or features of the structure which served as the basis for its designation and will the requested changes cause the least possible adverse effect on those elements or features?
Response: It is the analysis of Staff that the historic character of the property would be adversely affected by the proposed project as submitted by the Applicant, as outlined above. Decreasing the size of the existing structure to accommodate the size of the proposed additions will fundamentally alter the historic structure.

Section 23.5-4k(2). Additional guidelines for alterations.

In approving or denying applications for certificates of appropriateness for alterations, the HRPB shall also consider the following additional guidelines:

A. Is every reasonable effort being made to provide a compatible use for a property that requires minimal alteration of the building, structure or site and its environment, or to use the property for its originally intended purpose?
Response: No change to the use of the property is proposed at the time.

B. Are the distinguishing original qualities or character of a building, structure or site and its environment being destroyed? The removal or alteration of any historic material or distinctive architectural features shall be avoided whenever possible.
Response: The distinctive shape, size, and configuration of the historic structure is being destroyed.

C. When a certificate of appropriateness is requested to replace windows or doors, the HRPB shall permit the property owner's original design when the HRPB's alternative design would result in an increase in cost of thirty (30) percent above the owner's original cost. The owner shall be required to demonstrate to the HRPB that:

(1) The work to be performed will conform to the original window openings of the structure; and
Response: Due to the extent of the alterations the window design is compatible with the design of the frame vernacular architecture, but do not replicate the existing configurations of windows.
(2) That the replacement windows or doors with less expensive materials will achieve a savings in excess of thirty (30) percent over historically compatible materials otherwise required by this code.
Response: Staff must defer to the applicant.

DOS Form No. HR3E101292
Revised 09/03/00

Historic Preservation Property Tax Exemption Application
Part 1 – Evaluation of Property Eligibility

Read the attached instructions carefully before completing this application. Your application cannot be evaluated unless it is complete and all required supporting materials are provided. In the event of any discrepancy between the application form and other supplementary material submitted with it (such as architectural plans, drawings and specifications), the application form shall take precedence. Type or print clearly in black ink. If additional space is needed, attach additional sheets.

GENERAL INFORMATION (To be completed by all applicants)

1. Property identification and location:

Property Identification Number (from tax records): 38-43-44-21-15=091-0040 *Attach legal description of property*

Address of property: Street 226 S L Street

City Lake Worth County Palm Beach Zip Code 33460

( ) Individually National Register listed
( ) In a National Register district
( ) Locally designated historic property or landmark*
( ) In a locally designated district

** For applications submitted to the Division of Historical Resources, attach a copy of the local designation report for the property and the official correspondence notifying the property owner of designation.*

Name of historic district _____

For locally designated historic properties or landmarks, or properties located in locally designated historic districts, provide the following additional information:

Name of local historic preservation agency/office _____

Mailing Address _____

City _____ State _____ Zip Code _____

Telephone Number (_____) _____

2. Type of request:

(X) Exemption under 196.1997, F.S. (standard exemption)
( ) Exemption under 196.1998, F.S. (exemption for properties occupied by non-profit organizations or government agencies and regularly open to the pubic) *If applying under s. 196.1998, F.S., complete* Question 9 *on page five.*

3. Owner information:

Name of individual or organization owning the property Anne Fairfax Ellett

Mailing address 455 Worth Ave, #303

City Palm Beach State FL Zip code 33480

Daytime Telephone Number (646) 270-1791

If the property is in multiple ownership, attach a list of all owners with their mailing addresses.

Page Two – Historic Preservation Property Tax Exemption Application

Property Identification Number 38-43-44-21-15-091-0040

Property Address 226 S L St, Lake Worth, FL 33460

4. Owner Attestation: I hereby attest that the information I have provided is, to the best of my knowledge, correct, and that I own the property described above or that I am legally the authority in charge of the property. Further, by submission of this Application, I agree to allow access to the property by representatives of the Division of Historical Resources or the Local Historic Preservation Office ,where such office exists, and appropriate representatives of the local government from which the exemption is being requested, for the purpose of verification of information provided in this Application. I also understand that, if the requested exemption is granted, I will be required to enter into a Covenant with the local government granting the exemption in which I must agree to maintain the character of the property and the qualifying improvements for the term of the exemption.

Anne Fairfax Ellett		April 4, 2016
Name	Signature	Date

Complete the following if signing for an organization or multiple owners:

Title	Organization name

EVALUATION OF PROPERTY ELIGIBILITY

(To be completed only for properties in historic or archaeological districts):

5. Description of Physical Appearance: Building within a registered historic district: A one-story, gable roofed, painted wood clapboard residential building, rectilinear in shape and constructed in the 1920's. The original fenestration has been replaced, date unknown and is currently a mix of aluminum or wood, awning and doublehung windows. The front door is contemporary, date unknown. The interior has been stripped of all plaster and partitions by a prior owner and consists of exposed old growth pine studs, rafters, beams and the back of the wood clapboard.

Date of Construction 1920's Date(s) of Alteration(s) unknown

Has building been moved? (X)Yes ( )No If so, when? Raised, unknown date

6. Statement of Significance: Building within a registered historic district: The building sits within an intact group of historic vernacular wood clapboard or stucco residential buildings which were built on small lots (25'x 135')during the 1920's. This building, although modest in size and materials, is significant in that it contributes to the streetscape as a continuation of the style and scale of its neighbors and represents a period of town-building in Florida which is all but lost in other areas of Florida.

Property Identification Number 38-43-44-21-15-091-0040

Property Address 226 S L Street, Lake Worth, FL 33480

7. Photographs and maps:
Attach photographs and maps to application.

Please refer to "TAX FORM ADDENDUM PHOTOS.pdf", included in submission packet.

Historic Preservation Property Tax Exemption Application
Part 2 – Description of Improvements

(To be completed by all applicants):
Complete the blocks below. Include site work, new construction, alterations, etc.

Property Identification Number 38-43-44-21-15-091-0040

Property Address 226 S L Street, Lake Worth, FL 33480

Feature 1

Feature Wood Clapboard
Approx. date of feature 1920's

Describe existing feature and its condition:
Exterior painted pine clapboard, on all fours sides of the one room building. Some clapboards are rotted, with incompatible contemporary fenestration.

Photo no. A1-4 Drawing no. n/a

Describe work and impact on existing feature:
Damaged clapboards will be replaced with new cypress,milled to match original width, thickness.

Feature 2

Feature East facade
Approx. date of feature Altered, date unknown

Describe existing feature and its condition:
Rear facade has been previously altered, and a portion of the original building has been removed by a previous owner.

Photo no. A5 Drawing no. B-5

Describe work and impact on existing feature:
A new addition will be attached to the rear facade of the existing structure, differentiated by the use of concrete block, stucco and heavy timber framing. Wood double hung windows will be used.

Feature 3

Feature Existing site plan
Approx. date of feature ~~original~~ plat

Describe existing feature and its condition:
The original sloping site has been compromised by the installation of a parking lot next door which is level with the lowest portion of the site.

Photo no. A6 Drawing no. B-6 & 7

Describe work and impact on existing feature:
New site work will include the building of a retaining wall, which will also be a swimming pool wall along the south side of the site. This will will retain the erosion caused by the parking lot.

Page Five – Historic Preservation Property Tax Exemption Application

Property Identification Number 38-43-44-21-15-091-0040

Property Address 226 S L St. Lake Worth, FL 33460

Feature 4

Feature asphalt shingle roof
Approx. date of feature contemporary

Describe existing feature and its condition:
Existing asphalt shingle roof on 1 x 6 pine substrate. Not original to the house.

Photo no. N/A Drawing no.

Describe work and impact on existing feature:
New roof shall be green asphalt shingles

Feature 5

Feature windows
Approx. date of feature contemporary

Describe existing feature and its condition:
Existing windows are a mixture of aluminum, awning and double hung windows, none of which can be determined as original.

Photo no. A7-8 Drawing no. SEE MANUF. BROCHURE

Describe work and impact on existing feature:
New wood double hung, single glazed, true divided light painted windows will replace contemporary windows in openings. The original sizes of the openings have been compromised therefore new openings, consistent with the neighborhood standard will be restored.

Feature 6

Feature front door
Approx. date of feature contemporary

Describe existing feature and its condition:
Wood stiles and rails with obscured glass louvers

Photo no. A-9 Drawing no. B-10

Describe work and impact on existing feature:
New painted pine door, 6 panel solid wood.

Property Identification Number 38-43-44-21-15-091-0040

Property Address 226 S L St. Lake Worth, FL 33460

Feature 7

Feature rectilinear attic vent
Approx. date of feature original?

Describe existing feature and its condition:
Vent on front of house positioned at the top of the gable. Wood frame, painted, with a fiberglass screen. The vent is non-functional as the clapboards run behind it

Photo no. A-10 Drawing no. B-10

Describe work and impact on existing feature:
Vent shall be restored to functionality with a screen and opening behind it.

Feature 8

Feature overhang on front eave
Approx. date of feature original

Describe existing feature and its condition:
Wood overhang on the roof, projects over the front gable.

Photo no. A-12 Drawing no. B-9

Describe work and impact on existing feature:
Reduce the overhang to 8"

Feature 9

Feature Porch roof on brackets
Approx. date of feature not original

Describe existing feature and its condition:
Decorative feature; added later, as it is made of contemporary wood.

Photo no. A-11 Drawing no. B-10

Describe work and impact on existing feature:
This feature shall be repaired as necessary (esp; shingle roof to be replaced) but otherwise kept as-is.

Page Seven – Historic Preservation Property Tax Exemption Application

Property Identification Number 38-43-44-21-15-091-0040

Property Address 226 S L St. Lake Worth, FL 33460

Property Use (To be completed by all applicants):

1. Use(s) before improvement: Residence, single family

2. Proposed use(s) after improvement: Residence, single family

Special Exemption (Complete only if applying for exemption under s. 196.1998, F.S. (property occupied by non-profit organization or government agency and regularly open to the public):

NOTE: Applicants should check with local officials to determine whether or not the exemption program offered by their municipal government and/or county allows the special exemption provided by s. 196.1998, F.S.

1. Identify the governmental agency or non-profit organization that occupies the building or archaeological site:

_____

2. How often does this organization or agency use the building or archaeological site? _____

3. For buildings, indicate the total useable area of the building in square feet. (For archaeological sites, indicate the total area of the upland component in acres)_____square feet( ) acres( )

4. How much area does the organization or agency use?_____square feet( ) acres( )

5. What percentage of the usable area does the organization or agency use?_____%

6. Is the property open to the public ( )Yes ( )No If so, when?_____

7. Are there regular hours? ( )Yes ( )No If so, what are they? _____

_____

8. Is the property also open by appointment? ( )Yes ( )No

9. Is the property open only by appointment? ( )Yes ( )No

Feature 1 Wood Clapboard

All Facades

PHOTO A-1 WEST FAÇADE

PHOTO A-2 SOUTH FAÇADE

PHOTO A-3 EAST FAÇADE

PHOTO A-4 NORTH FAÇADE

Feature 2 East façade

PHOTO A-5 SHOWING PREVIOUS ALTERATION OF EAST END OF STRUCTURE

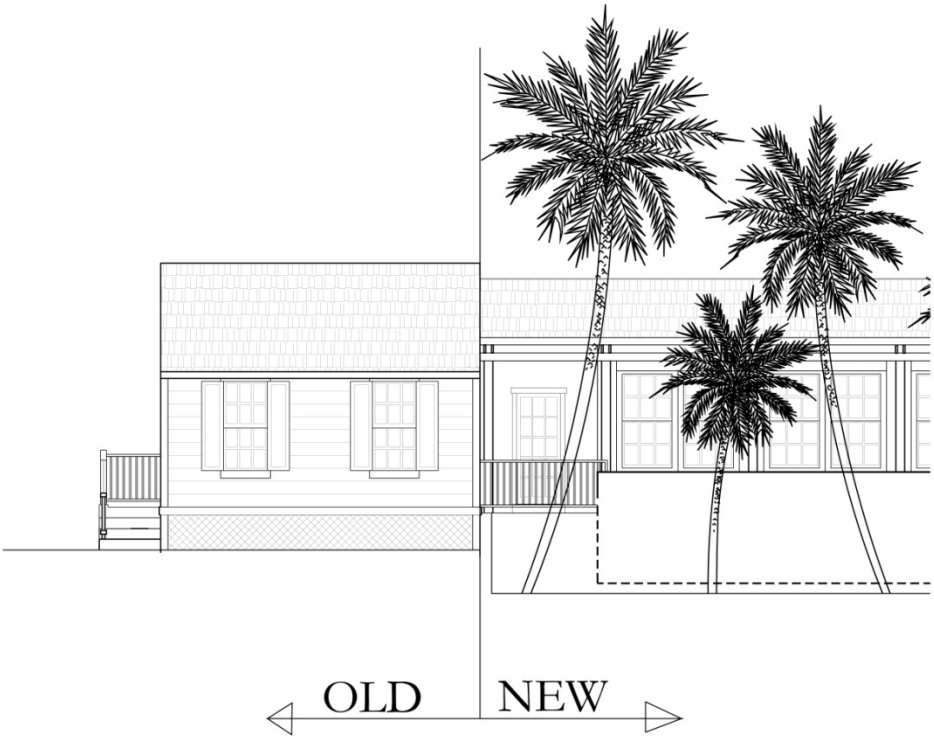

DRAWING B-5 SHOWING NEW ADDITION TO STRUCTURE

Feature 3 Site Plan

PHOTO A-6 VIEW FROM PARKING LOT SHOWING GRADE CHANGE

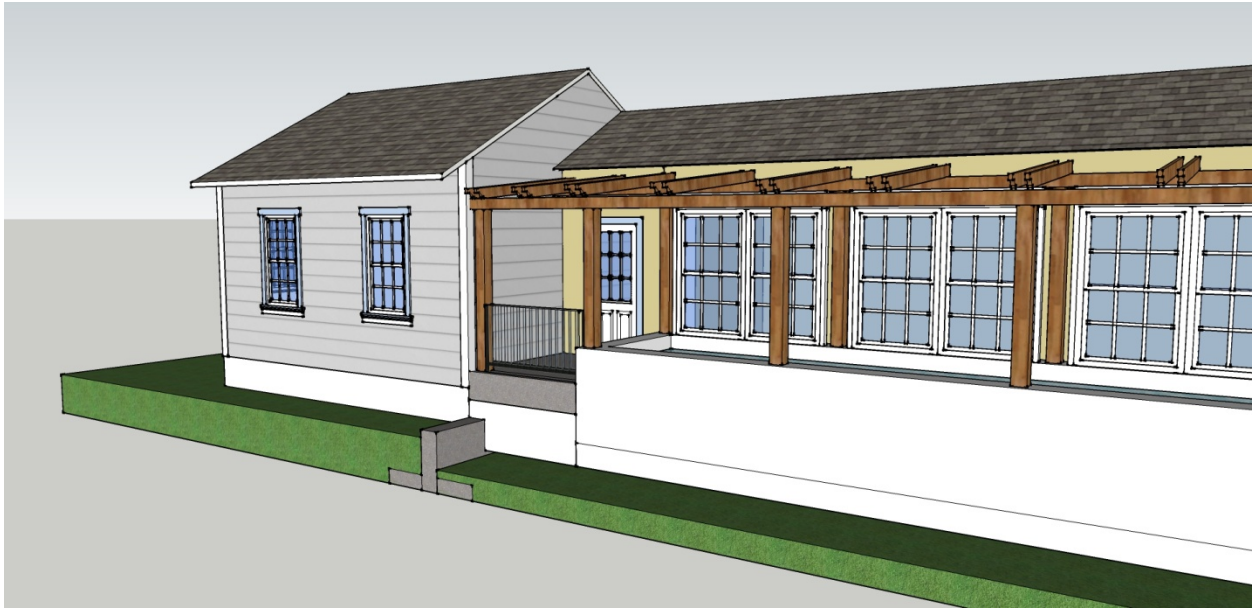

DRAWING B-6 SHOWING RETAINING WALL AT SOUTH LOT LINE TO ACCOMMODATE GRADE CHANGE

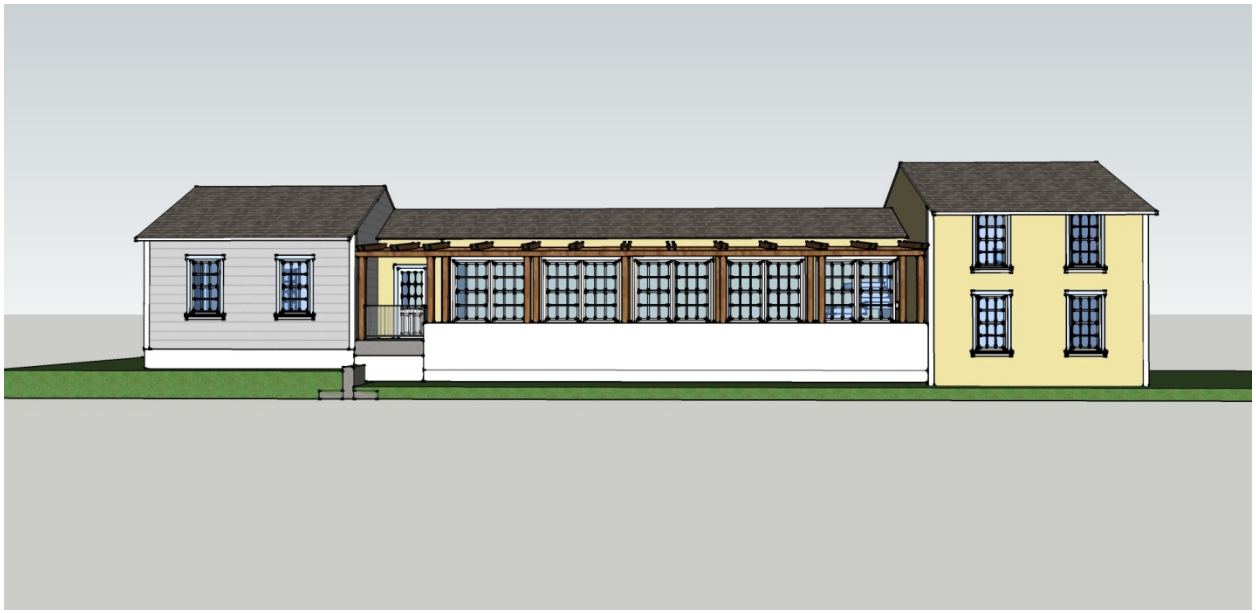

DRAWING B-7 SHOWING SOUTH ELEVATION WITH RETAINING WALL TO ACCOMMODATE GRADE CHANGE

Feature 4 Shingle Roof

SEE ATTACHED PRODUCT INFO Enviroshake Brochure May 25, 2015

Feature 5 Windows

PHOTO A-7 CLOSEUP OF FRONT WINDOW (ALUMINUM)

PHOTO A-7 CLOSEUP OF SIDE WINDOWS (WOOD, DOUBLE-HUNG, VARIOUS ORIENTATIONS)

SEE ATTACHED PRODUCT INFO “BROSCO Window Literature”

Feature 6 Front Door

PHOTO A-9 CLOSEUP OF FRONT DOOR

DRAWING B-10 SHOWING FRONT EXTERIOR SOLID WOOD DOOR

Feature 7 Attic Vent

PHOTO A-10 CLOSE-UP OF NON-FUCTIONAL ATTIC VENT

PHOTO B-10 NEW WEST FAÇADE WITH REFURBISHED ATTIC VENT

Feature 8 Eave Overhang

PHOTO A-12 GABLE-END EAVE

DRAWING B-9 FRONT RENDERING SHOWING EAVE OVERHANG

Feature 9 Front Porch Shelter

PHOTO A-11 PORCH SHELTER OVERHANG

PHOTO B-10 NEW WEST FAÇADE WITH DOUBLE STAIRS AND PORCH SHELTER OVERHANG

Additional Photos of Interior Space of Existing Structure:

PHOTO A-13 EXISTING INTERIOR

PHOTO A-14 EXISTING INTERIOR

PHOTO A-14 EXISTING INTERIOR

226 S L Street, restoration, addition and new accessory building

A. What is the effect of the proposed work on the landmark or the property upon which such work is to be done? The restoration on the existing structure will restore the building close to its original appearance to the extent that it is known. As there is no documentary evidence of the original appearance of the house itself, we are using the neighborhood architecture as a model for the design of the restoration as this house does not differ from the standard vernacular cottage of its immediate neighbors. The current appearance of the house is marred by the installation of a mix of inappropriate aluminum and salvaged windows and doors. The new proposed windows are to be true-divided light, single-glazed, painted wood with casements on the front façade, and double hung on the side and rear. Painted wood shutters are proposed for all of the fenestration on the east, west and south facades. The new proposed door is painted solid wood, with 6 panels, replacing a modern one. The current overhang on the front façade is proposed to be removed as it is a modern addition.

The house was raised sometime in its past, and it has no front stoop. A new painted cmu and stucco stoop with a painted wood rail will be installed at the front of the house. The new cmu addition in the rear will be set back by 6" from the side as to differentiate itself from the original cottage. The addition will share the characteristics of the original cottage of a gable roof, double hung windows, similar massing, scale and color, but will be constructed of cmu and stucco to further differentiate if from the historic structure. A freestanding accessory single-story, single-car garage building will also be constructed of cmu and stucco. The new roofs on both the historic cottage, its new addition and the garage will be a composite "Eniviroshingle" which besides being an approved Miami Dade product often used in the Bahamas, resembles the original wood shake that would have originally been found on the historic cottages in Lake Worth.

B. What is the relationship between such work and other structures on the landmark site or other property in the historic district?

The original site, on the east side of south L Street between 2nd and 3rd Avenues, measuring 25' x 135, backs up to an alley. It has an approximate 2' downward slope to the east. At one point in time the property next door to the south became a flat parking lot, creating a situation whereby the soil on our property is eroding and falling into the lot next door because the parking lot was improperly installed without a retaining wall. This will be rectified with a new retaining wall, which will also be a pool wall for a proposed new pool. To the north of the site, the new addition will be within the proper setback.

C. To what extent will the historic, architectural, or archaeological significance, architectural style, design, arrangement, texture, materials and color of the landmark or the property be affected?

The existing cottage has already been tampered with by the prior owners to a great extent. The arrangement of the windows are not in their original positions so we propose to install them consistent with the design and arrangement of other similar cottages in the district. We propose to remove several feet of the rear façade which is not original to the cottage as there was an addition removed at some point in time. The new addition will start at the rear of the cottage. The appearance of the original historic character of the cottage will be restored, and new wood clapboard will be milled to match that of the existing façade material in size and thickness on all four sides. The architectural style will remain that of a traditional vernacular wood cottage, typical of the district. The scale, height, window and door arrangement, roof-line, will all be consistent with its near and immediate neighbors.

D. Would denial of a certificate of appropriateness deprive the property owner of reasonable beneficial use of his property?

The current cottage has been stripped of all materials inside and as such is not a viable residence. There is no kitchen, bathroom, or bedroom. Measuring just 18" x 22", it in itself is too small to be a worthwhile residence. The addition, the restoration of the cottage itself, and the garage accessory building will allow the property to become a proper residence and will restore use of the property to its original use. Without approval the current property will be unoccupiable and as such will remain the eyesore that it is today.

E. Are the applicant's plans technically feasible and capable of being carried out within a reasonable time?

The applicant owner is a licensed architect and has had a 25 year career in residential design so it is reasonable to assume that this small property will be able to be brought to fruition within a reasonable time frame.

F. Do the plans satisfy the applicable portions of the general criteria contained in the United States Secretary of the Interior's Standards for Rehabilitation then in effect or as they may be revised from time to time? The current version of the Secretary's Guidelines provides as follows:

(1) A property shall be used for its historic purpose or be placed in a new use that requires minimal change to the defining characteristics of the building and its site and environment.

The property use will not change.

(2) This historic character of the property shall be retained and preserved. The removal of historic materials or alteration of features and spaces that characterize a property shall be avoided.

The historic character will be retained and preserved through the restoration of the cottage. Historic material will be retained wherever possible and no alterations will occur which will change the general shape of the structure.

(3) Each property shall be recognized as a physical record of its time, place and use. Changes that create a false sense of historical development, such as adding conjectural features or architectural elements from other buildings, shall not be undertaken.

There will be no added conjectural features other than the new windows and door which will be replacing modern ones which have been inappropriately installed by previous owners. As previously outlined, the new windows and doors will be of the same size, and type found in the immediate vicinity and will be in keeping with the historic character of the district.

(4) Most properties change over time; those changes that have acquired historic significance in their own right shall be retained and preserved.

The only changes which has happened on this small cottage are the installation of inappropriate windows and doors. There is no historical significance attached to these modern interventions.

(5) Distinctive features, finishes and construction techniques or examples of craftsmanship that characterize a historic property shall be preserved.

To the extent that it can be achieved, the historic wood clapboard will be preserved in situ, repaired and restored as possible. Decayed or rotted wood will have to be replaced.

(6) Deteriorated architectural features shall be repaired rather than replaced, wherever possible. It is the intention that deteriorated architectural features shall be repaired rather than replaced, wherever possible.

7) In the event replacement is necessary, the new material will match the material being replaced in composition, design, color, texture, and other visual qualities. Repair or replacement of missing architectural features will be based on accurate duplications of features, substantiated by historical, physical, or pictorial evidence when available, rather than on conjectural designs or because the different architectural elements from other buildings or structures happen to be available for relocation.

(8) Chemical or physical treatments, such as sandblasting, that cause damage to historic materials, shall not be used. The surface cleaning of structures, if appropriate, shall be undertaken using the gentlest means least likely.

(9) Significant archeological resources affected by a project shall be protected and preserved. If such resources must be disturbed, mitigation measures will be undertaken.

(10) New additions, exterior alterations or related new construction will not destroy historic materials that characterize the property. The new construction shall be differentiated from the old by use of new construction materials, ie cmu and stucco and will be compatible with the massing, size, scale and architectural features intended to protect the historic integrity of the property and its environment.

G. What are the effects of the requested change on those elements or features of the structure which served as the basis for its designation and will the requested changes cause the least possible adverse effect on those elements or features?

The effects of the requested change on the building, most notably the addition of new windows and a new door will not effect the basis for designation as the door and windows were modern at the time of designation and not part of the notable features of the structure. Rather the cottage is part of an ensemble of similar small scaled, three bay wood vernacular residences which make up the district. The restoration of the façade will not effect the bay system or placement of the windows.

H. Such other supplemental guidelines for restoration and rehabilitation of historic properties which the HRPB may from time to time adopt

A variance is sought for new construction at 226 S L Street, Lake Worth. The house and garage as designed has a lot coverage of 1492.93 square feet, and the maximum allowable is 1,350Thus we are over the allowable lot coverage by 142.93 square feet. The proposed structures are in compliance with all other zoning requirements ie permeability ratio, floor area ratio, height, wall height, and setbacks.

1. Special circumstances or conditions exist which are peculiar to the land or building for which the variance is sought and do not apply generally to nearby lands and buildings, and that this is not the result of action of the applicant;
1) A special condition exists whereby the current structure on the site is in derelict shape, structurally unsound and consisting of decayed and rotted wood. The previous owner allowed the building to get to this current state and as such, it is very onerous to restore and rehabilitate. The applicant is willing to restore the structure, rather than apply for demolition but asks that they be allowed to build 150 more square feet than currently allowed by zoning. This extra square footage will allow the applicant a simple one-car garage in the rear of the lot, accessible by the alley which meets all other requirements.

2. The strict application of the provision of these LDRs would deprive the applicant of any reasonable use of the land or building for which the variance is sought;
2) By applying the strict application of the zoning provisions, the applicant would be denied the ability to build a garage on the site, and therefore would be forced to seek a demolition permit for the current structure on the site in order to alter the design to comply with the lot coverage requirements.

3. That the variance proposed is the minimum variance which makes possible the reasonable use of the land or building; and
3) By designing a small one-car garage, the applicant is proposing the most minimal of requirements for a reasonable use of the land and building.

4. That the granting of the variance will be in accordance with the spirit and purpose of this chapter, and will not be unduly injurious to contiguous property or the surrounding neighborhood nor otherwise detrimental to the public welfare. In deciding appeals from decisions of the development review official or in granting variances, the decisionmaking board is authorized and required to impose any reasonable conditions and safeguards it deems to be necessary or desirable, and violation of such conditions or safeguards when made a part of the terms under which a variance is granted, shall be deemed to be a violation of these LDRs.
4) The granting of the variance of 142.93 square feet is a negligible amount, and will not have a deleterious effect on the contiguous properties. The lot to the south is a parking lot for the adjacent nursing home, and the lot to the south has its own storage structure at the rear.

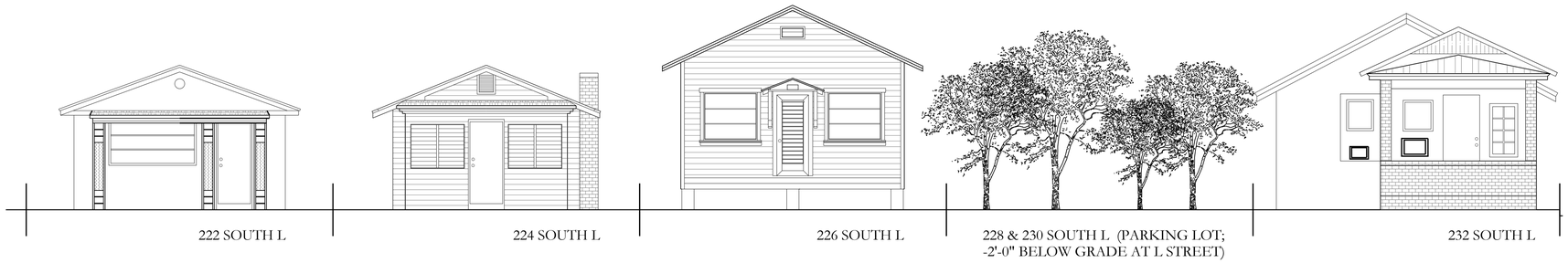

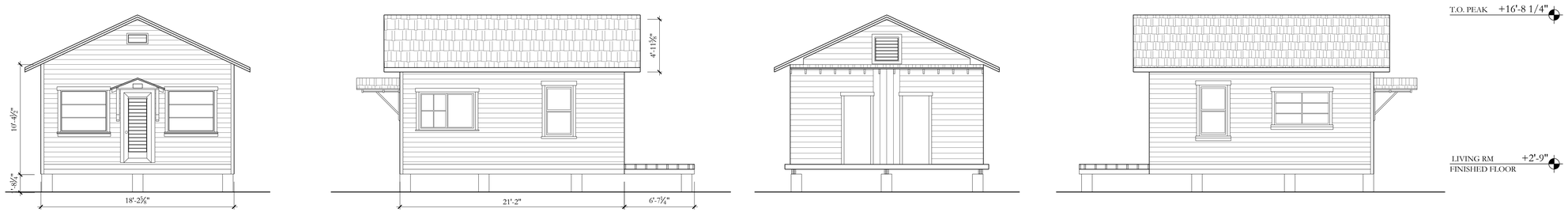

5 EXISTING EAST ELEVATION
3/16"= 1'-0"

4 EXISTING SOUTH ELEVATION
3/16"= 1'-0"

3 EXISTING WEST ELEVATION
3/16"= 1'-0"

2 EXISTING NORTH ELEVATION
3/16"= 1'-0"

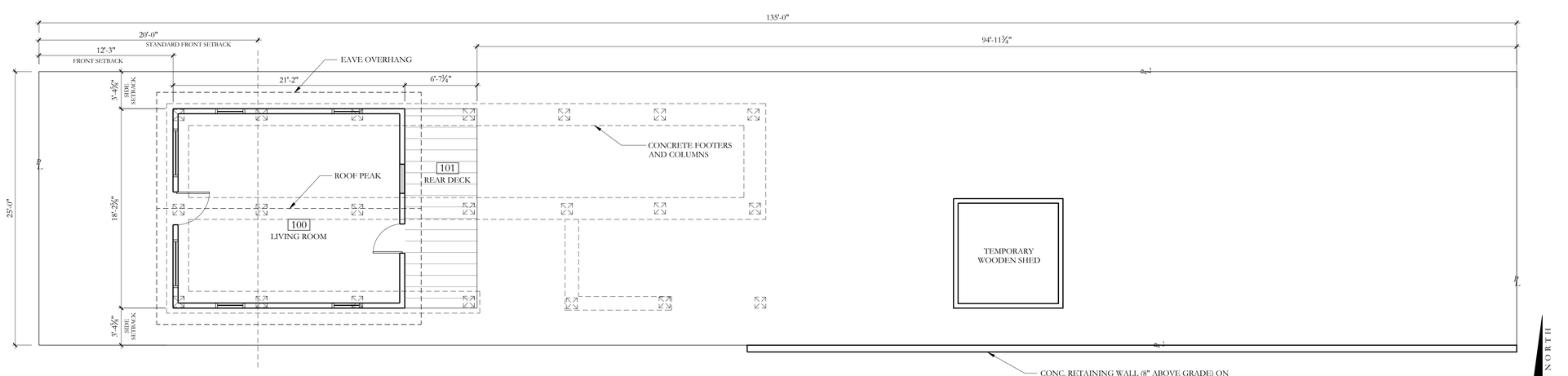

1 EXISTING FIRST FLOOR PLAN
3/16"= 1'-0"

ADDITION

226 SOUTH L STREET
LAKE WORTH, FLORIDA

SHEET TITLE

STREETSCAPE
EXISTING ELEVATIONS & PLAN

DATE	SHEET NO
29 APR. 2016	A-001
SCALE 3/16"=1'-0"	
BY JLP	

FAIRFAX & SAMMONS
NEW YORK – PALM BEACH

FAIRFAX & SAMMONS ARCHITECTS PC
67 GANSEVOORT STREET, NEW YORK CITY 10014
TELEPHONE (212) 255-0704
FACSIMILE (212) 229-9517 – FAIRFAXANDSAMMONS.COM

DRAWINGS, SPECIFICATIONS AND OTHER DOCUMENTS PREPARED BY THE ARCHITECT ARE THE INSTRUMENTS OF THE ARCHITECT'S SERVICE AND SHALL REMAIN THE PROPERTY OF THE ARCHITECT, WHETHER OR NOT THE PROJECT FOR WHICH THEY ARE INTENDED IS CONSTRUCTED OR NOT. THE ARCHITECT'S DRAWINGS, SPECIFICATIONS AND OTHER DOCUMENTS WILL NOT BE USED ON ANY OTHER PROJECTS FOR ADDITIONS TO THIS PROJECT AND/OR FOR COMPLETION OF THIS PROJECT BY OTHERS, EXCEPT BY AGREEMENT IN WRITING AND WITH APPROPRIATE COMPENSATION TO THE ARCHITECT.

© 2014 FAIRFAX & SAMMONS ARCHITECTS PC

LEGAL DESCRIPTION

LOT 4, BLOCK 91, THE PALM BEACH FARMS CO. PLAT NO. 2, THE TOWNSITE OF LUCERNE, ACCORDING TO THE PLAT THEREOF, AS RECORDED IN PLAT BOOK 2, PAGES 29 THROUGH 49, INCLUSIVE, IN THE PUBLIC RECORDS OF PALM BEACH COUNTY, FLORIDA.

FLOOD ZONE: C
COMMUNITY NUMBER: 120213
PANEL: 0002
SUFFIX: C

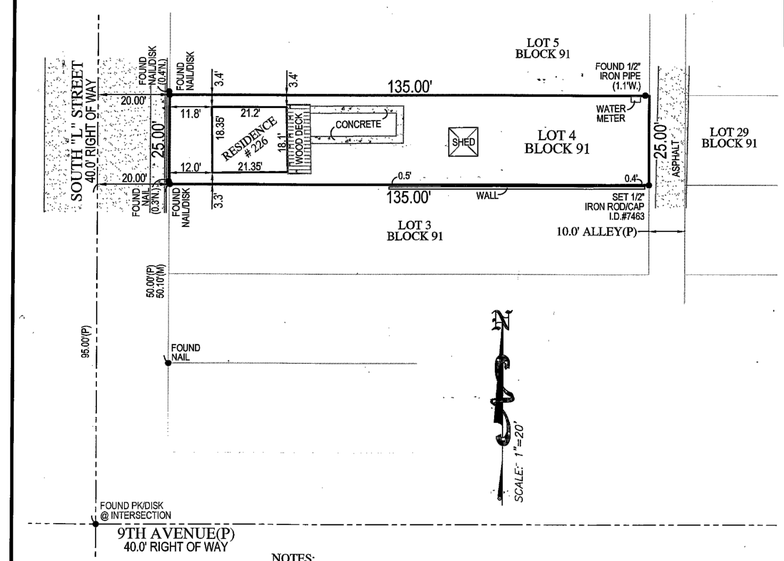

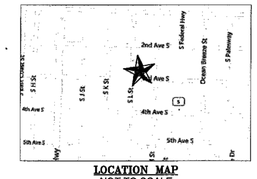

LOCATION MAP
NOT TO SCALE

LEGEND

A/C	AIR CONDITIONER
B.F.P.	BACKFLOW PREVENTER
C.M.	CONCRETE MONUMENT
CATV	CABLE RISER
C.B.S.	CONCRETE BLOCK STRUCTURE
EL	ELEVATION
F.F.	FINISHED FLOOR
F.C.M.	FOUND CONCRETE MONUMENT
F.P.K.	FOUND PARKER-KALON NAIL
F.IR.	FOUND IRON ROD
F	FOUND
I.D.	IDENTIFICATION
L	LENGTH
L.B.	LICENSED BUSINESS
M	MEASURED
N.T.S.	NOT TO SCALE
N&D	NAIL & DISC
N.A.V.D.	NORTH AMERICAN VERTICAL DATUM
N.G.V.D.	NATIONAL GEODETIC VERTICAL DATUM
O.R.B.	OFFICIAL RECORDS BOOK
P	PLAT
PSM	PROFESSIONAL SURVEYOR AND MAPPER
P.R.M.	PERMANENT REFERENCE MONUMENT
PG.	PAGE
P.B.	PLAT BOOK
PK	PARKER KYLON NAIL
R	RADIUS
S.I.R.	SET IRON ROD & CAP
S.P.K.	SET PARKER-KALON NAIL
S.S.	SHIP SPIKE
TAN	TANGENT
T.B.M.	TEMPORARY BENCH MARK
TYP	TYPICAL
U.E.	UTILITY EASEMENT
U.P.	UTILITY POLE
℄	CENTERLINE
⊥	PROPERTY LINE
&	AND
#	NUMBER
Δ	DELTA OR CENTRAL ANGLE
CONC	CONCRETE

NOTES:

1. LEGAL DESCRIPTION PROVIDE BY CLIENT
2. NO SEARCH OF THE PUBLIC RECORD FOR THE PURPOSE OF ABSTRACTING TITLE WAS PERFORMED BY THIS OFFICE
3. NO SUBSURFACE IMPROVEMENTS WERE LOCATED AS PART OF THIS SURVEY
4. ALL ANGLES AND DISTANCES SHOWN HEREON ARE BOTH RECORD AND MEASURED UNLESS OTHERWISE NOTED

Clyde O. McNeal PSM #2883
THIS SURVEY IS NOT VALID WITHOUT THE SIGNATURE AND THE ORIGINAL RAISED SEAL OF A FLORIDA LICENSED SURVEYOR AND MAPPER

BOUNDARY SURVEY OF
226 SOUTH "L" STREET
LAKE WORTH, FL 33460
PREPARED FOR
ANNE FAIRFAX ELLETT

Job No. C-13268
Field Bk. 07-20-2015
Scale 1"=20'
Page 1 of 1

COMPASS SURVEYING
6250 N. MILITARY TRAIL
SUITE 102
WEST PALM BEACH, FL 33407
www.compassurveying.net
L.B. 7463 PHONE: 561.640.4800 FAX: 561.640.0576

ADDITION
226 SOUTH L STREET
LAKE WORTH, FLORIDA

SHEET TITLE

DATE
29 APR. 2016

SCALE
1"=20'

BY

SHEET NO
SURVEY

FAIRFAX & SAMMONS
NEW YORK - PALM BEACH
FAIRFAX & SAMMONS ARCHITECTS PC
67 GANSEVOORT STREET, NEW YORK CITY 10014
TELEPHONE (212) 255-0704
FACSIMILE (212) 229-9517 - FAIRFAXANDSAMMONS.COM

DRAWINGS, SPECIFICATIONS AND OTHER DOCUMENTS PREPARED BY THE ARCHITECT ARE THE INSTRUMENTS OF THE ARCHITECT'S SERVICE AND SHALL REMAIN THE PROPERTY OF THE ARCHITECT, WHETHER OR NOT THE PROJECT FOR WHICH THEY ARE INTENDED IS CONSTRUCTED OR NOT. THE ARCHITECT'S DRAWINGS, SPECIFICATIONS AND OTHER DOCUMENTS WILL NOT BE USED ON ANY OTHER PROJECTS FOR ADDITIONS TO THIS PROJECT AND/OR FOR COMPLETION OF THIS PROJECT BY OTHERS, EXCEPT BY AGREEMENT IN WRITING AND WITH APPROPRIATE COMPENSATION TO THE ARCHITECT.

© 2014 FAIRFAX & SAMMONS ARCHITECTS PC

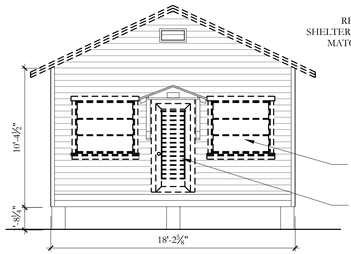

5 DEMO EAST ELEVATION
3/16"= 1'-0"

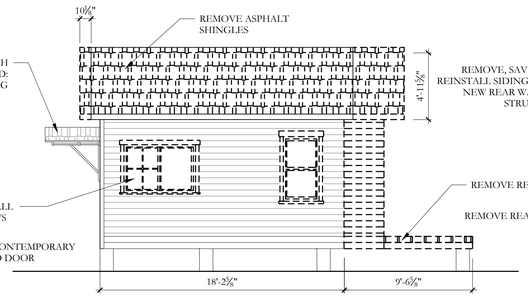

4 DEMO SOUTH ELEVATION
3/16"= 1'-0"

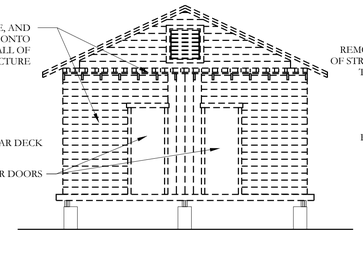

3 DEMO WEST ELEVATION
3/16"= 1'-0"

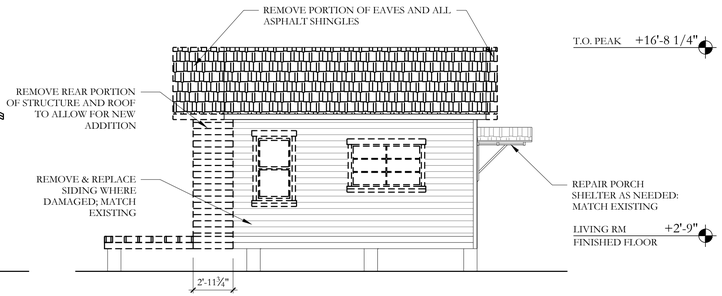

2 DEMO NORTH ELEVATION
3/16"= 1'-0"

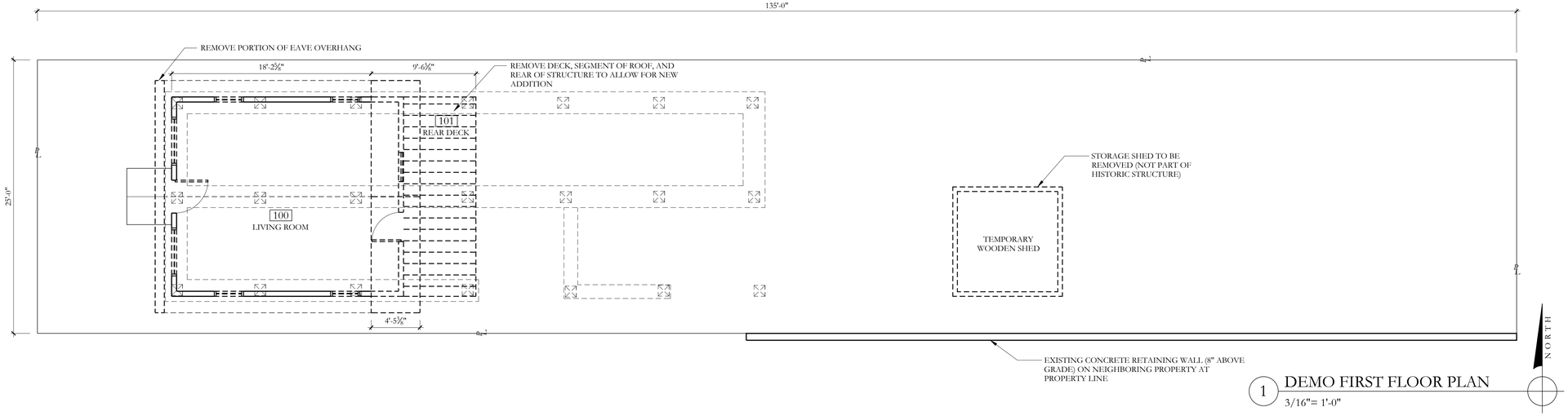

1 DEMO FIRST FLOOR PLAN
3/16"= 1'-0"

ADDITION

226 SOUTH L STREET
LAKE WORTH, FLORIDA

SHEET TITLE

DEMO PLAN

DATE 29 APR. 2016	**SHEET NO** A-002
SCALE 3/16"=1'-0"	
BY JLP	

FAIRFAX & SAMMONS
NEW YORK – PALM BEACH

FAIRFAX & SAMMONS ARCHITECTS PC
67 GANSEVOORT STREET, NEW YORK CITY 10014
TELEPHONE (212) 255-0704
FACSIMILE (212) 229-9517 – FAIRFAXANDSAMMONS.COM

DRAWINGS, SPECIFICATIONS AND OTHER DOCUMENTS PREPARED BY THE ARCHITECT ARE THE INSTRUMENTS OF THE ARCHITECT'S SERVICE AND SHALL REMAIN THE PROPERTY OF THE ARCHITECT, WHETHER OR NOT THE PROJECT FOR WHICH THEY ARE INTENDED IS CONSTRUCTED OR NOT. THE ARCHITECT'S DRAWINGS, SPECIFICATIONS AND OTHER DOCUMENTS WILL NOT BE USED ON ANY OTHER PROJECTS FOR ADDITIONS TO THIS PROJECT AND/OR FOR COMPLETION OF THIS PROJECT BY OTHERS, EXCEPT BY AGREEMENT IN WRITING AND WITH APPROPRIATE COMPENSATION TO THE ARCHITECT.

© 2014 FAIRFAX & SAMMONS ARCHITECTS PC

SITE DATA TABLE

	EXISTING	PROPOSED	MAX. ALLOWED
LOT SIZE	3375 SQ FT		
LOT COVERAGE	385.63 SQ FT	1494.81 SQ FT	1350 SQ FT
F.A.R.	.11	.55	.55
IMPERMEABLE SURFACE	705.78 SQ FT (21%)	1847.94 SQ FT (55%)	2025 SQ FT (60%)
SETBACKS; FRONT	12'-3"	12'-3"	20'-0" (MIN.)
SIDE	3'-4 $\frac{12}{16}$"	3'-4 $\frac{12}{16}$"	3'-0" (MIN.)
REAR	94.98' MAIN BLDG 41'-5 $\frac{7}{16}$" ACCESSORY BLDG	36.82' MAIN BLDG 5' ACCESSORY BLDG	13.5' MAIN BLDG (MIN.) 5' ACCESSORY BLDG
HEIGHT FROM BASE PLANE			
ROOF	16'-8 $\frac{1}{4}$"	19'-5 $\frac{1}{4}$"	24'-0"
WALL @ SIDE SETBACK	11'-10 $\frac{3}{4}$"	14'-0"	14'-0"

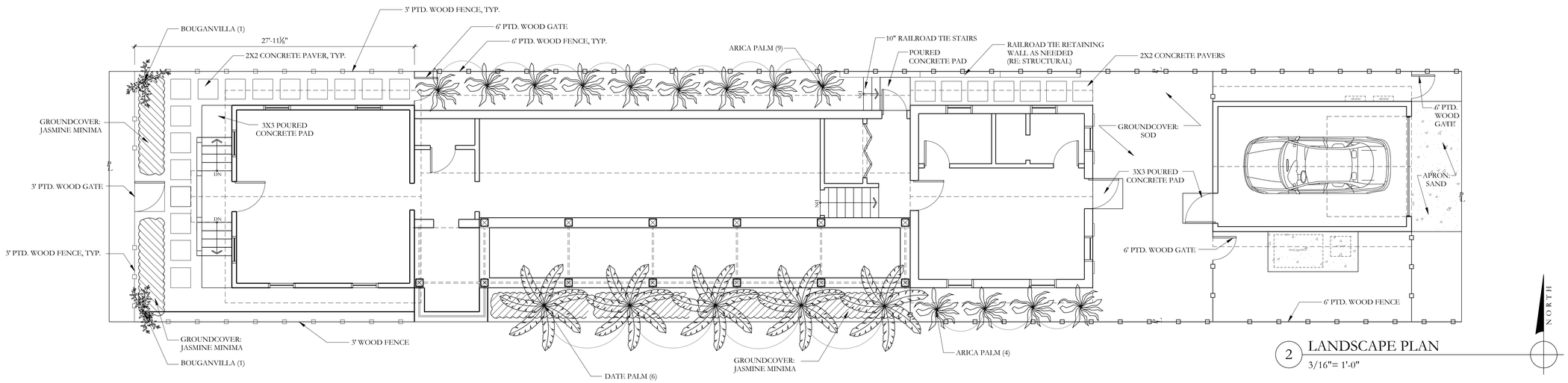

2 LANDSCAPE PLAN
3/16"= 1'-0"

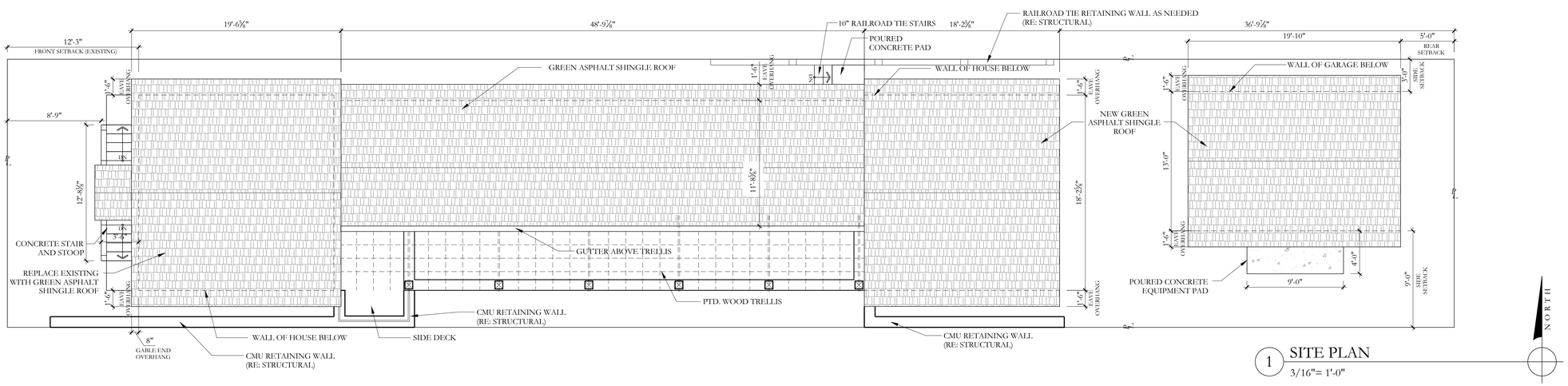

1 SITE PLAN
3/16"= 1'-0"

ADDITION

226 SOUTH L STREET
LAKE WORTH, FLORIDA

SHEET TITLE
SITE PLAN
LANDSCAPE PLAN

DATE 29 APR. 2016

SCALE 3/16"=1'-0"

BY JLP

SHEET NO A-100

FAIRFAX & SAMMONS
NEW YORK ~ PALM BEACH

FAIRFAX & SAMMONS ARCHITECTS PC
67 GANSEVOORT STREET, NEW YORK CITY 10014
TELEPHONE (212) 255-0704
FACSIMILE (212) 229-9517 ~ FAIRFAXANDSAMMONS.COM

DRAWINGS, SPECIFICATIONS AND OTHER DOCUMENTS PREPARED BY THE ARCHITECT ARE THE INSTRUMENTS OF THE ARCHITECT'S SERVICE AND SHALL REMAIN THE PROPERTY OF THE ARCHITECT, WHETHER OR NOT THE PROJECT FOR WHICH THEY ARE INTENDED IS CONSTRUCTED OR NOT. THE ARCHITECT'S DRAWINGS, SPECIFICATIONS AND OTHER DOCUMENTS WILL NOT BE USED ON ANY OTHER PROJECTS FOR ADDITIONS TO THIS PROJECT AND/OR FOR COMPLETION OF THIS PROJECT BY OTHERS, EXCEPT BY AGREEMENT IN WRITING AND WITH APPROPRIATE COMPENSATION TO THE ARCHITECT.

© 2014 FAIRFAX & SAMMONS ARCHITECTS PC

DOOR AND WINDOW SCHEDULE

DOOR TYPE	TYPE	DIMENSIONS	COMMENTS	FINISH
A-1	EXTERIOR	36X80	KEYED TO MATCH	PAINTED
B-1	INTERIOR	30X78	THUMB LOCKS	PAINTED
B-2	INTERIOR	30X80	THUMB LOCKS	PAINTED
B-3	BI-FOLD CLOSET	(2 PR)16X72	LOUVERED	PAINTED
B-4	BI-FOLD CLOSET	(1 PR)15X60	LOUVERED	PAINTED
WINDOW TYPE		SH		
A	CASEMENT/TRANSOM	30X61 19" AFF	TEMPERED GLASS	PAINTED
B	DOUBLE HUNG	36X69 18" AFF	TEMPERED GLASS	PAINTED
C	FIXED	30X32 48" AFF		PAINTED

NOTE: ALL WINDOWS WILL HAVE ARMOR SCREEN FABRIC SHUTTERS

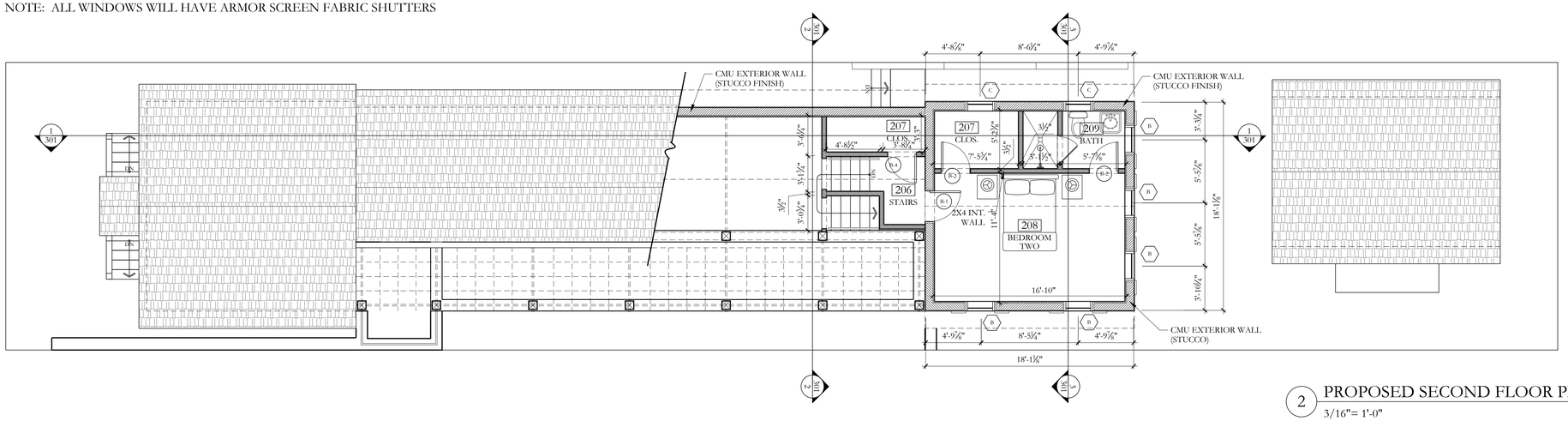

2 PROPOSED SECOND FLOOR PLAN
3/16"= 1'-0"

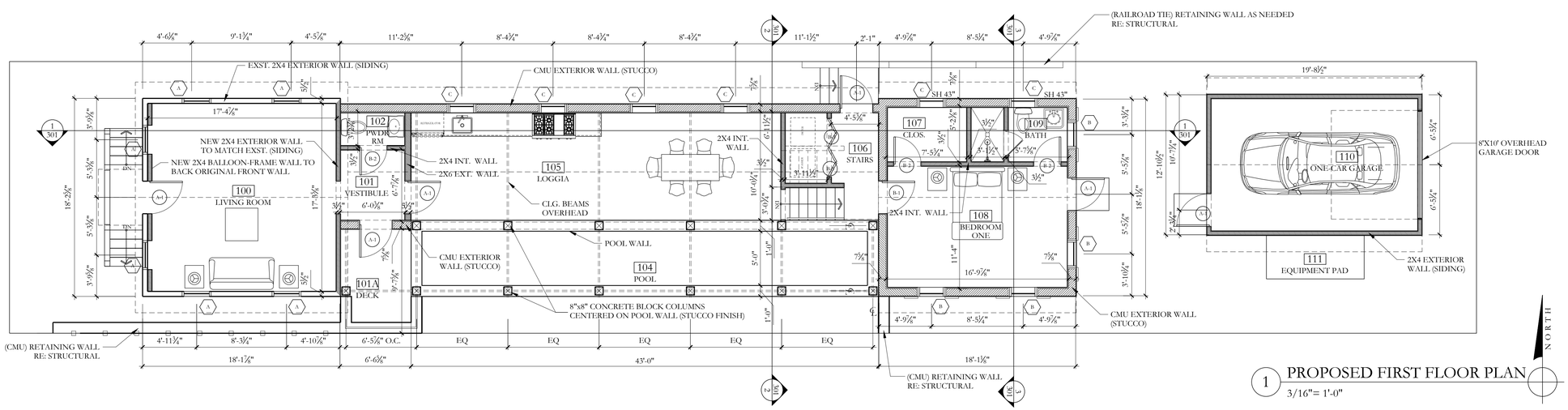

1 PROPOSED FIRST FLOOR PLAN
3/16"= 1'-0"

CONSTRUCTION KEY:

PROPOSED NEW WALL

EXISTING WALL TO REMAIN

ADDITION

226 SOUTH I. STREET
LAKE WORTH, FLORIDA

SHEET TITLE

FIRST FLOOR PLAN
SECOND FLOOR PLAN

DATE
29 APR. 2016

SHEET NO
A-101

SCALE
3/16"=1'-0"

BY
JLP

FAIRFAX & SAMMONS
NEW YORK ~ PALM BEACH

FAIRFAX & SAMMONS ARCHITECTS PC
67 GANSEVOORT STREET, NEW YORK CITY 10014
TELEPHONE (212) 255-0704
FACSIMILE (212) 229-9517 ~ FAIRFAXANDSAMMONS.COM

DRAWINGS, SPECIFICATIONS AND OTHER DOCUMENTS PREPARED BY THE ARCHITECT ARE THE INSTRUMENTS OF THE ARCHITECT'S SERVICE AND SHALL REMAIN THE PROPERTY OF THE ARCHITECT, WHETHER OR NOT THE PROJECT FOR WHICH THEY ARE INTENDED IS CONSTRUCTED OR NOT. THE ARCHITECT'S DRAWINGS, SPECIFICATIONS AND OTHER DOCUMENTS WILL NOT BE USED ON ANY OTHER PROJECTS FOR ADDITIONS TO THIS PROJECT AND/OR FOR COMPLETION OF THIS PROJECT BY OTHERS, EXCEPT BY AGREEMENT IN WRITING AND WITH APPROPRIATE COMPENSATION TO THE ARCHITECT.

© 2014 FAIRFAX & SAMMONS ARCHITECTS PC

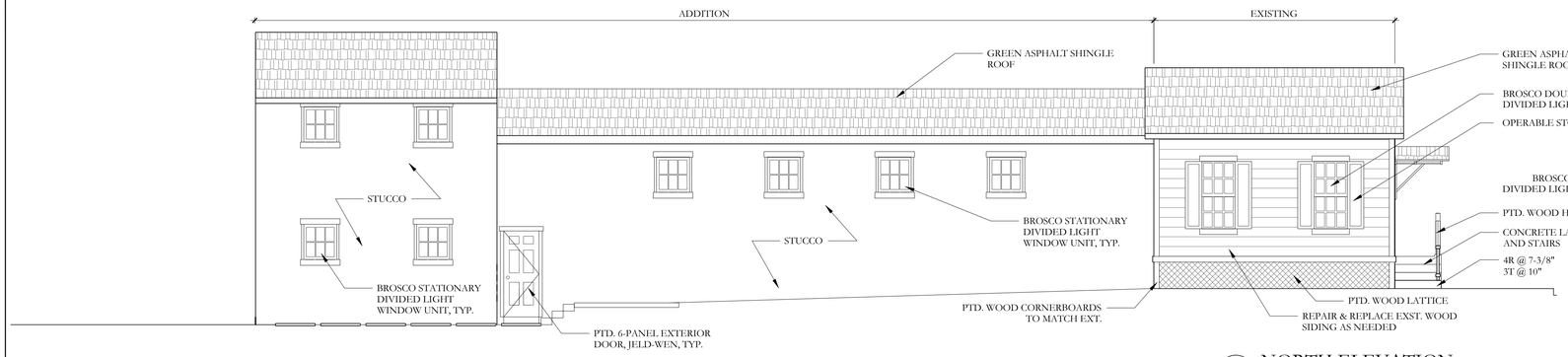

3 NORTH ELEVATION
3/16"=1'-0"

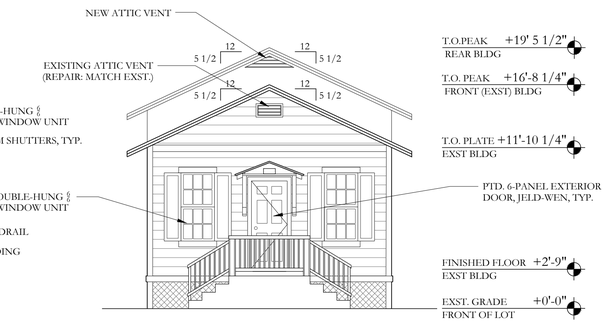

4 EAST ELEVATION
3/16"=1'-0"

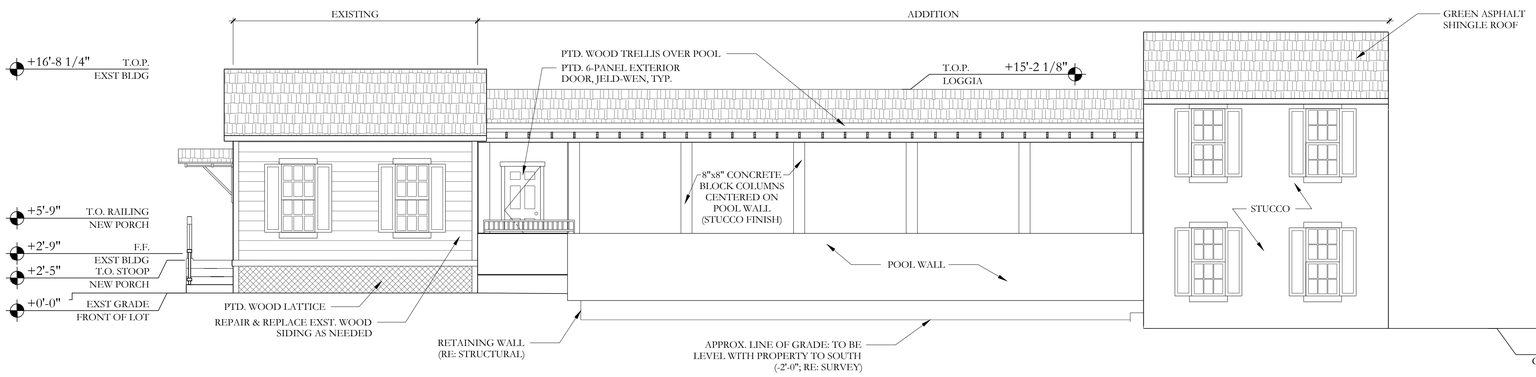

2 SOUTH ELEVATION
3/16"=1'-0"

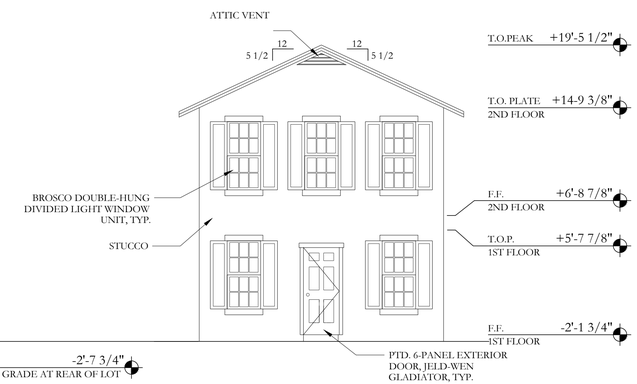

1 WEST ELEVATION
3/16"=1'-0"

ADDITION

226 SOUTH L STREET
LAKE WORTH, FLORIDA

SHEET TITLE
ELEVATIONS

DATE	SHEET NO
29 APR. 2016	A-102
SCALE 3/16"=1'-0"	
BY JLP	

FAIRFAX & SAMMONS
NEW YORK ~ PALM BEACH

FAIRFAX & SAMMONS ARCHITECTS PC
67 GANSEVOORT STREET, NEW YORK CITY 10014
TELEPHONE (212) 255-0704
FACSIMILE (212) 229-9517 ~ FAIRFAXANDSAMMONS.COM

DRAWINGS, SPECIFICATIONS AND OTHER DOCUMENTS PREPARED BY THE ARCHITECT ARE THE INSTRUMENTS OF THE ARCHITECT'S SERVICE AND SHALL REMAIN THE PROPERTY OF THE ARCHITECT, WHETHER OR NOT THE PROJECT FOR WHICH THEY ARE INTENDED IS CONSTRUCTED OR NOT. THE ARCHITECT'S DRAWINGS, SPECIFICATIONS AND OTHER DOCUMENTS WILL NOT BE USED ON ANY OTHER PROJECTS FOR ADDITIONS TO THIS PROJECT AND/OR FOR COMPLETION OF THIS PROJECT BY OTHERS, EXCEPT BY AGREEMENT IN WRITING AND WITH APPROPRIATE COMPENSATION TO THE ARCHITECT.

© 2014 FAIRFAX & SAMMONS ARCHITECTS PC

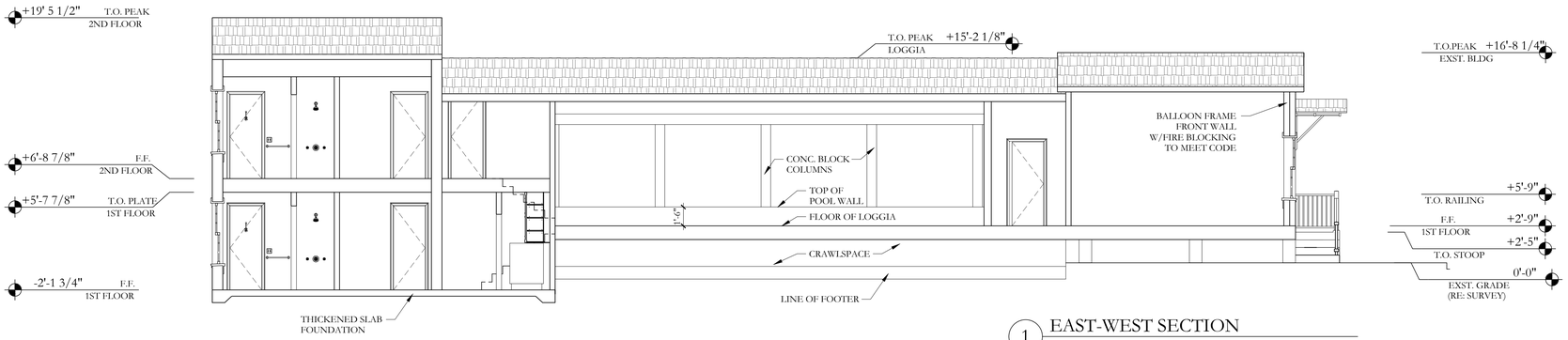

1 EAST-WEST SECTION

3/16"= 1'-0"

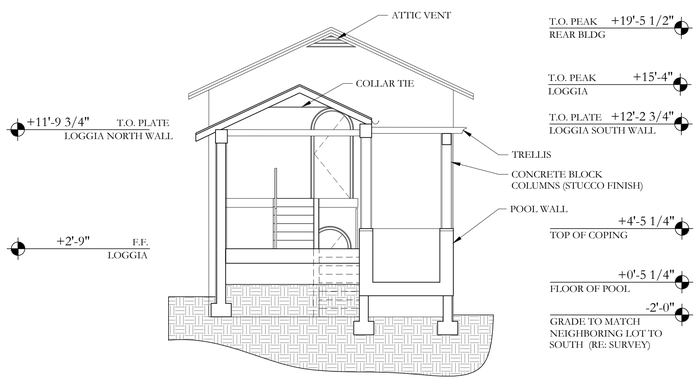

2 NORTH-SOUTH SECTION

3/16"= 1'-0"

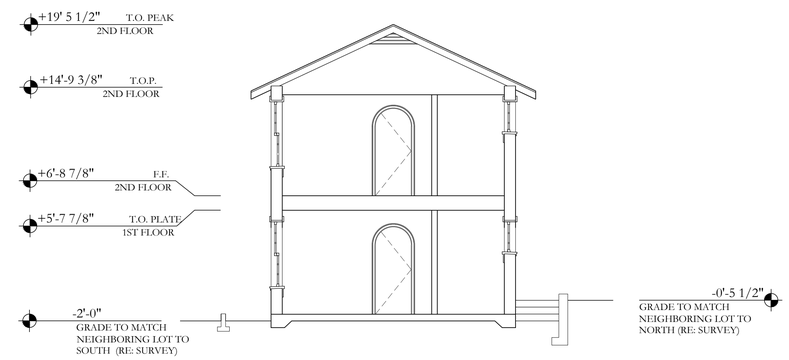

3 NORTH-SOUTH SECTION

3/16"= 1'-0"

ADDITION

226 SOUTH L STREET
LAKE WORTH, FLORIDA

SHEET TITLE

SECTIONS

DATE	SHEET NO
29 APR. 2016	A-301
SCALE 3/16"=1'-0"	
BY JLP	

FAIRFAX & SAMMONS
NEW YORK – PALM BEACH

FAIRFAX & SAMMONS ARCHITECTS PC
67 GANSEVOORT STREET, NEW YORK CITY 10014
TELEPHONE (212) 229-0704
FACSIMILE (212) 229-9517 – FAIRFAXANDSAMMONS.COM

DRAWINGS, SPECIFICATIONS AND OTHER DOCUMENTS PREPARED BY THE ARCHITECT ARE THE INSTRUMENTS OF THE ARCHITECT'S SERVICE AND SHALL REMAIN THE PROPERTY OF THE ARCHITECT, WHETHER OR NOT THE PROJECT FOR WHICH THEY ARE INTENDED IS CONSTRUCTED OR NOT. THE ARCHITECT'S DRAWINGS, SPECIFICATIONS AND OTHER DOCUMENTS WILL NOT BE USED ON ANY OTHER PROJECTS FOR ADDITIONS TO THIS PROJECT AND/OR FOR COMPLETION OF THIS PROJECT BY OTHERS, EXCEPT BY AGREEMENT IN WRITING AND WITH APPROPRIATE COMPENSATION TO THE ARCHITECT.

© 2014 FAIRFAX & SAMMONS ARCHITECTS PC

BROSCO Window Units

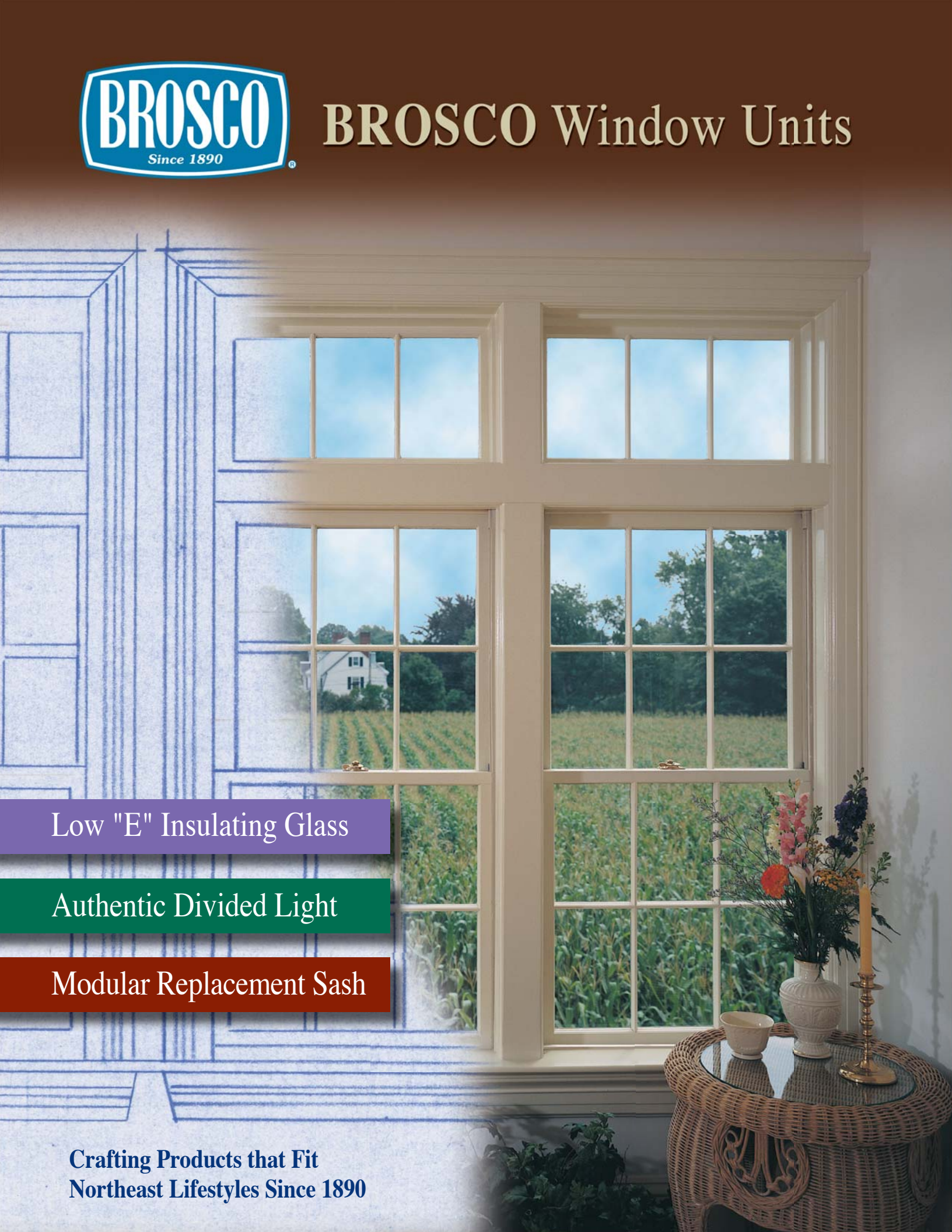

Low "E" Insulating Glass

Authentic Divided Light

Modular Replacement Sash

Crafting Products that Fit Northeast Lifestyles Since 1890

Turn Your Dreams into Reality with BROSCO Window Units.

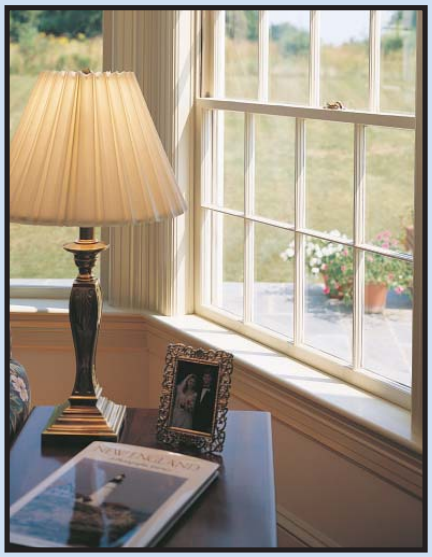

Windows that Fit Northeast Lifestyles.

The Northeast's unique architectural styles and harsh climate demand windows that are quality built, energy efficient and fit the charm and character of the traditional home. From colonials and capes to a traditional saltbox home design, BROSCO Window Units offer classic styling that will satisfy the most discriminating tastes.

Preferred by Architects and Builders.

Whether it's new construction or a renovation project, BROSCO Window Units are preferred by architects and builders for maximum design flexibility and proven performance. From architecturally correct, putty glazed Authentic Divided Light windows that replicate historic building aesthetics to Low "E" Insulating Glass units with matching transoms, BROSCO has what you need. And BROSCO Window Units feature primed composite exterior frames that can be finished to create endless color combinations. Available as traditional wood sash or new composite sash which increases durability while reducing future maintenance.

BROSCO
Since 1890®

Building Our Futures Together

Create Dramatic Living Spaces with BROSCO Window Units.

BROSCO Window Units are designed to fit the needs of any new construction or renovation project. Choose our energy efficient Low "E" Insulating Glass to reduce winter heat loss and summer heat gain. These units are available as standard 1/1 lights with optional interior wood grilles, contoured Grilles Between the Glass, or as Simulated Divided Lights featuring interior and exterior 7/8" wide bars with a spacer bar between the glass panes. Low "E" Insulating Glass is available in our treated and primed exterior (clear pine interior) wood sash, and also in a durable low-maintenance totally primed composite sash.

When traditional design elements are more the concern than energy efficiencies, BROSCO offers authentic single pane glass, putty-glazed windows. Original New England design narrow muntin bars and hand puttied glass panes in a variety of configurations are the hallmarks of these traditionally styled SSB windows. When energy concerns factor into the specification, the performance is enhanced with the addition of a Low-E panel to the sash.

Windows with a Written Warranty

We back every BROSCO Window with our exclusive BROSCO Window Written Warranty. This limited warranty includes ten years coverage against manufacturing defects on all glass and one year protection on all other window component parts. A complete copy of the BROSCO Window Warranty is available from your local retailer.

BROSCO Double-Hung Window Units

- 1/1 LIGHT
- COTTAGE STYLE
- STATIONARY PICTURE WINDOWS
- 1 LIGHT TRANSOMS

Windows shown with optional interior wood grilles, grille between the glass or simulated divided light patterns.

Window Specifications

FRAME – Standard Jamb Depth of 4-9/16" features Laminated-Veneered-Lumber sides and clear pine head jamb. All exposed exterior frame parts are manufactured from highly durable, low-maintenance Composite Materials; including the Blind Stop, Sill and standard Brickmould Casing. The clear pine inside sill stop is dadoed to receive a stool cap or "picture-framed" casing. A weatherstripped head parting stop is color matched to the vinyl jamb liner* with integral Tilt 'n Clean, Block & Tackle balances.

SILL – Composite two piece Sill & Sill Connector system provides a continuous sill nose across Combined Windows as well as allowing for the addition of the optional Historic Sill Nosing.

SASH – All sash are 1-3/8" thick and feature a 3/4" Low-E Insulating Glass with Argon gas for increased performance. Sash are weatherstripped at top, bottom and the interlocking check rails. Treated Wood Sash with clear pine interiors and primed exteriors, as well as durable low maintenance Composite Sash are standard offerings. Design requirements are addressed with the offering of interior wood grilles, contoured Grilles Between the Glass or Simulated Divided Lights with internal spacer bars. Windows are secured by a stylish white or brass cam sash lock.

*Specify White or Beige

1/1 LIGHT

Rough Opening			1'-10"	2'-0"	2'-2"	2'-3"	2'-6"	2'-9"	2'-10"	3'-0"	3'-2"	3'-6"
	≠ Sash Opening		1'-7 5/8"	1'-9 5/8"	1'-11 5/8"	2'-0 5/8"	2'-3 5/8"	2'-6 5/8"	2'-7 5/8"	2'-9 5/8"	2'-11 5/8"	3'-3 5/8"
		★Glass Size	16"	18"	20"	21"	24"	27"	28"	30"	32"	36"
2'-9"	2'-5"	12"	16" x 12"	18" x 12"	20" x 12"	21" x 12"	24" x 12"	27" x 12"	28" x 12"	30" x 12"	32" x 12"	36" x 12"
3'-1"	2'-9"	14"	16" x 14"	18" x 14"	20" x 14"	21" x 14"	24" x 14"	27" x 14"	28" x 14"	30" x 14"	32" x 14"	36" x 14"
3'-5"	3'-1"	16"	16" x 16"	18" x 16"	20" x 16"	21" x 16"	24" x 16"	27" x 16"	28" x 16"	30" x 16"	32" x 16"	36" x 16"
3'-9"	3'-5"	18"	16" x 18"	18" x 18"	20" x 18"	21" x 18"	24" x 18"	27" x 18"	28" x 18"	30" x 18"	32" x 18"	36" x 18"
4'-1"	3'-9"	20"	16" x 20"	18" x 20"	20" x 20"	21" x 20"	24" x 20"	27" x 20"	28" x 20"	30" x 20"	32" x 20"	36" x 20"
4'-5"	4'-1"	22"	16" x 22"	18" x 22"	20" x 22"	21" x 22"	24" x 22"	27" x 22"	28" x 22"	30" x 22"	32" x 22"	36" x 22"
4'-9"	4'-5"	24"	16" x 24"	18" x 24"	20" x 24"	21" x 24"	24" x 24"	27" x 24"	28" x 24"	30" x 24"	32" x 24"	36" x 24"
5'-1"	4'-9"	26"	16" x 26"	18" x 26"	20" x 26"	21" x 26"	24" x 26"	27" x 26"	28" x 26"	30" x 26"	32" x 26"	36" x 26"
5'-3"	4'-11"	27"	16" x 27"	18" x 27"	20" x 27"	21" x 27"	24" x 27"	27" x 27"	28" x 27"	30" x 27"	32" x 27"	36" x 27"
5'-5"	5'-1"	28"	16" x 28"	18" x 28"	20" x 28"	21" x 28"	24" x 28"	27" x 28"	28" x 28"	30" x 28"	32" x 28"	36" x 28"
5'-9"	5'-5"	30"	16" x 30"	18" x 30"	20" x 30"	21" x 30"	24" x 30"	27" x 30"	28" x 30"	30" x 30"	32" x 30"	36" x 30"
6'-1"	5'-9"	32"	16" x 32"	18" x 32"	20" x 32"	21" x 32"	24" x 32"	27" x 32"	28" x 32"	30" x 32"	32" x 32"	36" x 32"

COTTAGE STYLE (Unevenly Divided)

Rough Opening			2'-3"	2'-3"	2'-6"	2'-6"	2'-6"	2'-10"
	≠ Sash Opening		2'-0 5/8"	2'-0 5/8"	2'-3 5/8"	2'-3 5/8"	2'-3 5/8"	2'-7 5/8"
		★Glass Size	21"	21"	24"	24"	24"	28"
		Light Size ➤	7" x 8"	7" x 8"	6" x 8"	8" x 10"	8" x 10"	7" x 9"
			6/9 Light	9/6 Light	8/12 Light	6/9 Light	9/6 Light	8/12 Light
4'-1"	3'-9"	16"/24"	—	—	24" x 16"/24"	—	—	—
4'-6"	4'-2"	18"/27", 27"/18"	21" x 18"/27"	21" x 27"/18"	—	—	—	28" x 18"/27"
4'-11"	4'-7"	20"/30", 30"/20"	—	—	—	24" x 20"/30"	24" x 30"/20"	—

STATIONARY PICTURE WINDOWS

Rough Opening			3'-6"	3'-10 3/8"	4'-6 3/8"	5'-2 3/8"	5'-10 3/8"
	≠ Sash Opening		3'-3 5/8"	3'-8"	4'-4"	5'-0"	5'-8"
		★Glass Size	36"	40 3/8"	48 3/8"	56 3/8"	64 3/8"
			16 Light	16 Light	20 Light	24 Light	32 Light
3'-5"	3'-1"	32 3/4"	3'-3 5/8" x 3'-1"	3'-8" x 3'-1"	4'-4" x 3'-1"	5'-0" x 3'-1"	5'-8" x 3'-1"
4'-1"	3'-9"	40 3/4"	3'-3 5/8" x 3'-9"	3'-8" x 3'-9"	4'-4" x 3'-9"	5'-0" x 3'-9"	5'-8" x 3'-9"
4'-5"	4'-1"	44 3/4"	3'-3 5/8" x 4'-1"	3'-8" x 4'-1"	4'-4" x 4'-1"	5'-0" x 4'-1"	5'-8" x 4'-1"
4'-9"	4'-5"	48 3/4"	3'-3 5/8" x 4'-5"	3'-8" x 4'-5"	4'-4" x 4'-5"	5'-0" x 4'-5"	5'-8" x 4'-5"
5'-1"	4'-9"	52 3/4"	3'-3 5/8" x 4'-9"	3'-8" x 4'-9"	4'-4" x 4'-9"	5'-0" x 4'-9"	5'-8" x 4'-9"

Windows shown with optional Wood Grille, GBG or SDL patterns.

★ Glass sizes are approximate.

≠ Actual sash size = sash opening width minus 1 9/16", height 3/16".

Contact your BROSCO dealer for custom sizes.

COMBINED WINDOWS

Mullions ~ Triples ~ Quads ~ Quints

Whether joining like size units or assembling a Picture Window with Flankers, BROSCO assembles units in multiple configurations based on your design requirements. Units can be joined in a jamb to jamb assembly, or spaced to allow for a stud pocket. In either case, the composite sill nosing is the unifying frame member that ties the unit together giving the finished appearance of one single large combined unit.

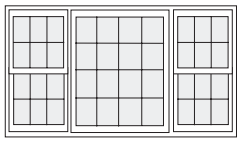

Rough Opening	Unit Dimension	Brickmould Casing	Flat Casing (3¾")	Cape Cod Casing
glass + **9"**	glass + **8⅞"**	glass + **9⅝"**	glass + **11⅜"**	glass + **12⅛"**

Single Opening	Mullion		Triple	
	Narrow	w/Single Stud Pocket	Narrow	w/Single Stud Pocket
glass + **6"**	2 x glass + **10⅞"**	2 x glass + **12⅞"**	3 x glass + **15¾"**	3 x glass + **19¾"**
glass + **4⅞"**	2 x glass + **9¾"**	2 x glass + **11¾"**	3 x glass + **14⅝"**	3 x glass + **18⅝"**
glass + **7⅝"**	2 x glass + **12½"**	2 x glass + **14½"**	3 x glass + **17⅜"**	3 x glass + **21⅜"**
glass + **11"**	2 x glass + **15⅞"**	2 x glass + **17⅞"**	3 x glass + **20¾"**	3 x glass + **24¾"**
glass + **12¾"**	2 x glass + **17⅝"**	2 x glass + **19⅝"**	3 x glass + **22½"**	3 x glass + **26½"**

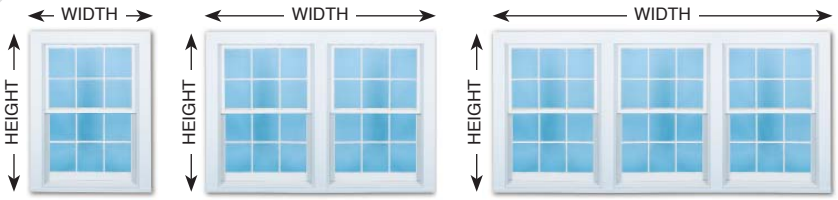

SINGLE FIXED UNITS

Any size lower sash can be installed in a stationary frame, with all of the features of a standard Picture Window, with sill and casing details to match, in essence, creating a "mini-picture window" to fill your design needs.

For Rough Openings & Unit Dimensions, refer to page 11.

1 LIGHT RECTANGULAR TRANSOMS

Transom Rough Opening	2'-2"	2'-6"	2'-9"	2'-10"	3'-0"
★Glass Size	20"	24"	27"	28"	30"
Varies †	20" x 20"	24" x 20"	27" x 20"	28" x 20"	30" x 20"

To Calculate Rough Opening

To arrive at **HEIGHT** of opening add 9" to overall glass height.
To arrive at **WIDTH** of opening, figure as follows (overall glass plus):

Single	6"
Mullion - Narrow	2 x glass + 10-7/8"
Mullion - w/Single Stud Pocket	2 x glass + 12-7/8"
Triple - Narrow	3 x glass + 15-3/4"
Triple - w/Single Stud Pocket	3 x glass + 19-3/4"

† Combined Transom/Double-Hung rough opening height formula: Transom glass height **plus** Double-Hung glass height **plus** 13¼"

Windows shown with optional Wood Grille, GBG or SDL patterns.

★ Glass sizes are approximate.

Contact your BROSCO dealer for custom sizes.

Double-Hung Window Units

- 2/1 LIGHT
- 2/2 LIGHT HORIZONTAL
- 2/2 LIGHT VERTICAL
- 3/3 LIGHT
- 4/4 LIGHT
- 6/1 LIGHT
- 6/6 LIGHT
- 8/8 LIGHT
- 9/9 LIGHT
- 12/12 LIGHT
- COTTAGE STYLE

Window Specifications

FRAME – Standard Jamb Depth of 4-9/16" features Laminated-Veneered-Lumber sides and clear pine head jamb. All exposed exterior frame parts are manufactured from highly durable, low-maintenance Composite Materials; including the Blind Stop, Sill and standard Brickmould Casing. The clear pine inside sill stop is dadoed to receive a stool cap or "picture-framed" casing. A weatherstripped head parting stop is color matched to the vinyl jamb liner* with integral Tilt 'n Clean, Block & Tackle balances.

SILL – Composite two piece Sill & Sill Connector system provides a continuous sill nose across Combined Windows as well as allowing for the addition of the optional Historic Sill Nosing.

SASH – All sash are 1-3/8" thick glazed with single pane glass, hand puttied into a primed exterior, clear pine interior treated wood sash. All divided light sash feature a traditional narrow muntin bar measuring 5/8" wide. Enhanced thermal performance is achieved with the addition of a Low-E Energy panel available for all layouts except 1/1.

*Specify White or Beige

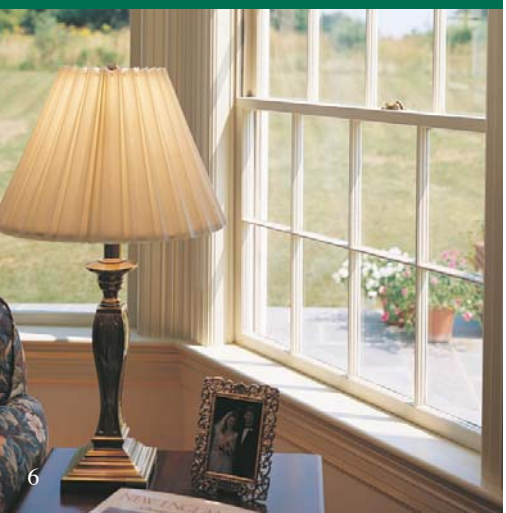

Traditional Putty Glazed Single Pane Glass

6/6 LIGHT

Rough Opening			2'-0"	2'-3"	2'-6"	2'-9"	3'-0"	3'-6"
	≠ Sash Opening		1'-9 5/8"	2'-0 5/8"	2'-3 5/8"	2'-6 5/8"	2'-9 5/8"	3'-3 5/8"
		★Glass Size	6"	7"	8"	9"	10"	12"
3'-1"	2'-9"	7"	—	—	8" x 7"	9" x 7"	—	—
3'-5"	3'-1"	8"	6" x 8"	—	8" x 8"	9" x 8"	10" x 8"	—
3'-9"	3'-5"	9"	—	7" x 9"	8" x 9"	9" x 9"	10" x 9"	—
4'-1"	3'-9"	10"	—	—	8" x 10"	9" x 10"	10" x 10"	—
4'-5"	4'-1"	11"	—	—	8" x 11"	9" x 11"	10" x 11"	—
4'-9"	4'-5"	12"	—	—	8" x 12"	9" x 12"	10" x 12"	—
5'-1"	4'-9"	13"	—	—	8" x 13"	9" x 13"	10" x 13"	—
5'-5"	5'-1"	14"	—	—	—	9" x 14"	10" x 14"	—
5'-9"	5'-5"	15"	—	—	—	9" x 15"	10" x 15"	12" x 15"
6'-1"	5'-9"	16"	—	—	—	—	10" x 16"	—

2/2 LIGHT VERTICAL

Rough Opening			2'-3"	2'-6"	2'-9"	2'-10"	3'-0"	3'-2"
	≠ Sash Opening		2'-0 5/8"	2'-3 5/8"	2'-6 5/8"	2'-7 5/8"	2'-9 5/8"	2'-11 5/8"
		★Glass Size	10 1/2"	12"	13 1/2"	14"	15"	16"
3'-9"	3'-5"	18"	10 1/2" x 18"	—	—	—	—	—
4'-1"	3'-9"	20"	—	12" x 20"	13 1/2" x 20"	—	—	—
4'-5"	4'-1"	22"	—	—	13 1/2" x 22"	—	—	—
4'-6"	4'-2"	22 1/2"	10 1/2" x 22 1/2"	—	—	—	—	—
4'-9"	4'-5"	24"	—	12" x 24"	13 1/2" x 24"	14" x 24"	15" x 24"	—
4'-11"	4'-7"	25"	—	12" x 25"	—	—	—	—
5'-1"	4'-9"	26"	—	—	13 1/2" x 26"	14" x 26"	15" x 26"	—
5'-5"	5'-1"	28"	—	—	13 1/2" x 28"	14" x 28"	15" x 28"	—
5'-9"	5'-5"	30"	—	—	13 1/2" x 30"	14" x 30"	15" x 30"	16" x 30"
6'-1"	5'-9"	32"	—	—	—	—	15" x 32"	16" x 32"

3/3 LIGHT

Rough Opening			2'-9"
	≠ Sash Opening		2'-6 5/8"
		★Glass Size	9"
2'-9"	2'-5"	12"	9" x 12"

SINGLE THICK GLASS ONLY

1/1 LIGHT

Rough Opening			1'-10"	2'-6"	2'-9"
	≠ Sash Opening		1'-7 5/8"	2'-3 5/8"	2'-6 5/8"
		★Glass Size	16"	24"	27"
3'-5"	3'-1"	16"	16" x 16"	24" x 16"	—
4'-1"	3'-9"	20"	—	24" x 20"	—
4'-9"	4'-5"	24"	—	24" x 24"	27" x 24"

Windows shown with optional Wood Grille.

★ Glass sizes are approximate.

≠ Actual sash size = sash opening width minus 1 9/16", height 3/16".

Contact your BROSCO dealer for custom sizes.

2/1 LIGHT

Rough Opening			2'-6"	2'-9"	2'-10"	3'-0"
≠ Sash Opening			2'-3 5/8"	2'-6 5/8"	2'-7 5/8"	2'-9 5/8"
		★Glass Size	24"	27"	28"	30"
4'-9"	4'-5"	24"	24" x 24"	27" x 24"	—	—
5'-1"	4'-9"	26"	—	27" x 26"	—	—
5'-5"	5'-1"	28"	—	27" x 28"	28" x 28"	30" x 28"
5'-9"	5'-5"	30"	—	—	—	30" x 30"

2/2 LIGHT HORIZONTAL

Rough Opening			2'-6"	2'-9"
≠ Sash Opening			2'-3 5/8"	2'-6 5/8"
		★Glass Size	24"	27"
3'-5"	3'-1"	8"	24" x 8"	27" x 8"
4'-1"	3'-9"	10"	24" x 10"	27" x 10"

4/4 LIGHT

Rough Opening			1'-10"
≠ Sash Opening			1'-7 5/8"
		★Glass Size	8"
3'-5"	3'-1"	8"	8" x 8"
4'-1"	3'-9"	10"	8" x 10"
4'-5"	4'-1"	11"	8" x 11"
4'-9"	4'-5"	12"	8" x 12"

6/1 LIGHT

Rough Opening			2'-9"
≠ Sash Opening			2'-6 5/8"
		★Glass Size	27"
4'-1"	3'-9"	20"	27" x 20"
4'-5"	4'-1"	22"	27" x 22"
4'-9"	4'-5"	24"	27" x 24"
5'-1"	4'-9"	26"	27" x 26"
5'-5"	5'-1	28"	27" x 28"

8/8 LIGHT

Rough Opening			2'-6"	2'-10"	3'-2"	3'-6"
≠ Sash Opening			2'-3 5/8"	2'-7 5/8"	2'-11 5/8"	3'-3 5/8"
		★Glass Size	6"	7"	8"	9"
3'-5"	3'-1"	8"	6" x 8"	—	8" x 8"	—
3'-9"	3'-5"	9"	—	7" x 9"	—	—
4'-1"	3'-9"	10"	—	—	8" x 10"	—
4'-5"	4'-1"	11"	—	—	8" x 11"	9" x 11"
4'-9"	4'-5"	12"	—	—	8" x 12"	9" x 12"

9/9 LIGHT

Rough Opening			2'-3"
≠ Sash Opening			2'-0 5/8"
		★Glass Size	7"
5'-3"	4'-11"	9"	7" x 9"

12/12 LIGHT

Rough Opening			2'-6"	2'-10"	3'-2"
≠ Sash Opening			2'-3 5/8"	2'-7 5/8"	2'-11 5/8"
		★Glass Size	6"	7"	8"
4'-9"	4'-5"	8"	6" x 8"	—	—
5'-3"	4'-11"	9"	—	7" x 9"	—
5'-9"	5'-5"	10"	—		8" x 10"

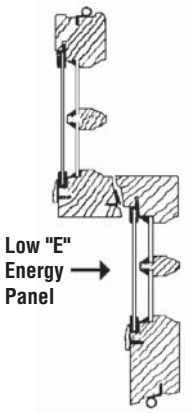

Low "E" Energy Panel Tilt 'n Clean Unit –
BROSCO's Low "E" Energy Panel is available on most single thick glass (SSB) units to provide better energy efficiency.

COTTAGE STYLE (Unevenly Divided)

Rough Opening			2'-3"	2'-3"	2'-6"	2'-6"	2'-6"	2'-10"	2'-10"
≠ Sash Opening			2'-0 5/8"	2'-0 5/8"	2'-3 5/8"	2'-3 5/8"	2'-3 5/8"	2'-7 5/8"	2'-7 5/8"
		★Glass Size	7"	7"	8"	8"	6"	7"	7"
			6/9 Light	9/6 Light	6/9 Light	9/6 Light	8/12 Light	8/12 Light	12/8 Light
4'-1"	3'-9"	8"	—	—	—	—	6" x 8"	—	—
4'-6"	4'-2"	9"	7" x 9"	7" x 9"	—	—	—	7" x 9"	7" x 9"
4'-11"	4'-7"	10"	—	—	8" x 10"	8" x 10"	—	—	—

★ Glass sizes are approximate.

≠ Actual sash size = sash opening width minus 1 9/16", height 3/16".

Contact your BROSCO dealer for custom sizes.

Double-Hung Window Units

- STATIONARY PICTURE WINDOWS
- 3 LIGHT TRANSOM
- 4 LIGHT TRANSOM
- 6 LIGHT TRANSOM

Window Specifications

FRAME – Standard Jamb Depth of 4-9/16" features Laminated-Veneered-Lumber sides and clear pine head jamb. All exposed exterior frame parts are manufactured from highly durable, low-maintenance Composite Materials; including the Blind Stop, Sill and standard Brickmould Casing. The clear pine inside sill stop is dadoed to receive a stool cap or "picture-framed" casing. A weatherstripped head parting stop is color matched to the vinyl jamb liner* with integral Tilt 'n Clean, Block & Tackle balances.

SILL – Composite two piece Sill & Sill Connector system provides a continuous sill nose across Combined Windows as well as allowing for the addition of the optional Historic Sill Nosing.

SASH – All sash are 1-3/8" thick glazed with single pane glass, hand puttied into a primed exterior, clear pine interior treated wood sash. All divided light sash feature a traditional narrow muntin bar measuring 5/8" wide. Enhanced thermal performance is achieved with the addition of a Low-E Energy panel available for all layouts except 1/1.

*Specify White or Beige

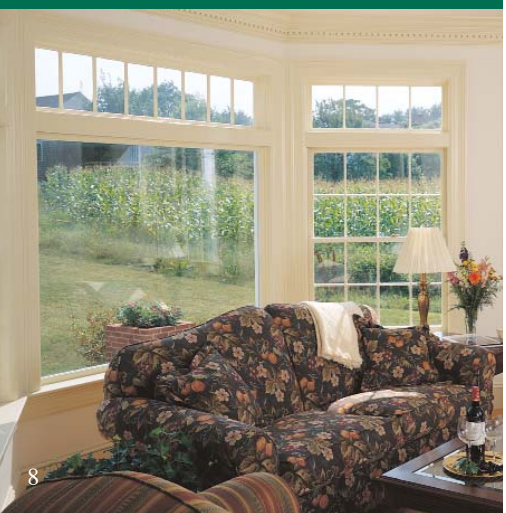

Traditional Putty Glazed Single Pane Glass

STATIONARY PICTURE WINDOWS

Rough Opening				3'-6"	3'-10 3/8"	4'-6 3/8"	5'-2 3/8"	5'-10 3/8"
Sash Opening				3'-3 5/8"	3'-8"	4'-4"	5'-0"	5'-8"
		★Glass Size		36"	40 3/8"	48 3/8"	56 3/8"	63 3/8"
		Light Size		9"	10"	9 5/8"	9 3/8"	8"
				16 Light	16 Light	20 Light	24 Light	32 Light
3'-5"	3'-1"	32 3/4"	8"	—	3'-8" x 3'-1"	4'-4" x 3'-1"	—	—
4'-1"	3'-9"	40 3/4"	10"	—	3'-8" x 3'-9"	4'-4" x 3'-9"	5'-0" x 3'-9"	5'-8" x 3'-9"
4'-5"	4'-1"	44 3/4"	11"	3'-3 5/8" x 4'-1"	3'-8" x 4'-1"	4'-4" x 4'-1"	5'-0" x 4'-1"	5'-8" x 4'-1"
4'-9"	4'-5"	48 3/4"	12"	3'-3 5/8" x 4'-5"	3'-8" x 4'-5"	4'-4" x 4'-5"	5'-0" x 4'-5"	5'-8" x 4'-5"
6'-1"	4'-9"	52 3/4"	13"	—	3'-8" x 4'-9"	4'-4" x 4'-9"	5'-0" x 4'-9"	5'-8" x 4'-9"

Low "E" Panel not available on Picture Units.

3 LIGHT TRANSOM

TRANSOM Rough Opening		2'-0"	2'-3"	2'-6"	2'-9"	3'-0"
	★Glass Size	6"	7"	8"	9"	10"
Varies †	8"	6" x 8"	—	—	—	—
	9"	—	7" x 9"	—	—	—
	10"	—	—	8" x 10"	9" x 10"	10" x 10"

4 LIGHT TRANSOM

TRANSOM Rough Opening		2'-6"	2'-10"	3'-2"	3'-6"
	★Glass Size	6"	7"	8"	9"
Varies †	8"	6" x 8"	—	—	—
	9"	—	7" x 9"	—	—
	10"	—	—	8" x 10"	—
	12"	—	—	—	9" x 12"

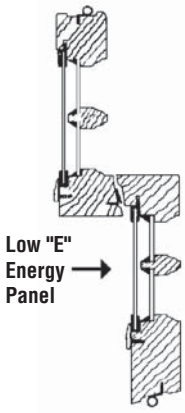

Low "E" Energy Panel Tilt 'n Clean Unit –
BROSCO's Low "E" Energy Panel is available on most single thick glass (SSB) units to provide better energy efficiency.

6 LIGHT TRANSOM

TRANSOM Rough Opening		2'-3"	2'-6"	2'-9"	3'-0"
	★Glass Size	7"	8"	9"	10"
Varies †	9"	7" x 9"	8" x 9"	9" x 9"	10" x 9"

Glass sizes noted under each illustration indicates Double-Hung size to be used with corresponding Transom.

Stationary Windows can be used as a "stand alone" unit. For Rough Openings & Unit Dimensions, refer to page 11.

† Combined Transom/Double-Hung rough opening height formula:
Overall transom glass height plus overall Double-Hung glass height plus 13 1/4".

★ Glass sizes are approximate.

≠ Actual sash size = sash opening width minus 1 9/16", height 3/16".

Contact your BROSCO dealer for custom sizes.

Modular Sized Replacement Sash

1/1 LIGHT

Sash Opening		1'-8"	2'-0"	2'-4"	2'-6"	2'-8"	3'-0"	3'-4"
	★Glass Size	16"	20"	24"	26"	28"	32"	36"
2'-10"	14"	—	2'-0" x 2'-10"	2'-4" x 2'-10"	—	2'-8" x 2'-10"	—	—
3'-2"	16"	—	2'-0" x 3'-2"	2'-4" x 3'-2"	2'-6" x 3'-2"	2'-8" x 3'-2"	3'-0" x 3'-2"	—
3'-10"	20"	1'-8" x 3'-10"	2'-0" x 3'-10"	2'-4" x 3'-10"	2'-6" x 3'-10"	2'-8" x 3'-10"	3'-0" x 3'-10"	—
4'-2"	22"	1'-8" x 4'-2"	2'-0" x 4'-2"	2'-4" x 4'-2"	2'-6" x 4'-2"	2'-8" x 4'-2"	3'-0" x 4'-2"	3'-4" x 4'-2"
4'-6"	24"	1'-8" x 4'-6"	2'-0" x 4'-6"	2'-4" x 4'-6"	2'-6" x 4'-6"	2'-8" x 4'-6"	3'-0" x 4'-6"	3'-4" x 4'-6"
4'-10"	26"	—	—	2'-4" x 4'-10"	2'-6" x 4'-10"	2'-8" x 4'-10"	—	—
5'-2"	28"	—	—	—	—	2'-8" x 5'-2"	3'-0" x 5'-2"	—

PICTURE WINDOWS

Sash Opening		3'-4"	4'-0"	4'-4"	5'-0"	5'-8"
	Glass Size	36 3/8"	44 3/8"	48 3/8"	56 3/8"	64 3/8"
3'-10"	41 3/4"	3'-4" x 3'-10"	—	4'-4" x 3'-10"	—	—
4'-2"	45 3/4"	3'-4" x 4'-2"	4'-0" x 4'-2"	4'-4" x 4'-2"	5'-0" x 4'-2"	5'-8" x 4'-2"
4'-6"	49 3/4"	3'-4" x 4'-6"	4'-0" x 4'-6"	4'-4" x 4'-6"	5'-0" x 4'-6"	5'-8" x 4'-6"

★ Glass sizes are approximate.

Contact your BROSCO dealer for custom sizes.

LOW "E" INSULATING GLASS

Double-Hung Window Modular Sash

- **1/1 LIGHT**
- **PICTURE WINDOWS**

BROSCO "Modular Sash" with Low-E Insulating Glass and Argon Gas are ideal for replacing old, worn, inefficient Modular Sized single pane glass sash. Durable, mortise and tenon construction is the standard for these preservative treated, primed exterior, 1-3/8" thick wood sash. These sash have a square edge plough and are pre-fit to pair with our Tilt 'n Clean, Block and Tackle Balances for replacement applications.

Picture Sash are also available in "Modular" sizes, featuring the same high quality 3/4" thick, Argon Filled Insulating Glass with Low-E coating as the BROSCO Modular Double-Hung sash.

BROSCO windows available with safety glazing options as needed.

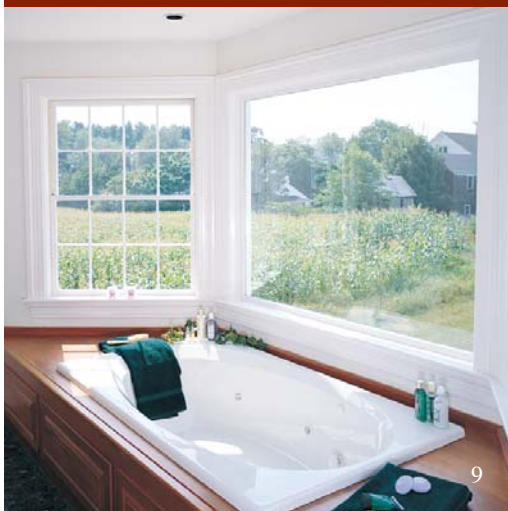

OPTIONS

DOUBLE-HUNG REPLACEMENT SASH KITS

BROSCO's Replacement Sash Kits are ideal for double hung windows with worn out sash that do not operate smoothly, will not seal tight, have been painted shut, or are simply old and worn out. As long as the frame is solid and in good condition, the sash can be replaced without disturbing the frame or the original trim. Our Replacement Sash Kit includes a set of Low-E Insulated Glass sash with tilt hardware applied, Block and Tackle balances and a weatherstripped head parting stop. All the windows shown in this brochure are available in a variety of glazing options designed to meet your replacement needs.

EXTERIOR WINDOW CASINGS

Composite
Brickmould Casing
(Standard)

Composite
Flat Casing
$1^{1}/_{16}$" x $3^{3}/_{4}$"

Composite
Cape Cod Flat Casing
$^{11}/_{16}$" x $4^{1}/_{2}$"

Primed
Flat Casing
$1^{1}/_{16}$" x $5^{1}/_{4}$"

Clear Cedar Sill
and Flat Casing
$1^{1}/_{16}$" x $3^{3}/_{4}$"

LONG SILL HORNS

Up to 12" Sill Horns.

On NO CASING orders, $3^{3}/_{4}$" horns will be used unless otherwise specified.

Performance Grade Rating:
Water & Air Infiltration, Structural (DP)
up to
PG 55*

	NFRC Rating	
Low-E Argon Insulating Glass Sash	**U-Value**	**SHGC♦**
– Wood 1/1 Layout	0.29	0.30
– Wood with "SDL" Bars and Spacer	0.29	0.27
– Composite 1/1 Layout	0.29	0.29
– Composite with "SDL" Bars and Spacer	0.29	0.26
– Composite with "GBG"	0.29	0.26
Authentic Divided Light Sash	**U-Value**	**SHGC♦**
– Wood SSB Glass	–	–
– Wood SSB Glass w/Low-E Energy Panel	0.42	0.48

♦ Solar Heat Gain Coefficient.

* PG Ratings can vary by size/type window.

GRILLES BETWEEN THE GLASS

Our Grilles Between the Glass option features white, contoured aluminum grilles located between the panes of Low-E Insulating glass. The contoured grille bar creates the look of traditional detailing without sacrificing energy efficiency and offers ease of cleaning.

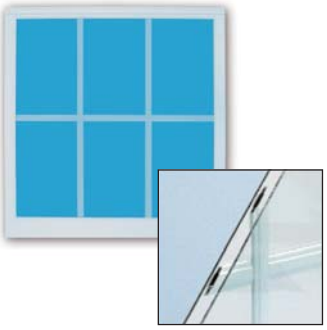

SIMULATED DIVIDED LIGHT

The Simulated Divided Light option is an authentically designed bar system applied to the interior and the exterior of the glass which creates the look of a traditional true divided light window while maintaining the energy performance of our Low-E Insulating glass. An internal spacer between the glass panels further simulates the look of true divided lights.

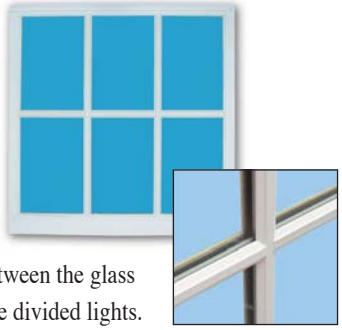

LOW-E ENERGY PANEL

Low-E stands for low emissivity. It is a coating applied to the glass to reduce ultraviolet transmission and the transmission of radiated heat. Low-E Energy Panel can be used with Authentic Divided Light Windows to achieve maximum energy efficiency.

WOOD GRILLES

EXTENSION JAMBS

$6^{9}/_{16}$" wall (applied or KD).

LARSON STORM WINDOWS

Energy efficient Storm Windows with a Limited Lifetime Warranty help to cut energy costs up to 60%.

CELLAR SASH

Primed or Clear Pine $1^{1}/_{8}$" Cellar Sash available in various light layouts.

INSECT SCREEN

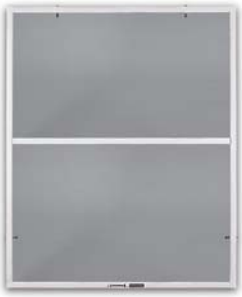

Removable, exterior mounted white aluminum full screen with PVC reinforced corners and charcoal colored fiberglass mesh.

COMPOSITE SILL NOSING CONNECTORS

Standard sill nosing connector is $1^{1}/_{4}$" thick.

Also available in cedar.

Optional "Historic" sill nosing connector is $1^{3}/_{4}$" thick.

SINGLE STATIONARY UNITS

Set-up Stationary Windows to be used as a "stand alone" unit. Use any bottom sash or Cellar Sash to create a Stationary Window that will let in natural light and complement any Double-Hung window.

Shown with Flat Casing

Shown with Brickmould Casing

Rough Openings & Unit Dimensions				
Stationary Window Unit	Double-Hung Sash		Cellar Sash	
	Width	Height	Width	Height
Rough Opening = Glass plus	6"	$6^{5}/_{16}$"	6"	$6^{3}/_{16}$"
Unit Dimension = Glass plus	$4^{7}/_{8}$"	$5^{3}/_{16}$"	$4^{7}/_{8}$"	$5^{5}/_{8}$"
Brickmould Casing = Glass plus	$7^{5}/_{8}$"	$7^{5}/_{16}$"	$7^{5}/_{8}$"	$7^{7}/_{16}$"
Flat Casing $3^{3}/_{4}$" = Glass plus	11"	$8^{7}/_{8}$"	11"	$9^{3}/_{16}$"
Flat Casing $5^{1}/_{4}$" = Glass plus	14"	$10^{3}/_{8}$"	14"	$10^{11}/_{16}$"
Flat Casing $4^{1}/_{2}$" = Glass plus	$12^{3}/_{4}$"	$9^{7}/_{16}$"	$12^{3}/_{4}$"	$9^{15}/_{16}$"

Our Commitment

Since 1890, the BROSCO name has represented our commitment to quality, value and service. We believe in providing low-maintenance, environmentally friendly, energy efficient millwork products; engineered for our rugged Northeast weather and our regional architectural preferences. We are proud to extend this tradition with every product we distribute.

Available at:

Building Our Futures Together

www.brosco.com

94410202 12/12

Enviroshake®

Quality Engineered Roofing

The Authentic Look of Cedar & Slate with Lifetime Performance

1-866-423-3302 enviroshake.com

Enviroshake® Inc. Quality Engineered Roofing and Siding Technology

Enviroshake® Inc. premium products are designed to offer the authentic look of cedar shakes, cedar shingles, and natural slate, while offering the enhanced durability, longevity, and performance that discerning property owner's desire.

The most Authentic Cedar Look.

Enviroshake® Inc.'s cedar-look products include Enviroshake®, designed to emulate 9" cedar shakes, and Enviroshingle™, designed to emulate 5" perfection cedar shingles. All Enviroshake® and Enviroshingle™ dies were made from the 3D images of real cedar, to ensure the wood grains, size and width are true to nature. The cellulosic fibers (natural wood fibers) used in the composition allow Enviroshake Inc. products to achieve the authentic textured look of cedar roofs.

Enviroshake® is pleased to offer various colour options to emulate a natural cedar roof in various stages of its life. Enviroshake® and Enviroshingle™ are available in Aged Cedar, Classic Silvered Silver, or Multi-Tone. All Enviroshake® Inc. Products will weather, and as with cedar, there may be variations in shading and thickness of the shakes/shingles giving them a natural look on the roof.

Dare to Compare.

Can you identify which is real cedar and which is Enviroshake®?

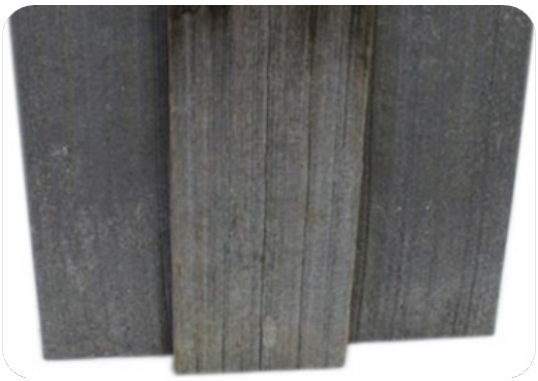

Enviroshake® is on the left and right side, the center-piece is natural cedar.

"Absolutely beautiful…and gets better looking each day."

"This product is absolutely beautiful, is weathering exactly as described, and gets better looking each day. People driving by have stopped and asked me the name of the material…." – Kathy Heller

Unsurpassed Durability with a Lifetime Warranty.

Enviroshake® Inc. products were designed and tested to be one of the most durable roofing products in the market. They have been tested to -40 and +40 degrees Celsius as required by the National Building Code of Canada Authorization CCMC 13501-R. The material does not absorb moisture in excess of 3% and therefore is not susceptible to freeze/thaw problems associated with cedar. They are also resistant to moss, mold, mildew, and insects. All Enviroshake® Inc. products have a Class A System fire rating (See Install Guide). Cedar roofs may be damaged by walking on them, which may be required to repair the damage from falling branches or conduct maintenance on the chimney or other features external to the roof covering. Enviroshake® Inc. products tolerate being walked on with no damage.

All Enviroshake® Inc. products are fully backed with a transferable lifetime warranty. Enviroshake® Inc. products have been installed on over 5000 residential, commercial, historical, resort, and religious properties for over 16 years with 100% customer satisfaction.

The Benefits of Enviroshake® vs. Cedar

Enviroshake®

- Maintenance and worry free
- Withstands winds up to 180 MPH 290 km/h)
- Lifetime warranty that is transferable within the first 50 years
- Truly Replicates the look cedar
- Will not rot, blister, peel, or crack
- Mold, mildew, and insect resistant
- Fire resistant- Class A system (see Install Guide)
- Hail Resistant and wind resistant- Level 4 impact certification (UL 2218)
- Less than 2% moisture absorption
- Requires no pretreatments, or preservatives
- You can walk on it
- Installs with less waste than cedar
- Made from 95% recycled materials
- 90% of people who learn about Enviroshake® choose Enviroshake® to replace their existing cedar roofing.

Cedar

- May require replacement due to rotting, warping, cracking, leaking, or diminished aesthetics
- Expensive to replace
- Life expectancy of only 15-20 yrs, but begins to lose its aesthetic appeal after 5-10 years
- High maintenance: requires pre-treatments preservatives, and other topical maintenance
- Poor fire rating
- Subject to mold, mildew and insects
- Depreciates in value from the date of installation
- Modern cedar shake are less durable than they used to be as newer growth cedar is used instead of denser old growth trees. New cedar roofs may only last 15-20 years depending on conditions compared to the 40-50 year likespan of cedar roofs in the past

Enviroshake® profiles

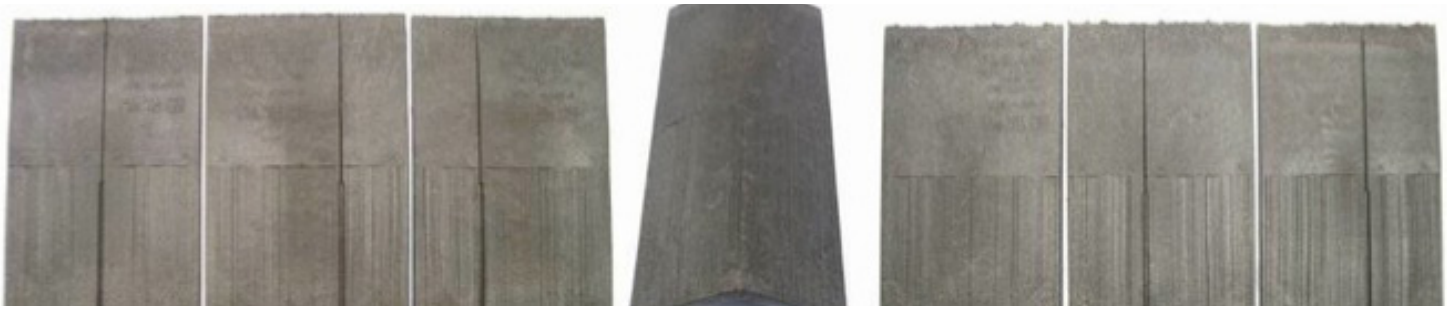

The Authentic Look of Cedar at 1/3 the Lifetime Cost.

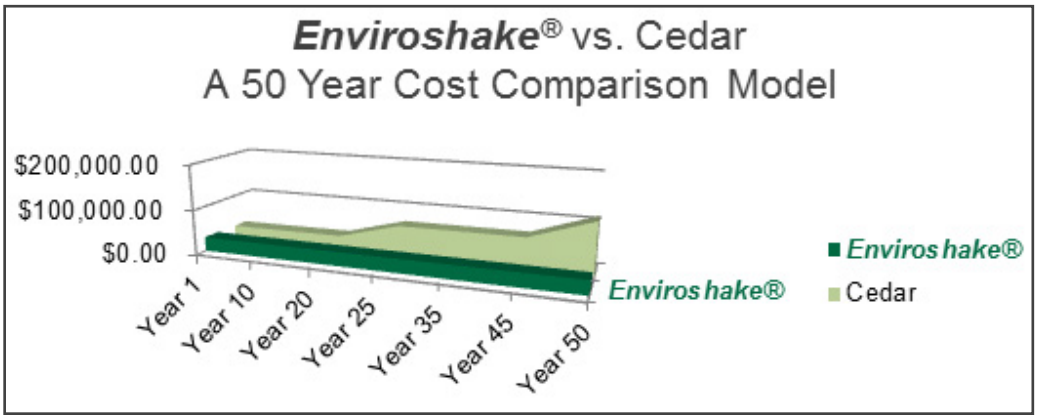

Enviroslate®

Enviroslate® is designed to authentically replicate the look of natural slate. Enviroslate® is the perfect solution for those who want the look of slate without the cost. Enviroslate®'s unique composition allows it to offer unsurpassed durability, longevity, and lifetime performance. It is mold, mildew, and insect resistant, fire, hail, and wind resistant, and comes with a fully transferable lifetime warranty.

1/3 the weight of natural slate! Enviroslate® offers significant lifetime savings compared to natural slate roofing. In fact, an Enviroslate® roof costs ½ of what natural slate costs to install! Unlike natural slate, Enviroslate® is lightweight so there is no need to reinforce your roof deck. Additionally, Enviroslate® is nailed to the roof eliminating the use of slate hooks and risk of falling pieces.

Profiles: Enviroslate® is designed to be installed at a 9" reveal. Each Enviroslate® tile measures 12" wide x 20" tall, with various edge and top textures to emulate natural slate. All ridge caps are custom made for each project.

Benefits of Enviroslate® vs. Natural Slate

- Maintenance Free, no annual repairs
- Enviroslate® is made from sustainable materials (95% recycled)
- Robust and durable: not damaged by walking on it, falling debris, or hail
- Significantly lower install cost, and lifetime cost
- 50 year lifespan with a lifetime warranty that is fully transferable
- Not damaged by freeze thaw
- Will not warp, crack, or chip
- 3X less weight than slate, so not reinforcement to the roof deck
- Can be installed on re-roof projects
- Easy to install
- Resistant to mold, mildew, algae and insects

Dare to Compare.

Can you identify which is real slate and which is *Enviroslate®?*

Enviroslate® is on the right and natural slate is on the left (above). Enviroslate® is on the left and natural slate is on the right (below).

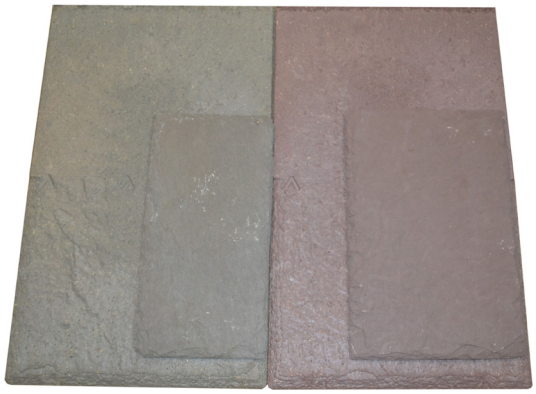

It's turning heads.
"Enviroslate® looks so authentic it's scary. It looks just like the slate I just took off. It's turning heads and people are stopping by and asking questions." - Certified Installer Charles Spelts of Bradford-Cameron Inc.

Nothing comes close to the authentic look of *Enviroslate®*.
"I have seen other synthetic slate products installed in the Calgary marketplace and nothing comes close to the authentic look of Enviroslate®. Goodmen Roofing is looking forward to the new opportunity from Enviroshake® Inc." - Nathan Gill

Enviroslate® Colour Options

Enviroshake® Inc. is pleased to offer various color options to emulate a natural slate roof. All Enviroslate® products will weather, and as with natural roofing materials, there will be slight variations in shading and thickness of the tiles, giving the product a natural look on the roof.

To see samples of our multi-tone blends visit www.enviroshake.com

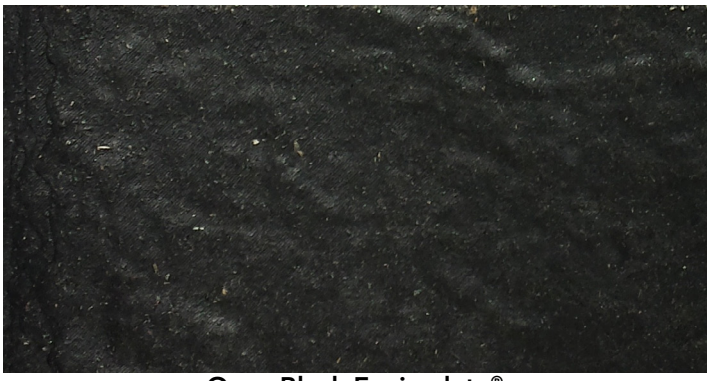

Onyx Black Enviroslate®

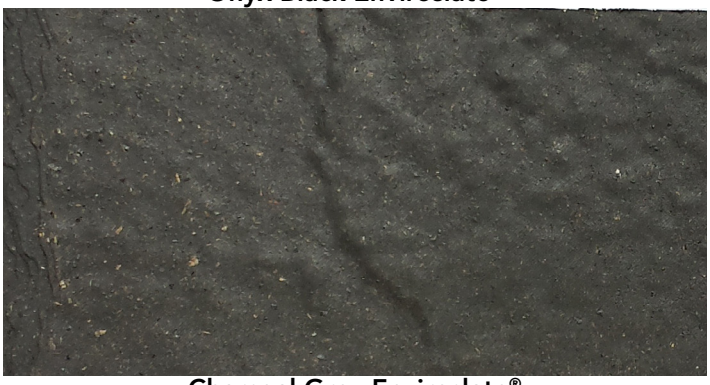

Charcoal Grey Enviroslate®

Stone Grey Enviroslate®

Sage Green Light Enviroslate®

Sage Green Dark Enviroslate®

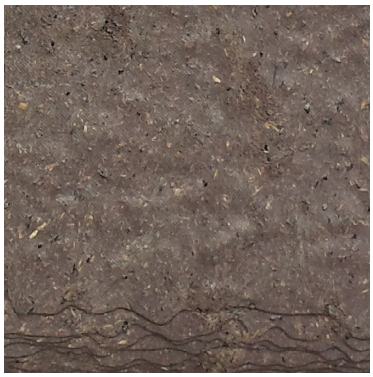

Plum Purple Light Enviroslate®

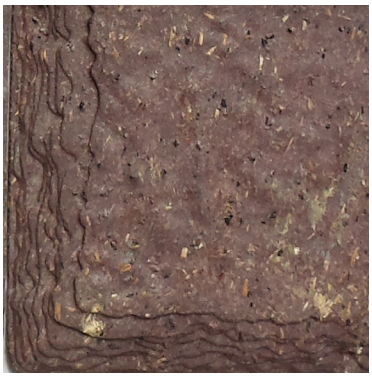

Plum Purple Dark Enviroslate®

The above photo is a 3D image rendering, and actual enviroslate colours may differ from this image. Contact Enviroshake Inc. for samples of our colour options.

Accolades.

"Our roof looks perfect!"
"We live across the street from a prestigious architect and builder in our area, known for his interest in historic preservation and the finest attention to detail. Every home he designs and builds has a cedar shake roof, with multiple pitches. His homes are highly coveted, and look like they've always been there. When we were having our Enviroshake® roof installed, he walked across the street to talk with us, and look at the product. He liked what he saw, and said he wanted to watch our roof as it aged. A few months later….Sold! He called our installer, and an Enviroshake® roof is now on one of his latest homes. This from a purist with the very highest standards. We knew we made the right choice. Our roof looks perfect!. We've had a very wet summer, and some of our neighbors have moss growing on their cedar roofs." -Carol Kranz

Enviroshake® Inc. products truly look like real cedar

"Wright Family Custom Homes was founded on four core values: quality, craftsmanship, integrity and excellence. When I discovered Enviroshake® Inc. I know their products were a great fit with our values as they embody the same beliefs. Enviroshake® Inc. products truly look like real
cedar, are maintenance free, durable, and offer significant lifetime savings for homeowners. I look forward to continuing to use Enviroshake® on my custom homes. " -Tim Wright, Wright Family Custom Homes, Asheville NC

"…We live in a seaside development with heavy moisture and strong winds that really affects life of wood roofs…Since having our Enviroshake® roof installed, it has weathered nicely with a soft grey look and no evidence of any mold/mildew on product after 4 years of installation. It has also survived many Northeaster windstorms and summer gales with no shingles becoming loose and absolutely watertight – Peter Minior

"I am from Calgary and we get really terrible hailstorms. Last year we replaced our roof with Enviroshake® and a few weeks later there was a massive hailstorm that caused almost every other house to have hail damage on their roof and required insurance claims. Our Enviroshake® withstood that and looks great!" Judi Lee

"Guess, if we can fool an appraiser, that would be considered a true testament that the Enviroshake® definitely does have the look of the cedar shakes"
"We love our roof and are so very pleased that we made the decision to purchase the Enviroshake® roof. It has enhanced the look of our country home and has given us exactly the look we wanted. We have had many compliments from family and friends on our roof. Because of the superior quality of the Enviroshake® shingle, it is so satisfying to know that we will not have to be replacing our roof for many years to come unlike the many roofs of asphalt shingles we have had in the past. We couldn't be happier. Just recently we had an appraiser come to our home for an appraisal and this person could not believe our roof was not the cedar shake shingles. They finally said they would accept our word after we offered to show them our purchase agreement. Guess, if we can fool an appraiser, that would be considered a true testament that the Enviroshake® definitely does have the look of the cedar shakes. You have managed to design a fantastic product. Congratulations to you. Thank you Enviroshake®!" -Bill & Betsy Buchanan

Testing.

Roof Classification Test UBC 15.2 - Class A system (refer to installation guide) or Class C as per ASTM E 108

Wind Uplift Test - Roof passed as per ASTM D 3161-99a, and Miami Dade at 180 MPH (290 km/h)

Wind Driven Rain Test - Modified Dade County PA 100-95 – meets performance requirements for Dynamic Pressure Water Infiltration Resistance to 106 MPH (170 km/h)

Weatherometer Test - Meets test requirements in accordance with ASTM G155 and ASTM D 638 - when viewed by 5x magnification there was no delaminating, cracking, erosion, or chalking that would affect the performance of the shake.

Impact Test UL2218 Level 4 - Passed

CCMC Registration #13105-R
CCMC (Canadian Construction Materials Centre) Technical Guide available on request
CCMC Evaluation Report (Re-evaluated November 2014) available on request.

Miami Dade Code Approvals
Florida Building Code Approvals

LEED & NGBS
The NAHB has assessed Enviroshake® as contributing 16.5 direct NGBS points.
Enviroshake® has been assessed by the USGBC as contributing between 1 and 2 points to LEED for homes, <4 for LEED 2009 NC, and <5 for LEED Canada NC, out of 9 available points.

About the Manufacturer.

Enviroshake® Inc. is considered a pioneer in the composite roofing industry, having been around since 1998. Enviroshake® Inc. prides itself on engaging in best practices, and we are always striving to minimize our environmental footstep. Any scrap materials generated during the manufacturing process are recycled back into the system. In fact, the final product itself is recyclable. Enviroshake® Inc. also directly diverts any waste materials that are not biodegradable. Enviroshake® Inc. is located in Chatham Ontario, a 1 hour drive East of Detroit/Windsor. Enviroshake® Inc. is proud to be ISO 9001-2008 certified company committed to quality in manufacturing.

Enviroshake®

Quality Engineered Roofing

PO Box 1462 Chatham Ontario Canada N7M 5W8
Toll Free 1-866-423-3302 Ph. 1-519-380-9265

www.enviroshake.com

Rate It Green™
Buy green confidently.

BuiltGreen

GreenSpec® LISTED

Intertek

Sec. 23.5-5. - Tax exemption for historic property.

a) Scope of tax exemptions. A method is hereby created for the city commission to allow tax exemptions for the restoration, renovation or rehabilitation of historic properties, as defined in these LDRs. The exemption shall apply to a maximum of one hundred (100) percent of the assessed value of all improvements to a historic property which result from and are directly attributable to restoration, renovation or rehabilitation made on or after the effective date of this section. The exemption applies only to taxes levied by the city. The exemption does not apply to taxes levied for the payment of bonds or to taxes levied authorized by a vote of the electors pursuant to Section 9(b) or 12, Article VII of the Florida Constitution. The exemption does not apply to taxes on personal property.

b) Duration of tax exemptions. Any exemption granted under this section to a particular property shall remain in effect for a maximum of ten (10) years, as specified in the ordinance approving the exemption. The exemption shall continue regardless of any change in the authority of the city to grant exemptions or any changes in ownership of the property. In order to retain an exemption, however, the historic character of the property and improvements which qualified the property for an exemption must be maintained over the period for which the exemption was granted.

c) Eligible properties and improvements. The property is qualified for an exemption under this section if:

1. At the time the exemption is granted, the property is:

(A) Individually listed in the National Register; or

(B) A contributing property within a historic district listed in the National Register; or

(C) Is designated as a city landmark or is a contributing property within a designated historic district under the terms of this article; and

(D) The HRPB has certified to the city commission that the property for which an exemption is sought satisfies the provisions of this section.

2. In order for an improvement to a historic property to qualify the property for an exemption, the improvement must be:

(A) Consistent with the United States Secretary of the Interior's Standards for Rehabilitation; and

(B) Determined by the HRPB to meet the criteria established in rules adopted by the Florida Department of State.

d) Applications.

1. Any person, firm or corporation that declares ad valorem tax exemption for the improvement of a historic property must, in the year the exemption is desired to take effect, file with the department for community sustainability, a written application on a form approved by the Florida Department of State.

2. The application shall consist of two (2) parts. Part 1, the preconstruction application, shall be submitted by the property owner or his agent before improvements are initiated, and Part 2, the request for review of completed work, shall be submitted by the property owner or his agent upon completion of the improvements.

3. Application deadline shall be established by the city then ensures that a resolution approving an application for historic preservation tax exemption shall be transmitted to and received by the Palm Beach County property appraiser no later than March 1 of each year.

4. All applicable fees shall be paid at the time the application is submitted. The application must include the following information:

A. The name of the property owner and the location of the historic property;

B. A description of the improvements to real property for which an exemption is requested and the date of commencement of construction of such improvements;

C. Proof, to the satisfaction of the HRPB, that the property that is to be rehabilitated or renovated is either listed on the National Register or is a designated landmark or a contributing property within a designated historic district;

D. Proof, to the satisfaction of the HRPB, that the improvements to the property will be consistent with the Secretary of the Interior's Standards for Rehabilitation and will be made in accordance with the guidelines developed by the Florida Department of State; and

E. Such other information identified in applicable Florida Department of State regulations.

5. The economic hardship portion of this chapter may not be applied to a property requesting tax abatement.

e) Required covenant. To qualify for an exemption, the property owner must enter into a covenant or agreement with the city for the term for which the tax exemption is granted. The form of the covenant or agreement must be approved by the Florida Department of State and must require that the character of the property and the qualifying improvements to the property be maintained during the period for which the exemption is granted. The covenant or agreement shall be binding on the current property owner, transferees and their heirs, successors and assigns. Violation of the covenant or agreement results in the property owner being subject to payment of the differences between the total amount of taxes which would have been due in March of each of the previous years in which the covenant or agreement was in effect had the property not received the exemption and the total amount of taxes actually paid in those years, plus interest on the difference calculated as provided in F.S. § 212.12(3).

f) Approval procedure.

1. Review by HRPB.

(A) Preconstruction applications. The HRPB, or its successor, shall review completed preconstruction applications and all required supporting materials to determine whether the property for which a proposed exemption is requested satisfies F.S. § 196.1997(11)(a); whether the proposed improvements are consistent with the Secretary of the Interior's Standards for Rehabilitation and Guidelines for Rehabilitating Historic Buildings (Revised 1990), U.S. Department of the Interior, National Park Service, which are hereby incorporated by reference into this section, and the criteria specified in Chapter 1A-38, F.A.C.; and for applications submitted under the provisions of F.S. § 196.1998, whether the improvements meet the criteria in Rule 1A-38.004(3) and (4), F.A.C. Upon completion of the review of a pre-construction application, the HRPB shall notify the applicant of the results of the review and shall make recommendations for correction of any planned work deemed to be inconsistent with the standards cited in Rule 1A-38.005, F.A.C. Each review of a preconstruction application shall be completed within thirty (30) days of receipt of a completed application and all required supporting materials.

(B) Review of completed work. Upon receipt of a request for review of completed work, and all required supporting materials, the department for community sustainability shall conduct a field inspection to determine whether or not the completed improvements are in compliance with the work described in the appropriate preconstruction application, subsequent approved amendments thereto, if any, and the Secretary of the Interior's Standards or Rehabilitation and Guidelines for Rehabilitating Historic Buildings. The staff recommendation shall be presented to the HRPB for review and consideration. Each review of a request for review of completed work shall be completed within thirty (30) days of receipt of the completed request and all required supporting materials.

(C) Recommendation regarding tax exemption. Upon completion of the review of a request for review of completed work, the HRPB shall recommend that the city commission grant or deny the exemption. Such review shall be conducted in accordance with the terms of this article and regulations governing historic preservation tax abatement which may be adopted by the Florida Department of State. The HRPB's recommendation and the reasons therefore, shall be provided to the applicant and to the city commission before consideration of the application by the city commission.

2. Approval by city commission. A majority vote of the quorum of the city commission shall be required to approve an application for tax exemption. Such exemption shall take effect on the January 1 following substantial completion of the improvements. The city commission shall include the following in its resolution or ordinance approving the tax exemption:

   (A) The name of the owner and the address and property control number of the historic property for which the exemption is granted.

   (B) The period of time for which the exemption will remain in effect and the expiration date of the exemption.

   (C) A finding that the historic property meets the requirements of this section and section 23.5-4.

3. Recording in public record. The covenant evidencing the tax abatement shall be recorded by the city at the owner's expense in the public records of Palm Beach County, Florida.

196.1997 Ad valorem tax exemptions for historic properties.—

(1) The board of county commissioners of any county or the governing authority of any municipality may adopt an ordinance to allow ad valorem tax exemptions under s. 3, Art. VII of the State Constitution to historic properties if the owners are engaging in the restoration, rehabilitation, or renovation of such properties in accordance with guidelines established in this section.

(2) The board of county commissioners or the governing authority of the municipality by ordinance may authorize the exemption from ad valorem taxation of up to 100 percent of the assessed value of all improvements to historic properties which result from the restoration, renovation, or rehabilitation of such properties. The exemption applies only to improvements to real property. In order for the property to qualify for the exemption, any such improvements must be made on or after the day the ordinance authorizing ad valorem tax exemption for historic properties is adopted.

(3) The ordinance shall designate the type and location of historic property for which exemptions may be granted, which may include any property meeting the provisions of subsection (11), which property may be further required to be located within a particular geographic area or areas of the county or municipality.

(4) The ordinance must specify that such exemptions shall apply only to taxes levied by the unit of government granting the exemption. The exemptions do not apply, however, to taxes levied for the payment of bonds or to taxes authorized by a vote of the electors pursuant to s. 9(b) or s. 12, Art. VII of the State Constitution.

(5) The ordinance must specify that any exemption granted remains in effect for up to 10 years with respect to any particular property, regardless of any change in the authority of the county or municipality to grant such exemptions or any change in ownership of the property. In order to retain the exemption, however, the historic character of the property, and improvements which qualified the property for an exemption, must be maintained over the period for which the exemption is granted.

(6) The ordinance shall designate either a local historic preservation office or the Division of Historical Resources of the Department of State to review applications for exemptions. The local historic preservation office or the division, whichever is applicable, must recommend that the board of county commissioners or the governing authority of the municipality grant or deny the exemption. Such reviews must be conducted in accordance with rules adopted by the Department of State. The recommendation, and the reasons therefor, must be provided to the applicant and to the governing entity before consideration of the application at an official meeting of the governing entity. For the purposes of this section, local historic preservation offices must be approved and certified by the Department of State.

(7) To qualify for an exemption, the property owner must enter into a covenant or agreement with the governing body for the term for which the exemption is granted. The form of the covenant or agreement must be established by the Department of State and must require that the character of the property, and the qualifying improvements to the property, be maintained during the period that the exemption is granted. The covenant or agreement shall be binding on the current property owner, transferees, and their

heirs, successors, or assigns. Violation of the covenant or agreement results in the property owner being subject to the payment of the differences between the total amount of taxes which would have been due in March in each of the previous years in which the covenant or agreement was in effect had the property not received the exemption and the total amount of taxes actually paid in those years, plus interest on the difference calculated as provided in s. 212.12(3).

(8) Any person, firm, or corporation that desires an ad valorem tax exemption for the improvement of a historic property must, in the year the exemption is desired to take effect, file with the board of county commissioners or the governing authority of the municipality a written application on a form prescribed by the Department of State. The application must include the following information:

(a) The name of the property owner and the location of the historic property.

(b) A description of the improvements to real property for which an exemption is requested and the date of commencement of construction of such improvements.

(c) Proof, to the satisfaction of the designated local historic preservation office or the Division of Historical Resources, whichever is applicable, that the property that is to be rehabilitated or renovated is a historic property under this section.

(d) Proof, to the satisfaction of the designated local historic preservation office or the Division of Historical Resources, whichever is applicable, that the improvements to the property will be consistent with the United States Secretary of Interior's Standards for Rehabilitation and will be made in accordance with guidelines developed by the Department of State.

(e) Other information deemed necessary by the Department of State.

(9) The board of county commissioners or the governing authority of the municipality shall deliver a copy of each application for a historic preservation ad valorem tax exemption to the property appraiser of the county. Upon certification of the assessment roll, or recertification, if applicable, pursuant to s. 193.122, for each fiscal year during which the ordinance is in effect, the property appraiser shall report the following information to the local governing body:

(a) The total taxable value of all property within the county or municipality for the current fiscal year.

(b) The total exempted value of all property in the county or municipality which has been approved to receive historic preservation ad valorem tax exemption for the current fiscal year.

(10) A majority vote of the board of county commissioners of the county or of the governing authority of the municipality shall be required to approve a written application for exemption. Such exemption shall take effect on the January 1 following substantial completion of the improvement. The board of county commissioners or the governing authority of a municipality shall include the following in the resolution or ordinance approving the written application for exemption:

(a) The name of the owner and the address of the historic property for which the exemption is granted.

(b) The period of time for which the exemption will remain in effect and the expiration date of the exemption.

(c) A finding that the historic property meets the requirements of this section.

(11) Property is qualified for an exemption under this section if:

(a) At the time the exemption is granted, the property:

1. Is individually listed in the National Register of Historic Places pursuant to the National Historic Preservation Act of 1966, as amended; or

2. Is a contributing property to a national-register-listed district; or

3. Is designated as a historic property, or as a contributing property to a historic district, under the terms of a local preservation ordinance; and

(b) The local historic preservation office or the Division of Historical Resources, whichever is applicable, has certified to the local governing authority that the property for which an exemption is requested satisfies paragraph (a).

(12) In order for an improvement to a historic property to qualify the property for an exemption, the improvement must:

(a) Be consistent with the United States Secretary of Interior's Standards for Rehabilitation.

(b) Be determined by the Division of Historical Resources or the local historic preservation office, whichever is applicable, to meet criteria established in rules adopted by the Department of State.

(13) The Department of State shall adopt rules as provided in chapter 120 for the implementation of this section. These rules must specify the criteria for determining whether a property is eligible for exemption; guidelines to determine improvements to historic properties which qualify the property for an exemption; criteria for the review of applications for exemptions; procedures for the cancellation of exemptions for violations to the agreement required by subsection (7); the manner in which local historic preservation offices may be certified as qualified to review applications; and other requirements necessary to implement this section.

History.—s. 1, ch. 92-159.

196.1998 Additional ad valorem tax exemptions for historic properties open to the public.—

(1) If an improvement qualifies a historic property for an exemption under s. 196.1997, and the property is used for nonprofit or governmental purposes and is regularly and frequently open for the public's visitation, use, and benefit, the board of county commissioners or the governing authority of the municipality by ordinance may authorize the exemption from ad valorem taxation of up to 100 percent of the assessed value of the property, as improved, any provision of s. 196.1997(2) to the contrary notwithstanding, if all other provisions of that section are complied with; provided, however, that the assessed value of the improvement must be equal to at least 50 percent of the total assessed value of the property as improved. The exemption applies only to real property to which improvements are made by or for the use of the existing owner. In order for the property to qualify for the exemption provided in this section, any such improvements must be made on or after the day the ordinance granting the exemption is adopted.

(2) In addition to meeting the criteria established in rules adopted by the Department of State under s. 196.1997, a historic property is qualified for an exemption under this section if the Division of Historical Resources, or the local historic preservation office, whichever is applicable, determines that the property meets the criteria established in rules adopted by the Department of State under this section.

(3) In addition to the authority granted to the Department of State to adopt rules under s. 196.1997, the Department of State shall adopt rules as provided in chapter 120 for the implementation of this section, which shall include criteria for determining whether a property is qualified for the exemption authorized by this section, and other rules necessary to implement this section.

History.—s. 2, ch. 92-159

CHAPTER 1A-38 TAX EXEMPTIONS FOR HISTORIC PROPERTIES

1A-38.001	Purpose. (Repealed)
1A-38.002	Definitions.
1A-38.003	Appplication for Exemption.
1A-38.004	Evaluation of Property.
1A-38.005	Evaluation of Improvements.
1A-38.006	Covenant.
1A-38.007	Certification of Local Historic Preservation Office.

1A-38.002 Definitions.

The following words and phrases, when used in this chapter, shall have the following meanings, except where the context clearly indicates a different meaning:

(1) "Contributing property" means a building, site, structure, or object which adds to the historical architectural qualities, historic associations, or archaeological values for which a district is significant because

(a) It was present during the period of significance of the district, and possesses historic integrity reflecting its character at that time,

(b) Is capable of yielding important information about the period, or

(c) It independently meets the National Register of Historic Places criteria for evaluation set forth in 36 CFR Part 60.4, incorporated by reference.

(2) "Division" means the Division of Historical Resources of the Department of State.

(3) "Historic property" means a building, site, structure, or object which is:

(a) Individually listed in the National Register of Historic Places;

(b) A contributing property in a National Register listed historic district;

(c) Designated as a historic property or landmark under the provisions of a local historic preservation ordinance; or

(d) A contributing property in a historic district designated under the provisions of a local historic preservation ordinance.

(4) "Improvements" means changes in the condition of real property brought about by the expenditure of labor or money for the restoration, renovation or rehabilitation of such property. Improvements shall include additions and accessory structures (i.e., a garage, cabana, guest cottage, storage/utility structure) so long as the new construction is compatible with the historic character of the building and site in terms of size, scale, massing, design and materials, and preserves the historic relationship between a building or buildings, landscape features and open space.

(5) "Local government" means the board of county commissioners or the governing authority of the municipality that has adopted an ordinance providing for property tax exemption for improvements to historic properties pursuant to Section 196.1997 or 196.1998, F.S.

(6) "Local historic preservation office" means a local government agency certified by the Division as qualified to review applications for property tax exemptions pursuant to Sections 196.1997 or 196.1998, F.S.

(7) "National Register of Historic Places" means the list of historic properties significant in American history, architecture, archeology, engineering and culture, maintained by the Secretary of the Interior, as established by the National Historic Preservation Act of 1966 (Public Law 89-665; 80 STAT. 915; 16 U.S.C. 470), as amended.

(8) "Noncontributing property" means a building, site, structure, or object which does not add to the historic architectural qualities, historic associations, or archaeological values for which a district is significant because

(a) It was not present during the period of significance of the district,

(b) Due to alterations, disturbances, additions, or other changes, it no longer possesses historic integrity reflecting its character at that time or is incapable of yielding important information about the period, or

(c) It does not independently meet the National Register of Historic Places criteria for evaluation.

(9) "Renovation" or "rehabilitation". For historic properties or portions thereof which are of historical or architectural significance, "renovation" or "rehabilitation" means the act or process of returning a property to a state of utility through repair or alteration which makes possible an efficient contemporary use while preserving those portions or features of the property which are significant to its historical, architectural, cultural and archaeological values. For historic properties or portions thereof which are of

archaeological significance or are severely deteriorated, "renovation" or "rehabilitation" means the act or process of applying measures designed to sustain and protect the existing form and integrity of a property, or reestablish the stability of an unsafe or deteriorated property while maintaining the essential form of the property as it presently exists.

(10) "Restoration" means the act or process of accurately recovering the form and details of a property and its setting as it appeared at a particular period of time by means of the removal of later work or by the replacement of missing earlier work.

(11) "Useable space" means that portion of the space within a building which is available for assignment or rental to an occupant, including every type of space available for use of the occupant.

Specific Authority 196.1997, 196.1998 FS. Law Implemented 196.1997, 196.1998 FS. History–New 1-31-94, Amended 9-3-00.

1A-38.003 Application for Exemption.

(1) Except as provided in Rule 1A-38.003(2), F.A.C., application for the property tax exemption shall be made on the three-part Historic Preservation Property Tax Exemption Application, DOS Form No. HR3E101292, revised 9-3-00 and incorporated by reference. This form may be obtained by writing the Division at: Bureau of Historic Preservation, 500 South Bronough Street, Tallahassee, Florida 32399-0250, or from the local historic preservation office in the jurisdiction of the local government. Part 1-Evaluation of Property Eligibility and Part 2-Description of Improvements may be submitted before or during construction, or upon completion of the improvements; however, property owners are strongly encouraged to submit these parts of the application to ensure property eligibility and secure preliminary project approval before construction is initiated. Part 3-Request for Review of Completed Work shall be submitted upon completion of the improvements. For improvements completed before application is made, Part 3-Request for Review of Completed Work must accompany the Part 2 submission.

(2) In lieu of DOS Form No. HR3E101292, any local government with a local historic preservation office certified pursuant to Rule 1A-38.007, FAC., may develop an alternative application form for use by property owners within its jurisdiction; however, such alternative application form shall:

(a) At a minimum, require the property owner to provide the information indicated in DOS Form No. HR3E101292,

(b) Be in the two-part format of DOS Form No. HR3E101292, and

(c) Be approved by the Division.

(3) The completed Part 1-Evaluation of Property Eligibility, Part 2-Description of Improvements and Part 3-Request for Review of Completed Work shall be submitted by the property owner to the local historic preservation office or the Division, whichever is designated by the local ordinance as the representative of the local government for the purpose of reviewing applications for the property tax exemption.

(4) Upon receipt of the completed Part 1-Evaluation of Property Eligibility and Part 2-Description of Improvements, and all required supporting materials, the local historic preservation office or the Division shall conduct a review to determine.

(a) Whether the property for which an exemption has been requested satisfies Section 196.1997(11)(a), F.S.,

(b) Whether the proposed, in progress, or completed improvements are consistent with The Secretary of Interior's Standards for Rehabilitation and Guidelines for Rehabilitating Historic Buildings (Revised 1990), U.S. Department of the Interior, National Park Service, incorporated by reference, and the criteria in Chapter 1A-38, F.A.C., and

(c) For applications submitted under the provisions of Section 196.1998, F.S., whether the improvements meet the criteria in Rule 1A-38.004(3) and (4). Part 2-Description of Improvements will not be reviewed prior to review of Part 1-Evaluation of Property Eligibility and certification that the subject property is a historic property as defined in Rule 1A-38.002(3) and, for applications submitted under the provisions of Section 196.1998, F.S., that the property meets the criteria in Rules 1A-38.004(4) and (5). Copies of the Secretary of the Interior's Standards for Rehabilitation and Guidelines for Rehabilitating Historic Buildings may be obtained by writing the Division at the address indicated in Rule 1A-38.003(1), F.A.C. or from the Superintendent of Documents, U.S. Government Printing Office, Washington D.C. 20402.

(5) Upon completion of the review of Part 1-Evaluation of Property Eligibility and Part 2-Description of Improvements, the local historic preservation office or Division shall notify the applicant and the local government in writing of the results of the review and shall make recommendations for correction of any planned or completed work deemed to be inconsistent with the standards cited in Rule 1A-38.005, F.A.C.

(6) Each review of Part 1-Evaluation of Property Eligibility and Part 2-Description of Improvements conducted by the Division shall be completed within 30 days following receipt of the completed application and all required supporting materials. Each review

of Part 1-Evaluation of Property Eligibility and Part 2-Description of Improvements conducted by a local historic preservation office shall be completed consistent with the routine schedules and procedures of the local design review body as set forth by the local government.

(7) Upon receipt of Part 3-Request for Review of Completed Work and all required supporting materials, the local historic preservation office or the Division shall conduct a review to determine whether or not the completed improvements are in compliance with the work described in an approved Part 2-Description of Improvements, subsequent approved amendments, if any, and the Secretary of the Interior's Standards for Rehabilitation and Guidelines for Rehabilitating Historic Buildings. If Part 2-Description of Improvements and Part 3-Request for Review of Completed Work are submitted after completion of the improvements, both shall be reviewed concurrently for compliance with the Secretary of the Interior's Standards for Rehabilitation and Guidelines for Rehabilitating Historic Buildings. The local historic preservation office or the Division, as applicable, reserves the right to inspect the completed work to verify such compliance.

(8) On completion of the review of a Request for Review of Completed Work, the local historic preservation office or the Division shall recommend that the local government grant or deny the exemption. The recommendation, and the reasons therefor, shall be provided in writing to the applicant and to the local government. The recommendation shall advise the applicant of his right to a fair hearing pursuant to Section 120.57, F.S., and procedures set forth by the local government.

(9) Each review of a Request for Review of Completed Work conducted by the Division shall be completed within 30 days following receipt of the completed request and all required supporting materials. Each review of a Request for Review of Completed Work conducted by a local historic preservation office shall be completed consistent with the routine schedules and procedures of the local design review body as set forth by the local government.

Specific Authority 196.1997(6) FS. Law Implemented 196.1997, 196.1998 FS. History–New 1-31-94, Amended 9-3-00.

1A-38.004 Evaluation of Property.

(1) Part 1-Evaluation of Property Eligibility submitted to the Division for properties which have been individually designated as historic properties or landmarks under the provisions of a local historic preservation ordinance shall include documentation substantiating such designation and describing the historic, archaeological or architectural features which provided the basis for designation. Acceptable documentation shall include a copy of the designation report for the property and official correspondence notifying the property owner of designation.

(2) For properties located in a historic district listed in the National Register of Historic Places, the local historic preservation office or the Division shall apply the definitions of contributing and noncontributing properties as set forth in Rules 1A-38.002(1) and 1A-38.002(6), F.A.C., respectively, to determine whether the property is a contributing property.

(3) For properties located in a historic district designated by local ordinance, the local historic preservation office or the Division shall apply the criteria set forth in the local ordinance to determine whether the property is a contributing property. If the local ordinance does not include criteria or a process sufficient to determine whether the property is a contributing property, the local historic preservation office or the Division shall apply the definitions of contributing and noncontributing properties as set forth in Rules 1A-38.004(1) and 1A-38.002(6), F.A.C., respectively, to determine whether the property is a contributing property.

(4) For purposes of the exemption under Section 196.1998, F.S., a property is being used for government or nonprofit purposes if the occupant or user of at least 65 percent of the useable space of a historic building or of the upland component of an archaeological site is an agency of the federal, state or local government, or a nonprofit corporation whose articles of incorporation have been filed by the Department of State in accordance with Section 617.0125, F.S.

(5) For purposes of the exemption under Section 196.1998, F.S., a property is considered regularly and frequently open to the public if public access to the property is provided not less than 52 days a year on an equitably spaced basis, and at other times by appointment. Nothing in this rule shall prohibit the owner from charging a reasonable nondiscriminatory admission fee.

Specific Authority 196.1997(13), 196.1998(3) FS. Law Implemented 196.1997, 196.1998 FS. History–New 1-31-94, Amended 9-3-00.

1A-38.005 Evaluation of Improvements.

The local historic preservation office or the Division shall apply the recommended approaches to rehabilitation as set forth in the Secretary of the Interior's Standards for Rehabilitation and Guidelines for Rehabilitating Historic Buildings in evaluating the

eligibility of improvements to the historic property. For improvements intended to protect or stabilize severely deteriorated historic properties or archaeological sites, the local historic preservation office or the Division shall apply the following additional standards:

(1) Before applying protective measures which are generally of a temporary nature and imply future historic preservation work, an analysis of the actual or anticipated threats to the property shall be made.

(2) Protective measures shall safeguard the physical condition or environment of a property or archaeological site from further deterioration or damage caused by weather or other natural, animal or human intrusions.

(3) If any historic material or architectural features are removed, they shall be properly recorded and, if possible, stored for future study or reuse.

(4) Stabilization shall reestablish the structural stability of a property through the reinforcement of loadbearing members or by arresting material deterioration leading to structural failure. Stabilization shall also reestablish weather resistant conditions for a property.

(5) Stabilization shall be accomplished in such a manner that it detracts as little as possible from the property's appearance. When reinforcement is required to reestablish structural stability, such work shall be concealed wherever possible so as not to intrude upon or detract from the aesthetic and historical quality of the property, except where concealment would result in the alteration or destruction of historically significant material or spaces.

Specific Authority 196.1997(13), 196.1998(3) FS. Law Implemented 196.1997, 196.1998 FS. History–New 1-31-94.

1A-38.006 Covenant.

(1) Except as provided in Rule 1A-38.006(2), FAC., a property owner qualifying for an exemption pursuant to Sections 196.1997 and 196.1998, F.S., and the local government granting the exemption shall execute the Historic Preservation Property Tax Exemption Covenant, DOS Form No. HR3E111292, effective 1-31-94 and incorporated by reference. DOS Form No. HR3E111292 may be obtained by writing the Division at the address in Rule 1A-38.003(1), FAC. or from the local historic preservation office in the jurisdiction of the local government. On or before the effective date of the exemption, as established by the applicable local government, the owner of the property shall have the Covenant recorded with the deed for the property in the official records of the county in which the property is situated.

(2) In lieu of DOS Form No. HR3E111292, any local government may develop an alternative form of covenant for use within its jurisdiction; however, such alternative form of covenant shall:

(a) at a minimum, bind the parties to conditions and requirements equivalent to those set forth in DOS Form No. HR3E111292, and

(b) be approved by the Division.

(3) The following conditions shall provide justification for removal of a property from eligibility for the property tax exemption provided under Section 196.1997, F.S.:

(a) The owner is in violation of the provisions of the Historic Preservation Tax Exemption Covenant; or

(b) The property has been damaged by accidental or natural causes to the extent that the historic integrity of the features, materials, appearance, workmanship and environment, or archaeological integrity which made the property eligible for listing in the National Register or designation under the provisions of the local preservation ordinance have been lost or so damaged that restoration is not feasible.

(4) For the exemption provided under Section 196.1998, F.S., the following conditions, as well as those indicated in Rule 1A-38.006(3), FAC., shall justify removal of a property from eligibility for the exemption:

(a) The property is sold or otherwise transferred from the owner who made application and was granted the exemption; or

(b) The property no longer meets the requirements set forth in Rules 1A-38.004(4) and 1A-38.004(5), FAC.

Specific Authority 196.1997(7) FS. Law Implemented 196.1997, 196.1998 FS. History–New 1-31-94.

1A-38.007 Certification of Local Historic Preservation Office.

(1) Criteria for certification shall be as set forth in sections A and B of the Florida Certified Local Government Guidelines (Revised November 1993) promulgated by the Division and incorporated by reference. These guidelines may be obtained by writing the Division at the address in Rule 1A-38.003(1), FAC.

(2) Existing Certified Local Governments shall automatically be designated local historic preservation offices for the purposes set forth in Sections 168.1997 and 168.1998, F.S.

(3) Other local governments requesting certification of a local historic preservation office shall apply on the Application for Certification, Florida Certified Local Governments Program, which is Appendix C to the Florida Certified Local Government Guidelines.

(4) Within 45 days following receipt of a complete Application for Certification and all required supporting material, the Division shall render a written determination regarding the application, either approving or denying certification for the purposes set forth in Sections 196.1997 and 196.1998, F.S. For denials, the Division shall provide the applicant with an explanation, clearly indicating the reasons for denial.

(5) Certification pursuant to this rule shall remain in effect so long as the local government maintains a program which meets the minimum requirements set forth in sections A and B of the Florida Certified Local Government Guidelines.

Specific Authority 196.1997(6) FS. Law Implemented 196.1997, 196.1998 FS. History–New 1-31-94.

Lake Worth, Florida. The Art of Florida Living.sm

City Of Lake Worth
Department for Community Sustainability
Planning, Zoning and Historic Preservation Division
1900 Second Avenue North · Lake Worth · Florida 33461· Phone: 561-586-1687

MEMORANDUM DATE: May 4, 2016

AGENDA DATE: May 11, 2016

TO: Chair and Members of the Historic Resources Preservation Board

RE: **812 South Lakeside Drive**

FROM: Aimee N. Sunny, Preservation Planning Coordinator
Department for Community Sustainability

TITLE: HRPB Project Number 15-00100022: Consideration of a Certificate of Appropriateness (COA) for new construction of an addition to the existing structure at **812 South Lakeside Drive**; PCN# 38-43-44-27-01-024-0050. The subject property was constructed in 1942 and is a contributing resource within the South Palm Park Local Historic District.

Due to inconsistencies in the zoning data provided, Staff is requesting a continuance of this case to the June 8, 2016, regular HRPB meeting.

OWNER/APPLICANT: Arthur Marino
812 South Lakeside Drive
Lake Worth, FL 33460

BACKGROUND:

The two-story single-family structure at 812 South Lakeside Drive was designed by Edgar S. Wortman in 1942. The property has public frontage on South Lakeside Drive to the west and the Intracoastal Waterway to the east. The building was constructed in an Art Deco/Art Moderne architectural style, and still retains most of its character defining features. These character defining features include the metal casement windows, glass block windows, blue depression glass window, projecting triangular window, flat roof with decorative parapet and eyebrow banding, and low-lying horizontal masonry construction with a smooth stucco finish.

The original architectural plans for the building are available in the City's property files. Based on the information in the property file, few exterior alterations have occurred over time. The property file does indicate that the original design for the structure was only one-story, however it appears that the structure was changed to two stories either just before or during construction. Overall, the building retains a high degree of historic integrity of location, setting, materials, and design, and is an excellent example of the Art Moderne style of architecture.

REQUEST:

The Applicant is requesting to construct a 5,483 square foot addition to the existing 1,428 square foot existing structure, per the plans and documentation provided. The new addition will be set back approximately 30 feet from the existing structure, and will be connected by a covered, cantilevered, open breezeway with a permanent foundation.

ANALYSIS:

Zoning

Due to the fact that the proposal does not meeting the Zoning Code, Staff proposes that the case be continued to a later meeting in order to give the Applicant time to revise the proposal.

The following table includes some of the basic specifications for the proposed construction:

Dimension	Required by Code	Proposed
Lot size	7,500 sq. ft for single-family	13,150 sq. ft existing (50' x 263')
Front setback	20'-0"	50' to bldg front (no change)
Side setback	10% of lot width, minimum 3'-0"	North = 6'-0" to proposed addition; South = 6'-0" to proposed addition
Rear setback	15' or 10% of lot depth for primary structures, whichever is less	15' to bldg rear
Floor Area Ratio	.45 = 5,917 sq. ft	0.52 = 6,911 sq. ft
Building Lot Coverage	30% = 3,945 sq. ft	33% = 4,357 sq. ft
Impermeable surface	50% max. = 6,575 sq. ft	43% = 5,770 sq. ft
Parking Spaces	2 spaces	2+ spaces

Public Comment

At the time of publication of this report, Staff has not received any public comment regarding this project.

CONSEQUENT ACTION:

Approve the application; approve the application with conditions; continue the hearing to a date certain to request additional information; or deny the application.

RECOMMENDATION:

Staff recommends that the Board continue the case to the June 8, 2016, HRPB Regular Meeting in order to give the Applicant time to revise the proposal to comply with the Zoning Code.

POTENTIAL MOTION:

I MOVE TO CONTINUE HRPB #15-00100022: Consideration of a Certificate of Appropriateness (COA) for new construction of an addition for the single-family structure located at **812 S Lakeside**, to the June 8, 2016, HRPB regular meeting, as recommended by Staff.

LOCATION MAP

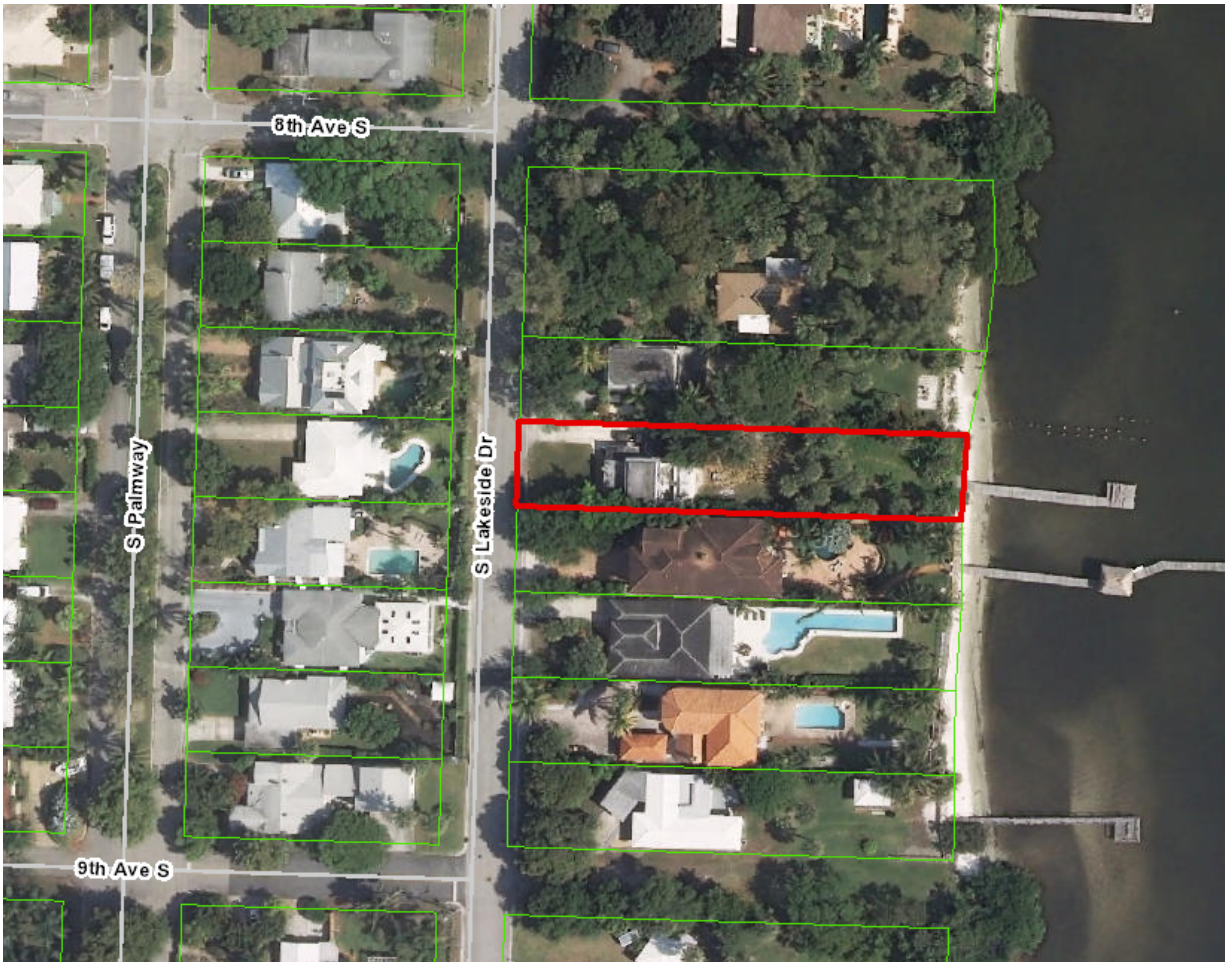

XFINITY
HOME

PROTECTED BY
XFINITY
HOME

Rational Analyses: "Certificate of Appropriateness"

Past 'C O A" Project Consideration:

A demonstration comparison of a complex historical project approved by the Historical Board and the City was presented by Marino, at the second historical meeting.

Marino displayed picture slides and provided comment related to Tuscan Villas project, located at 1001 North Federal Highway, Lake Worth. The Tuscan project consisted of: a). waivers and variance; b). lifting the existing Art Moderne Contributing Residence from its foundation and moving it from its existing location to the extreme S.E. corner of the property; c). constructing twelve (12) 3-story Southern Mediterranean Revival style condominiums surrounding it; d). the historical project was found acceptable by the Board and City; e). Certificate of Acceptance, building permits and CO were granted and issued to the project; f). the Mediterranean villas are in close proximity with and in all primary views of Contributing Residence and their mass and scale eclipse said Contributing Residence; g). Contributing Residence has been moved to Federal Highway direct front exposure; h). A collage of exposed electrical panels, electric transformer, telephone and sprinkler boxes further compromises primary view of Contributing Residence; i}. pursuant to Secretary of Interior Standard; Southern Mediterranean Revival style is not compatible or in harmonious character of Contributing Residence, which is Art Moderne.
(The City has all slides of the Marino presentation).

Recent "Certificate of Acceptance" Project:

Lake Worth's Gulfstream Hotel appears set for renovation

Hotel will have two 87-unit hotel buildings, a restaurant, rooftop sky bar and parking garage
January 29, 2016 12:45PM
By Dan Weil

Excerpt as follows:

"Lake Worth's Gulfstream Hotel, built in 1925 and added to the National Register of Historic Places in 1983, looks set to be revived after being shuttered for more than 10 years. Last month, the Lake Worth City Commission approved a zoning change that will allow Delray Beach-based developer Hudson Holdings to go ahead with its $70 million plan to renovate the property at Lake Avenue and South Lakeside Drive, a block from the Intracoastal Waterway. The commission approved a rezoning of the seven-parcel site to entirely downtown mixed-use from the previous combination of downtown mixed-use and multi-family residential. Lake Worth has been criticized for being inconsistent in its development, because of staunch political opposition to building plans. Even the city commission's approval of rezoning for the Gulfstream project came only in a 3-to-2 vote. The opponents, commissioners Christopher McVoy and Ryan Maier, were unavailable to speak with TRD, but they have publicly expressed concern about the height of the project, specifically the 65-foot maximum for the annex building Hudson Holdings plans to restore the crumbling, six-story hotel, shrinking its room count to 87 from 106, and intends to wipe away two nearby buildings so it can erect a five-story, 87-room annex to the hotel instead. See more at: http://therealdeal.com/miami/2016/01/29/lake-worths-gulfstream-hotel-finally-appears-set-forenovation/#sthash.9REXh0fN.dpuf

[Exhibit "A"]

Marino Residence

Site Plan Approval, Certificate of Appropriateness for Addition, Demolition, Property Tax Exemption, Building Permits

Arthur Marino Jr. ("Marino"), seeks approval for Site Plan, Certificate of Acceptance, Demolition, Tax Exemption and Building Permits in regard to the property located at 812 South Lakeside Drive, Lake Worth, Florida 33460.
Said property is located within the South Palm Park Historic District, the property is designated residential.

Property Architecture and History:

812 South Lakeside Drive Residence design was strongly influenced by design elements of "Art Moderne" / "Streamline Moderne"/ "Art Deco".

The sleek Art Moderne style originated in the Bauhaus movement, which began in Germany. Bauhaus architects wanted to use the principles of classical architecture in their purest form, designing simple, useful structures without ornamentation or excess. Building shapes were based on curves, triangles, and cones. Bauhaus ideas spread worldwide and led to the International Style in the United States.

Classic Streamline Moderne/ Art Moderne is a late type of the Art Deco architecture and design that emerged in the 1930s. During the 1930s and 1940s, the Art Moderne style was one of the most popular styles found throughout Florida. Art Moderne buildings usually are 1-3 stories in height, asymmetrical and essentially cubic. Generally, Art Moderne and/or Streamline Moderne, is considered to come after the introduction of Art Deco, although they share many of the same characteristics.

Classic Art Moderne reflects the early twentieth century excitement over technological advancements, high-speed transportation, and innovative new construction techniques. The architecture is usually streamlined like many of the industrial designs of the 1930s. Walls are typically white stucco with a flat finish, decorative detail is minimized, relying instead on strong horizontal elements like metal banding, coping at the roofline and clean metal balustrades to impart fresh, contemporary character.

Aluminum awning, jalousie, fixed windows, and frequently using glass block, alternately, windows at corners met with minimal framing to create an illusion of a window-wrapped corner. New window styles emphasized horizontal lines by stacking rectangular lights in a metal sashits architectural style emphasized curving forms, long horizontal lines, portholes, pipe railing, wave motifs, brow-like projections and other nautical references are sometimes used.

Materials such as glass block, mirrored or stainless steel panels, aluminum doors and window trim often are used. Grooves, bands (sometimes called “racing stripes”), and balustrades contribute to the horizontality of the buildings.

812 S. Lakeside Contributing Residence Architectural Design:

Renowned architect, AIA president and Lake Worth resident, Mr. Edgar S. Wortman designed contributing Residence. Contributing Historical Residence design incorporates a balance, harmony and a design mix of architecture elements of Art Moderne/Streamline Moderne/Art Deco design.

Wortman designed the Contributing Residence incorporating an uncommon approach in both design and materials used, by using a harmonious and rhythmic blend of Deco/Moderne architecture.

Asymmetrical elements were used throughout the design, independent of, yet contributing to, the final harmonious balance.

Wortman arranged both positive elements and negative space in such a way that no one area of the design overpowers other areas. Every element works together and fits together in a seamless whole. The individual parts of the residence contribute to their sum but don’t try to become the sum.

The residence includes design elements of Art Deco such as stepped straight rooflines with cantilever eyebrows, round blue color glass window, operable blue color casement windows, glass block windows, wood glass bay window, wood French type, glass entry door, wood blue glass door lites, curved entry concrete wall and grooved stucco bands.

Unlike Classic “Art Moderne”, that usually incorporates metal framed windows arranged in a horizontal band, such as awning or jalousie and corner wrap around windows, the (812) residence has vertical operable casement windows; usually buildings built in the 1930's "Art Deco" style were originally fitted with what are typically called "factory sash "casement windows, “as is” incorporated in (812).

Wood was strategically integrated into the residence by Wortman in a sloped glass Bay window, as well as wood [blue glass color] round porthole window and wood glass French entry door and fixed wood side-lite [blue glass color] windows at entry of residence.

No decorative aluminum elements or metal banding were incorporated into residence; no railings, balusters and no metal trim.

In Classic Art Moderne often two straight walls converge into a rounded corner; Wortman designed the residence incorporating all square, straight walls and corners.

Roof, Wall and Finish:

The existing Contributing Residence construction of the exterior and interior walls are poured concrete block, smooth stucco, grooved stucco banding and white paint.

The roof is flat, (no slope), poured reinforced concrete with built up hot mopped asphalt roofing atop, stepped 2'-0'' eyebrows overhang from roof.

Windows:

The windows consist of a combination of operable casement type, fixed wood rectangular sloped bay window, round fixed wood frame window and monolithic glass. There is an entry door, which is French type, solid core wood and monolithic glass, fixed side lites and one solid core wood and glass wood door at south alternate egress of home.

Carport:

The residence includes an attached non-contributing carport that was added many years after Contributing Residence was built. The carport is termite ridden, dilapidated and structurally not sound, which must and is planned to be demolished.

Deco Walls:

The Contributing Residence has a curved concrete and stucco Deco wall located at entry.

Builder:

The local renown-building contractor, Mr. Samuel Ackerman built the two-story existing Contributing Residence in the year 1942.

Published:

The residence has been included in a published book by Sharon Koskoff named "Images of America, Art Deco of the Palm Beaches"; Contributing Residence 812 S. Lakeside Drive is displayed and described on page number 45. In this publication Koskoff names the design as Art Deco / Nautical Moderne.

Marino Project Design Team:

Ms. Sharon Koskoff, founding president of the Art Deco Society of the Palm Beaches, author, artist, historical architectural expert and designer. A full-time designer, mural artist, keynote speaker and preservationist.

Mr. Ron Uphoff is a respected and talented architect; his work can be seen in residential homes, commercial buildings and churches. His excellent work ethics are likewise appreciated by his long list of past and present clientele because he often delivers a quality product well before the scheduled deadline.

Mr. John Griffin, respected structural engineer, developer and inventor, who possesses expertise in planning, designing, obtaining approvals, permitting, inspections, and certification of construction projects. Mr. Griffin is the inventor of the "All Wall System™ "; a unique Miami-Dade approved wall system designed and certified for hurricane resistant and security / eco-Homes.

Project COA History:

Marino has met to date with the City on three separate occasions in 2015 and with the Historical Board on separate two occasions in 2015, relative to obtaining a COA and Building approval. Marino has executed all paperwork and has paid all fees relative to Certificate of Appropriateness, demolition of non-contributing carport, and required ancillary services required for site approval.

Project Summary Proposal:

In accordance with of the Secretary of the Interior's Standards, City's Regulation and Qualitative Standards, the project is designed to promote preservation of Contributing Residence and natural surrounding conditions, harmonious, visually compatible and efficient organization, privacy, screening and buffering while also

providing increasing value and other enhancement of the residential neighborhood of South Palm Park.

To develop the proposed project Marino has previously submitted to the City and now again respectfully requests all consideration and approvals as required fulfilling the previous requests and the following:

- Site Plan Approval to allow a 4,500 + square foot non-contributing addition to the historic Contributing Residence.

- New non-contributing addition to be built in an energy efficient manner and will follow the Florida Green building Standard Guidelines. [see Exhibit "C"]

- Certificate of Appropriateness for construction of new non-contributing addition, inclusive but not limited to; privacy walls, walks, drives, loggia, breezeway, fences, pads and other ancillary building requirements as required in scope, construction and approvals;

- Certificate of Appropriateness for Demolition for existing non-contributing, termite ridden and dilapidated carport;

- Approval for Historic Preservation Property Tax Exemption in accordance with relevant Florida Law and Statutes, applicable Statutes and Sections, inclusive of Florida Statute Section 196.1997 (11) (a);

Section 23.5-5. Tax Exemption for Historic Property:

a) Scope of tax exemptions. A method is hereby created for the City Commission to allow tax exemptions for the restoration, renovation or rehabilitation of historic properties, as defined in these LDRs. The exemption shall apply to a maximum of one hundred percent (100%) of the assessed value of all improvements to a historic property, which result from and are directly attributable to restoration, renovation or rehabilitation made on or after the effective date of this section. The exemption applies only to taxes levied by the City.

Waivers / Variance:

No Historical Waiver or Variance is intended at this time to be sought for the proposed new project.

Site Plan Approval/ Certificate of Acceptance:

Petitioner, Marino requests Site Plan Approval and Certificate of Approval relative to all information herein recited and submitted in the past.

Rehabilitation:

The Contributing Residence will not be rehabilitated and left "as is" except for painting of the exterior of the residence. Residence will remain the existing color with accent of the eyebrows. The proposed new non-contributing addition is designed and will be constructed in accordance with the Secretary's Standard inclusive of Sections 9 and 10.

Placement of New Addition: [see site plan]

Pursuant to the Secretary of Interior's Standards, Standard 1, the property's footprint can accommodate the New Addition location harmoniously at the East, (rear) of the property relative to the Contributing residence.

Due to the property's depth, the new non-contributing addition has the ability to be set back on the property over fifty feet, (50'+) from Contributing Residence. The new addition and site characteristics will not hinder or ill affect the primary and/or secondary views of the Contributing residence.

The Contributing residence is isolated from the new non-contributing addition and furthermore, the setting and context of the property is protected.

Non-contributing addition will be bridged and otherwise connected to the Contributing Residence pursuant to Standard and Code, by a breezeway.

The proposed project is visually compatible, harmonious and efficiently organized in relation to topography, the size and type of the property, the character of adjoining property's and the type and size of surrounding properties and buildings.

As described above, the project entails adding a new non-contributing addition to the rear (east) of the historic Contributing Residence. Florida native landscape and a balance of other complimentary landscape are proposed in the front of Contributing Residence as well as non-contributing addition courtyard and other strategic property locations. The project is designed to preserve the existing landscape, when possible, in

its natural state. The project in all aspects is designed to provide for the preservation of the natural conditions while providing consideration to improvement of energy efficiency, noise remediation, landscape, drainage, water and air quality on the property and inclusive of the surrounding of the properties.

The non-contributing addition is designed to provide concrete walls and/or fences as required and practical to protect the privacy of the property and neighboring residents. Parking for the Contributing Residence and non-contributing addition is provided on the property in an enclosed garage and drive. The Contributing Residence and non-contributing addition project is designed to provide visual compatibility and acoustical privacy for all neighboring residents and passersby.

The project is designed to meet or exceed all of the City's setback and buffering requirements with respect to the property's residential use and is furthermore intended to provide sufficient distances to ensure reasonable visual and acoustical privacy between neighboring properties. Approvals as requested are in harmony with the existing code and other parties and properties to which have sought and secured approvals sanctioned and approved by the City and the City Historical Committee in the immediate area. Additionally, the project as proposed will result in substantially greater real estate value benefit for the neighboring properties and it's owners.

Architectural Style of New Addition: [see plans and 3d models in package]

The New Addition respects the architectural expression of (812) Contributing Residence character, is stylistic similar and in harmony with, but is designed to be visually distinguishable from the Contributing residence pursuant to the Secretary's Standards, inclusive of Section 67.7c.

The New Addition does incorporate its design cues from the Contributing residence but does not copy or unify them.

Building materials are in the same color range, the window and doors have been sized and aligned pursuant to the same rhythm to provide a harmony relative to the Contributing residence. Roofline, bands and brow visual perceptions are also consistent with, but do copy Contributing residence.

West Elevation, (Lakeside Drive view): (see Exhibit "D" in package)

Non-contributing addition will be located over fifty feet (50'+) east and to the rear of Contributing Residence, disallowing primary view of non-contributing addition due to obstruction of Contributing Residence relative to "line of sight" in most vantage points.

In accordance with the Technical Preservation Standards, Standard 1; the new non-contributing addition is located on the property where its visibility from primary views of the Historic Contributing Residence is at worst minimized and at best totally obscured, dependent upon location.

A passerby traveling by car or by foot from South to North on Lakeside Drive would have an unobstructed and full view of historic Contributing Residence, (form/envelope) and would not have primary view of non-contributing addition. Traveling North on Lakeside Drive from the South of 812 S. Lakeside Drive, a passersby view of non-contributing addition would be fully obstructed by the mass and scale of the residence located at 818 S. Lakeside Drive, which is located (+/-10'-0'') South of Contributing Residence.

A passerby at center of (812) would have full view of Contributing but obstructed view of non-contributing addition until passerby was at North end of the property, passerby then would have ability of full view of Contributing Residence and a partial secondary view of non-contributing addition.

A passerby traveling by car or walking from North to South, would reverse of (South to North); unobstructed and full continuous view of Contributing Residence and a partial, secondary view of the non-contributing addition at North property drive and obscured view from then traveling South.

East Elevation:

East elevation of the non-contributing addition can be viewed from property backyard and Intracoastal water way.

East elevation incorporates a balance of French doors, fixed glass, and operable casement windows. East optical view incorporates architectural material and character of West elevation.

South Elevation:

South elevation of the non-contributing addition can be viewed from 818 South Lakeside Drive, back yards to the South and intra-coastal waterway.

South elevation incorporates a balance of fixed glass and operable casement windows. South elevation architectural material and is harmonious and in character.

North Elevation:

North elevation of the non-contributing addition can be viewed from 810 S. Lakeside Drive and back yards to the North and intra-coastal water way.

North elevation incorporates a balance of fixed glass and operable casement windows, architectural materials and is harmonious and in character.

Landscape [812]:

Native plants play a very important role in our ecosystems. Ecologists, wildlife biologists and entomologist have shown that native plant species are more favorable for supporting pollinators and local wildlife, including insects such as bees, butterflies, amphibians, reptiles and mammals. We have many beautiful options for the Marino project and we choose the eco friendly path relative to planting native ground covers, perennials, shrubs, bedding plants and trees.

The Marino Project Landscape will include Florida native drought resistant and low maintenance landscape. Landscape will be integrated and balanced for natural adaptability in the front of Contributing Residence, Courtyard and rear of non-contributing residence and surrounding property, Landscape to include:

Perennials; [Whirling butterflies, Tampa verbena, Blue porterweed, Pennyroyal],
Annuals & Bedding plants; [Indian blanke, Sunflower, Butter daisy, Moss rose],
Shrubs & Hedges; [Scarlet milkweed, Cosmos, Dwarf crown-of-thorns, Chinese juniper],
Flowering & Shade Trees; [Satinleaf, Fern tree, Fried egg tree, Jacaranda],
Palms, Cycads; [Washingtonia, Silver palm, Pygmy date palm, Sierra Madre palm Cyad],
Ornamental Grasses; [Pink muhly grass, hairgrass, Blue muhly grass, Palm grass],
Groundcovers; [Bromeliad, White begonia, Lemongrass, Guzmania].

Speculative View Consideration:

Relative to West elevation and with no consideration to obstruction of "line of sight" in regard to (addition setback location on property) and/or (Contributing Residence line of sight obstruction) and/or (818 or 810 South Lakeside Drive line of sight obstruction) and in consideration of solely the individual architectural stylistic harmony of west elevation of Contributing Residence and non-contributing addition:

Speculative Elevation View Summary as follows:

- West elevation of Contributing Residence exhibits straight and well-defined horizontal lines as in similar character of the non-contributing addition with intended lesser expression and emphasis.
- Contributing Residence and non-contributing addition incorporate flat roof construction and similar flashing and design.
- Contributing Residence exhibits smooth stucco and paint exterior and similarly non-contributing addition incorporates a (smooth stucco / light stucco mixture) and paint exterior.
- Contributing Residence expresses stepped cantilever eyebrows and incorporates (2'-0'') overhang, as a stylistic similarly, non-contributing addition exhibits cantilever eyebrows that are not stepped and incorporate a (1'-0'') overhang, less defined and are harmonious with Contributing Residence.
- Color of Contributing Residence and non-contributing addition will be similar; Contributing Residence is at present white and will exhibit periwinkle blue eyebrows.

  Non-contributing addition color will be periwinkle blue and white eyebrows as to abide by the Standard to be "visually distinguishable".
- Operable windows in Contributing Residence are casement (non hurricane approved). Operable windows in non-contributing addition will be casement (hurricane approved).
- Fixed windows in Contributing Residence are rectangular, rectangular sloped bay and round, (non hurricane approved).

  Fixed windows in non-contributing addition are rectangular and round, (hurricane approved).
- Windows in non-contributing addition are stylistic similar and complimentary to Contributing Residence window and mullion design but do not copy the mullion design elements.

- Contributing Residence entry door is French style glazed, (non hurricane approved). Non-contributing addition entry door is double door French style glazed, (hurricane approved).
- Curved wall at Contributing Residence entry is stylistic similar and represented at non-contributing addition by double entry curved wall.
- Garage doors both at Contributing Residence and non-contributing addition are non ornate (solid flush panel), Moderne.
- Breezeway connecting Contributing Residence and non-contributing addition is in harmony and visually compatible with both buildings.

Rational Analyses (812): (Contributing / Non-Contributing buildings)

- Both Contributing and non-contributing residences incorporate similar concrete construction and stucco exterior walls.
- Both Contributing and non-contributing residences have flat roofs.
- Both Contributing and non-contributing residences incorporate raised stucco banding, clean straight lines and cantilever eyebrows.
- Both Contributing and non-contributing residences incorporate operable casement windows.
- Both Contributing and non-contributing residences incorporate fixed rectangle glass windows.
- Both Contributing and non-contributing residences incorporate round fixed glass windows.
- Both Contributing and non-contributing residences incorporate French glass doors at entry.
- Both Contributing and non-contributing residences incorporate curved walls at entry.
- Primary and secondary views of non-contributing addition are in harmony and balance with Contributing Residence.

Resources:

- The Secretary of the Interior's Standards for Rehabilitation and Guidelines for Rehabilitating Historic Buildings.
- Guiding Additions to Historic Properties: A Study of Design Guidelines for Additions in Sixty-Five American Cities, University of Pennsylvania
- National Park Service, Secretary of the Interior's Standards for Rehabilitation (36 CFR Part 67, as amended through 2000).
- City of Lake Worth Historical Preservation Ordinance, Section 23.5-4
- City Of Lake Worth Department for Community Sustainability Planning, Zoning and Historic Preservation Division, Minutes, Memorandums, Correspondence
- Guidelines for Rehabilitating Historic Buildings
- Historic Preservation Tax Incentives Program; New Additions to Historic Buildings
- Sustainability for Rehabilitation of Historic Buildings
- Interpreting the Standards Bulletins and Preservation Brief 14: New Exterior Additions to Historic Buildings: Preservation Concerns
- Delray Beach Historic Preservation Design Guidelines
- SECTION IV. Prevalent Styles of Architecture, City of Delray
- Pennsylvania Historical and Museum Commission
- Repairs, Remodeling, Additions, and Retrofitting – FEMA
- "The Real Deal", 01/29/16, Article
- Images of America, Art Deco of the Palm Beaches, Sharon Koskoff
- Site and Elevations plans, 812 South Lakeside Drive
- Antique Home; Moderne and Art Deco Architecture of the 20th Century
- Recent past revealed, architectural style guide

EXHIBIT "B"

Page 1

HISTORICAL STRUCTURE FORM

FLORIDA MASTER SITE FILE

Version 3.0 11/96

Consult Guide To Historical Structure Forms for detailed instructions.

Site #8 PB9649
Recorder # 10
Field Date 4/24/98
Form Date 8/2/98

[X] Original
[ ] Update
(give site #)

Site Name(s) (address if none) 812 South Lakeside Drive
Multiple Listing [DHR only] ____
Survey # ____
Survey Lake Worth Phase III Survey
National Register Category (Please check one: consult with Site File before using last four): [X] building [ ] structure [ ] district [ ] site [ ] object

LOCATION & IDENTIFICATION

Address (Include N,S,E,W;#;St.,Ave.,etc.) 812 South Lakeside Drive
Cross Streets (nearest/between) between South 8th and 9th Avenues
City/Town (within 3 miles) Lake Worth
In Current City Limits: [X] y [ ] n [ ] unknown
County Palm Beach
Tax Parcel #(s) 38-43-44-27-01-024-0050
Subdivision name Addition No. 1 to Town of Lake Worth
Block 24
Lot 5
Ownership (Please check one): [ ] private-profit [X] private-individual [ ] city [ ] county [ ] Native American [ ] private-nonprofit [ ] private-unspecified [ ] state [ ] federal [ ] foreign [ ] unknown

Name of Public Tract (e.g., park) ____
Route to (especially if no street address) ____

MAPPING

USGS 7.5' Map Name & Date Lake Worth, Fla. 1945, PR 1983
Township 44S Range 43 E Section 27 1/4 section: [ ] NW [X] SW [ ] SE [ ] NE [ ] Irregular-name: ____
Landgrant ____
UTM: Zone [ ] 16 [X] 17 Easting 594520 Northing 2942840
Plat or other map (map's name, location) ____

DESCRIPTION

Style* Art Moderne
Exterior Plan* irregular
Number of Stories 2
Structural System(s)* concrete block
Foundation: Type(s)* continuous
Material(s)* concrete
Exterior Fabric(s)* stucco
Roof: Type(s)* flat
Material(s)* built-up
Roof secondary strucs. (dormers etc.)* ____
Chimney: No ____ Material(s)* ____ Location(s)* ____
Windows (types, materials, etc.)* casement, metal, 4; fixed, metal, 1 (above casements); fixed, metal, 1, 3, and 4; glass block; awning, metal, 2, 4; SHS, metal, 2/2; casement, wood, 3; angled out "bay" window in front facade; jalousie, metal, mul
Main Entrance (stylistic details) full-glazed wood door
Porches: #open ____ #closed ____ #incised ____ Location(s) ____
Porch roof type(s) ____
Exterior Ornament deeply scored walls around circle (picture) window; wide eaves; concrete eyebrow ledge above second story windows; scored upper story walls
Interior Plan* unknown
Condition (Please check one): [X] excellent [ ] good [ ] fair [ ] deteriorated [ ] ruinous
Surroundings (N=None, S=Some, M=Most, A=All/nearly all): ___ commercial A residential ___ institutional ___ undeveloped
Ancillary Features (No., type of outbuildings; major landscape features. Use continuation sheet for descriptions of interior, landscaping, etc) nonhistoric flat-roofed carport; concrete block halfwall on south property boundary

Archaeological Remains None Observed
[ ] Check if Archaeological Form completed

*Consult Guide to Historical Structure Forms for preferred descriptions (coded fields at the Site File).

DHR USE ONLY**********OFFICIAL EVALUATIONS**********DHR USE ONLY

NR DATE
KEEPER-NR ELIGIBILITY [ ] yes [ ] no Date ____
SHPO-NR ELIGIBILITY: [ ] yes [ ] no [ ] potentially elig [ ] insufficient info Date ____
DELIST DATE
LOCAL DESIGNATION: ____ Date ____
Local office
National Register Criteria for Evaluation [ ] a [ ] b [ ] c [ ] d (See National Register Bulletin 15, p.2)

HISTORICAL STRUCTURE FORM

Site # 8 PB9649

Consult Guide to Historical Structure Forms for detailed instructions

HISTORY

Construction date: Exactly 1942 (year) Approximately _____ (year) Earlier than _____ (year) Later than _____ (year)

Architect (last name first): _____ Builder (last name first) Akerman, Samuel

Moves: ☐ yes ☒ no ☐ unknown Date _____ Original address _____

Alterations: ☒ yes ☐ no ☐ unknown Date c 1970 Nature* replaced windows

Additions: ☒ yes ☐ no ☐ unknown Date unknown Nature* shed-roofed, partial width rear addition

Original Use* (give date ranges) residential

Intermediate Uses* (give date ranges) residential

Present Use* (give date ranges) residential

Ownership History (especially original owner, dates, profession, etc.) Samuel Akerman (1950); Willie & Paula Termont (1992)

*Consult Guide to Historical Structure Forms for preferred descriptions (coded fields at the Site File).

RESEARCH METHODS (Check all choices that apply; if needed write others at bottom)

- ☐ formal archaeological survey
- ☐ informal archaeological inspection
- ☐ Public Lands Survey (DEP)
- ☐ tax records/property deeds
- ☒ tax records only
- ☐ interior inspection
- ☒ other methods (specify) City Directories
- ☒ past surveys search at FMSF
- ☒ past sites search at FMSF
- ☐ FL Archives (Gray Building)
- ☐ FL Photo Archives (Gray Building)
- ☐ occupant/owner interview
- ☐ neighbor interview
- ☒ local library research
- ☐ non-local library research
- ☒ building permits
- ☐ demolition permits
- ☐ commercial permits
- ☐ occupation permits
- ☒ Sanborn maps
- ☐ subdivision maps
- ☐ plat maps
- ☐ local newspaper files

SURVEYOR'S EVALUATION OF SITE (Check one choice on each line)

Potentially eligible for local register?	☐ yes: name register at right	☒ no	☐ insufficient info	Name of local register if eligible: _____
Individually eligible for National Register?	☐ yes	☒ no	☐ insufficient info	
Potential contributor to Nat. Reg. district?	☒ yes	☐ no	☐ insufficient info	

Area(s) of Historical Significance (See National Register Bulletin 15, p. 8 for categories: e.g. "architecture," "ethnic heritage," "community planning & development," etc.)

Community Planning + Development, Architecture

Explanation of Evaluation (required, whether positive or not; limit to three lines; attach longer statement, if needed, on separate sheet)

This building was designed by Samuel Akerman, a building contractor, for H.A. Medholt in 1942. Akerman, the building inspector in 1944, resided in the building by 1950. Because of its distinctive architectural styling, this building would be contributing to a district.

DOCUMENTATION (Photos, Plans, etc.)

Bibliographic References (Use Continuation Sheet, give FMSF Manuscript # if relevant) Palm Beach County Property Appraiser's Office; Polk's City Directories 1940-52; Building Permit file, City of Lake Worth (original drawings on file); Sanborn Fire Maps 1928 (corrected to 1949).

Photographs (required) B&W print(s) at least 3x5, at least one main facade.

Location of negatives & negative numbers City of Lake Worth

RECORDER

Name (last name first)/Address/Phone/Fax/Email/Affiliatio Anderson, Sherry/Archaeological Consultants, Inc. (ACI)/ P.O. Box 5103, Sarasota, FL 34277-5103/(941)925-9906/(941)925-9767/ACIMAIN@COMPUSERVE.COM

Remember: Use a Supplement for Site Forms or other continuation sheet for descriptions that do not fit in the spaces above.

REQUIRED:
(1) USGS 7.5' MAP WITH STRUCTURE PINPOINTED IN RED
(2) LARGE SCALE STREET OR PLAT MAP
(3) PHOTO OF MAIN FACADE, PREFER B&W, AT LEAST 3x5

HISTORICAL STRUCTURE FORM

Site #8 PB9649

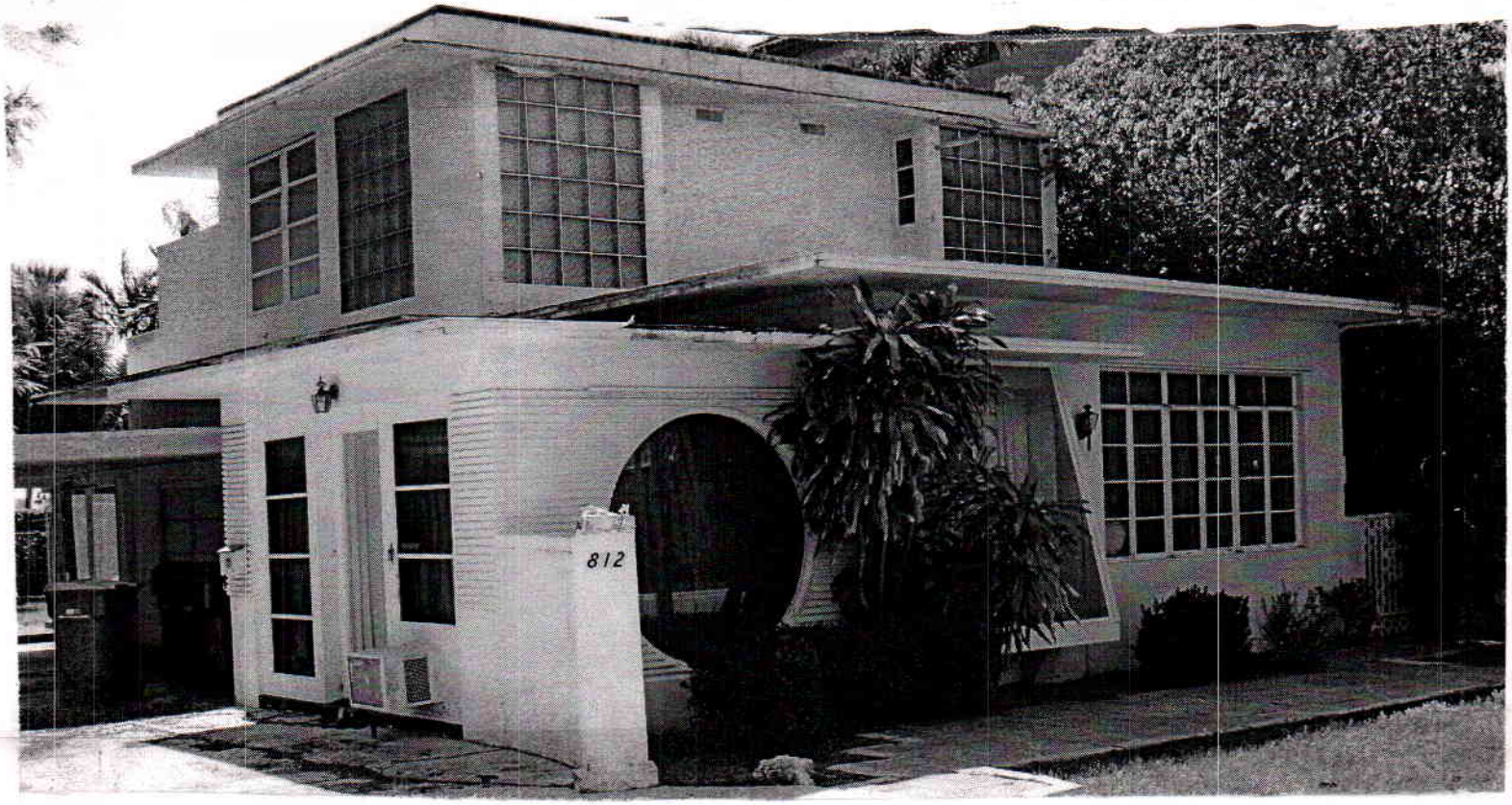

STREET OR PLAT MAP

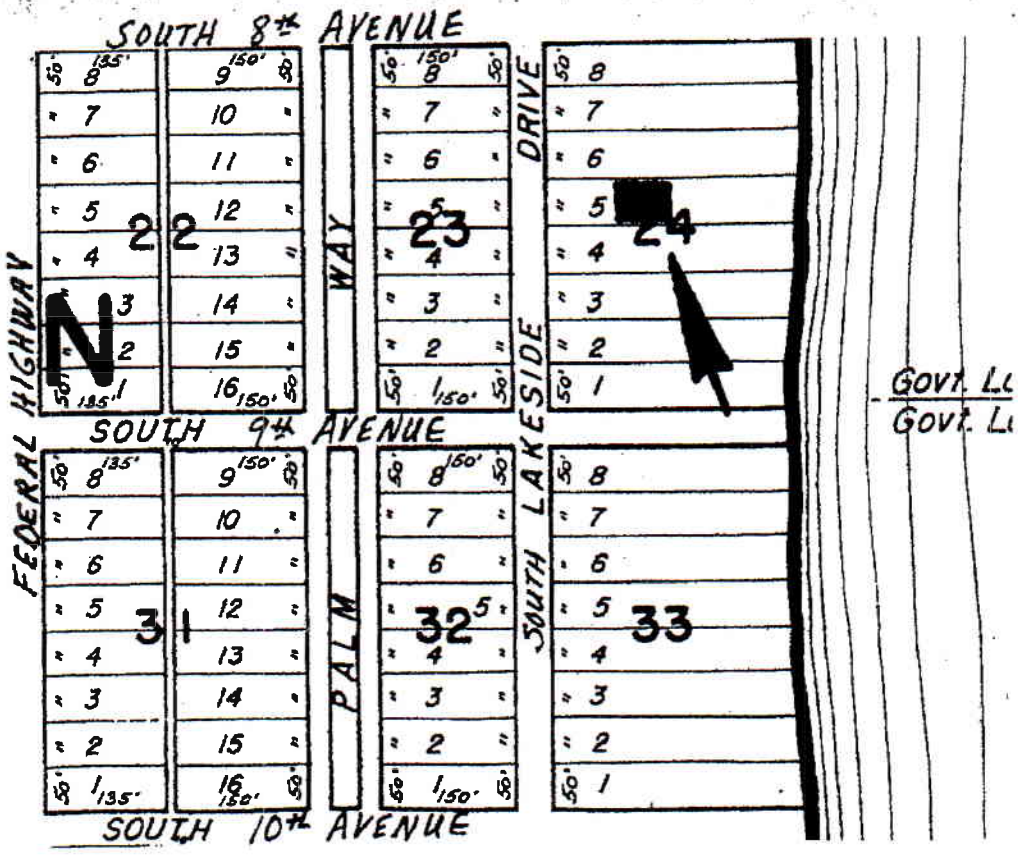

HISTORICAL STRUCTURE FORM

Site #8 PB9649

USGS MAP

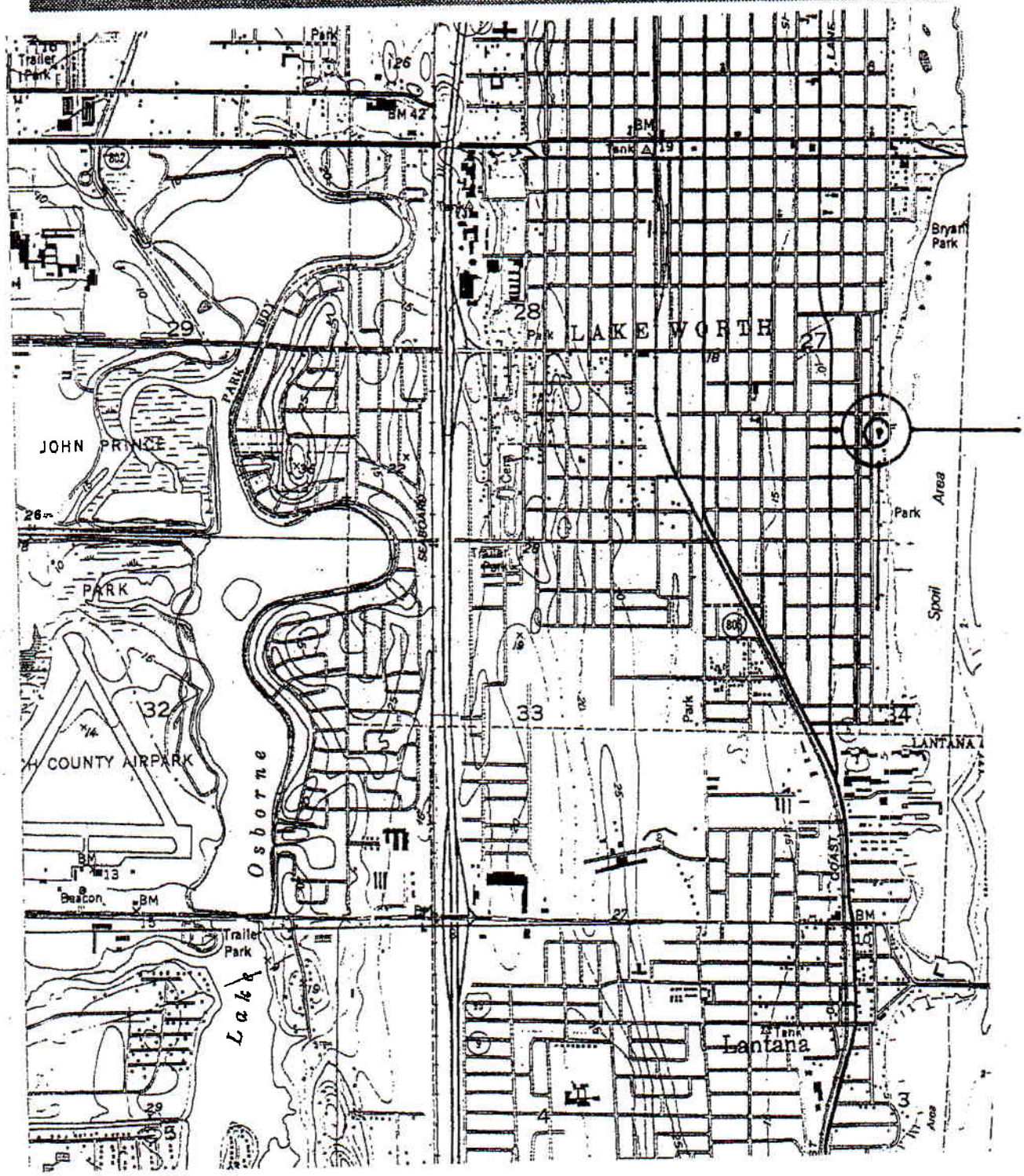

Lake Worth, Fla. 1945 PR 1983

SCALE 1:24 000

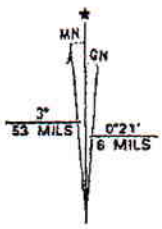

UTM GRID AND 1988 MAGNETIC NORTH DECLINATION AT CENTER OF SHEET

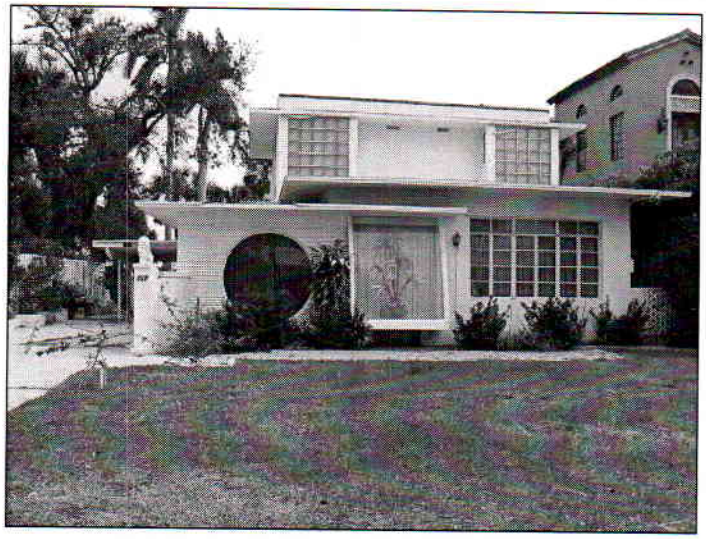

Front View

Rear View

Street View

Private Boat Dock

Intracoastal View

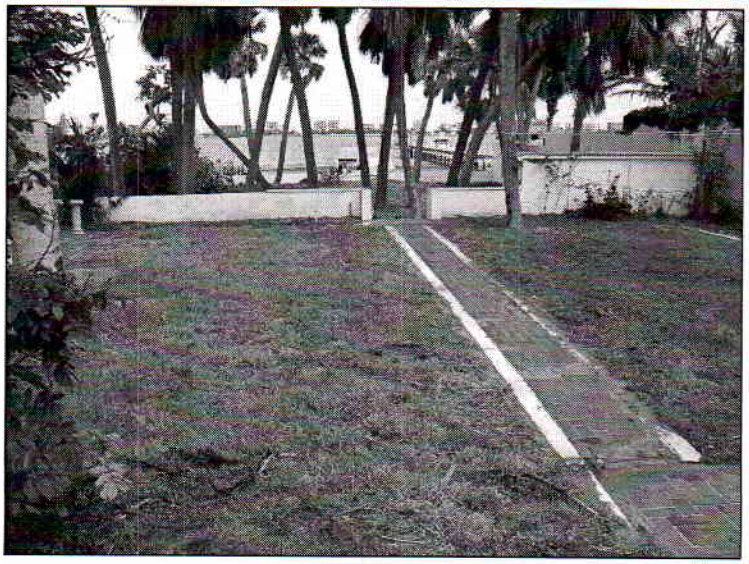

Back Yard

Designed by United Systems Software Company (800) 969-8727

WEST VIEW

822, 818, 812, 810, 806 South Lakeside Drive

North West View Lakeside Drive

South West View Lakeside Drive

Property History for 810 and 812 South Lakeside Drive	
1942 / 1943	Medholdt Properties was designed by Edgar S. Wortman. Apparently H.A. Medholt was the owner and S.H. Ackerman was the contractor
810 & 812	Plan shows 810 (lot 6) as the 1 story 'Guest House' and the 812 (Lot 5) side with Rumpus Room and Garage
	A single drive from the street leads to a turning circle. A 'fish pond' is on axis.
	Both structures are one story
	It's unclear when construction began
1942, April 6	
810	Another plan of 810 has minor revisions to the floor plan including: - Front entrance from south side to east side of 'Porch' - Modified/created Kitchen, Bath and Bedroom Note: Still one story
1943, Dec. 4	
810 & 812	1942 Plan approved by the Zoning Board of Appeals (?) 'for setbacks' with John Adair signing plus three others. Apparently S.H.Ackerman drew this plan.
No Date	
812	Another plan shows Rumpus Room and Garage elevations (north, east, and west) for the Medholdt Property. It is still a single story.
1945, Oct. 17	
812	A building permit is issued for 810 (Lot 5) to Medholdt & Ackerman for a new 2 story residence. (Plan is labeled 810 but is it actually 812)
1946, June	
812	Lake Worth property record incorrectly shows 814-816 Lot 5 (actually 812, Lot 5) as a 2 story single family residence. A single line sketch is on the property record.
1957, August	
810	2 sheets of drawings for 810 to add a 2nd Floor. These drawings probably were done for the separation of the 2 houses. 812 does not appear on the plans.
1957, Sept. 10	
810	Letter to Marvin Devos: From the city for the division of Lots 5 & 6 for property owned by Ackerman. Lot 6 (810) receives waiver for a 45' front yard setback in lieu of 50' requirement.
1957, Dec. 9	
	Letter to Sam Ackerman – re: Lots 5 & 6 waived 50' setback, 10' north to 5'; 1400 S.F. minimum requirement to build plans approved on Dec. 4, 1943 by Robert Small, Secretary of the Zoning Board of Appeals

[EXHIBIT "C"]

Florida Green Building Coalition (FGBC)

Marino Residence, [new addition: 812 South Lakeside Drive]

Project Narrative:

The Marino non-contributing two-story addition project will be constructed with Florida Green Building guidelines in mind, utilizing sustainable energy efficient construction, conservation treatment methodology.

General Building Energy Efficiency Measures Guidelines:

1. High Efficiency (Energy Star certified), LED Lighting, [Cleanlife or equal]: Average lighting power density for the addition designed to comply or exceed the FGBC Standard Guidelines.
2. Insulation, (Prodex or equal): The U- value for mass walls designed pursuant to green industry building standard for energy efficiency.
3. High Efficiency Structural Glazing: Locally produced, [SAF-GLAS, LLC] Dade # 13-1105.10**],** [U-value for the fenestration from 0.42 to 0.52].
4. Wall Construction: Concrete and Insulation**:** [U-factor = 0.064]
5. Hurricane resistant French Entry and Great Room Doors: [U-factor = 0.580]
6. Hurricane resistant Casement Windows: Locally produced, (PGT, CGI or equal) Insulated Glass hurricane low-E; [U-value = 0.42 to 0.52 SHGC = 0.40 to 0.44]
7. Fixed Windows: Locally produced, (Survivalite or equal) [U-value = 0.42 to 0.52 SHGC = 0.40 to 0.44]
8. Windows strategically placed for natural day lighting.
9. Roof: R-21 built-up roof, [U-factor = 0.043]
10. HVAC: Energy Star (16+) SEER, [Trane, Carrier or equal]
11. Tankless Water heater: Energy Star, [Rinnai, A.O. Smith or equal]
12. Infrastructure installation for future, (30) thin film solar panels generating enough electricity to serve (+/- 60%) of the needs of the home plus return power to the grid.

13. Air venting system, [Fantech or equal], designed to keep the indoor air healthy.
14. Smart irrigation system, [Rachio or equal] that senses environmental conditions and adjusts the amount of water output.
15. Florida native drought resistant landscape.
16. Zero Volatile Organic Paint, [Sherwin Williams or equal].
17. Low VOC sealants and adhesives, [Swiftbond or equal].
18. Minimum use of carpets.
19. Pervious drive, patio and walks.
20. Water conserving Energy Star appliances, [Kohler, Whirlpool or equal].

- The Project will strive to comply with pertinent sections of the City of Lake Worth Sustainable Bonus Incentive Program Section 23.2-33.

Sec. 23.2-33. - City of Lake Worth Sustainable Bonus Incentive Program.

Intent. The City of Lake Worth Sustainable Bonus Incentive Program is intended to implement Objective 1.3.10 of the city comprehensive plan future land use element and provisions therein regarding a community benefits program. This incentive program offers the opportunity to attain an option for increased height, as provided in the comprehensive plan future land use element, or an option for increased intensity (measured by floor area ratio/FAR), or both, within certain zoning districts in exchange for the incorporation of sustainable design features, community based improvements and overall design excellence as part of a development proposal.

Purpose. The purpose of the Sustainable Bonus Incentive Program is to encourage the incorporation of sustainable design and development principles within new development and redevelopment projects to foster a more sustainable, economically vibrant, diverse community with an emphasis on high quality design and appreciation of the city's unique cultural, architectural, historical and natural resources.

Application and review process.

Application. All development proposals seeking the increased height above two (2) stories, or additional FAR, as each may be allowed in a zoning district, shall submit a sustainable bonus incentive application as provided by the department for community sustainability. The application shall accompany the standard City of Lake Worth Development Application for the development proposal. The sustainable bonus incentive application

shall including all of the following:

A project fact sheet with building specifications including the bonus height or bonus intensity proposed. The number of square feet on each story of all proposed buildings that are above the first two (2) stories and the number of square feet that are sought for the bonus floor area ratio shall be specifically delineated.

A summary of each of the proposed on-site and off-site features or improvements, and the market value of each, which are proposed to qualify for the incentive program. See subsection d) for qualifying features and improvements.

If a project is to utilize the LEED certification or Florida Green Building feature, a security or performance bond acceptable to the city must be posted at the time of the permit which is equal to the value of the feature(s), and shall serve as a means to ensure that the certification is granted. Following official certification of the project, the city shall release the security or performance bond. If the project fails to be certified within a reasonable time after the construction of the building, the city shall utilize the security or bond to collect an in-lieu fee as provided in subsection d) below.

Any other additional information to ensure the timely and efficient evaluation of the project by city staff to ensure that the requirements of the incentive program are being met.

2. *Review/decision.* The development review official shall review the application along with the zoning approvals otherwise required of the development proposal under these LDRs. Development applications that require further review or approval by a decisionmaking board shall also include the development review official's recommendation regarding the award of bonus height or intensity (the "incentive award") under the program. Any decision on the incentive award shall be made by the planning and zoning board or the historic resources planning board, as applicable. A decision on an incentive award may be appealed under the procedures applicable to the development application with which it is associated. No waiver or variance may be granted regarding the incentive award. The award of bonus height or intensity under this program shall be based on the following criteria:

Is the award calculated correctly, consistent with the square footage and height requested and the value of the features and

improvements included in the development proposal;

Do the proposed on-site features or improvements adequately provide sustainable project enhancements, beyond those otherwise required by these LDRs for the development proposal, that are attainable and reasonable in the context of the proposed project; and

Do the proposed off-site improvements meet the priorities of the city for community sustainability; and

Do the proposed features, improvements or fees-in lieu meet the intent of the Sustainable Bonus Incentive Program?

Qualifying sustainability features or improvements. The following features or improvements may qualify for the incentive award of either bonus height or intensity, or both. In order to qualify for each incentive award under subsections 1.(d) through 1.(h), the total value of the qualifying features or improvements must equal at least the amount of the fee-in-lieu established by the city commission pursuant to subsection e) below.

1. *On-site features or improvements.*

LEED certification shall entitle the applicant to one hundred (100) percent of the incentive award regardless of the number of additional stories or additional square feet above the initial two (2) stories.

Florida Green Building certification shall entitle the applicant to fifty (50) percent of the incentive award regardless of the number of additional stories or additional square feet above the initial two (2) stories.

Incorporation of a historic building or structure designated on the National Register of Historic Places or listed within the Lake Worth Register of Historic Places shall entitle the applicant to fifty (50) percent of the incentive award regardless of the number of additional stories or additional square feet above the initial two (2) stories.

Higher quality or additional open space beyond the requirements of the code.

Higher quality or additional landscaping beyond the requirements of the code.

Public amenity such as a law enforcement substation, cultural gallery, public plaza, community meeting space, library, or garden.

Public parking garage.

Other project components open to the public, or offering a direct community benefit meeting the intent of the comprehensive plan, which are similar to those listed as part of the USGBC's LEED for neighborhood development program, or which include elements of sustainable design such as:

i. Low impact development and green infrastructure.

ii. Natural resource conservation/sensitive lands protection.

iii. Water conservation measures.

iv. Solid waste and recycling.

v. Floodplain management.

vi. Coastal hazards.

vii. Character and aesthetic excellence.

viii. Urban form and density.

ix. Historic preservation.

x.Transit oriented development.

xi. Complete streets.

xii. Bicycle mobility systems.

xiii. Pedestrian mobility systems.

xiv. Public transit.

xv. Public parking.

xvi. Affordable housing.

xvii. Community health and safety.

xviii. Housing diversity and accessibility.

xix. Food production and security.

xx. Renewable energy.

xxi. Energy efficiency and conservation.

xxii. Noise reduction.

xxiii. Lighting mitigation (night sky).

xxiv. Vista or viewshed preservation and protection.

- Project guidelines consideration pursuant to the Florida Green Standard, Version 10.

Florida Green Home Standard

Version 10

Instructions

Effective October 1, 2013

Revised 3-11-16

FOR NEW HOMES

Each home must comply with the three prerequisites in order to be eligible for certification.
Select items to obtain the minimum number of points listed for each category (category minimums).
(The sum of the minimums totals 80 points.) Accumulate at least an additional 20 points of your cho
the required 100 TOTAL* to qualify for the program.

- If any category minimums cannot be achieved, point deficiencies may be added to the total mi
- score of 100, creating an "adjusted project minimum required points" (the points YOUR projec
- for certification). (Example: Applicant elects to achieve only 10 points from a category with a m
- Project may still qualify if: total points equal or exceed 100 + [15-10] = 105.)

IMPORTANT GUIDELINES:

1. The FGBC Home Standard Version in effect when the home is permitted is the checklist that must
version if available and applicable. Any application submitted using a previous version of the standa
2. Checklists and supporting documentation must be submitted by an Active FGBC Certifying Agent (
3. If this Excel file is altered in any way, the application will not be accepted. Altered files will be r
to the submitter.
4. Duing the review process, the project evaluator may request additional information and/or copie
submittals" indicated in the Reference Guide to verify that the project has achieved the credit point.

FGBC CERTIFICATION LEVELS

The FGBC Green Home Certification program uses a tiered rating system. Certification is awarded at
according to points achieved over the minimum point threshold.

Bronze	0-30 points over the project's required minimum
Silver	31-60 points over the project's required minimum
Gold	61-90 points over the project's required minimum
Platinum	91 + points over the project's required minimum

Florida Green Home Designation Standard

1. GENERAL PROVISIONS Purpose

The provisions of this document are intended to establish a voluntary, statewide standard for Green Home Certification. This enhances the goal of achieving uniform and meaningful green building designations for residential buildings in Florida.

Scope

These standards apply to

Single-family and multi-family residential units less than four (4) stories New construction and existing buildings Homes considered a dwelling unit by the Florida Building Code Structures that comply with local zoning ordinances

2. OPERATING PRINCIPLES

a. Qualification shall be achieved by attaining at least 100 Credit Points, gained through incorporating green construction techniques and products into the home so that it benefits the environment and supports a more sustainable Florida.

b. A list of qualifying improvement features and their respective Credit Points (referred to as the "Checklist") shall be maintained by the Florida Green Building Coalition such that the Credit Point list may be modified, to include advancements in technologies, through a regular technical and public review and acceptance process that is defined by this Standard.

c. The Checklist shall be organized into categories, such as energy, water, site, health, materials, disaster mitigation, etc. Each category has both a minimum Credit Point requirement and a maximum number of allowable Credit Points to increase diversity.

d. All new homes with a permit date more than 36 months from submittal date, must use the current version of the Standard in effect at the time the final application is submitted.

e. Any home that has not been occupied for any reason shall comply with the “NEW” home certification requirements.

f. Any home that has been occupied for any reason shall comply with the “EXISTING” home certification requirements.

g. All model homes shall comply with the “NEW” home certification requirements.

h.A Final Application submitted using a previous version of the Standard is subject to the fee

structure stated in the current version of the Standard in effect at the time the Final Application is submitted.

Certification of NEW homes

1. Each home must comply with the prerequisites in order to be eligible for certification.
2. Each home must select items from the Checklist to obtain the minimum number of points listed for each category (category minimum), the sum of which is 80 points.
3. Each home must accumulate at least an additional 20 points to obtain the required 100 points to qualify for certification.
4. If any category minimums cannot be achieved, point deficiencies may be added to the total minimum required score of 100, creating an "adjusted minimum required points."
5. All documentation must be submitted within 120 days of the Certificate of Occupancy for new home construction or the home will be required to submit under the Standard version in effect at the date of submittal.
6. Single Family Home submittals shall be submitted electronically (preferred) or mailed to the Florida Green Building Coalition. The submittal shall include at a minimum the completed checklist in the official electronic format, application, and required documentation. Additional information regarding submittals may be found in the Checklist.

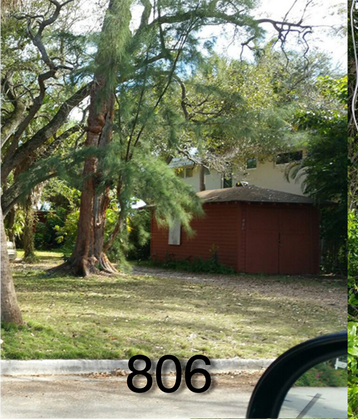
806

810

812

818

822

⌊EXHIBIT "D"⌋

COLORS IN PICTURE,
FOR DEFINTION CLARITY ONLY;
TRUE COLOR AS RECITED IN EXHIBIT “A” ATTACHED

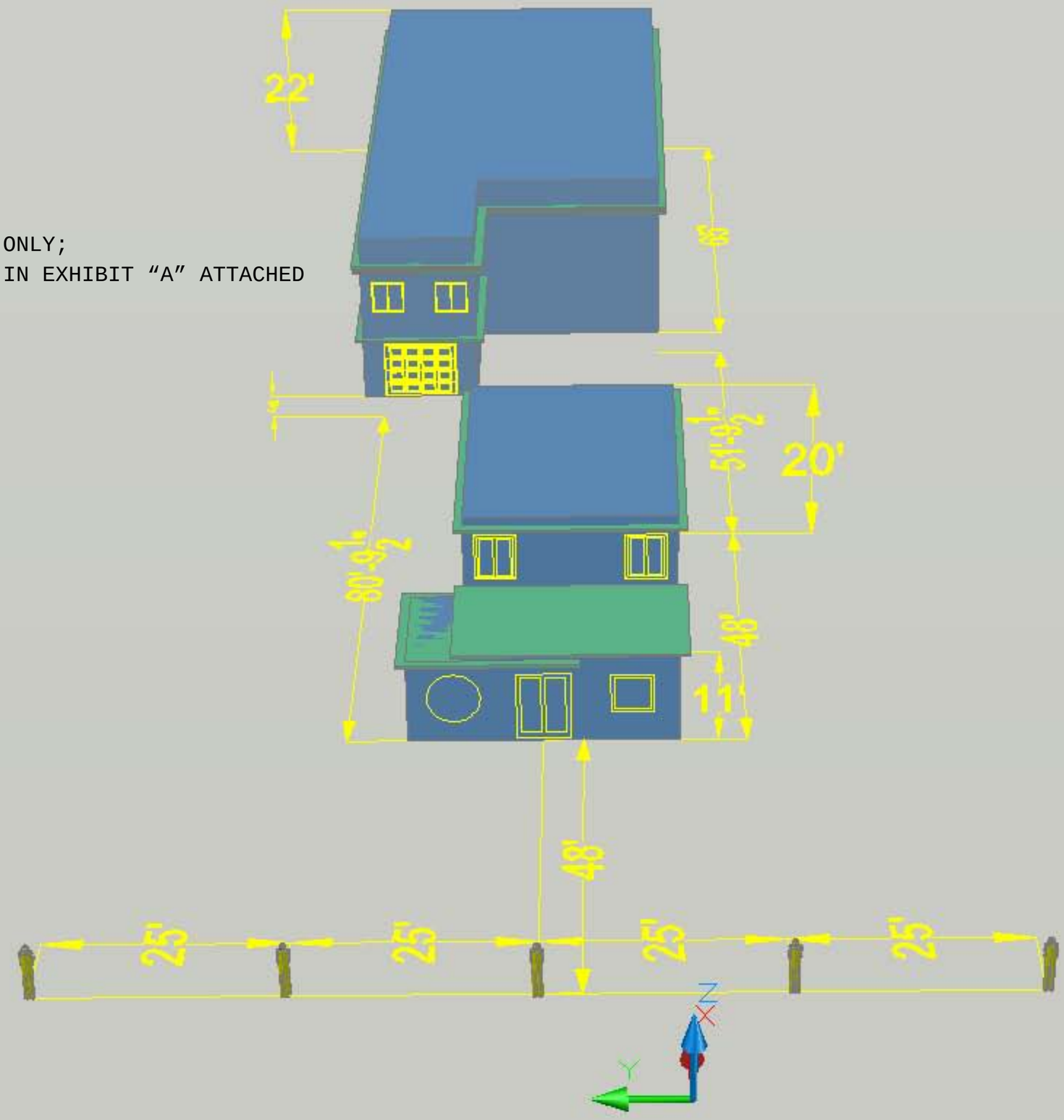

22'
53'
20'
48'
11'
48'
25'
25'
25'
25'
S Lakeside Dr

22'
3'
88'-9½"
11'
48'
25'
25'
25'
25'
S Lakeside Dr

22'
3'
81'-9½"
11'
48'
25'
25'
25'
25'
S Lakeside Dr

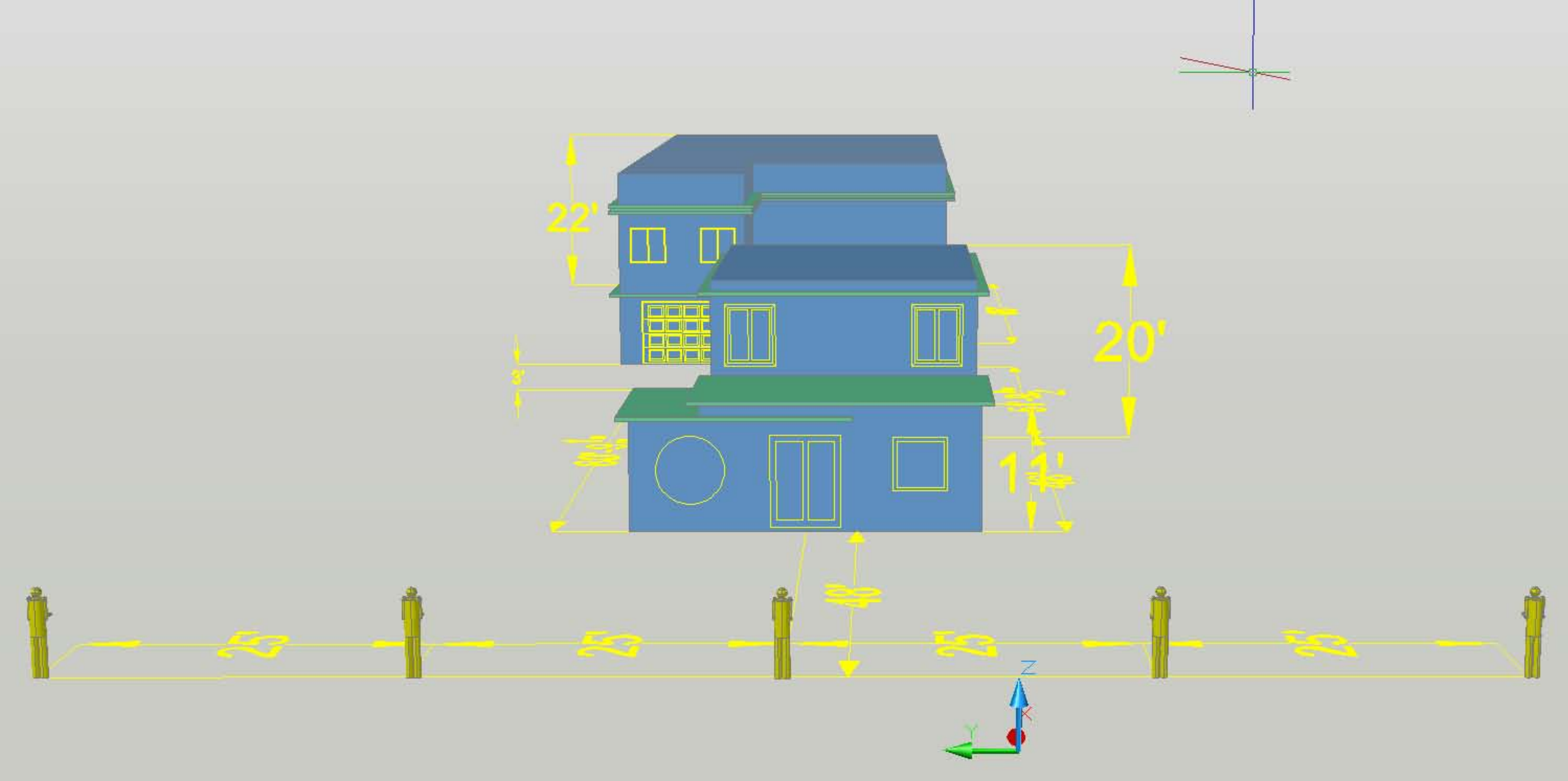
22'
20'
3'
11'
Z
X
Y

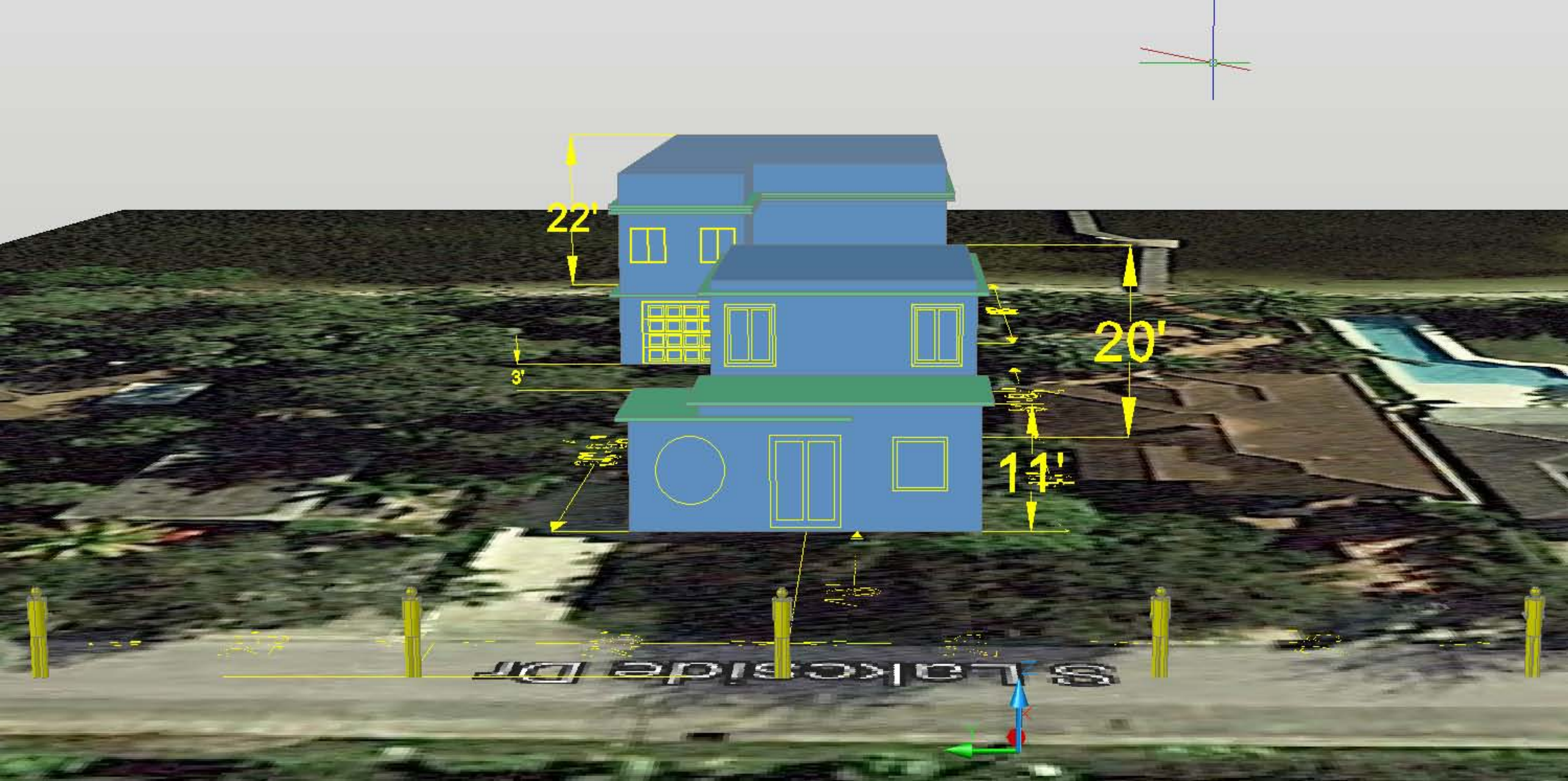
22'
20'
3'
11'
8 Lakeside Dr

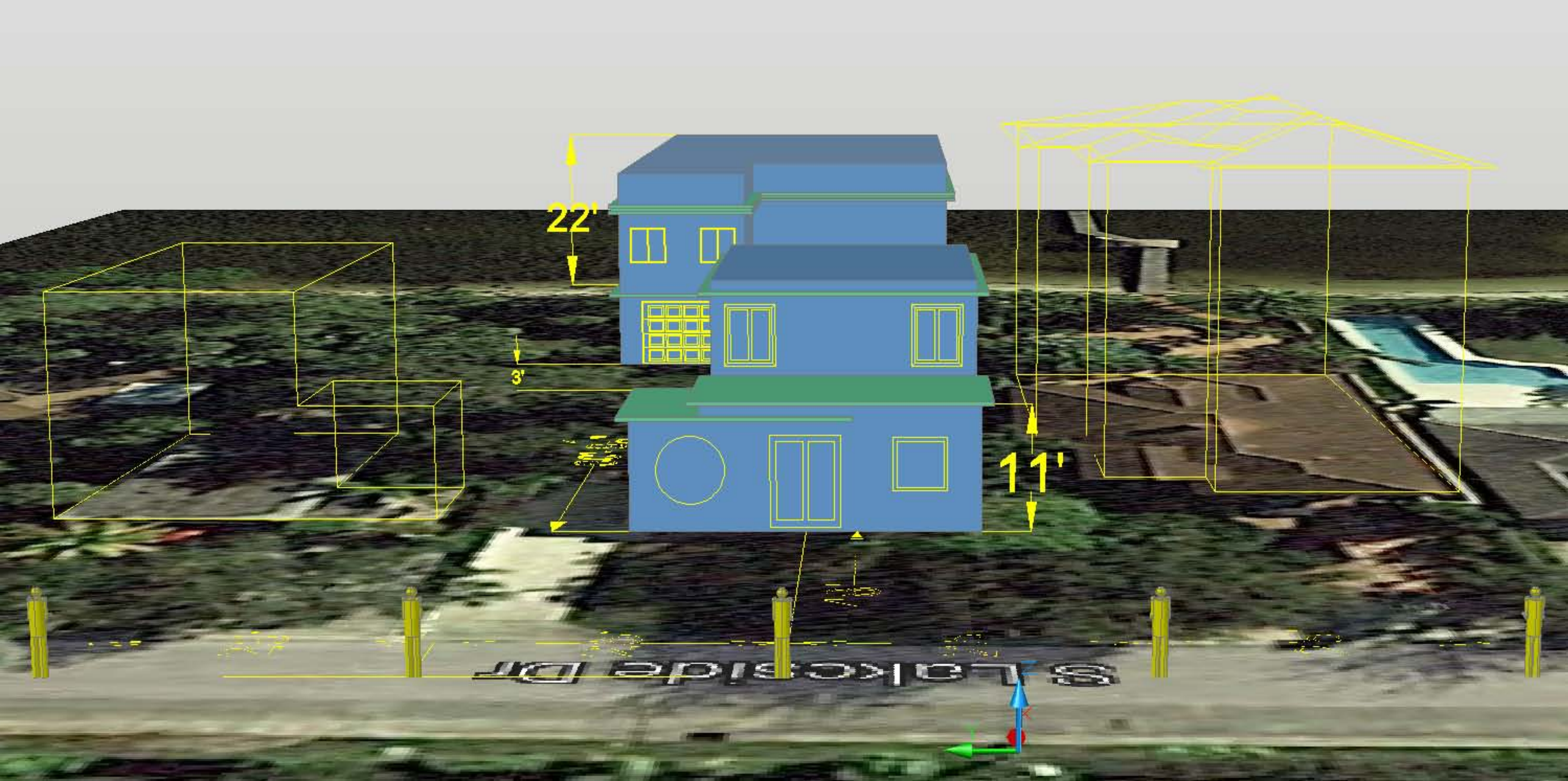
22'
3'
11'
8 Lakeside Dr

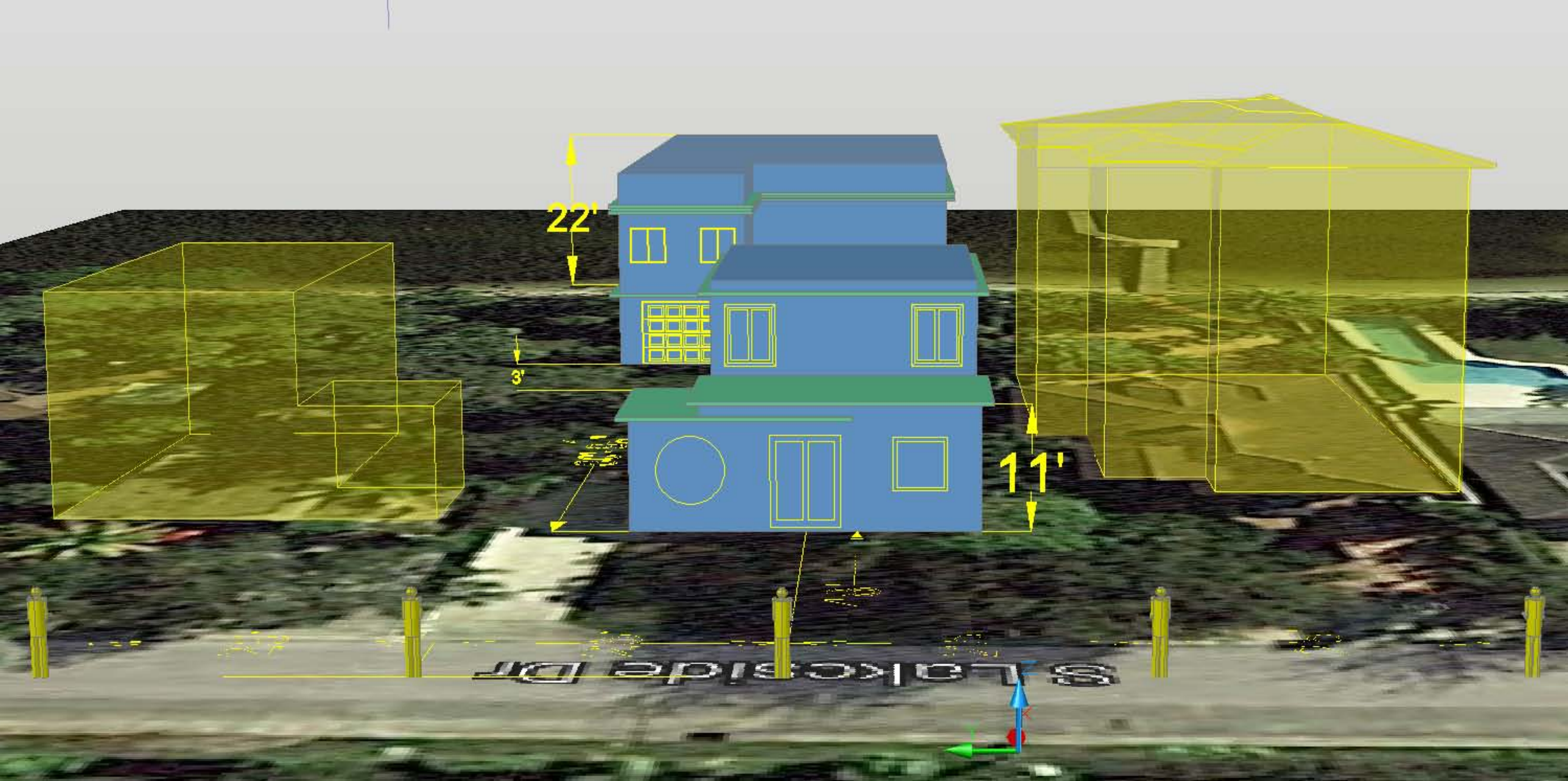
22'
3'
11'
8 Lakeside Dr

22'
3'
11'
BACK
LEFT
WCS

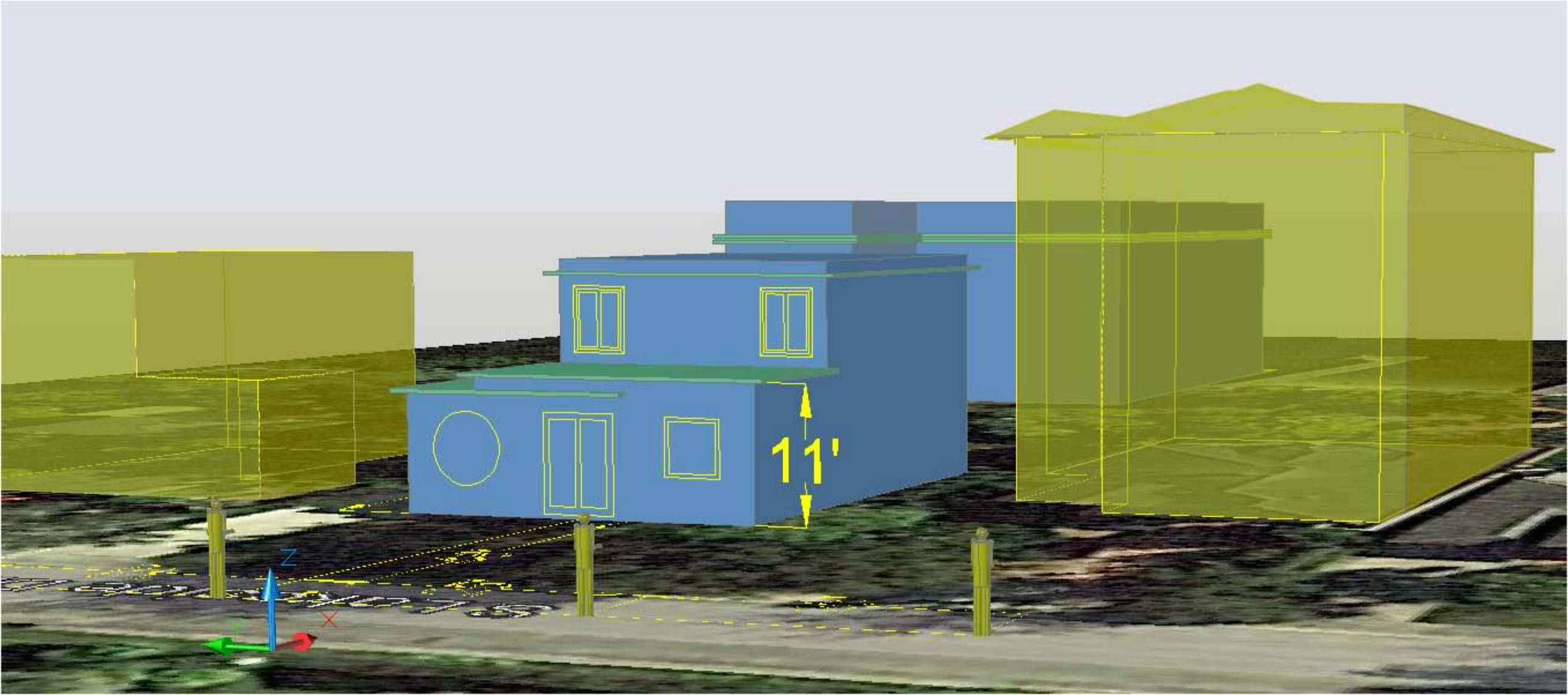
11'
Z
X

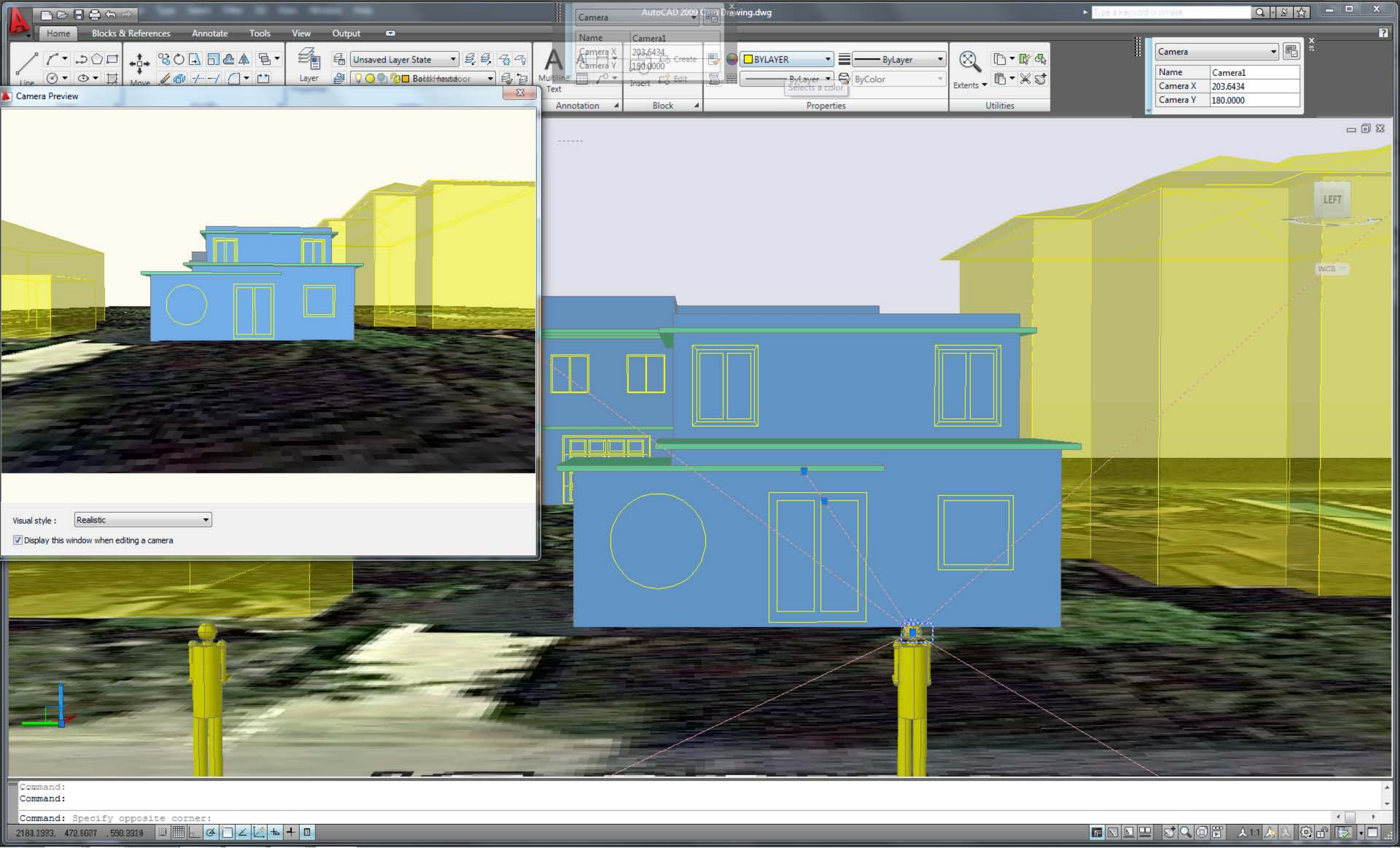
AutoCAD 2009 Open Drawing.dwg
Home
Blocks & References
Annotate
Tools
View
Output
Camera
Name
Camera1
Camera X
203.6434
Camera Y
180.0000
Unsaved Layer State
BYLAYER
ByLayer
ByColor
Annotation
Block
Properties
Utilities
Camera Preview
Visual style :
Realistic
Display this window when editing a camera
LEFT
WCS
Command:
Command:
Command: Specify opposite corner:

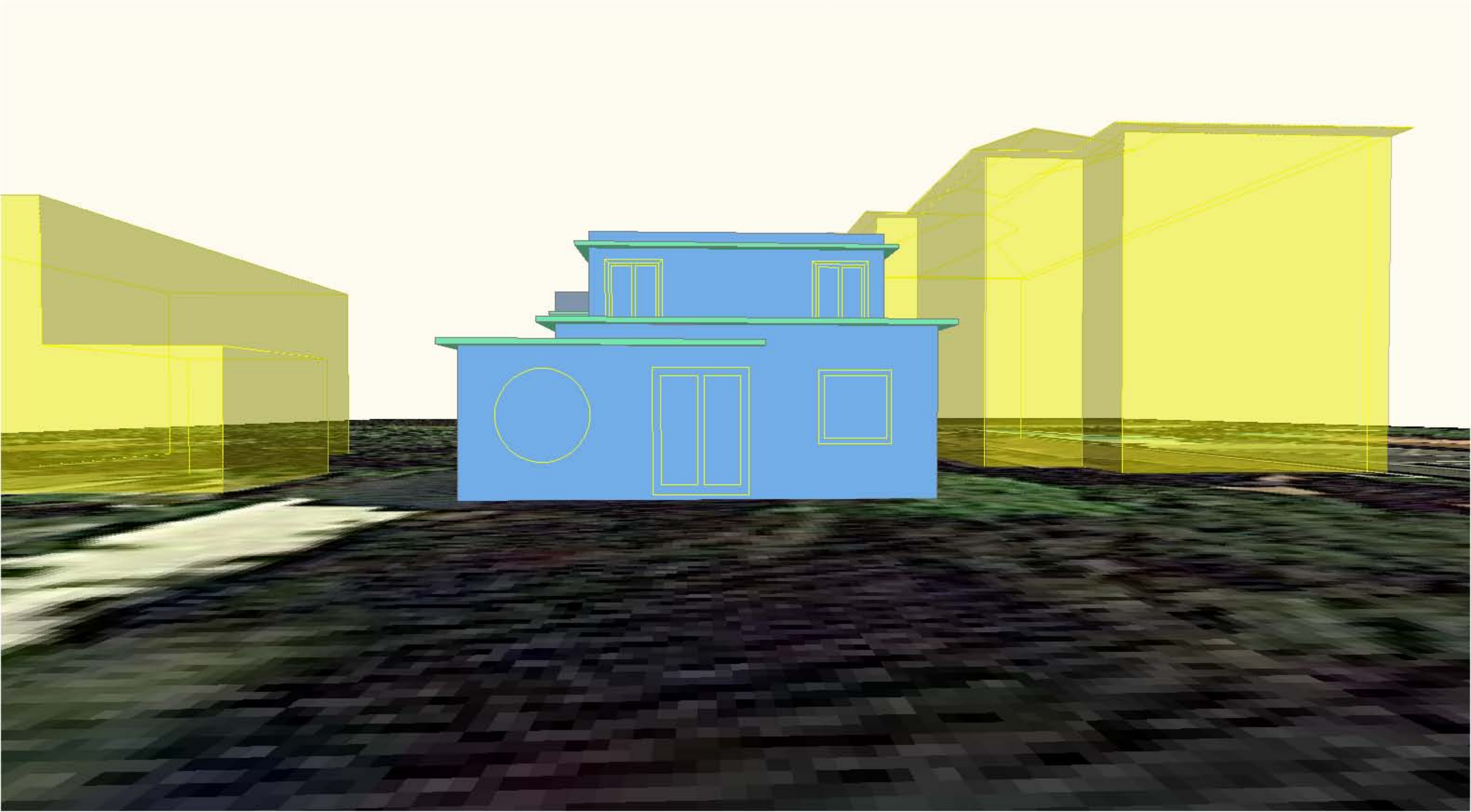

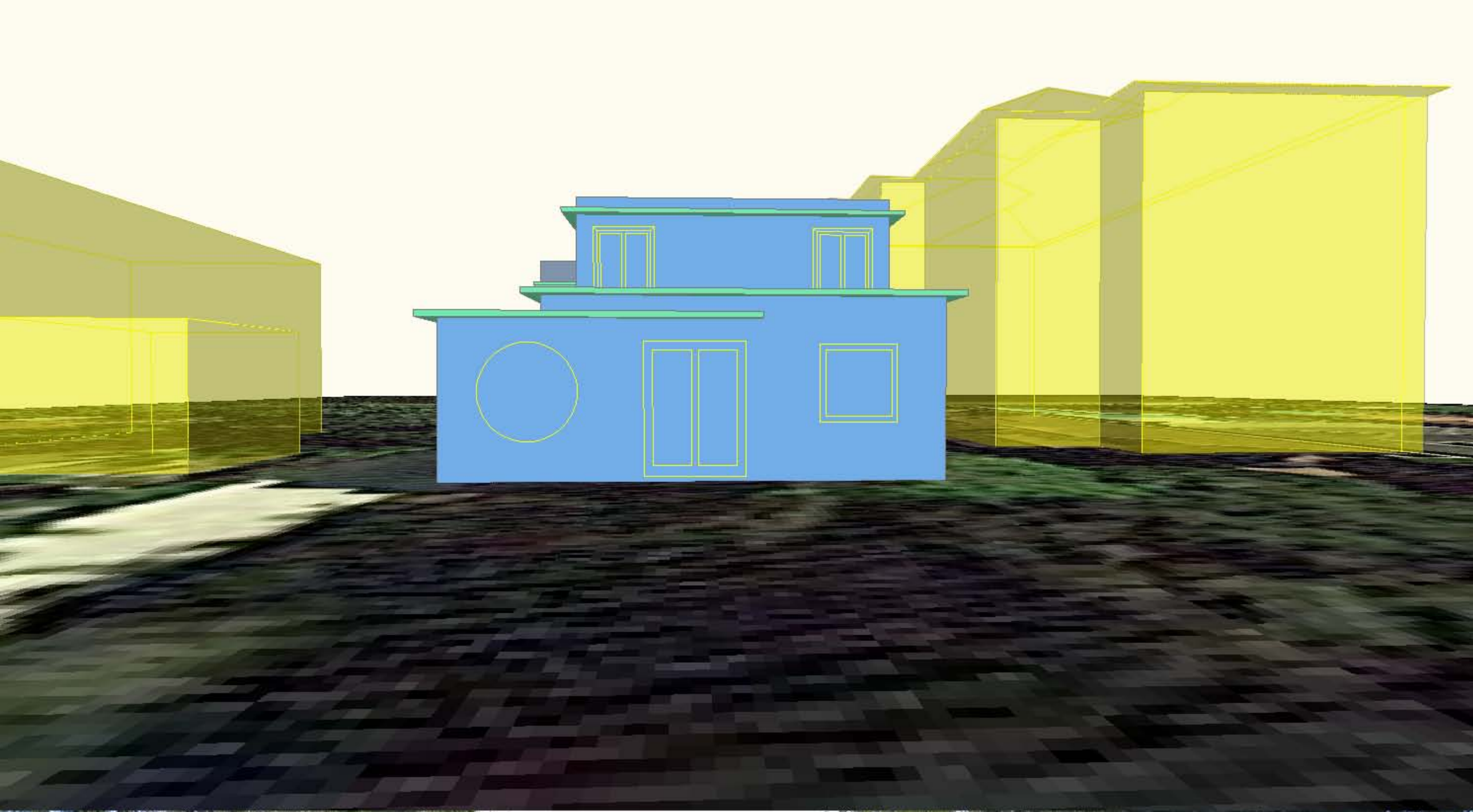

AutoCAD 2009 Cam Drawing.dwg

Camera

Name Camera1
Camera X 206.8434
Camera Y -123.2000

Tools View Output

Line Draw Modify Layer Properties Unsaved Layer State Layers Multiline Text Annotati Create BYLAYER ByLayer

Camera Preview

Visual style : Realistic

Display this window when editing a camera

```
Enter an option [?/Name/LOcation/Height/Target/LEns/Clipping/View/eXit]<eXit>: x
Command:
Command:
```

2182.5219, 285.0062, 528.0033

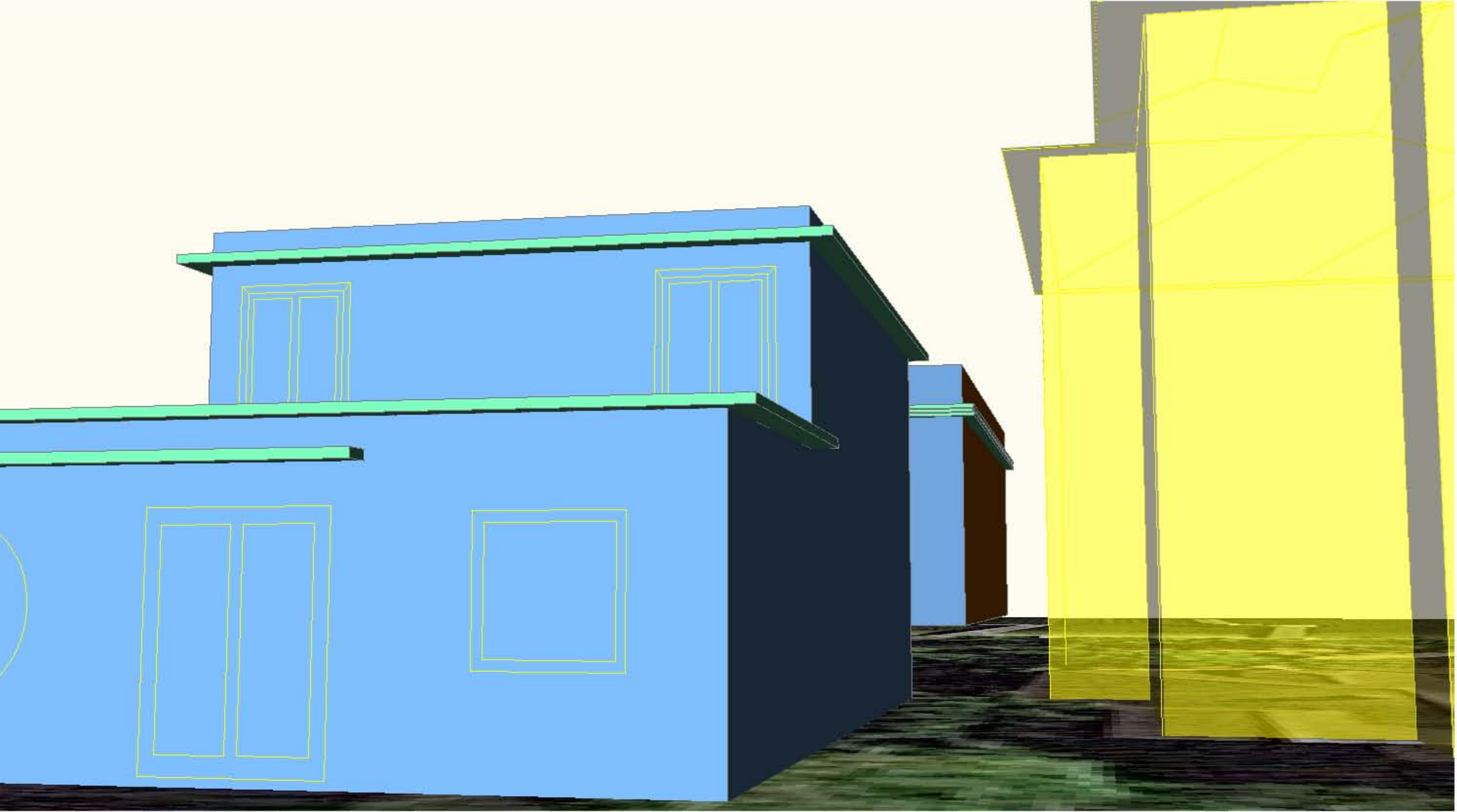

Home | Blocks & References | Annotate | Tools | View | Output

Draw | Modify | Layers | Annotation | Block | Properties | Utilities

Unsaved Layer State | Back House | ByLayer | ByColor

Camera Preview

Visual style : Realistic

Display this window when editing a camera

LEFT

WCS

```
Command: Specify opposite corner: *Cancel*
Command:

Command:
```

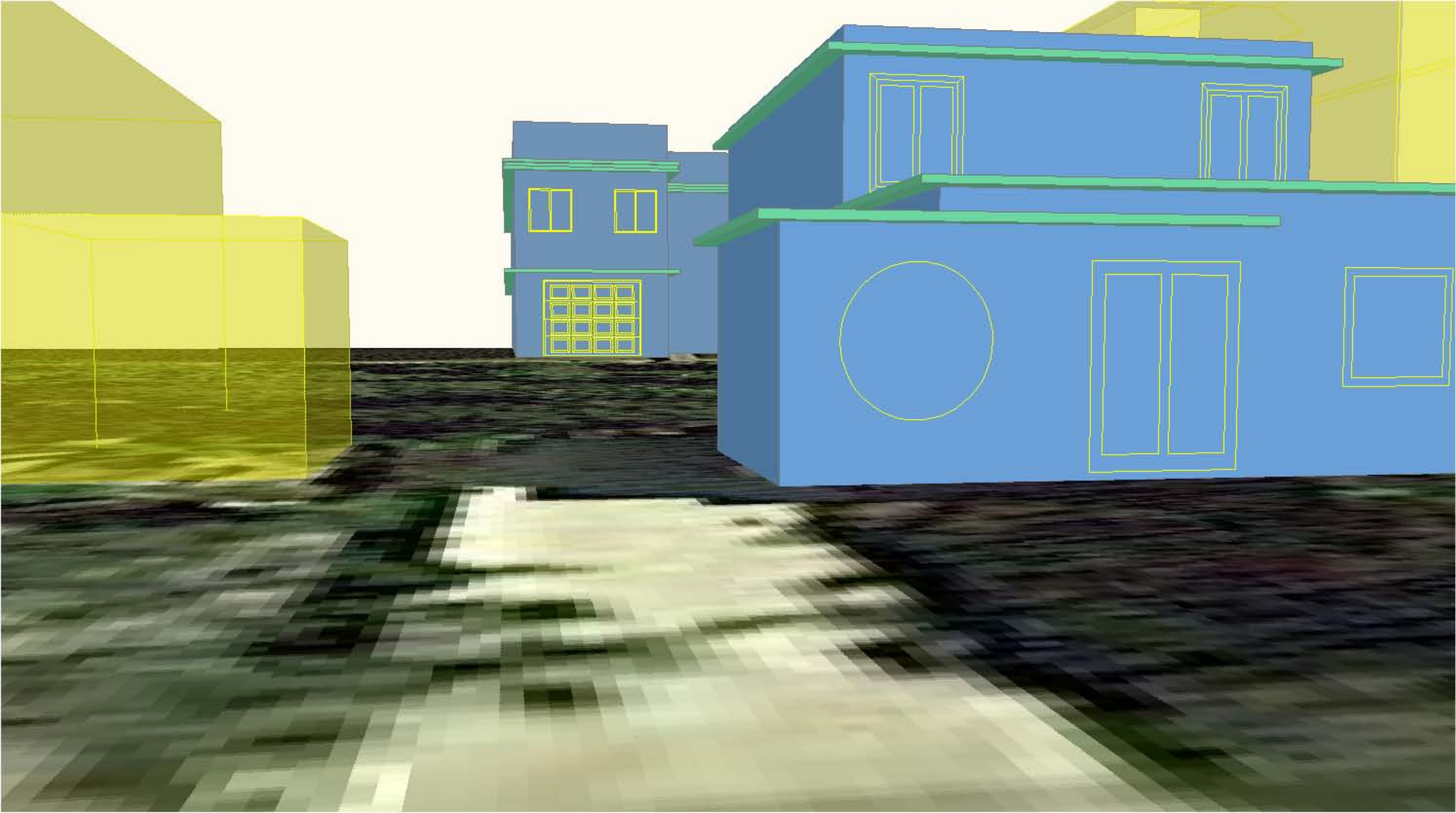

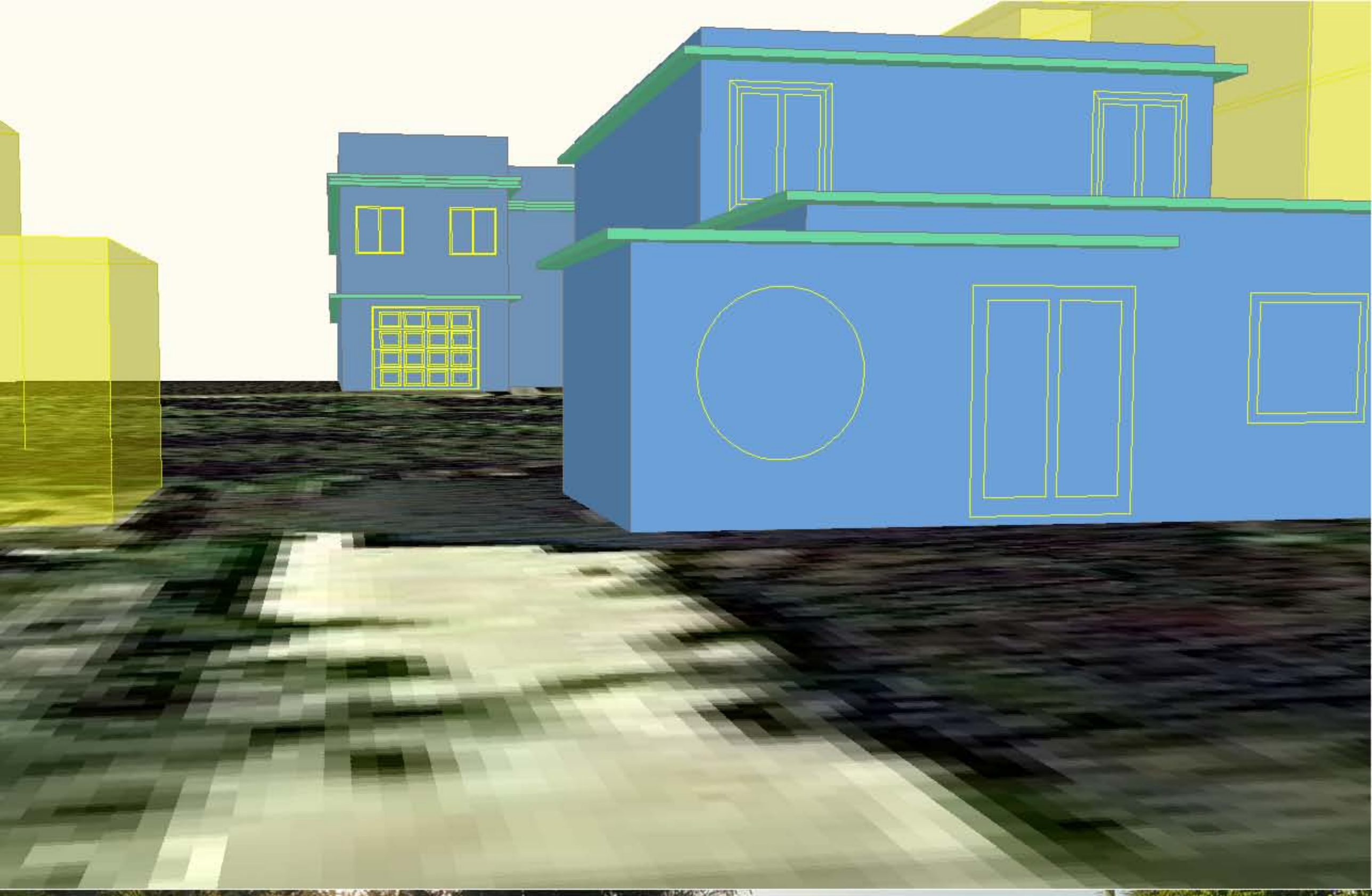

812

AutoCAD 2009 Cam Drawing.dwg

Home | Blocks & References | Annotate | Tools | View | Output

Draw | Modify | Layers | Annotation | Block | Properties | Utilities

Unsaved Layer State

BYLAYER | ByLayer | ByLayer | ByColor

Camera

Name	Camera1
Camera X	206.8434
Camera Y	-423.2000

Camera Preview

Visual style : Realistic

☑ Display this window when editing a camera

```
Enter an option [?/Name/LOcation/Height/Target/LEns/Clipping/View/eXit]<eXit>: x
Command:

Command:
```

2180.6746, -180.8046 , 562.4270

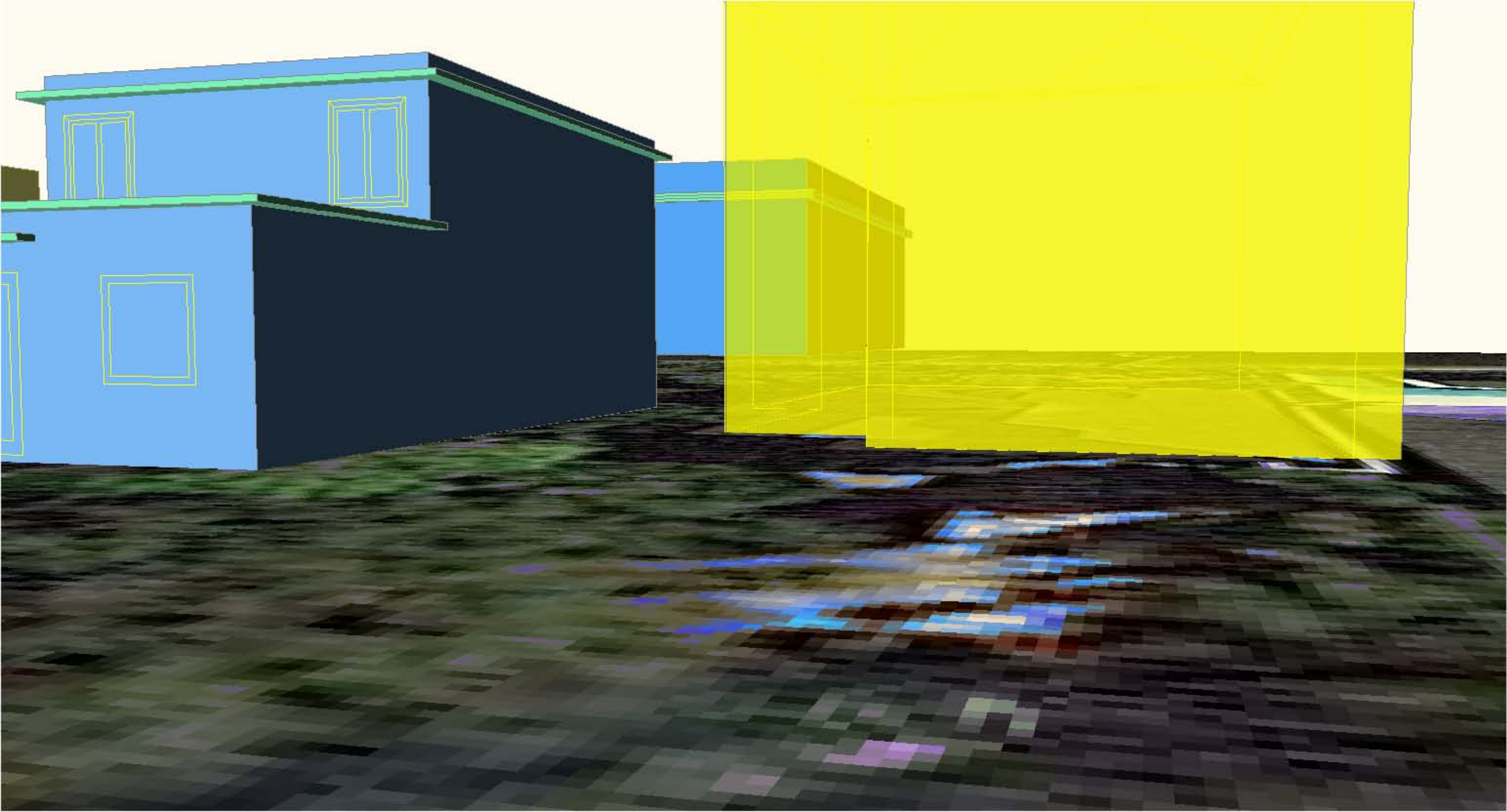

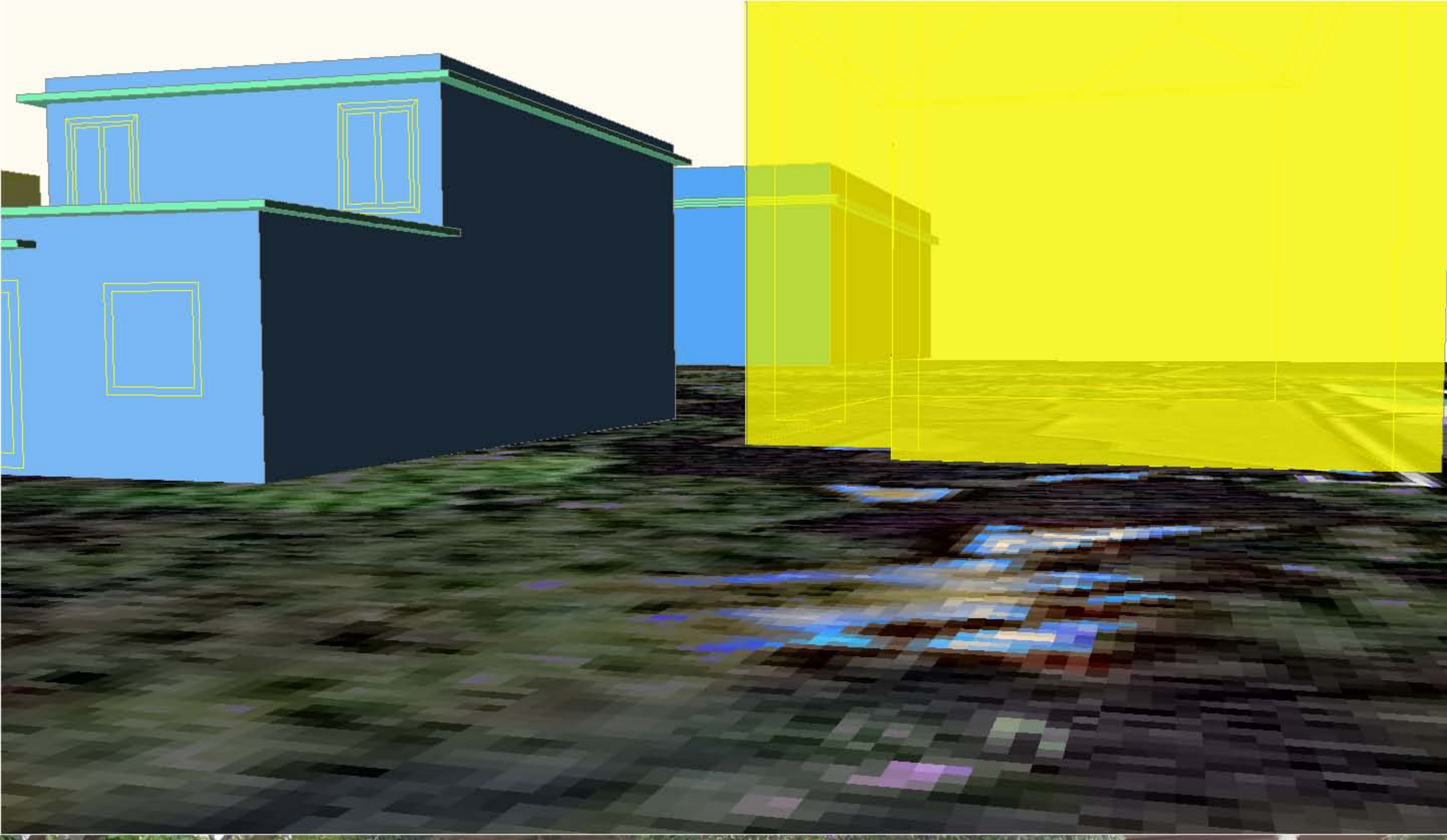

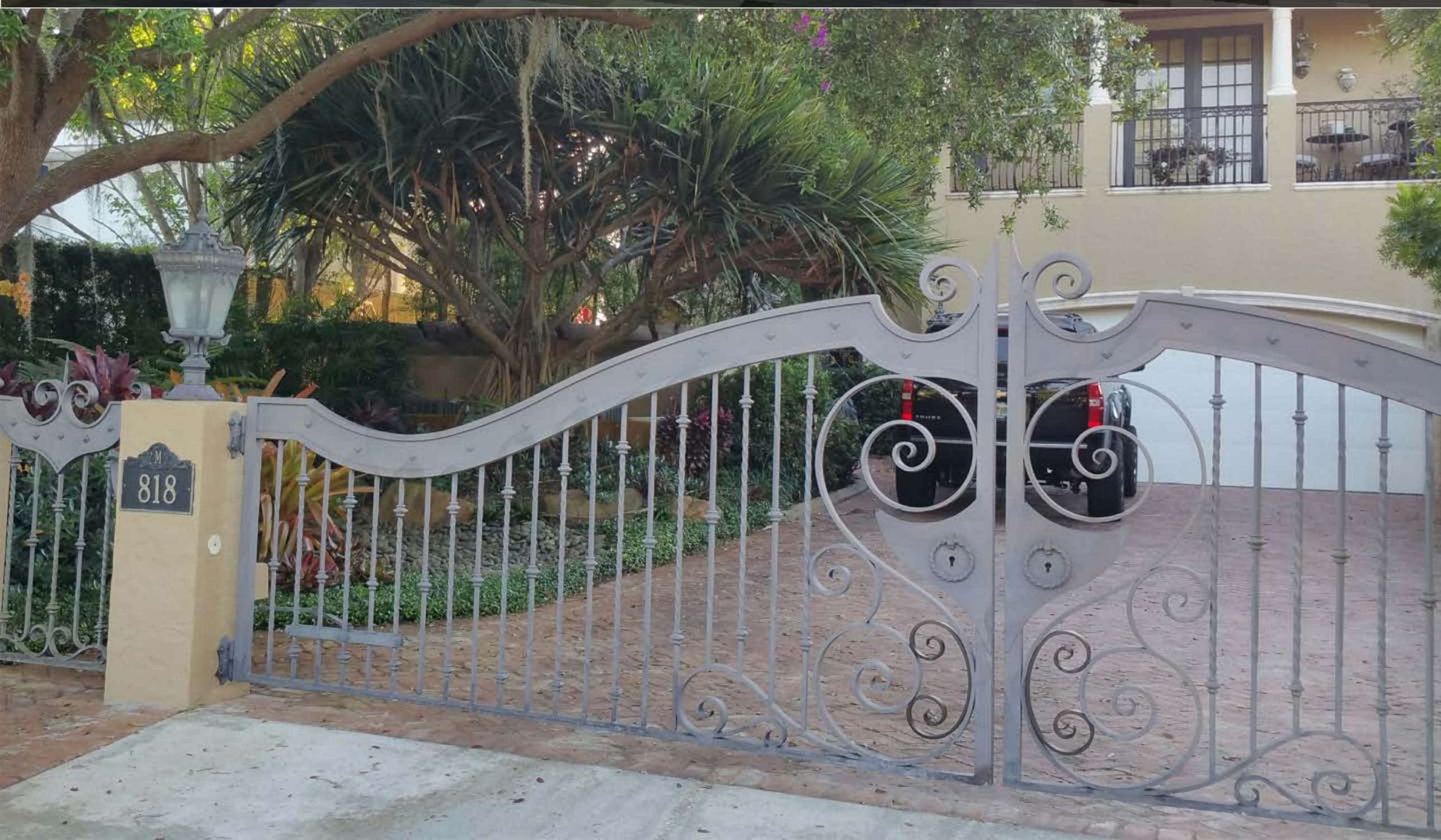
818

AutoCAD 2009 Cam Drawing.dwg

Home | Blocks & References | Annotate | Tools | View | Output

Draw: Line
Modify: Move
Layers: Layer Properties, Unsaved Layer State, Back House
Annotation: Multiline Text
Block: Insert, Create, Edit
Properties: BYLAYER, ByLayer, ByLayer, ByColor
Utilities: Extents

Camera

Name	Camera1
Camera X	206.8434
Camera Y	776.8000

Camera Preview

Visual style : Realistic

☑ Display this window when editing a camera

LEFT

WCS

```
Enter an option [?/Name/LOcation/Height/Target/LEns/Clipping/View/eXit]<eXit>: x
Command:
Command:
```

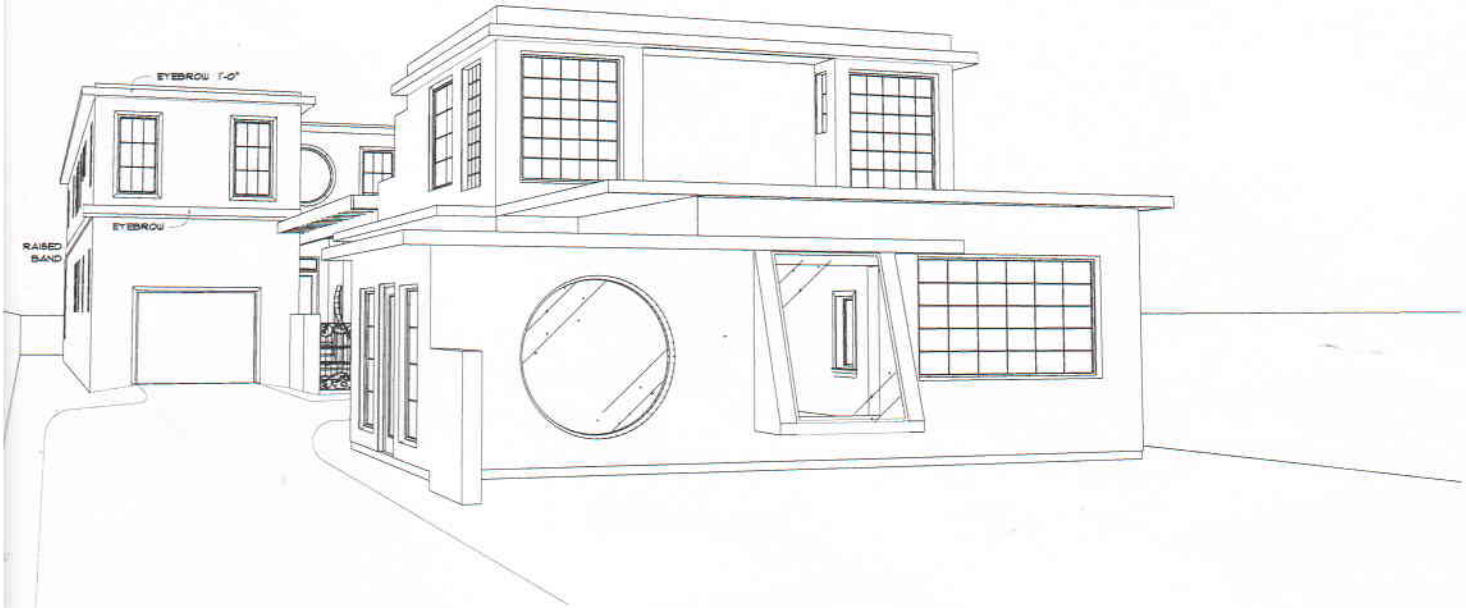

812 SOUTH LAKESIDE DRIVE

SCALE: 1/4" = 1'0"

H. JOHN GRIFFIN II, PE
FL LIC: 38641

SINGLE FAMILY RESIDENCE

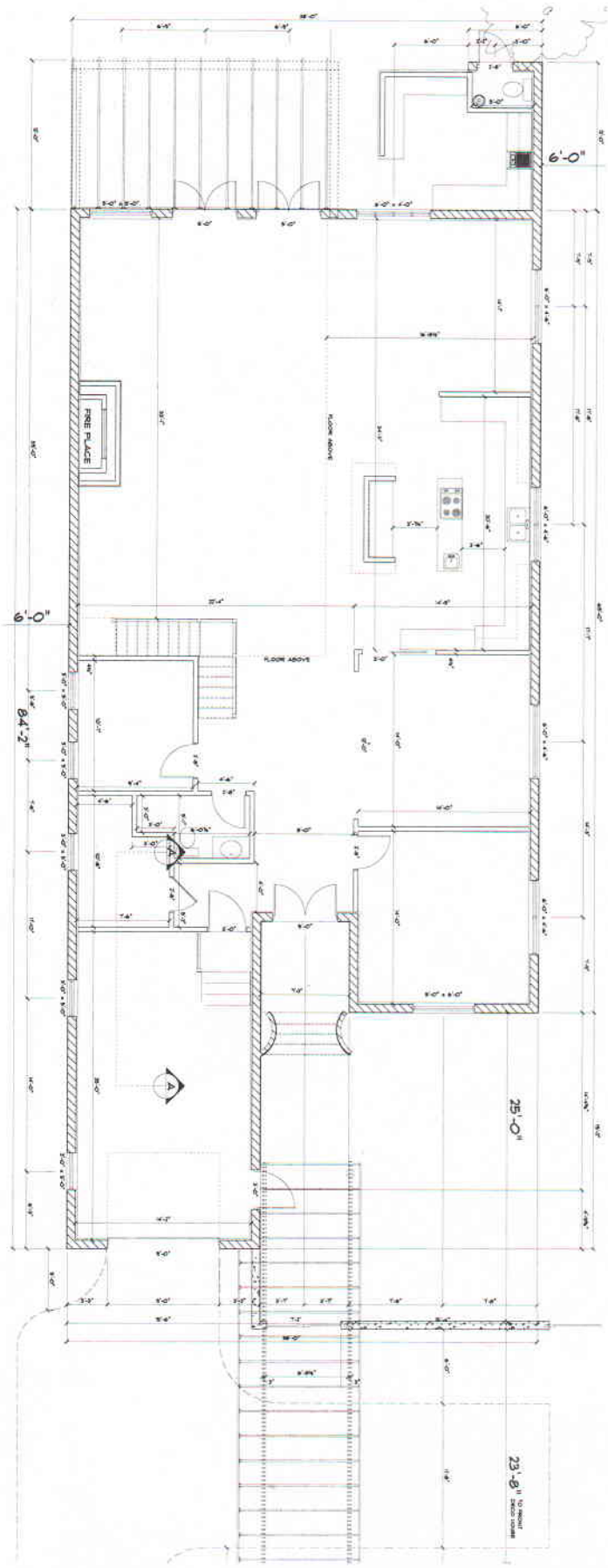

SCALE: 1/4" = 1'0"

01	SHEET # 15032	FIRST FLOOR PLAN	JOB DESCRIPTION: SINGLE FAMILY RESIDENCE 812 SOUTH LAKESIDE DRIVE LAKE WORTH, FL	ART MARINO	DRAFTED BY: CORAL KEY 608 BALLVIEWER RD. 19 APTO, FL 33411

H. JOHN GRIFFIN II, PE
FL LIC: 38647
5398 SW 61 AVENUE
DAVIE, FL 33314
CONTACT NO: 561-722-3850

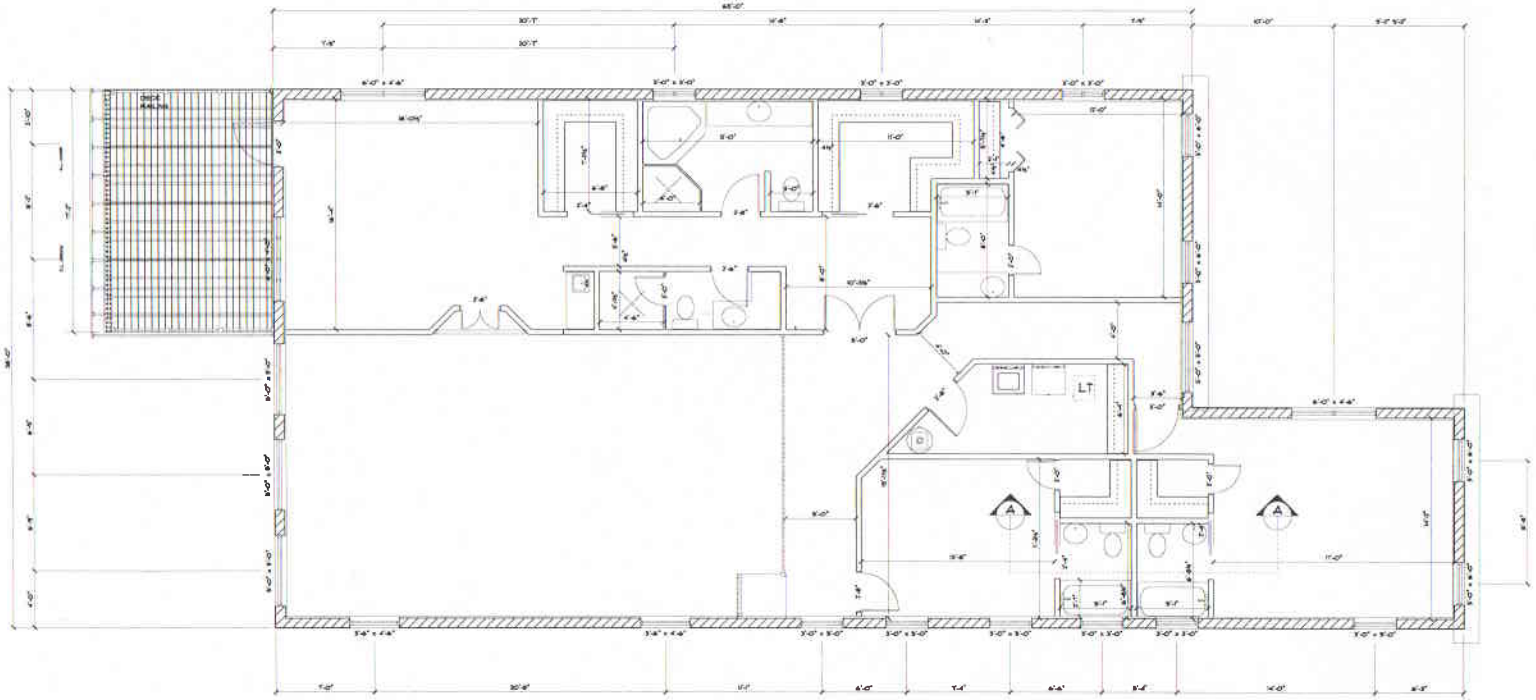

SCALE: 1/4" = 1'0"

H. JOHN GRIFFIN II, PE
FL LIC: 38647
5398 SW 61 AVENUE
DAVIE, FL 33314
CONTACT NO: 561-722-3890

DRAFTED BY:

CONSULTANT:

ART MARINO

JOB DESCRIPTION:

SINGLE FAMILY RESIDENCE
LAKE WORTH, FL

SECOND FLOOR PLAN

• 15032

SHEET
02

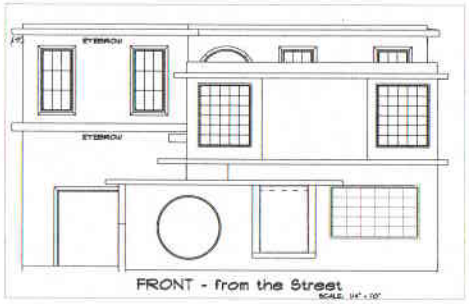

FRONT - from the Street
SCALE: 1/4" = 10'

FRONT - WEST
SCALE: 1/4" = 10'

REAR - EAST
SCALE: 1/4" = 10'

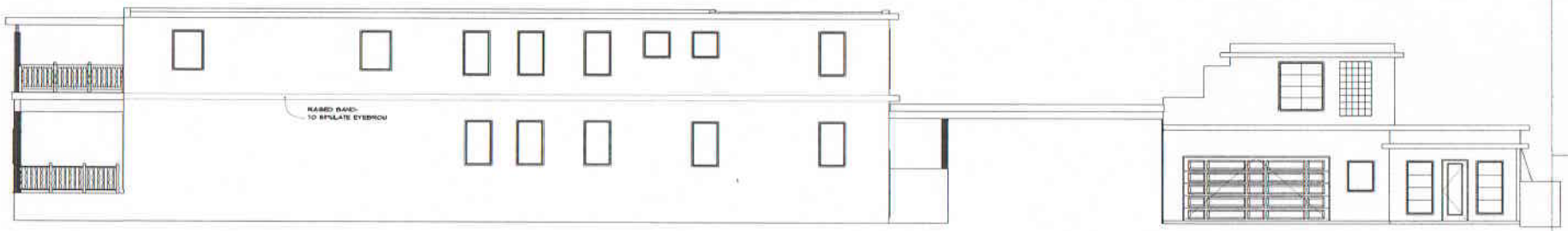

LEFT - NORTH
SCALE: 3/16" = 10'

RIGHT - SOUTH
SCALE: 3/16" = 10'

SCALE: 1/4" & 3/16"

H. JOHN GRIFFIN II, PE
FL LIC: 38641
5398 SW 61 AVENUE
DAVIE, FL 33314
CONTACT NO: 561-722-3850

DRAFTED BY:

ORIGINAL KEY
JOB NO.: 15032
DATE: 12-13-11

ART MARINO

JOB DESCRIPTION
SINGLE FAMILY RESIDENCE
LAKE WORTH, FL

ELEVATIONS PLAN

15032

SHEET
03

SITE DATA AND INFORMATION:

SITE LOCATION: 812 LAKE SIDE DRIVE		
SITE AREA	13,150	SF
	0.30	ACRES
EXISTING RESIDENCE AREA:		
FIRST FLOOR AREA	940	SF - FOOTPRINT
SECOND FLOOR AREA	408	SF
TOTAL FLOOR AREA	1,348	SF
RESIDENTIAL ADDITION		
FIRST FLOOR AREA LIVING	2,507	SF
SECOND FLOOR AREA	1,856	SF
TOTAL FLOOR AREA (Wall Face)	4,363	SF
TOTAL RESIDENTIAL AREA PROPOSED:	5,711	

SITE PERMEABLE AREA (%) =	51%	
PERVIOUS AREA:	6,734	SF
LOT - IMPERVIOUS AREA		

FAR CALCULATIONS:

FLOOR AREA EXISTING FRONT HOUSE	1,348	SF
FLOOR AREA PROPOSED HOUSE	4,363	SF
	5,711	SF
FLOOR AREA DIVIDED BY SITE AREA =	43.4%	

IMPERVIOUS AREA CALCS:

FOOTPRINT OF EXISTING:	1,022	SF
FOOTPRINT OF PROPOSED	3,232	SF
FRONT STAIRS	21	SF
FRONT SIDEWALK ENTRY	170	SF
DRIVEWAY PAVERS @ 50%	910	SF
POOL SURFACE	640	SF
POOL DECK @ 50% PAVERS	380	SF
STEPS TO BEACH	42	SF
IMPERVIOUS AREA	6,416	SF
PERVIOUS AREA: (LOT - IMPERV.)	6,734	SF

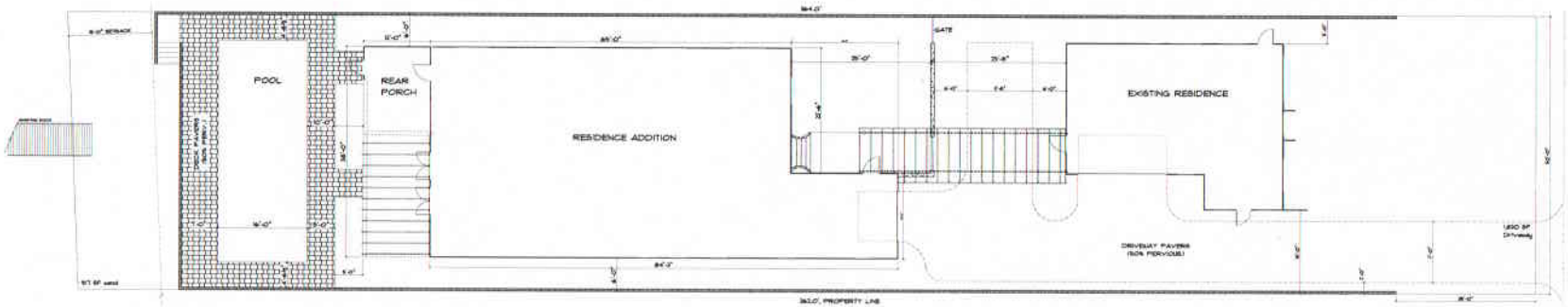

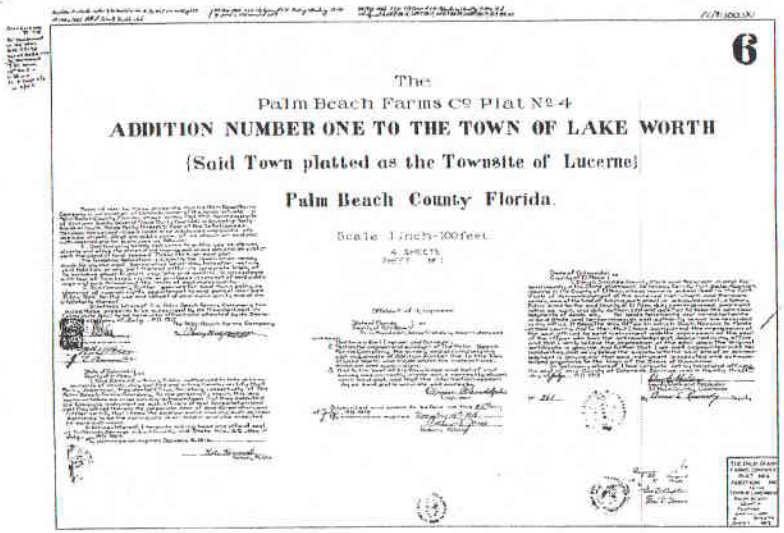

Lot 5, Block 24, ADDITION NO. ONE TO THE CITY OF LAKE WORTH, FLORIDA, according to the PALM BEACH FARMS COMPANY PLAT NO. FOUR, recorded in Plat Book 5, Pages 6 to 9, of the Public Records of PALM BEACH County, Florida.

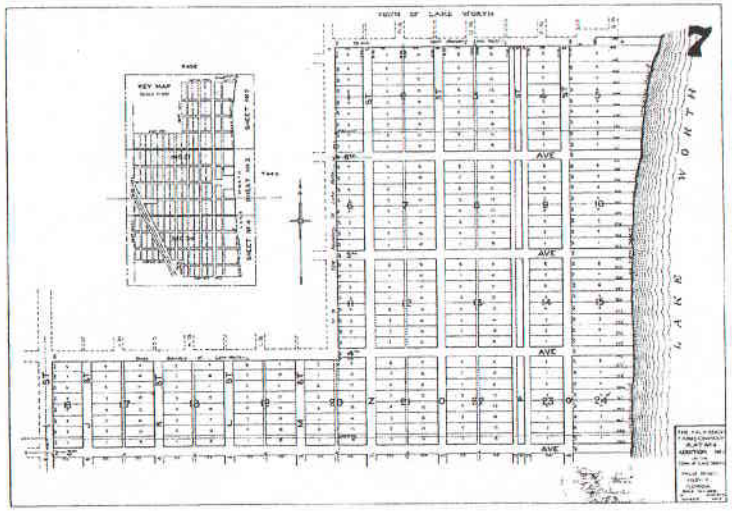

SCALE: 1" = 10'

H. JOHN GRIFFIN II, PE
FL LIC: 38641
5398 SW 61 AVENUE
DAVIE, FL 33314

DRAFTED BY:

ART MARINO

JOB DESCRIPTION:

SINGLE FAMILY RESIDENCE
812 SOUTH LAKESIDE DRIVE

SITE PLAN

• 15033

SHEET

SITE

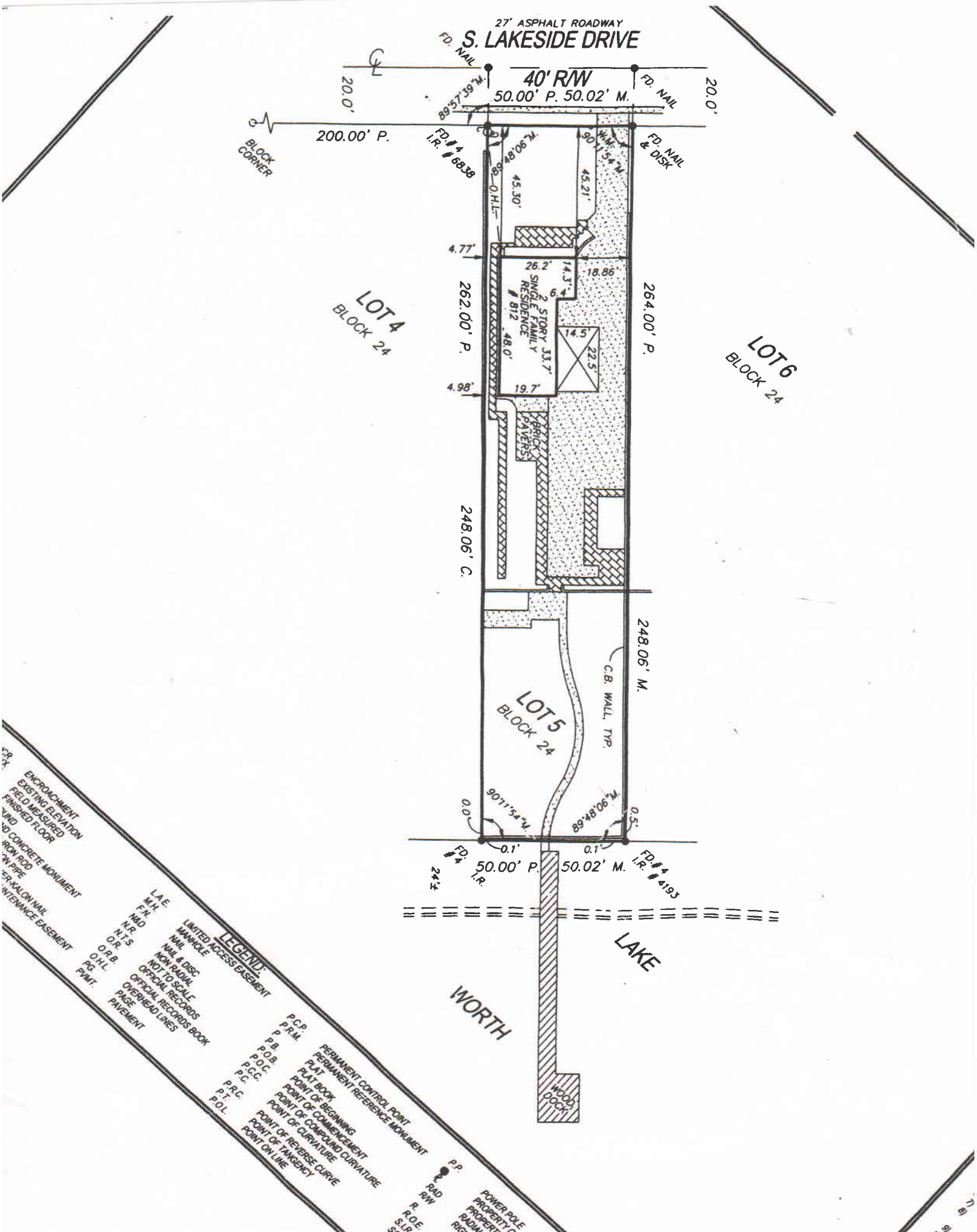
27' ASPHALT ROADWAY
S. LAKESIDE DRIVE
FD. NAIL
40' R/W
50.00' P. 50.02' M.
FD. NAIL
20.0'
20.0'
89°57'39"M.
200.00' P.
BLOCK CORNER
FD. # 4 I.R. # 6838
89°48'06"M.
90°1'54"M.
W.M.
FD. NAIL & DISK
45.30'
45.21'
O.H.L.
4.77'
26.2'
14.3'
18.86'
6.4'
2 STORY SINGLE FAMILY RESIDENCE # 812
33.7'
48.0'
14.5'
22.5'
19.7'
4.98'
BRICK PAVERS
LOT 4
BLOCK 24
262.00' P.
264.00' P.
LOT 6
BLOCK 24
248.06' C.
248.06' M.
C.B. WALL, TYP.
LOT 5
BLOCK 24
90°1'54"M.
89°48'06"M.
0.0'
0.5'
0.1'
0.1'
FD. # 4 I.R.
50.00' P.
50.02' M.
FD. # 4 I.R. # 4193
24'±
LAKE
WORTH
WOOD DOCK
LEGEND:
L.A.E. LIMITED ACCESS EASEMENT
M.H. MANHOLE
F.N. NAIL
N&D NAIL & DISC
N.R. NON RADIAL
N.T.S. NOT TO SCALE
O.R. OFFICIAL RECORDS
O.R.B. OFFICIAL RECORDS BOOK
O.H.L. OVERHEAD LINES
PG. PAGE
P/MT. PAVEMENT
P.C.P. PERMANENT CONTROL POINT
P.R.M. PERMANENT REFERENCE MONUMENT
P PLAT
P.B. PLAT BOOK
P.O.B. POINT OF BEGINNING
P.O.C. POINT OF COMMENCEMENT
P.C.C. POINT OF COMPOUND CURVATURE
P.C. POINT OF CURVATURE
P.R.C. POINT OF REVERSE CURVE
P.T. POINT OF TANGENCY
P.O.L. POINT ON LINE
P.P. POWER POLE
RAD PROPERTY CORNER
R/W RADIAL
R.R.O.E. RAILROAD
S.L.R. SOUTHERN LIGHT & RAILWAY
ENCROACHMENT
EXISTING ELEVATION
FIELD MEASURED
FINISHED FLOOR
GROUND
CONCRETE MONUMENT
IRON ROD
IRON PIPE
PAPER-KALON NAIL
MAINTENANCE EASEMENT

Gary R. Nikolits, CFA
Property Appraiser
Palm Beach County

Homestead Exemption E-file

Owner Name: MARINO ARTHUR JR
Parcel Control Number: 38-43-44-27-01-024-0050
Location Address: 812 S LAKESIDE DR

Structural Element for Building 1

1.	Exterior Wall 1	CB STUCCO
2.	Year Built	1940
3.	Air Condition Desc.	NO HTG/AC
4.	Heat Type	NONE
5.	Heat Fuel	NONE
6.	Bed Rooms	
7.	Full Baths	1
8.	Half Baths	1
9.	Exterior Wall 2	N/A
10.	Roof Structure	FLAT
11.	Roof Cover	BUILT-UP T/G
12.	Interior Wall 1	PLASTER
13.	Interior Wall 2	N/A
14.	Floor Type 1	TERRAZZO MONO.
15.	Floor Type 2	N/A
16.	Stories	2

Sketch for Building 1

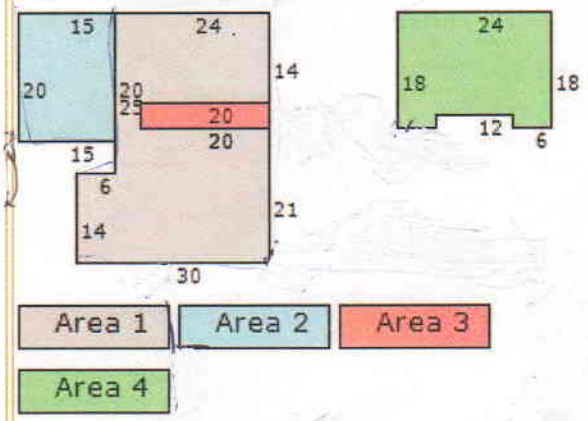

Subarea and Sq. Footage for Building 1

No.	Code Description	Sq. Footage
1.	BAS BASE AREA	940
2.	UCP UNFINISHED CARPORT	300
3.	FST FINISHED STORAGE	80
4.	FUS FINISHED UPPER STORY	408
	Total Square Footage :	1728
	Total Area Under Air :	1348

Extra Feature

Description	Year Built	Units
PATIO	1940	207
BOAT DOCK	1985	686

Unit may represent the perimeter, square footage, linear footage, total number or other measurement of the feature depending on the feature described.

Land Details

Land Line #	Description	Zoning	Units	Acres
1.	INTRACOASTAL	1	0	

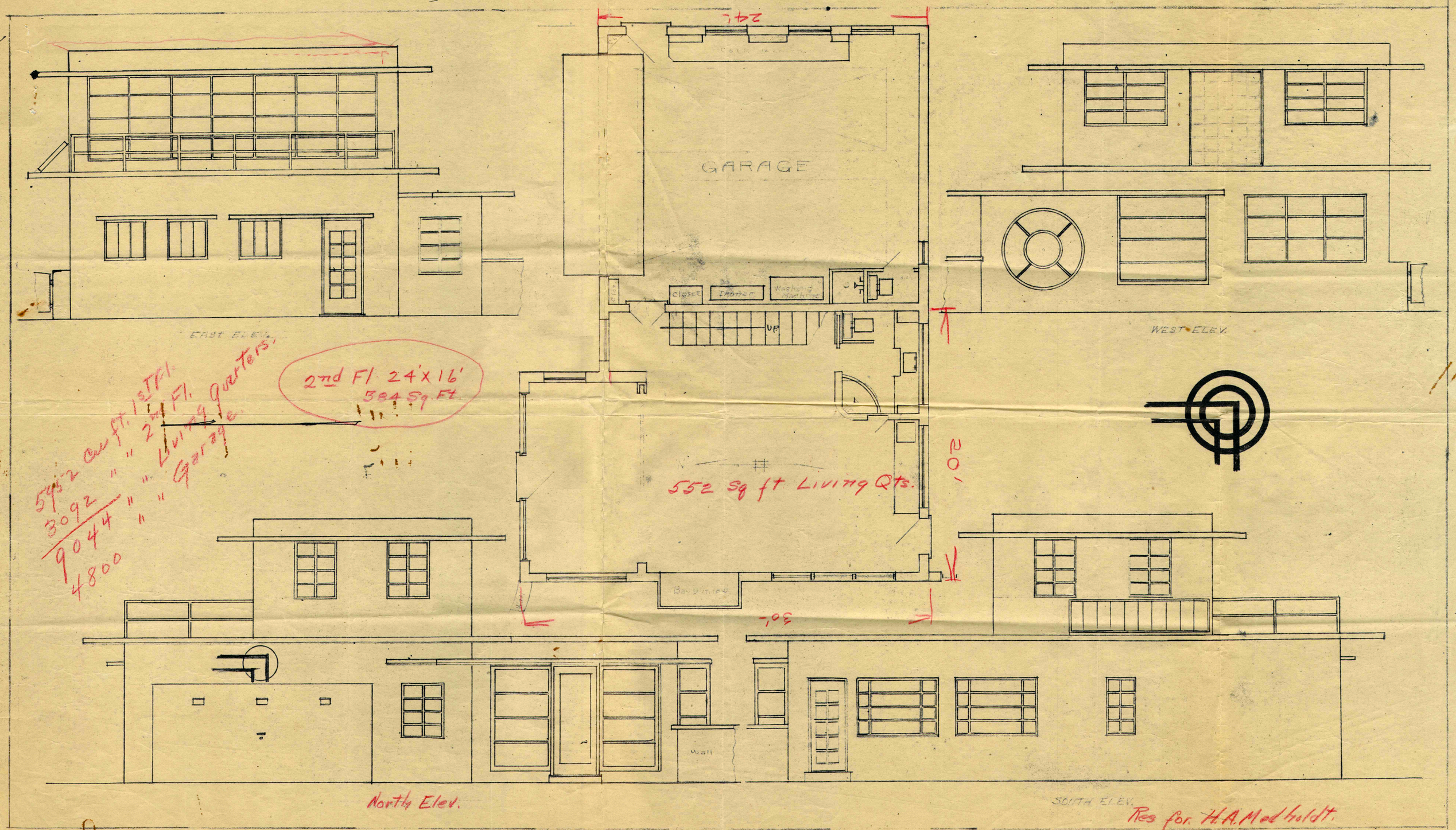
EAST ELEV.
GARAGE
closet
Ironer
Washing Machine
UP
WEST ELEV.
2nd Fl 24'x16'
384 Sq Ft
552 sq ft Living Qts.
24'
20'
30'
Bay Window
Wall
North Elev.
SOUTH ELEV.
Res for. H.A. Modholdt.
Lot 5 Blk 24
810 So Lake Side Dr.

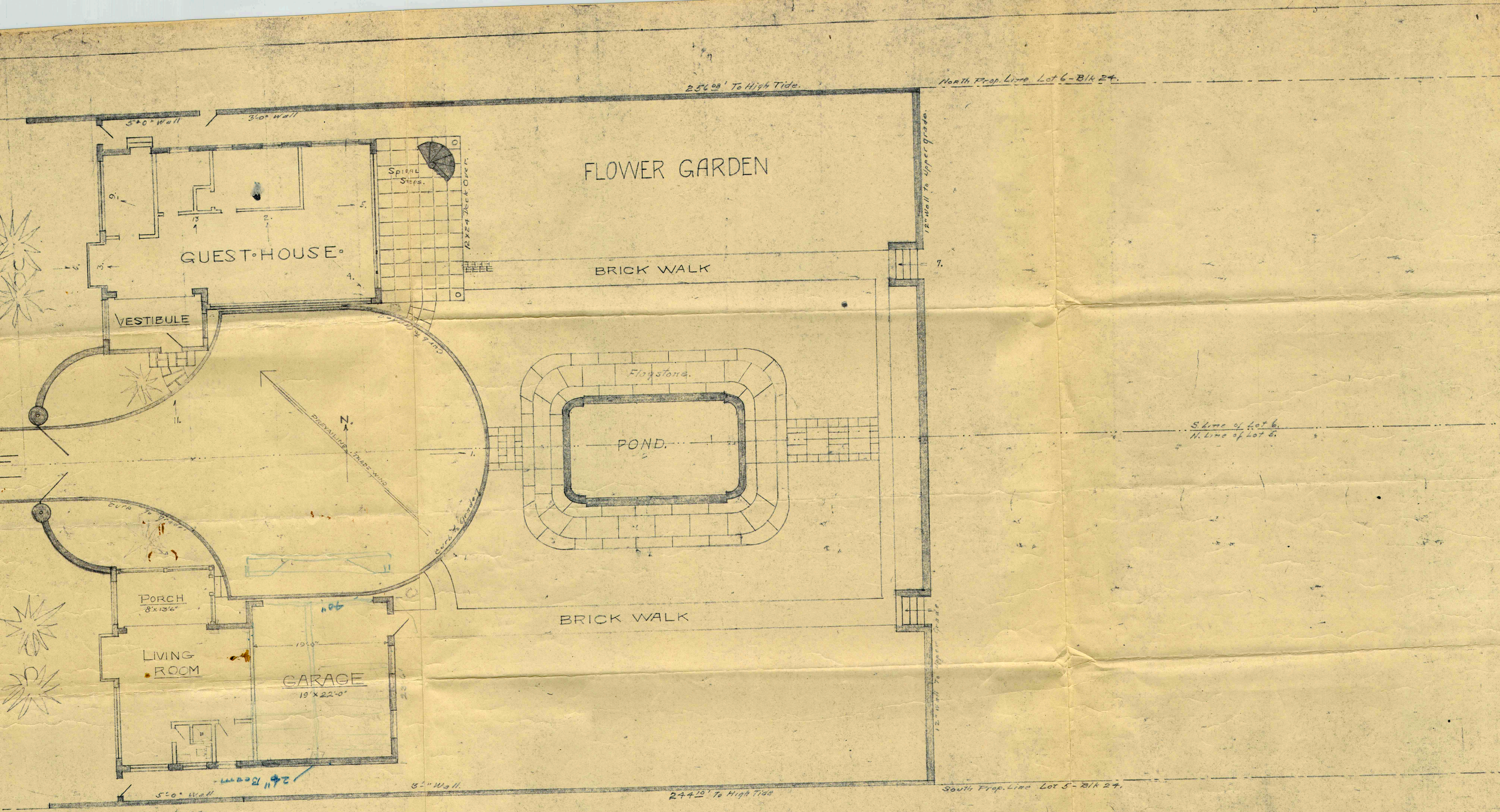

12/24/43-
Approved for setbacks.
John Blair
A. E. Raidell
S. H. Geiler
R. Long

LAYOUT OF MEDHOLDT PROPERTY

S.H.A. LAKE WORTH, FLA. 1/8" = 1'0".

-1942-

G. Thomson

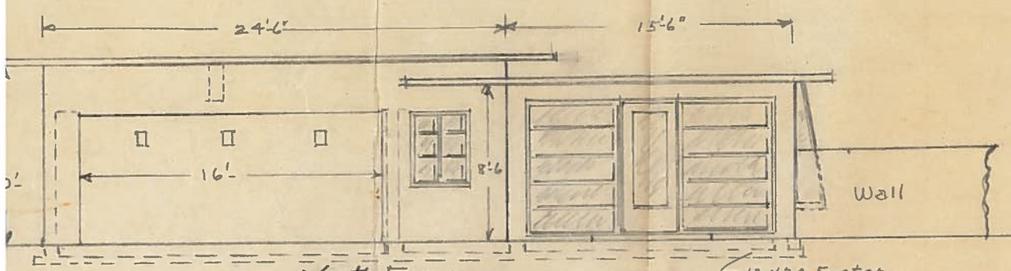

North Elevation.

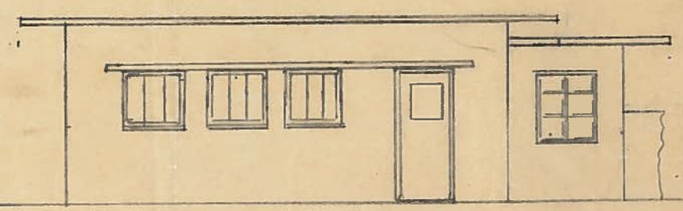

East Elev.

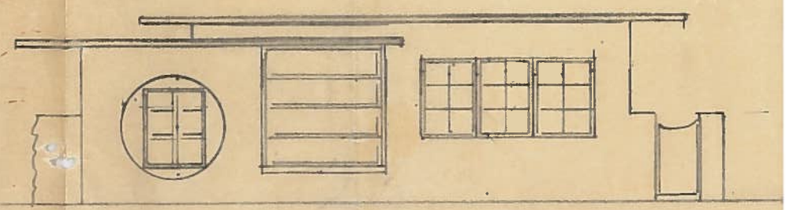

West Elevation.

Med
Ru
G

Lake Worth, Florida. The Art of Florida Living.sm

City Of Lake Worth
Department for Community Sustainability
Planning, Zoning and Historic Preservation Division
1900 Second Avenue North · Lake Worth · Florida 33461· Phone: 561-586-1687

MEMORANDUM DATE: May 4, 2016

AGENDA DATE: May 11, 2016

TO: Chair and Members of the Historic Resources Preservation Board

RE: **402 North Lakeside Drive**

FROM: Aimee N. Sunny, Preservation Planning Coordinator
Department for Community Sustainability

TITLE: HRPB Project Number 16-00100092: Consideration of a Certificate of Appropriateness (COA) for exterior alterations including roof, window, and door replacement for the single-family structure located at **402 North Lakeside Drive**; PCN# 38-43-44-21-15-428-0 010. The subject property was constructed in 1958 and is a non-contributing resource within the Old Lucerne Local Historic District.

OWNER/APPLICANT: Robert W. and Daphne Eaton
402 N Lakeside Drive
Lake Worth, FL 33460

BACKGROUND:

The single family structure at 402 North Lakeside Drive was designed in 1958 by architect Hilliard T. Smith Jr. for owner Mr. and Mrs. Gilbert A. Labine. The property has public frontage on North Lakeside Drive to the west and the Lake Worth Municipal Golf Course to the east. The building was constructed in a Mid-Century Modern architectural style, and still retains all of its character defining features. These character defining features include the decorative aluminum porch grill and screen, decorative coquina stone, a hipped-gable flat white concrete tile roof, the original silver aluminum awning windows, and concrete masonry construction with a smooth stucco finish.

The original architectural plans for the building are available in the City's property files. Based on the information in the property file, minimal exterior alterations have occurred over time, including a roof replacement with white concrete tile and a swimming pool installation. Overall, the building retains a high degree of historic integrity of location, setting, materials, and design.

REQUEST:

The Applicant is proposing exterior modification to the building as follows:

1) Replace the existing white concrete tile roof with a new GAF Dimensional Asphalt shingle roof.
2) Replace the existing original silver awning windows with white aluminum single-hung windows.
3) Replace (2) existing silver aluminum sliding glass doors with impact white aluminum sliding glass doors.
4) Replace the front door with a new Mid-Century style door.

COMPREHENSIVE PLAN CONSISTENCY:

It is the analysis of Staff that the project, as proposed, is not consistent with the Comprehensive Plan goals and objectives concerning historic preservation and housing due to the fact that the Applicant is proposing a change that will have an adverse effect on the historic integrity of the property. Specifically, the request is in conflict with these objectives:

Goal 1.4 Encourage preservation and rehabilitation of historic and natural resources and where appropriate restrict development that would damage or destroy these resources. (Objective 1.4.2)

Objective 3.2.5: To encourage the identification of historically significant housing, and to promote its preservation and rehabilitation as referenced by the Surveys of Historic Properties conducted for the City of Lake Worth.

Policy 3.2.5.1: Properties of special value for historic, architectural, cultural or aesthetic reasons will be restored and preserved through the enforcement of the City's Historic Preservation Ordinance to the extent feasible.

ANALYSIS:

Zoning

The proposed alterations are not in conflict with the development requirements in the City's Zoning Code.

Historic Preservation

Staff has reviewed the documentation and materials provided in this application and outlined the applicable guidelines and standards found in the City's Historic Preservation Ordinance, detailed in Attachment 1 – Decision Criteria.

The National Park Service and Secretary of the Interior's Standards have very specific criteria regarding replacement of historic materials. Specifically Standards 2, 5, and 6 apply in this situation:

Standard 2 - The historic character of a property will be retained and preserved. The removal of distinctive materials or alteration of features, spaces, and spatial relationships that characterize a property will be avoided.

Standard 5 - Distinctive materials, features, finishes, and construction techniques or examples of craftsmanship that characterize a property will be preserved.

Standard 6 - Deteriorated historic features will be repaired rather than replaced. Where the severity of deterioration requires replacement of a distinctive feature, the new feature will match the old in design, color, texture, and, where possible, materials. Replacement of missing features will be substantiated by documentary and physical evidence.

It is the analysis of Staff that the project as proposed is not compatible with the review criteria set forth in the City's Land Development Regulations, Historic Preservation Ordinance, Section 23.5-4.

Roof

According to the Secretary of the Interior's Standards, distinctive materials that characterize a property shall be preserved. The roof material is an important character defining feature of a historic property. According to the

City's property file, the original roof in 1958 was a flat white concrete tile. In 1990, this material was removed, and a replacement white concrete roof was installed. The building currently has had the white concrete roof removed to repair and replace the underlayment to stop active leaks. The Applicant has requested to re-roof using an asphalt shingle product, given the property's location on the golf course and the tile damage caused by stray golf balls. The Applicant's justification states that currently the golf balls will break the concrete tile and that an asphalt shingle roof would not have this issue.

It is the anaylsis of Staff that the proposed change to a dimensional asphalt shingle is not appropriate for the architectural style of the building, and would constitute an adverse effect on the integrity of the design and materials of the resource. The proposed asphalt shingle roof differs greatly in exterior appearance from a flat white raised concrete tile roof. The dimensional shingle lacks the same thickness and depth, and horizontal banding appearance of the concrete tile. The concrete tile roof, often referred to as a "Bermuda tile roof", was especially used in southern climates as it reflects the heat from the intense southern sun helping to keep the structures cool. These roofs also tend to have a life expectancy of 50 years or more, making them more sustainable than other roof materials. Furthermore, the asphalt shingle roof material would not be consistent with the guidelines set forth in the Secretary of the Interior's Standards for Rehabilitation, as adopted by the City of Lake Worth as part of the review criteria for Certificates of Appropriateness.

The durability of the white concrete tile roof in comparsion to dimensional asphalt shingles when hit by a golf ball was addressed by the City of Lake Worth's building inspector Rick Jones, who provided a letter with his expert testimony. Staff would like to draw special attention to this testimony that states:

"An asphalt shingle is basically an asphalt coated fiberglass mat, covered by ceramic coated granules. When struck by a hailstone (or golf ball), depending on the size and speed of the strike, the shingle is 'bruised.' This can loosen the granules and sometimes even cut the fiberglass mat. Often the extent of the damage is not immediately evident. As the granules fall out, the asphaltic matrix is weakened allowing water intrusion and associated damage."

The National Park Service Preservation Brief #4 "Roofing for Historic Buildings" has been included as Attachment #7. This Brief discusses the issues and options for the repair and replacement of historic roofs. Under the "Alternative Materials" section of the Brief, Staff would like to draw special attention to this paragraph:

"In a rehabilitation project, there may be valid reasons for replacing the roof with a material other than the original. The historic roofing may no longer be available, or the cost of obtaining specially fabricated materials may be prohibitive. But the decision to use an alternative material should be weighed carefully against the primary concern to keep the historic character of the building. If the roof is flat and is not visible from any elevation of the building, and if there are advantages to substituting a modern built-up composition roof for what might have been a flat metal roof, then it may make better economic and construction sense to use a modern roofing method. But if the roof is readily visible, the alternative material should match as closely as possible the scale, texture, and coloration of the historic roofing material."

The roof is readily visible, and is a very distinct, expansive feature on the structure. The only feasible, available product that will replicate the scale, texture, and coloration of the historic roofing material is flat white concrete tile. Additionally, advances in the underlayment material and foam used for setting the concrete tile will provide more flexibility when a golf ball hits the roof. The new foam should be more elastic and flexible than the previous material, and will help reduce the number of tiles that break. Another option could be to consider coating the roof with a slurry mixture, in order to provide an extra layer of protection against breakage.

Windows

According to the Secretary of the Interior's Standards, distinctive materials that characterize a property shall be preserved. The original silver aluminum awning windows are an important character defining feature on this structure. The Applicant is requesting to replace these windows with white single-hung windows. The type, finish, and configuration of the proposed windows is not consistent with the original windows for this structure.

According to the Standards and the Code, the windows should be repaired if at all possible, and if repair is not possible, replacement windows should match the design, color, texture, and materials of the existing windows. Staff has recommended impact silver aluminum casement windows with exterior raised applied triangular muntins to replicate the appearance of the original windows. Unfortunately, several of the existing window openings are too large for a single casement window. Staff and the Applicant have researched alternative window replacement options with impact glass, including casement, hopper, and awning windows, and have not located a compatible replacement match for the larger openings. It would be possible to use casement, awning, or hopper windows in many of the openings, however the large 3-pane and 4-pane windows on the front of the structure are too large for these types of windows.

The Applicant has requested white aluminum single-hung windows as the most feasible option for most openings, and will utilize hopper style windows in several of the smaller bathroom windows. The single-hung windows could have exterior raised applied triangular muntins added in order to closely replicate the pattern of the existing windows. Additionally, clear anodized, or silver mill finish windows would most closely replicate the existing color and appearance of the silver windows. Due to the lack of a compatible replacement material, staff will defer the decision to the board on the most appropriate course of action.

Public Comment
At the time of publication of this report, Staff has not received any public comment regarding this project.

CONSEQUENT ACTION:
Approve the application; approve the application with conditions; continue the hearing to a date certain to request additional information; or deny the application.

RECOMMENDATION:
Staff recommends that the Board deny the request for roof replacement with an alternate material, given that the project as proposed by the Applicant does not meet the Secretary of the Interior's Standards for Rehabilitation, does not meet the criteria set forth in the City of Lake Worth Land Development Regulations §23.5-4(k), and will have an adverse effect on the integrity and character of the property. Staff recommends that a new flat white concrete tile roof be installed on the structure.

If the Board chooses to approve an alternate roof material for the building, Staff recommends the following conditions:

1) The roof shall be a dimensional asphalt shingle, in a white color, in order to most closely replicate the original flat white concrete tile roof.

Staff recommends that the Board discuss the request for window replacement with an alternate material. The proposal, as submitted by the Applicant does not meet the Secretary of the Interior's Standards for Rehabilitation, does not meet the criteria set forth in the City of Lake Worth Land Development Regulations §23.5-4(k), and will have an adverse effect on the integrity and character of the property.

If the Board chooses to approve new replacement windows for the building, Staff recommends the following conditions:

1) Replacement windows shall be single-hung type windows, match the original window opening sizes, and have a divided light pattern that replicates the original aluminum awning windows. Where 3-light awning windows exist, they shall be replaced with 2/2 (4 light) windows.
2) The divided light pattern shall be created by using exterior raised applied triangular muntins to replicate the pane configuration of the awning windows. No flat or internal muntins shall be allowed. The proper divided light pattern shall be reviewed by Staff at permitting.
3) The aluminum window replacements shall have a clear anodized or silver mill finish in order to most closely replicate the original aluminum windows.
4) The Applicant shall utilize light gray screens rather than dark vinyl screens in order to minimize the impact of the panes of glass sitting in different visual planes.
5) No reflective or mirrored glass shall be used.
6) All work shall be subject to staff review during permitting and inspection during construction.

POTENTIAL MOTIONS:

Roof Replacement:

I MOVE TO **DENY** HRPB 16-00100092: Consideration of a Certificate of Appropriateness (COA) for roof replacement with an alternate material for the subject building located at 402 North Lakeside Drive because the Applicant has not established by a preponderance of the competent substantial evidence that the application is not in compliance with the City of Lake Worth Land Development Regulations Section 23.5-4, the Secretary of the interiors Standards for the Rehabilitation of Historic Properties, and the City's Comprehensive Plan.

I MOVE TO **APPROVE** HRPB 16-00100092: Consideration of a Certificate of Appropriateness (COA) for roof replacement with an alternate material for the subject building located at 402 N Lakeside Drive, with the conditions as recommended by Staff, based upon the preponderance of competent substantial evidence, and pursuant to the City of Lake Worth Land Development Regulations Section 23.5-4.

Window and Door Replacement:

I MOVE TO **DENY** HRPB 16-00100092: Consideration of a Certificate of Appropriateness (COA) for window and door replacement for the subject building located at 402 North Lakeside Drive because the Applicant has established by a preponderance of the competent substantial evidence that the application is not in compliance with the City of Lake Worth Land Development Regulations Section 23.5-4, the Secretary of the interiors Standards for the Rehabilitation of Historic Properties, and the City's Comprehensive Plan.

I MOVE TO **APPROVE** HRPB 16-00100092: Consideration of a Certificate of Appropriateness (COA) for window and door replacement for the subject building located at 402 N Lakeside Drive, with the conditions as recommended by Staff, based upon the preponderance of competent substantial evidence, and pursuant to the City of Lake Worth Land Development Regulations Section 23.5-4.

ATTACHMENTS:

1. Decision Criteria
2. Photographs
    a. Sign Posted
    b. Application Photographs
3. Proposed Roof Information
4. Window Study
5. Building Inspector Letter
6. Original Architectural Drawings

LOCATION MAP

MEMORANDUM

DATE: May 4, 2016

TO: Chair and Members of the Historic Resources Preservation Board

FROM: Aimee N. Sunny, Preservation Planning Coordinator
Department of Community Sustainability

SUBJECT: **HRPB Project Number 16-00100092:** Consideration of a Certificate of Appropriateness (COA) for exterior alterations including roof, window, and door replacement for the single-family structure located at **402 North Lakeside Drive**; PCN# 38-43-44-21-15-428-0 010. The subject property was constructed in 1958 and is a non-contributing resource within the Old Lucerne Local Historic District.

HRPB Meeting Date: May 11, 2016

Per Section 23.5-4k(1) of the historic preservation ordinance, the Board shall use the following criteria in making a determination:

A. What is the effect of the proposed work on the landmark or the property upon which such work is to be done?
Response: It is the analysis of Staff that the work proposed would have an adverse effect on the historic appearance of the building, and is not compatible with the design or style.

B. What is the relationship between such work and other structures on the landmark site or other property in the historic district?
Response: The proposed work will have no direct physical effect on any surrounding properties within the surrounding Old Lucerne Local Historic District, however it will have an indirect visual effect on the district.

C. To what extent will the historic, architectural, or archaeological significance, architectural style, design, arrangement, texture, materials and color of the landmark or the property be affected?
Response: The project as proposed would have an adverse effect on the integrity of material and design of the building. The proposed roof replacement is not compatible with the architectural style and design of the structure.

D. Would denial of a certificate of appropriateness deprive the property owner of reasonable beneficial use of his property?
Response: The denial of this COA as submitted does not prevent the Applicant from proposing other alterations to the home, or re-roofing with an alternate recommended material.

E. Are the applicant's plans technically feasible and capable of being carried out within a reasonable time?
Response: Yes.

F. Do the plans satisfy the applicable portions of the general criteria contained in the United States Secretary of the Interior's Standards for Rehabilitation then in effect or as they may be revised from time to time? The current version of the Secretary's Guidelines provides as follows:

(1) A property shall be used for its historic purpose or be placed in a new use that requires minimal change to the defining characteristics of the building and its site and environment.
Response: No change to the use of the property is proposed.

(2) This historic character of the property shall be retained and preserved. The removal of historic materials or alteration of features and spaces that characterize a property shall be avoided.
Response: It is the analysis of Staff that the proposed roof material would alter the Mid-Century Modern Masonry Vernacular character of the structure by removing its character defining feature of a white concrete tile roof.

(3) Each property shall be recognized as a physical record of its time, place and use. Changes that create a false sense of historical development, such as adding conjectural features or architectural elements from other buildings, shall not be undertaken.
Response: Not applicable to this project.

(4) Most properties change over time; those changes that have acquired historic significance in their own right shall be retained and preserved.
Response: Not applicable to this project.

(5) Distinctive features, finishes and construction techniques or examples of craftsmanship that characterize a historic property shall be preserved.
Response: The roof is a distinctive feature of the structure, and the type of roof material used on the structure should be retained.

(6) Deteriorated architectural features shall be repaired rather than replaced, wherever possible. In the event replacement is necessary, the new material should match the material being replaced in composition, design, color, texture, and other visual qualities.
Response: The Application proposes to replace the existing white concrete tile roof with a dimensional asphalt shingle roof, which does not replicate the composition, design, color, or texture of the existing roof. Additionally, the Application proposed to replace the existing silver aluminum awning windows with white single-hung windows, which do not replicate the original windows in composition, design, color, texture, and other visual qualities.

Repair or replacement of missing architectural features should be based on accurate duplications of features, substantiated by historical, physical, or pictorial evidence rather than on conjectural designs or because the different architectural elements from other buildings or structures happen to be available for relocation.
Response: Not applicable to this project.

(7) Chemical or physical treatments, such as sandblasting, that cause damage to historic materials, shall not be used. The surface cleaning of structures, if appropriate, shall be undertaken using the gentlest means possible.
Response: Not applicable to this request.

(8) Significant archeological resources affected by a project shall be protected and preserved. If such resources must be disturbed, mitigation measures shall be undertaken.
Response: Not applicable to this project.

(9) New additions, exterior alterations or related new construction shall not destroy historic materials that characterize the property. The new construction shall be differentiated from the old and shall be compatible with the massing, size, scale and architectural features to protect the historic integrity of the property and its environment.
Response: Not applicable to this project.

(10) New additions and adjacent or related new construction shall be undertaken in such manner that, if removed in the future, the essential form and integrity of the historic building and its environment would be unimpaired.
Response: Not applicable to this project.

G. What are the effects of the requested change on those elements or features of the structure which served as the basis for its designation and will the requested changes cause the least possible adverse effect on those elements or features?
Response: It is the analysis of Staff that the historic character of the property would be adversely affected by the proposed project as submitted by the Applicant, as outlined above. The proposal does not represent the least possible adverse effect.

Section 23.5-4k(2). Additional guidelines for alterations.

In approving or denying applications for certificates of appropriateness for alterations, the HRPB shall also consider the following additional guidelines:

A. Is every reasonable effort being made to provide a compatible use for a property that requires minimal alteration of the building, structure or site and its environment, or to use the property for its originally intended purpose?
Response: No change to the use of the property is proposed.

B. Are the distinguishing original qualities or character of a building, structure or site and its environment being destroyed? The removal or alteration of any historic material or distinctive architectural features shall be avoided whenever possible.
Response: It is the analysis of Staff that the historic character of the property would be adversely affected by the proposed project as submitted by the Applicant, as outlined above. The proposal does not represent the least possible adverse effect.

C. When a certificate of appropriateness is requested to replace windows or doors, the HRPB shall permit the property owner's original design when the HRPB's alternative design would result in an increase in cost of thirty (30) percent above the owner's original cost. The owner shall be required to demonstrate to the HRPB that:
(1) The work to be performed will conform to the original window openings of the structure; and
Response: The application meets this criteria.

(2) That the replacement windows or doors with less expensive materials will achieve a savings in excess of thirty (30) percent over historically compatible materials otherwise required by this code.
Response: Staff will defer to the applicant.

03.29.2016 18:33

402

03 29 2016 18:37

03.29.2016 18:35

Hopper
03 29 2016 18:34

Check that the dotted lines forming the four color blocks are all visible with no gaps. If OK select (Yes) at the control panel.
If gaps are visible select (No) at the control panel to start the cleaning process and follow the prompts on the LCD.

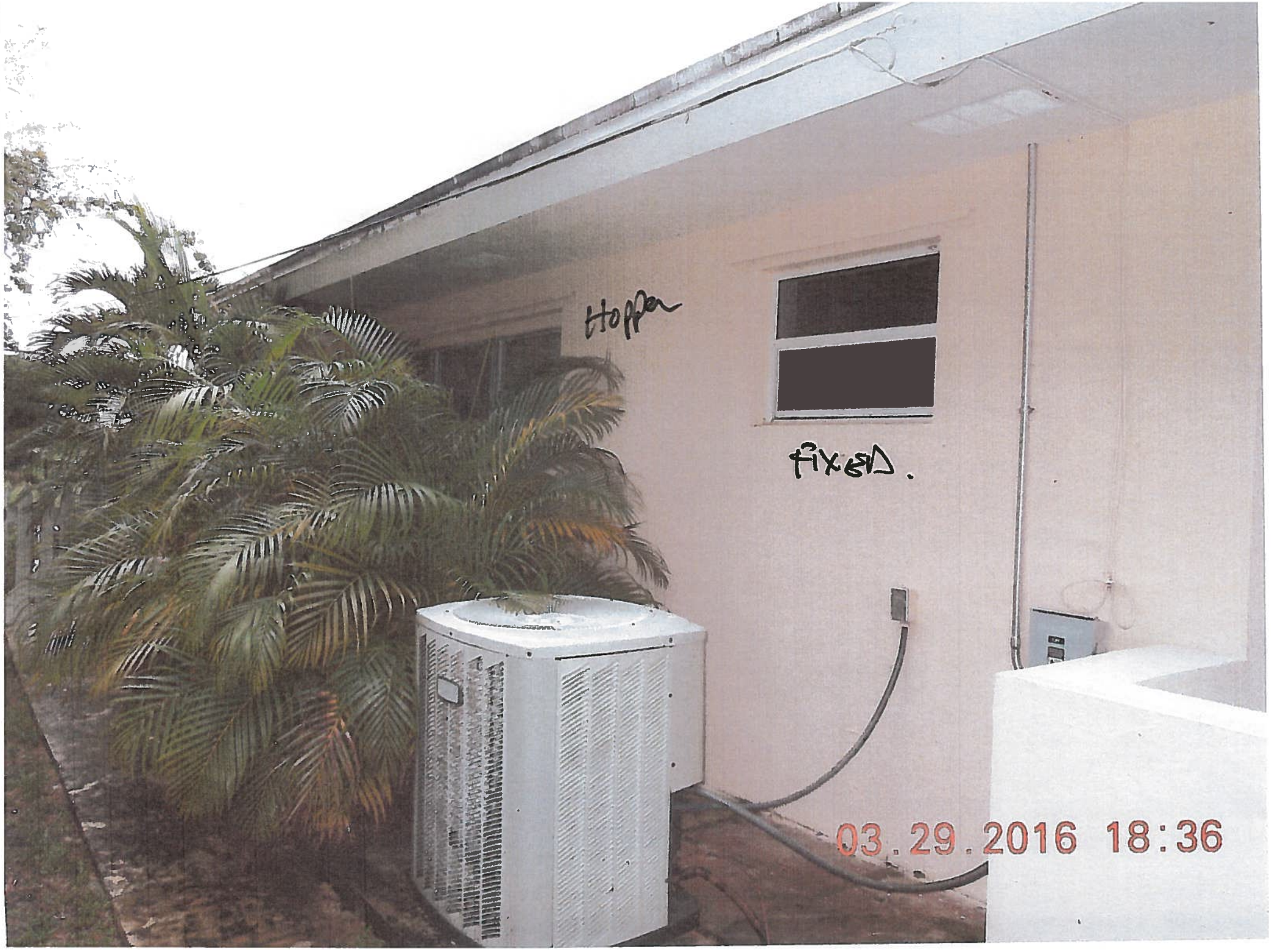
Hopper
fixed.
03.29.2016 18:36

03.29.2016 18:33

CASEMENT
CASEM
03.29.2016 18:36

MIAMI-DADE COUNTY
PRODUCT CONTROL SECTION
11805 SW 26 Street, Room 208
Miami, Florida 33175-2474
T (786) 315-2590 F (786) 315-2599
www.miamidade.gov/economy

DEPARTMENT OF REGULATORY AND ECONOMIC RESOURCES (RER)
BOARD AND CODE ADMINISTRATION DIVISION

NOTICE OF ACCEPTANCE (NOA)

GAF
1 Campus Drive
Parsippany, NJ 07054

SCOPE:

This NOA is being issued under the applicable rules and regulations governing the use of construction materials. The documentation submitted has been reviewed and accepted by Miami-Dade County RER - Product Control Section to be used in Miami Dade County and other areas where allowed by the Authority Having Jurisdiction (AHJ).

This NOA shall not be valid after the expiration date stated below. The Miami-Dade County Product Control Section (In Miami Dade County) and/or the AHJ (in areas other than Miami Dade County) reserve the right to have this product or material tested for quality assurance purposes. If this product or material fails to perform in the accepted manner, the manufacturer will incur the expense of such testing and the AHJ may immediately revoke, modify, or suspend the use of such product or material within their jurisdiction. RER reserves the right to revoke this acceptance, if it is determined by Miami-Dade County Product Control Section that this product or material fails to meet the requirements of the applicable building code.

This product is approved as described herein, and has been designed to comply with the Florida Building Code including the High Velocity Hurricane Zone of the Florida Building Code.

DESCRIPTION: GAF Timberline HD®, Timberline Natural Shadow®, and Timberline American Harvest® Shingles

LABELING: Each unit shall bear a permanent label with the manufacturer's name or logo, city, state and following statement: "Miami-Dade County Product Control Approved", unless otherwise noted herein.

RENEWAL of this NOA shall be considered after a renewal application has been filed and there has been no change in the applicable building code negatively affecting the performance of this product.

TERMINATION of this NOA will occur after the expiration date or if there has been a revision or change in the materials, use, and/or manufacture of the product or process. Misuse of this NOA as an endorsement of any product, for sales, advertising or any other purposes shall automatically terminate this NOA. Failure to comply with any section of this NOA shall be cause for termination and removal of NOA.

ADVERTISEMENT: The NOA number preceded by the words Miami-Dade County, Florida, and followed by the expiration date may be displayed in advertising literature. If any portion of the NOA is displayed, then it shall be done in its entirety.

INSPECTION: A copy of this entire NOA shall be provided to the user by the manufacturer or its distributors and shall be available for inspection at the job site at the request of the Building Official.

This NOA revises NOA 13-0419.04 and consists of pages 1 through 6.
The submitted documentation was reviewed by Juan E. Collao, R.A.

MIAMI-DADE COUNTY APPROVED

Juan E. Collao

ROOFING ASSEMBLY APPROVAL

Category: Roofing
Sub-Category: Asphalt Shingles
Materials: Laminate
Deck Type: Wood

SCOPE

This approves **GAF Timberline HD®, Timberline Natural Shadow®, and Timberline American Harvest® Shingles** as manufactured by GAF as described in Section 2 of this Notice of Acceptance.

PRODUCT DESCRIPTION

Product	Dimensions	Test Specifications	Product Description
GAF Timberline HD® *Manufacturing Locations* **#1, 2, 3, 4, 5, 6, 7**	13 $^{1}/_{4}$" x 39 $^{3}/_{8}$"	TAS 110	Fiberglass reinforced heavy weight asphalt roof shingle, with a laminate profile
GAF Timberline Natural Shadow® *Manufacturing Locations* **#1, 2, 3, 4, 5, 6, 7**	13 $^{1}/_{4}$" x 39 $^{3}/_{8}$"	TAS 110	Fiberglass reinforced heavy weight asphalt roof shingle, with a laminate profile
GAF Timberline American Harvest® *Manufacturing Locations* **#2, 4, 5, 6**	13 $^{1}/_{4}$" x 39 $^{3}/_{8}$"	TAS 110	Fiberglass reinforced heavy weight asphalt roof shingle, with a laminate profile

MANUFACTURING LOCATION

1. Tampa, FL
2. Michigan City, IN
3. Baltimore, MD
4. Myerstown, PA
5. Ennis, TX
6. Tuscaloosa, AL
7. Dallas, TX

EVIDENCE SUBMITTED

Test Agency	Test Identifier	Test Name/Report	Date
Underwriters Laboratories, Inc.	ASTM D3462	11CA48924	10/24/11
Underwriters Laboratories, Inc	ASTM D3462	10CA21994	04/22/11
Underwriters Laboratories, Inc	ASTM D3462	10CA28717	07/26/11
Underwriters Laboratories, Inc.	ASTM D3462	05CA47541	11/10/06
Underwriters Laboratories, Inc.	ASTM D3462	06CA31580	11/30/06
PRI Asphalt Technologies, Inc.	ASTM D3462	GAF-101-02-02	11/02/05
Underwriters Laboratories, Inc.	ASTM D3462	06NK05159	08/09/06
PRI Asphalt Technologies, Inc.	ASTM D3462	GAF-098-02-02	11/08/05
Underwriters Laboratories, Inc.	ASTM D3462	02NK41809	08/11/02
Underwriters Laboratories, Inc.	ASTM D3462	03NK26444	10/17/03
Center for Applied Engineering	ASTM D3462	257989	05/13/97
Underwriters Laboratories, Inc.	TAS 107	01NK45803	04/13/94
Underwriters Laboratories, Inc.	TAS 107	06NK05159	08/09/06
Underwriters Laboratories, Inc.	TAS 107	04NK04273	02/20/04
Underwriters Laboratories, Inc.	TAS 107	05CA42840	11/11/05
Underwriters Laboratories, Inc.	TAS 107	02NK41811	11/11/02
Underwriters Laboratories, Inc.	TAS 107	03CA35209	10/17/03
Underwriters Laboratories, Inc.	TAS 107	04CA13850	08/30/04
Center for Applied Engineering	TAS 100	257989	04/01/97
PRI Asphalt Technologies, Inc.	TAS 100	GAF-044-02-01	01/13/04
PRI Asphalt Technologies, Inc.	TAS 100	GAF-098-02-01	11/08/05
PRI Asphalt Technologies, Inc.	TAS 100	GAF-101-02-01	11/09/05
PRI Asphalt Technologies, Inc.	TAS 100	GAF-116-02-02	03/23/06
PRI Asphalt Technologies, Inc.	TAS-100	ELK-083-02-01	10/16/02
		ELK-084-02-01	10/15/02
		ELK-085-02-01	10/14/02
		ELK-086-02-01	10/24/02
		ELK-087-02-01	10/21/02
		ELK-088-02-01	10/16/02
		ELK-107-02-01	10/09/03
		ELK-108-02-01	10/09/03
		ELK-109-02-01	10/09/03

LIMITATIONS

1. Fire classification is not part of this acceptance; refer to a current Approved Roofing Materials Directory for fire ratings of this product.
2. Shall not be installed on roof mean heights in excess of 33 ft.
3. All products listed herein shall have a quality assurance audit in accordance with the Florida Building Code and Rule 61G20-3 of the Florida Administrative Code.

INSTALLATION

1. Shingles shall be installed in compliance with Roofing Application Standard RAS 115.
2. Flashing shall be in accordance with Roofing Application Standard RAS 115
3. The manufacturer shall provide clearly written application instructions.
4. Exposure and course layout shall be in compliance with Detail 'A', attached.
5. Nailing shall be in compliance with Detail 'B', attached.

LABELING

Shingles shall bear the imprint or identifiable marking of the manufacturer's name or logo, city and state of manufacturing facility, and following statement: "Miami-Dade County Product Control Approved" or the Miami-Dade County Product Control Seal as shown below.

MIAMI-DADE COUNTY
APPROVED

BUILDING PERMIT REQUIREMENTS

1. Application for building permit shall be accompanied by copies of the following:
   - **1.1** This Notice of Acceptance.
   - **1.2** Any other documents required by the Building Official or the applicable code in order to properly evaluate the installation of this system.

DETAIL A
COURSE LAYOUT

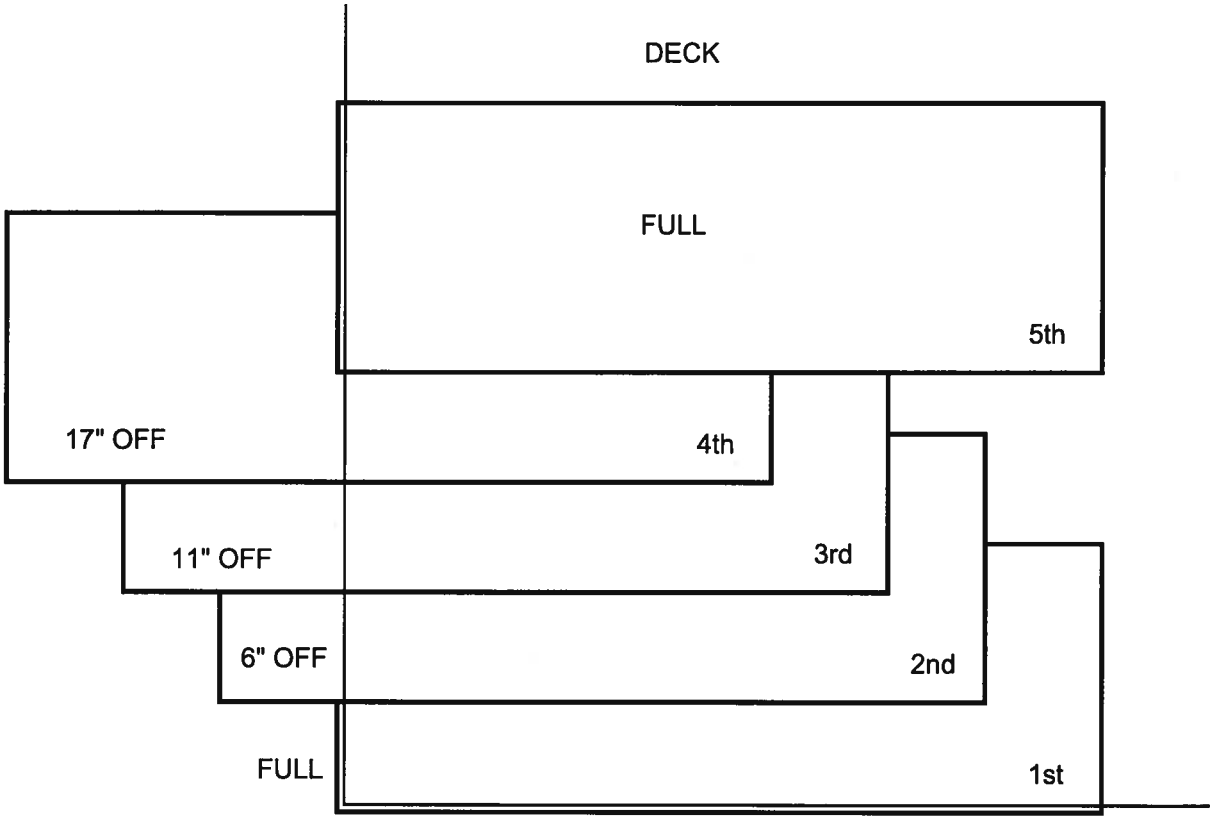

DETAIL B
OVERALL DIMENSIONS AND NAILING PATTERN

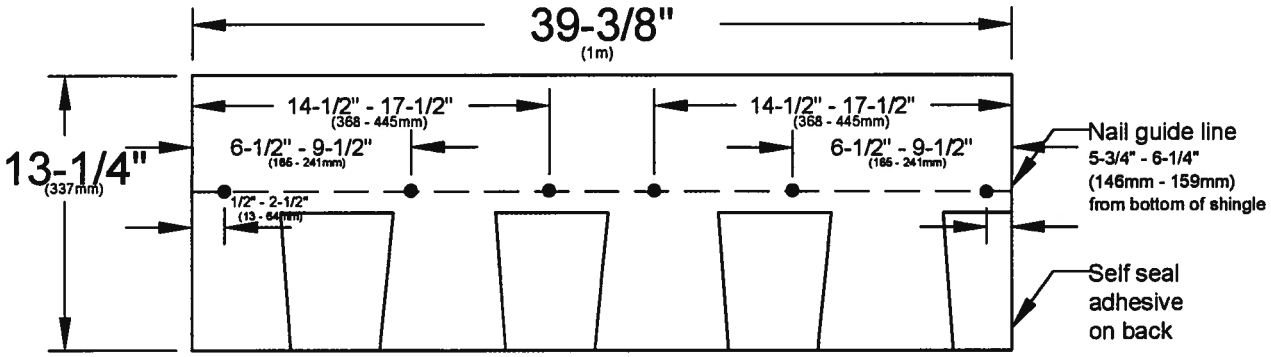

ENHANCED NAILING PATTERN - six nails per shingle*

* required by some local codes and required for enhanced wind coverage on certain products.
See limited warranty for details.

These shingles MUST be nailed a nominal 6" (152mm) from bottom of of shingle, above the cut outs, as shown. Nails must **not** be exposed.

END OF THIS ACCEPTANCE

April 16, 2016

WINDOW STUDY FOR 402 NORTH LAKESIDE DRIVE, LAKE WORTH, FL

EXISTING WINDOWS ARE ALL AWNING WINDOWS WITH ALUMINUM FINISH, SOME WINDOWS WERE PREVIOUSLY REPLACED AND ARE WHITE ALUMINUM.

MISSION: FIND A REPLACEMENT WINDOW THAT WILL NOT CHANGE THE EXISTING OPENING, WILL EMPHASIZE THE HORIZONTAL LINE IMMITATING THE ORIGINAL.

THE 34 AWNING IS THE PIVITOL ISSUE. THIS WINDOW OCCURS IN THE BREAKFAST AREA AT THE FRONT OF THE HOUSE AND TWO OF THE BEDROOMS. IT HAS THREE HORIZONTAL PANES.

THE 34 WINDOW DIMENTIONS DO NOT MEET EGRESS UNLESS IT IS A HORIZONTAL ROLLER. WE WERE TOLD WE COULD NOT HAVE VERTICAL ELEMENTS BY THE CITY, SO THIS RULES OUT HORIZONTAL ROLLERS.

THE SWING IS TOO GREAT FOR CASEMENT.

AWNING WINDOWS THIS SIZE HAVE A MECHANIZM ON THE BOTTOM FOR FUNCTION THAT WOULD NOT ALLOW FOR EGRESS.

SINGLE HUNG IS THE ONLY OPTION COMING CLOSE. THE 34 STILL DOES NOT MEET EGRESS, BUT WE MISS EGRESS REQUIREMTNS BY ½" COMING MUCH CLOSER TO THE REQUIREMENT AND IMPROVING ON THE EXISTING EGRESS OPENING.

AS A COMPROMISE, THE 22 AND 32 COULD REMAIN AWNING TYPE, BUT THE REMAINING WINDOWS WOULD WORK BEST AS SINGLE HUNG WITH HORZONTAL MUNTINS.

THE ISSUE OF THE SCREEN AND THE DIFFERENCE IN APPEARANCE WAS DISCUSSED. PERHAPS A SLIGHTLY DARKER TINT ON THE UPPER WINDOWS WOULD OFFSET THE IMPACT THE SCREEN HAS ON THE VISIBLE APPEARANCE.

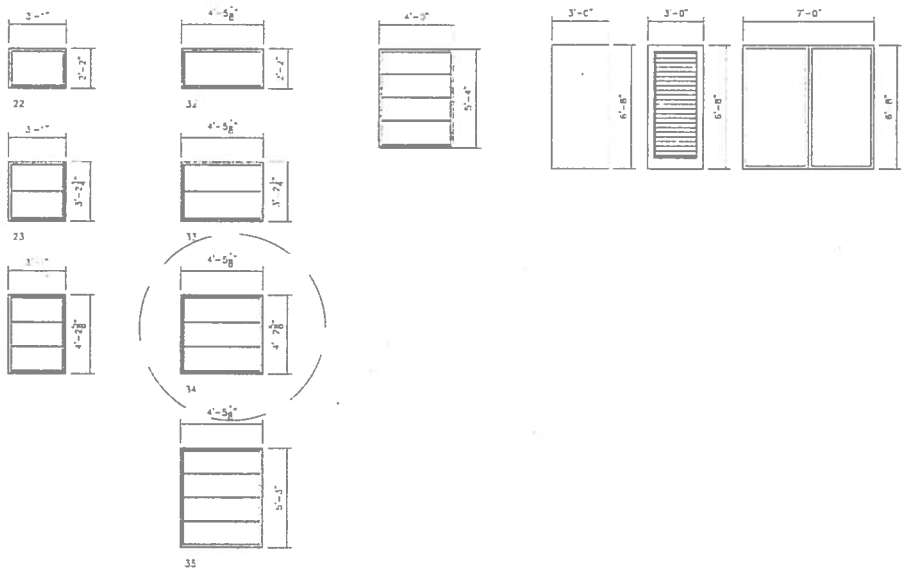

EXISTING

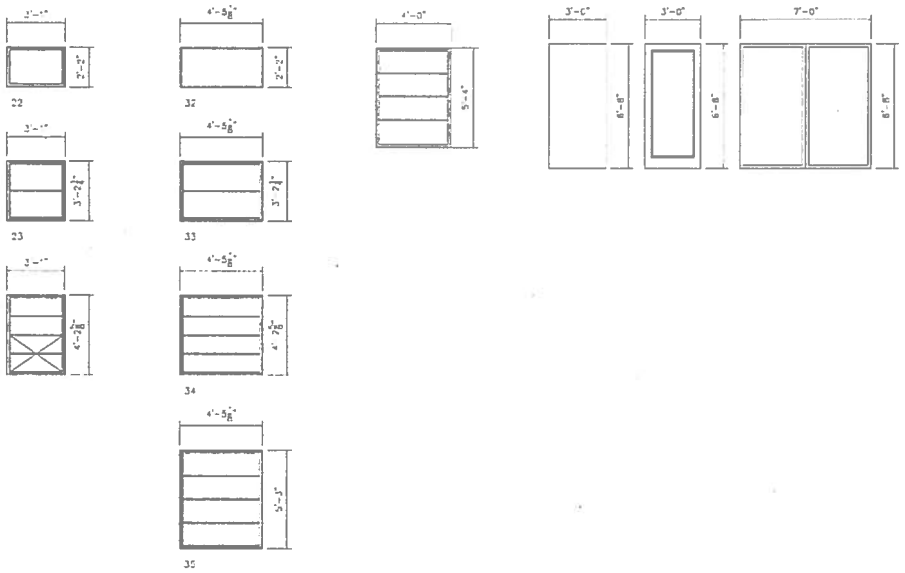

PROPOSED

Window & Door Grid Patterns

Standard grid patterns are published in our brochures for windows and doors. Non-standard grid patterns for rectangles.

Basic principles for understanding window and door nomenclature:

- All grid patterns are viewed from exterior
- All grid patterns are viewed from the left to right
- All grid patterns start with the width followed by the height
- All grid patterns for Single Hung windows start with the Top Lite followed by the Bottom Lite

Window & Door Grid Patterns

Picture Windows

Grid Pattern 3 x 3

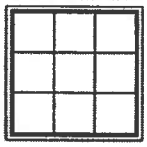

Grid Pattern 3 x 5

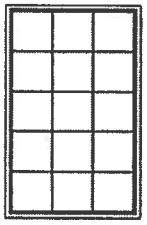

Grid Pattern 1 x 5

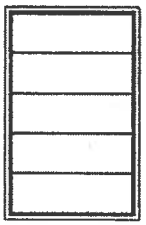

Single Hung Windows

Grid Pattern 3 x 2 / FV

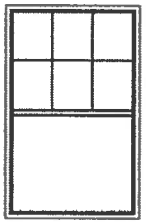

Grid Pattern 2 x 3 / FV

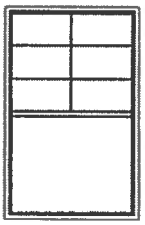

Grid Pattern 2 x 1 / FV

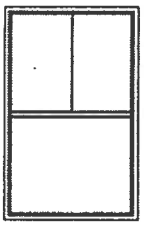

Grid Pattern 2 x 2 / 2 x 2

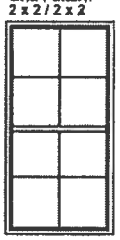

Grid Pattern 2 x 1 / 2 x 1

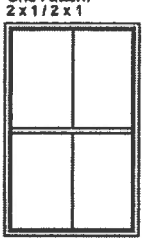

Grid Pattern 1 x 2 / 1 x 2

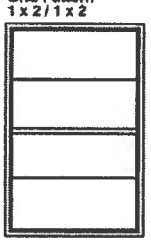

Casements, Horizontal Sliders & Sliding & Swing Doors

Grid Pattern 3 x 3 / 3 x 3

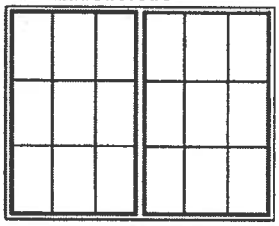

Grid Pattern 2 x 2

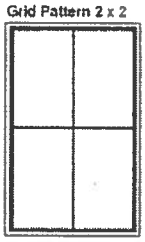

Grid Pattern 1 x 3 / 1 x 3

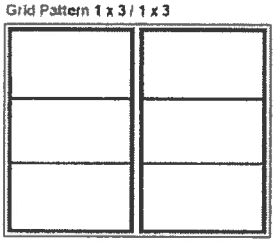

Grid Pattern 3 x 5

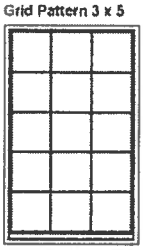

Grid Pattern 2 x 3 / 2 x 3

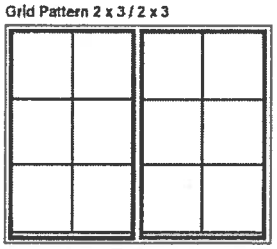

Grid Pattern 2 x 2

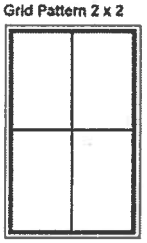

Grid Pattern 1 x 2 / 1 x 2

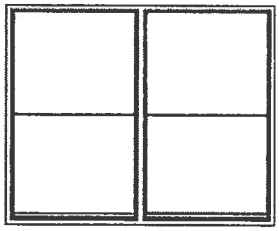

Grid Pattern 3 x 5

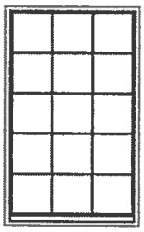

Grid Pattern 2 x 1 / 2 x 1

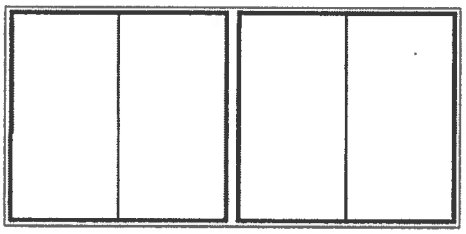

Grid Pattern 3 x 5 / 3 x 5

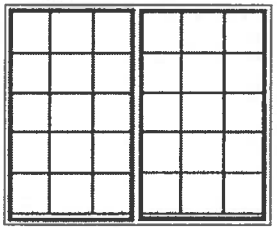

Aimee Sunny, Historic Planner
Department of Community Sustainability
City of Lake Worth
1900 2nd Ave North
Lake Worth FL 33461

RE: Asphalt Shingle Damage

Ms. Sunny:

As per our discussion, the damage to asphalt roofing shingles from a golf ball strike is very similar to that of hail damage. The only difference is in pattern of strikes, and the fact that most insurance will not cover golf ball damage.

An asphalt shingle is basically an asphalt coated fiberglass mat, covered by ceramic coated granules. When struck by a hailstone (or golf ball), depending on the size and speed of the strike, the shingle is "bruised." This can loosen the granules and sometimes even cut the fiberglass mat. Often the extent of the damage is not immediately evident. As the granules fall out, the asphaltic matrix is weakened allowing water intrusion and associated damage.

I hope this clarifies the issue. If you need have further questions, or are in need of additional information, please feel free to contact me.

Sincerely,

Richard Jones, CBO, CFM, LEED-AP
Building Inspector/Plan Reviewer
Department for Community Sustainability
City of Lake Worth
1900 2nd Ave North
Lake Worth FL 33461

(561) 586-1647
rjones@lakeworth.org

Florida has a very broad public records law. Most written communication to or from local officials regarding City business is considered public records and available to the public and media upon request. Your e-mail communications may therefore be subject to public disclosure.

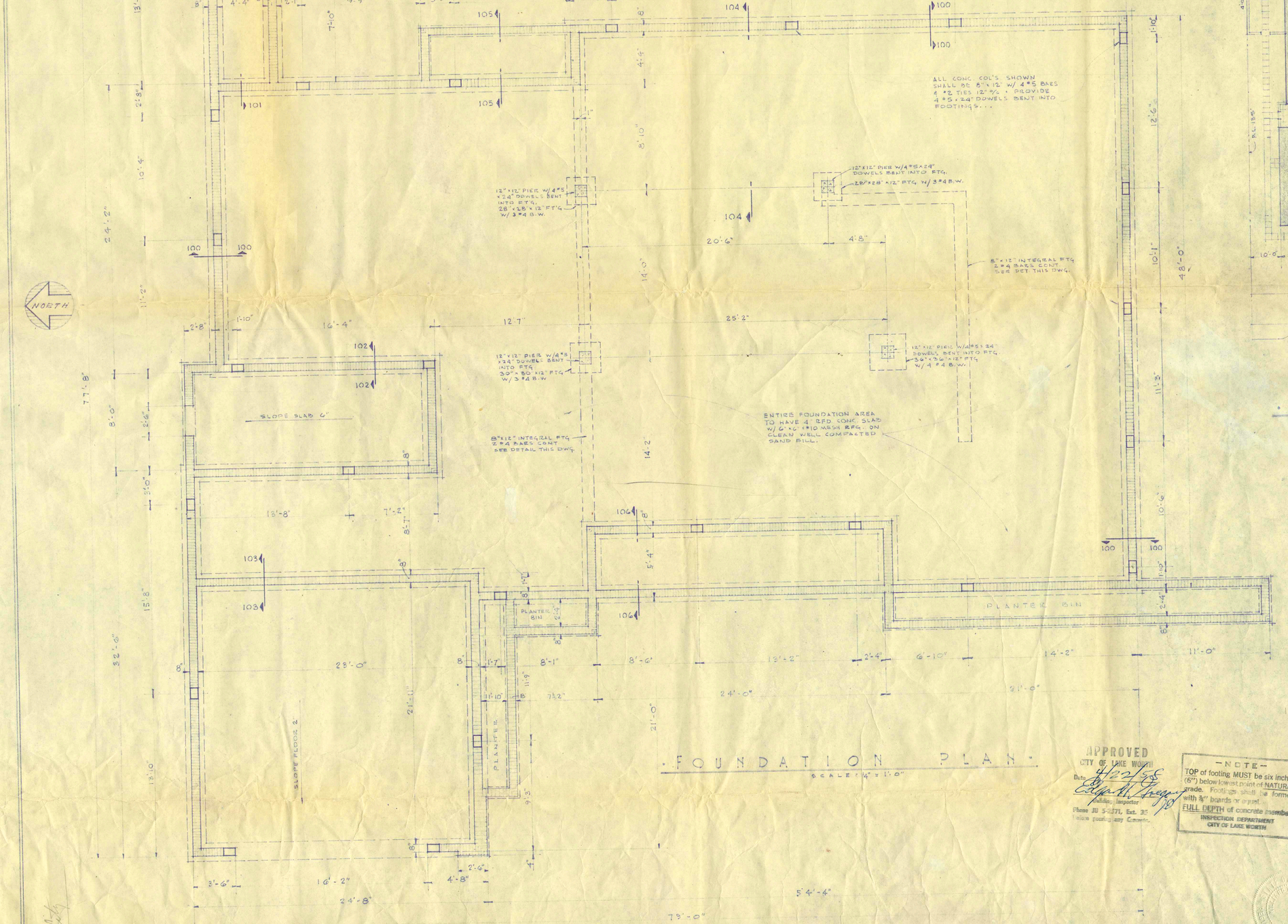

·PLOT PLAN·

SCALE: 1/16" = 1'-0"

·FOUNDATION PLAN·

SCALE: 1/4" = 1'-0"

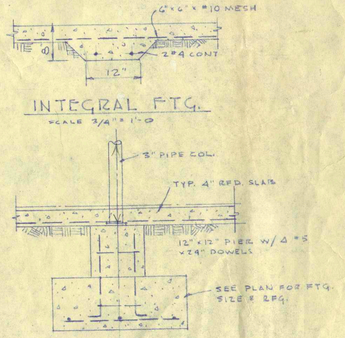

INTEGRAL FTG.

SCALE 3/4" = 1'-0

TYPICAL PIPE COL. FOOTING

SCALE 3/4" = 1'-0"

APPROVED
CITY OF LAKE WORTH
Date 4/21/58
Edgar H. Gregory
Building Inspector
Phone JU 5-2371, Ext. 35
Notify before pouring any Concrete.

—NOTE—
TOP of footing MUST be six inches (6") below lowest point of NATURAL grade. Footings shall be formed with ¾" boards or equal.
FULL DEPTH of concrete member.
INSPECTION DEPARTMENT
CITY OF LAKE WORTH

RESIDENCE
FOR
MR. & MRS. GILBERT A.
NORTH LAKESIDE DR
LAKE WORTH, FLO

DRAWN BY D. & L. Allard J. S

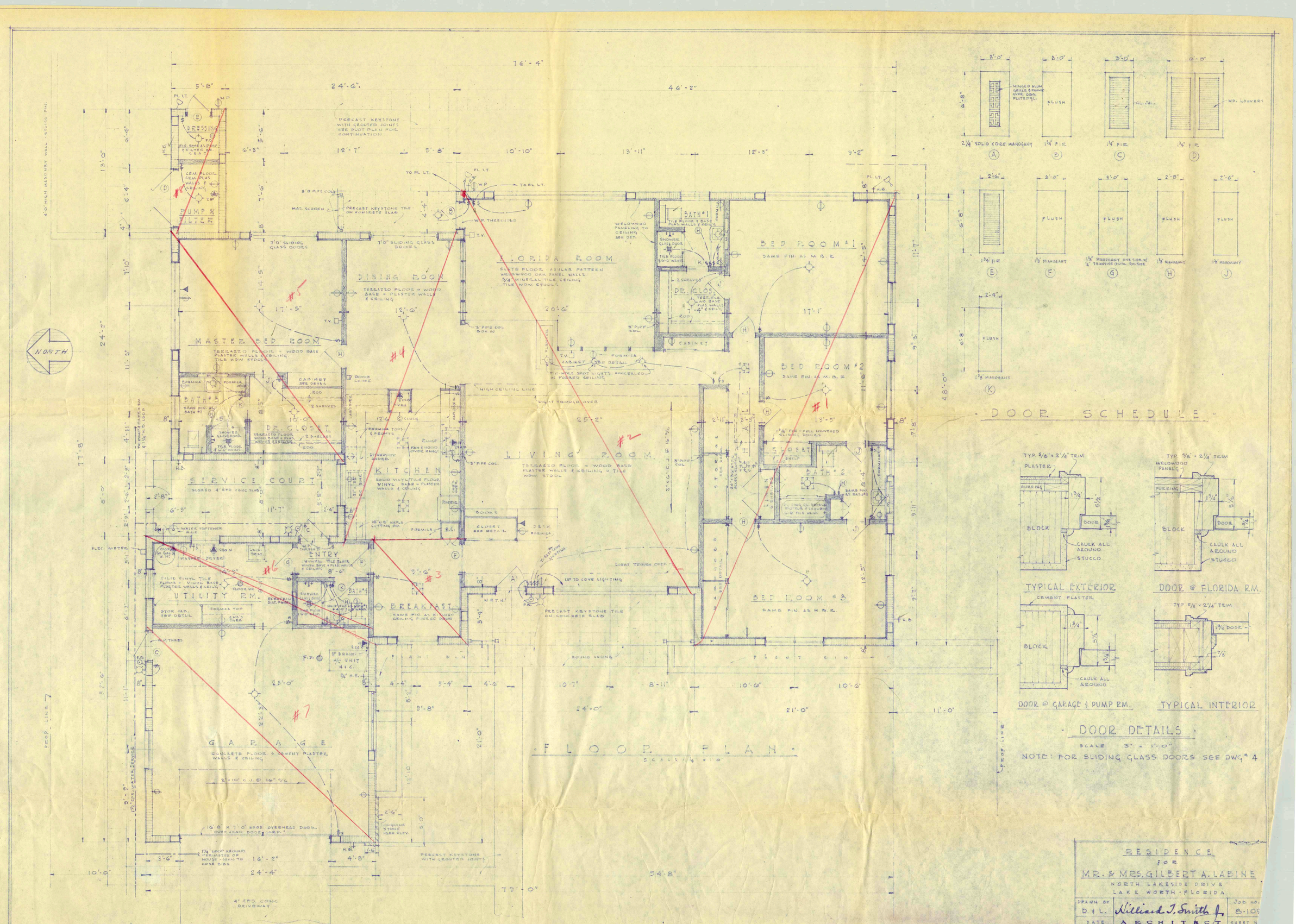
NORTH
DRESSING
PUMP & FILTER
MASTER BED ROOM
BATH #3
DR. CLOSET
SERVICE COURT
UTILITY RM.
GARAGE
DINING ROOM
FLORIDA ROOM
KITCHEN
ENTRY
BREAKFAST
LIVING ROOM
BATH #1
DR. CLOS.
BED ROOM #1
BED ROOM #2
BED ROOM #3
CLOSET
BATH #2
FLOOR PLAN
DOOR SCHEDULE
DOOR DETAILS
TYPICAL EXTERIOR
DOOR @ FLORIDA RM.
DOOR @ GARAGE & PUMP RM.
TYPICAL INTERIOR
NOTE: FOR SLIDING GLASS DOORS SEE DWG. 4
RESIDENCE FOR MR. & MRS. GILBERT A. LABINE
NORTH LAKESIDE DRIVE
LAKE WORTH · FLORIDA
DRAWN BY D.I.L.
Hilliard T. Smith Jr.
ARCHITECT
MEMBER OF THE AMERICAN INSTITUTE OF ARCHITECTS
DATE APRIL 1955
JOB NO. 8-109
SHEET NO. 2 OF 6

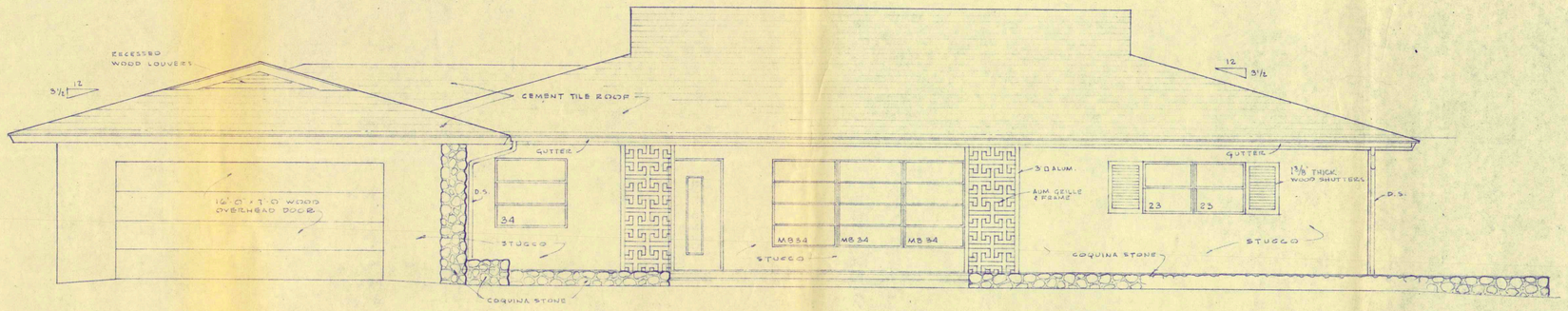

FRONT ELEVATION
SCALE 1/4" = 1'-0"

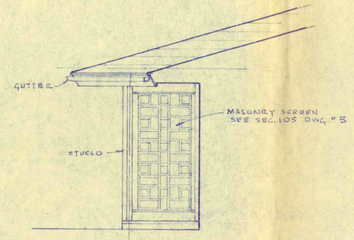

NORTH ELEV. - REAR PORCH
SCALE 1/4" = 1'-0"

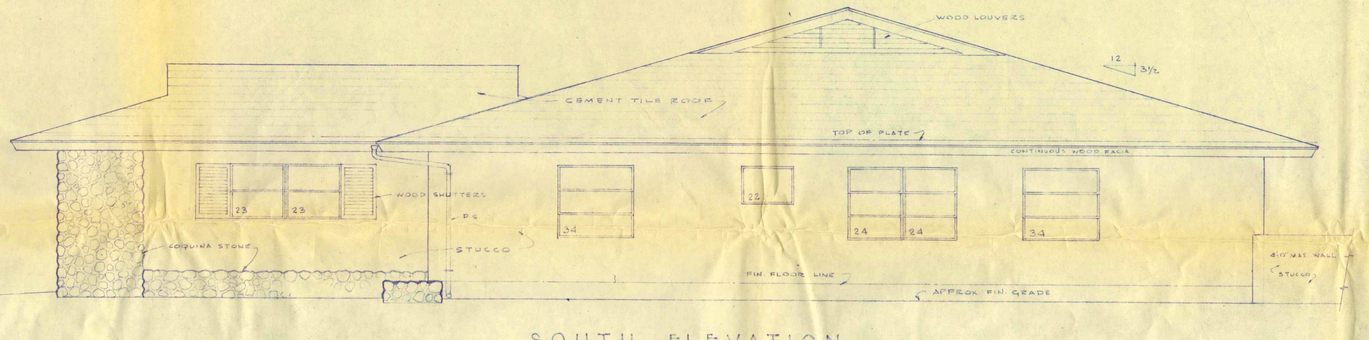

SOUTH ELEVATION
SCALE 1/4" = 1'-0"

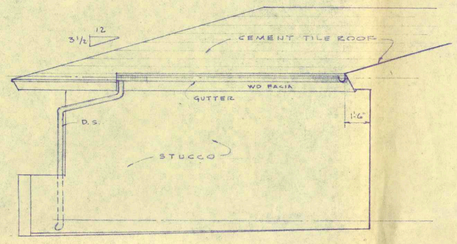

EAST WALL

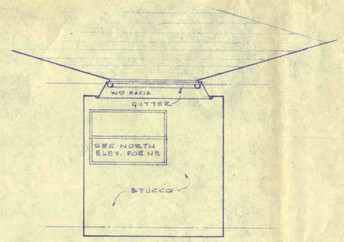

SOUTH WALL

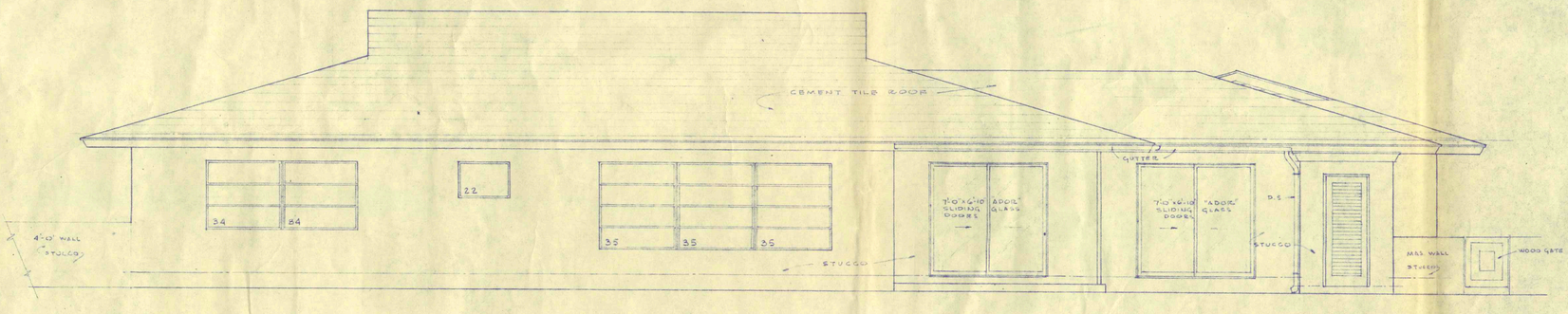

EAST ELEVATION
SCALE 1/4" = 1'-0"

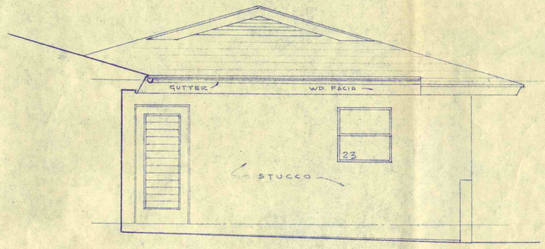

WEST WALL

SERVICE COURT ELEVATIONS
SCALE 1/4" = 1'-0"

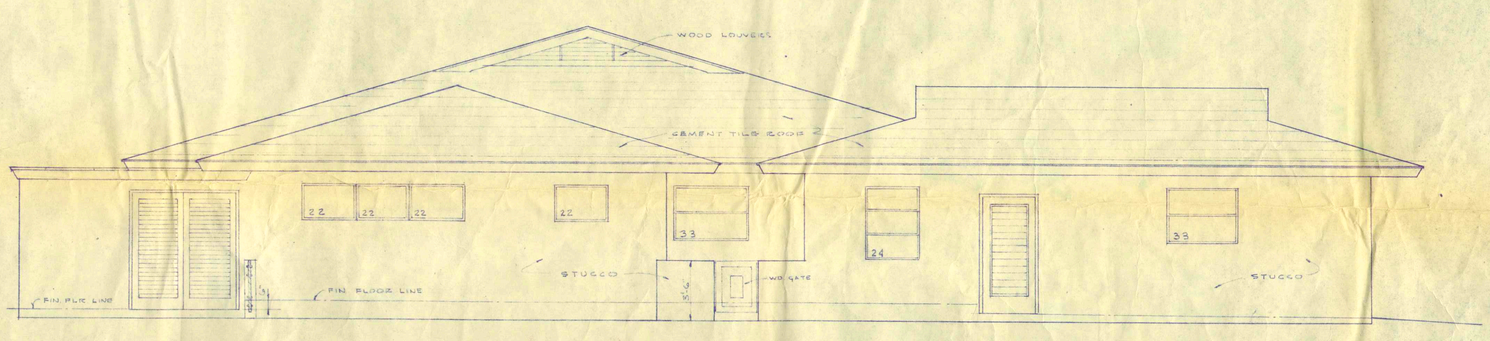

NORTH ELEVATION
SCALE 1/4" = 1'-0"

RESIDENCE
FOR
MR. & MRS. GILBERT A. LABINE
NORTH LAKESIDE DRIVE
LAKE WORTH • FLORIDA

DRAWN BY D.L.L.	Willard J. Smith ARCHITECT	JOB NO. 8-109
DATE APRIL • 1958	MEMBER OF THE AMERICAN INSTITUTE OF ARCHITECTS	SHEET NO 3 OF 6

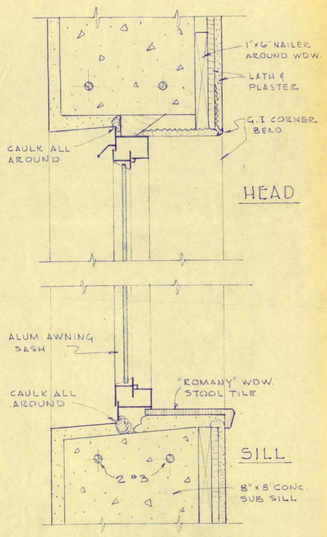

TYPICAL WINDOW DETAIL

SCALE 3" = 1'-0"

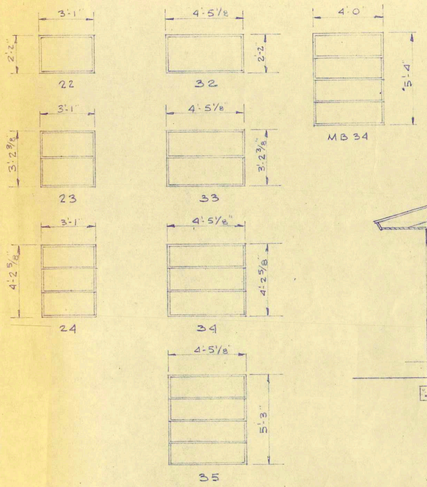

ALL WINDOWS TO BE ALUMINUM AWNING TYPE, AS SPECIFIED

WINDOW SCHEDULE

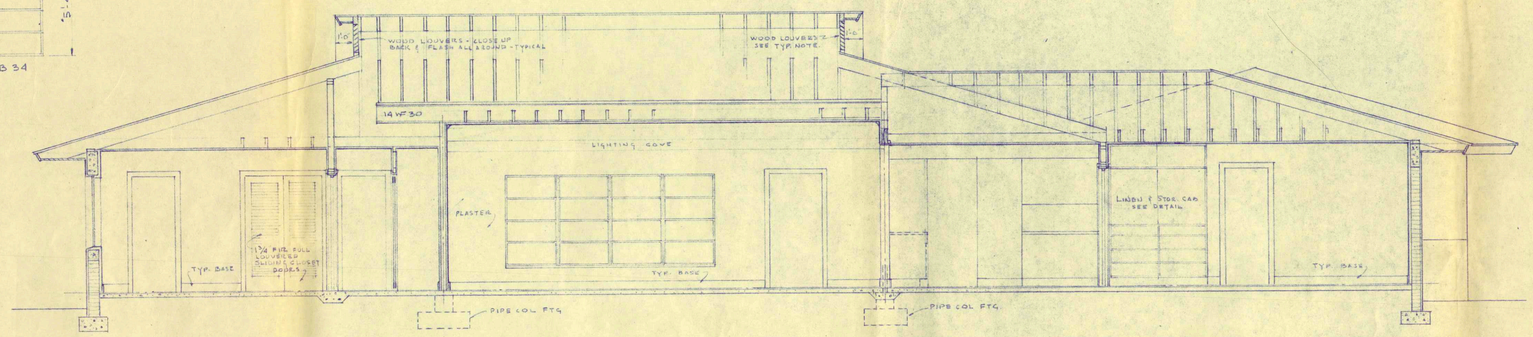

LONGITUDINAL SECTION 'A-A'

SCALE 1/4" = 1'-0"

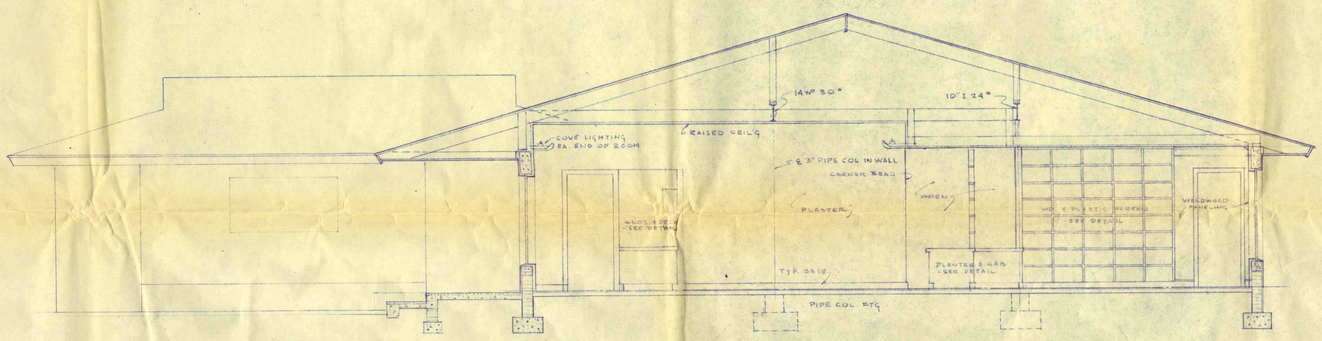

TRANSVERSE SECTION 'B-B'

SCALE 1/4" = 1'-0"

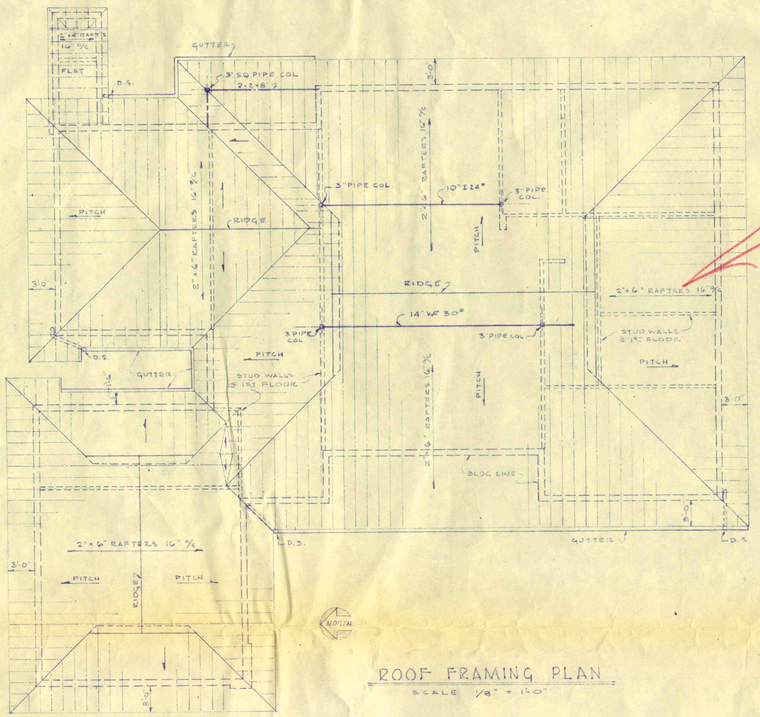

ROOF FRAMING PLAN

SCALE 1/8" = 1'-0"

Rafters 2X8-16 O.C as in addenda

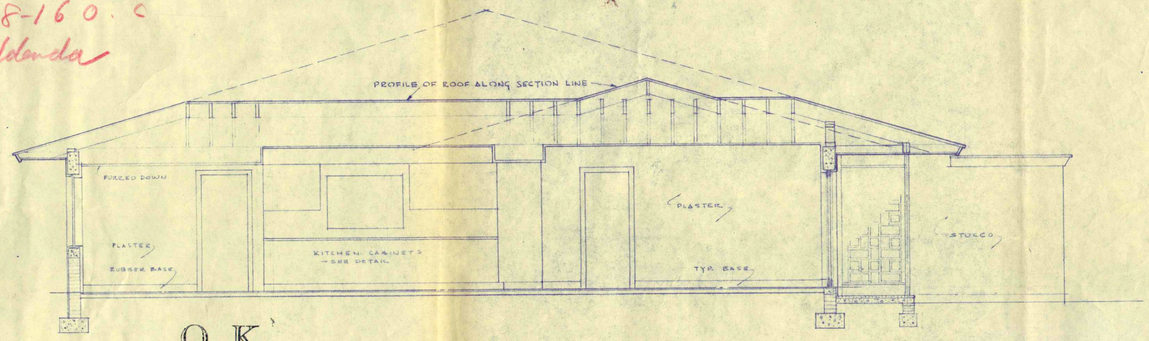

O. K.
ELECTRICAL INSPECTOR
4-23-58
R. Mac-m

TRANSVERSE SECTION 'C-C'

SCALE

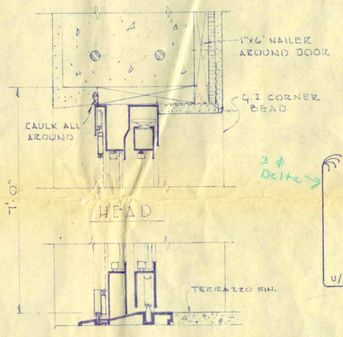

SLIDING GLASS DOOR

SCALE 3" = 1'-0"

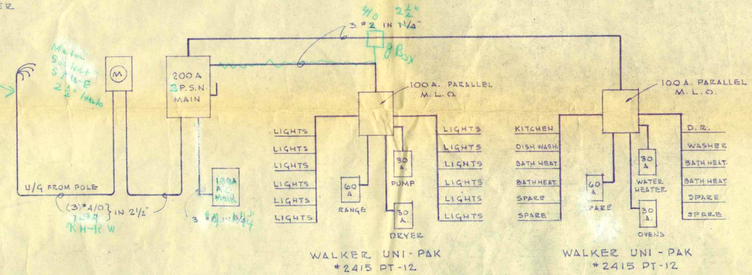

ELECTRIC RISER DIAGRAM

NO SCALE

RESIDENCE
FOR
MR. & MRS. GILBERT A. LABINE
NORTH LAKESIDE DRIVE
LAKE WORTH • FLORIDA

DRAWN BY D.L.L.	Hilland T. Smith A.I.A. ARCHITECT	JOB NO. 8-109
DATE APRIL • 1958	MEMBER OF THE AMERICAN INSTITUTE OF ARCHITECTS	SHEET NO. 4 OF 6

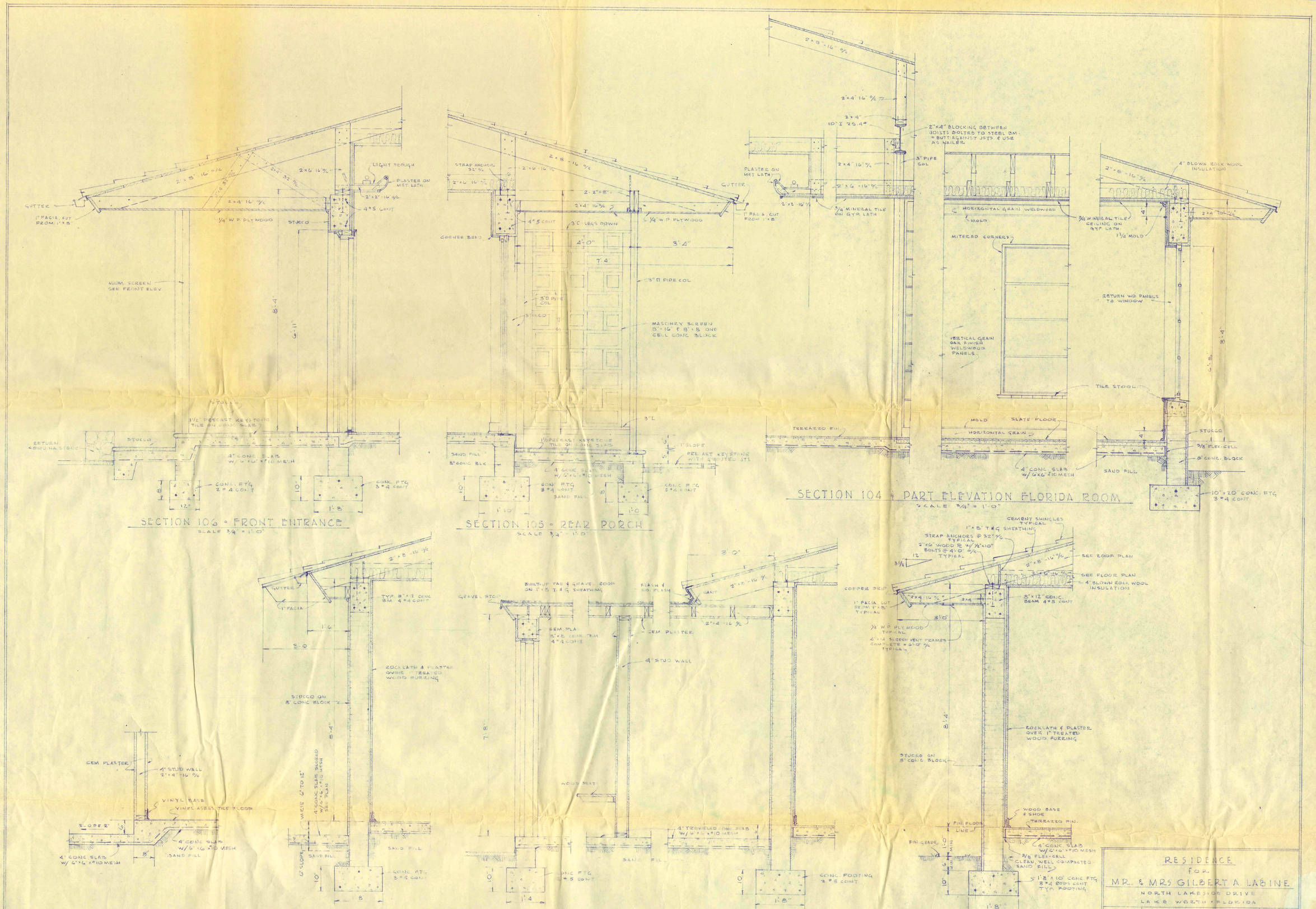
SECTION 106 • FRONT ENTRANCE
SCALE 3/4" = 1'-0"
SECTION 105 • REAR PORCH
SCALE 3/4" = 1'-0"
SECTION 104 • PART ELEVATION FLORIDA ROOM
SCALE 3/4" = 1'-0"
SECTION 103 • GARAGE & UTIL. RM.
SCALE 3/4" = 1'-0"
SECTION 102 • SERVICE COURT
SCALE 3/4" = 1'-0"
SECTION 101 • PUMP RM & DRESSING
SCALE 3/4" = 1'-0"
SECTION 100 • TYPICAL
SCALE 3/4" = 1'-0"
RESIDENCE
FOR
MR. & MRS GILBERT A. LABINE
NORTH LAKESIDE DRIVE
LAKE WORTH • FLORIDA
DRAWN BY DLL
DATE APRIL 1958
Hilliard T. Smith Jr
ARCHITECT
MEMBER OF THE AMERICAN INSTITUTE OF ARCHITECTS
JOB NO. 8-109
SHEET NO 5 OF 6

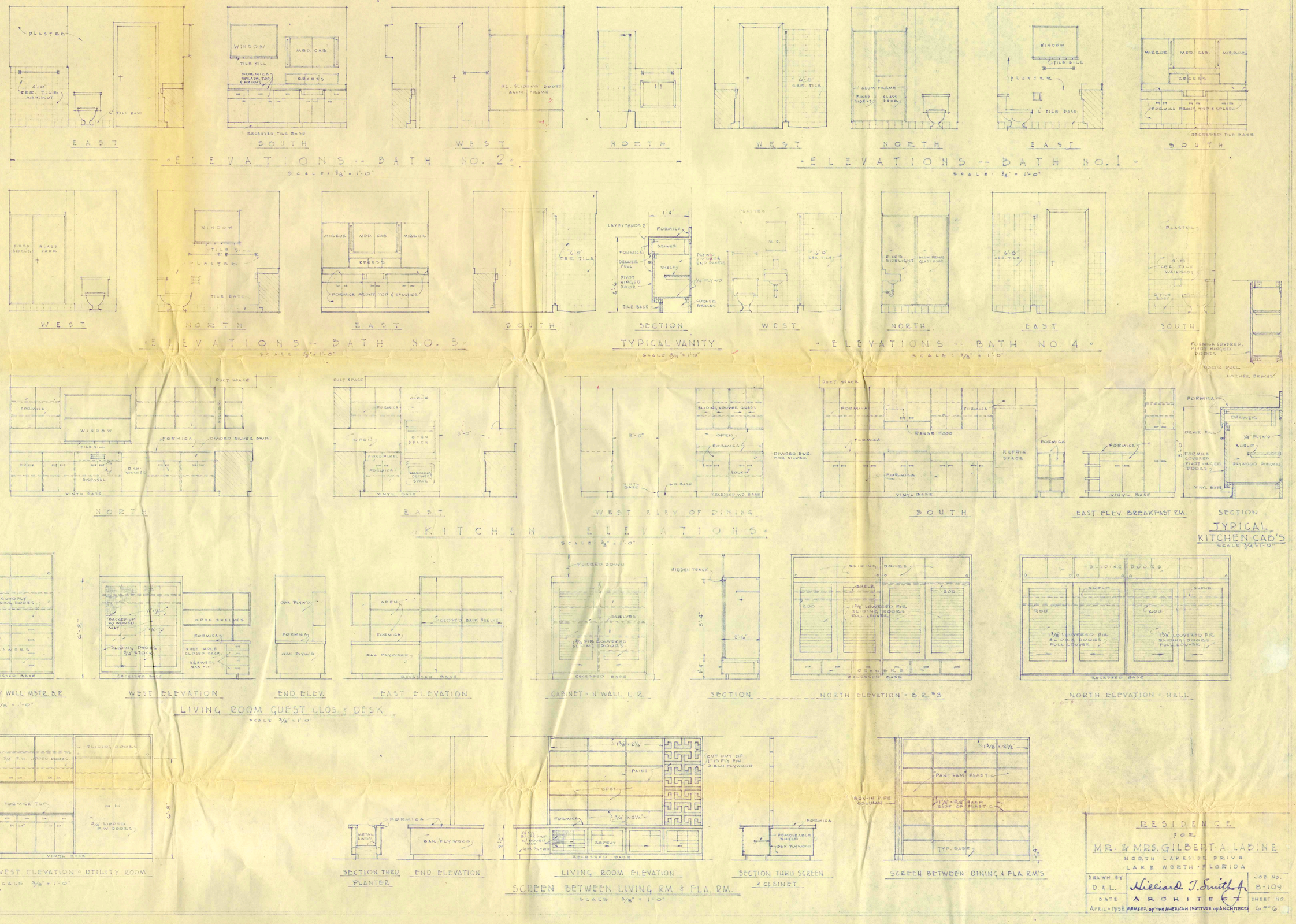
PLASTER
4'-0" CER. TILE WAINSCOT
6" TILE BASE
EAST
WINDOW
MED. CAB.
TILE SILL
FORMICA SPLASH, TOP & CREDENZA
RECESS
RECESSED TILE BASE
SOUTH
ALL SLIDING DOORS ALUM. FRAME
WEST
NORTH
ELEVATIONS -- BATH NO. 2
SCALE: 3/8" = 1'-0"
6'-0" CER. TILE
ALUM. FRAME
FIXED SIDELIT
GLASS DOOR
MIRROR
FORMICA FRONT, TOP & SPLASHES
ELEVATIONS -- BATH NO. 1
FIXED SIDELIT
GLASS DOOR
ELEVATIONS -- BATH NO. 3
SECTION
TYPICAL VANITY
SCALE 3/4" = 1'-0"
LAV. EXTENDS 2"
FORMICA
DRAWER
DRAWER PULL
PIVOT HINGED DOOR
PLYWOOD DIVIDER & END PANELS
SHELF
1/4" PLYWD
CORNER BRACES
TILE BASE
PLASTER
W.C.
ELEVATIONS -- BATH NO. 4
4'-0" CER. TILE WAINSCOT
6" TILE BASE
FORMICA COVERED, PIVOT HINGED DOORS
DOOR PULL
CORNER BRACES
DUCT SPACE
FORMICA
WINDOW
TILE SILL
DIVIDED SILVER DWR.
DISPOSAL
DISH-WASHER
VINYL BASE
NORTH
CLOCK
OPEN
OVEN SPACE
FIXED PANEL
WARMING DRAWER SPACE
EAST
SLIDING LOUVER GLASS
DIVIDED DWR. FOR SILVER
LOCK
W.O. BASE
RECESSED W.O. BASE
WEST ELEV. OF DINING
RANGE HOOD
REFRIG. SPACE
SOUTH
EAST ELEV. BREAKFAST RM.
KITCHEN ELEVATIONS
SCALE: 3/8" = 1'-0"
SECTION
TYPICAL KITCHEN CAB'S
SCALE 3/4" = 1'-0"
3/4 NOMPLY SLIDING DOORS
DRAWERS
RECESSED BASE
CABINET - W. WALL MSTR. B.R.
SCALE 3/8" = 1'-0"
BACKED UP W/ WOVEN MAT
SLIDING DOORS 3/4 STOCK
OPEN SHELVES
KNEE HOLE CLOSED BACK
DRAWERS OAK FIN
WEST ELEVATION
OAK PLYWD
END ELEV.
OAK PLYWOOD
EAST ELEVATION
CLOSED BACK SHELVES
FURRED DOWN
SHELVES
1 3/8 FIR LOUVERED SLIDING DOORS
CABINET - N. WALL L. R.
HIDDEN TRACK
SECTION
SLIDING DOORS
SHELF
ROD
1 3/8 LOUVERED FIR SLIDING DOORS FULL LOUVER
NORTH ELEVATION - B.R. #3
NORTH ELEVATION - HALL
LIVING ROOM GUEST CLOS. & DESK
SCALE 3/8" = 1'-0"
3/8 P.W. LIPPED DOORS
FORMICA TOP
3/4 LIPPED P.W. DOORS
WEST ELEVATION - UTILITY ROOM
SCALE 3/8" = 1'-0"
METAL LINER
OAK PLYWOOD
SECTION THRU PLANTER
END ELEVATION
1 3/8" x 2 1/2"
PAINT
OPEN
FORMICA
3/4" x 2 1/2"
CUT OUT OF 1" IS PLY FIN 3-EACH PLYWOOD
ZEPHYR
RECESSED BASE
LIVING ROOM ELEVATION
REMOVABLE SHELF
SECTION THRU SCREEN & CABINET
PAN-LAM PLASTIC
BOX-IN PIPE COLUMN
1 1/4" x 3/4" BACK SIDE OF PLASTIC
TYP. BASE
SCREEN BETWEEN DINING & FLA. RM'S
SCREEN BETWEEN LIVING RM & FLA. RM.
SCALE 3/8" = 1'-0"
RESIDENCE
FOR
MR. & MRS. GILBERT A. LABINE
NORTH LAKESIDE DRIVE
LAKE WORTH - FLORIDA
DRAWN BY D. & L.
Hilliard T. Smith Jr.
ARCHITECT
MEMBER OF THE AMERICAN INSTITUTE OF ARCHITECTS
JOB NO. B-109
DATE APRIL - 1958
SHEET NO. 6 OF 6

Lake Worth, Florida. The Art of Florida Living.sm

City Of Lake Worth
Department for Community Sustainability
Planning, Zoning and Historic Preservation Division
1900 Second Avenue North · Lake Worth · Florida 33461· Phone: 561-586-1687

MEMORANDUM DATE: May 4, 2016

AGENDA DATE: May 11, 2016

TO: Chair and Members of the Historic Resources Preservation Board

RE: **208 South Lakeside Drive**

FROM: Aimee N. Sunny, Senior Preservation Coordinator
Department for Community Sustainability

TITLE: HRPB Project Number 16-00100078: Consideration of a Certificate of Appropriateness (COA) for exterior alterations for all 12 units in the the multi-family structure located at **208 South Lakeside Drive**; PCN#'s: 38-43-44-27-18-000-5130, 38-43-44-27-18-000-4030, 38-43-44-27-18-000-4020, 38-43-44-27-18-000-4010, 38-43-44-27-18-000-3030, 38-43-44-27-18-000-3020, 38-43-44-27-18-000-3010, 38-43-44-27-18-000-2030, 38-43-44-27-18-000-2020, 38-43-44-27-18-000-2010, 38-43-44-27-18-000-1030, 38-43-44-27-18-000-1020, 38-43-44-27-18-000-1010, and 38-43-44-27-01-059-0010. The subject property was constructed in 1971 and is a non-contributing resource within the South Palm Park Local Historic District.

OWNER/APPLICANT: Park Towers, Inc. (HOA)
208 South Lakeside Drive
Lake Worth, FL 33460

BACKGROUND:

The 12 unit multi-family condominium structure at 208 South Lakeside Drive was designed in 1971 by architect Donald J. Della Valle and engineer Karl H. Haller for owner Richard J. Clausen. The property has public frontage on South Lakeside Drive to the west and Bryant Park to the east. The building was constructed in a Mid-Century Modern architectural style, and still retains most of its character defining features. These character defining features include the decorative masonry unit screen wall, vertical decorative banding, deep cantilevered carport, and concrete masonry construction with a stucco finish. Although the structure is non-contributing and is not yet 50 years of age, it is an excellent example of Mid-Century Modern condominium design with many unique and distinctive features. Although constructed in 1971, the structure has many design features that were utilized heavily in the 1950's and 1960's.

The original architectural plans for the building are available in the City's property files. Based on the information in the property file, few exterior alterations have occurred over time. Some original silver aluminum awning windows have been replaced with white aluminum impact single-hung windows, and some original silver sliding glass doors have been replaced with white aluminum impact sliding glass doors. Additionally, many units have removed their original clamshell shutters and other have installed roll-down or accordion style shutters. Overall, the building retains a high degree of historic integrity of location, setting, materials, and design.

REQUEST:

The Homeowners Assocation (HOA), on behalf of all condominium owners, has submitted plans for exterior alterations as follows:

1) Replace all of the remaining original 2-light and 3-light aluminum awning windows with PGT impact white aluminum 1/1 single hung windows. The windows are proposed to be replaced in the existing openings, however the divided light configuration and appearance of the windows is proposed to change.
2) Replace all remaining silver aluminum sliding glass doors with white aluminum impact sliding glass doors. The doors are proposed to be replaced in their existing openings, and will replicate the same configuration.
3) Remove all remaining original clamshell shutters, and all remaining non-original roll down and accordion style shutters.
4) Replace all original flush panel doors with decorative trim that enter each unit with new 2-panel impact steel doors.
5) Replace the existing plexiglass sidelights and transoms and the main entry doors with new tempered glass.

COMPREHENSIVE PLAN CONSISTENCY:

It is the analysis of Staff that the project, as proposed, is not consistent with the Comprehensive Plan goals and objectives concerning historic preservation and housing due to the fact that the Applicant is proposing a change that will have an adverse effect on the historic integrity of the property. Specifically, the request is in conflict with these objectives:

Goal 1.4 Encourage preservation and rehabilitation of historic and natural resources and where appropriate restrict development that would damage or destroy these resources. (Objective 1.4.2)

Objective 3.2.5: To encourage the identification of historically significant housing, and to promote its preservation and rehabilitation as referenced by the Surveys of Historic Properties conducted for the City of Lake Worth.

Policy 3.2.5.1: Properties of special value for historic, architectural, cultural or aesthetic reasons will be restored and preserved through the enforcement of the City's Historic Preservation Ordinance to the extent feasible.

ANALYSIS:

Zoning

The proposed alterations are not in conflict with the development requirements in the City's Zoning Code.

Historic Preservation

Staff has reviewed the documentation and materials provided in this application and outlined the applicable guidelines and standards found in the City's Historic Preservation Ordinance, detailed in Attachment 1 – Decision Criteria. The Applicant has also provided a response to these criteria, detailed in Attachment 3.

The National Park Service and Secretary of the Interior's Standards have very specific criteria regarding replacement of historic materials. Specifically Standards 2, 5, and 6 apply in this situation:

Standard 2 - The historic character of a property will be retained and preserved. The removal of distinctive materials or alteration of features, spaces, and spatial relationships that characterize a property will be avoided.

Standard 5 - Distinctive materials, features, finishes, and construction techniques or examples of craftsmanship that characterize a property will be preserved.

Standard 6 - Deteriorated historic features will be repaired rather than replaced. Where the severity of deterioration requires replacement of a distinctive feature, the new feature will match the old in design, color, texture, and, where possible, materials. Replacement of missing features will be substantiated by documentary and physical evidence.

It is the analysis of Staff that portions of the project as proposed are not compatible with the review criteria set forth in the City's Land Development Regulations, Historic Preservation Ordinance, Section 23.5-4.

The type, finish, and configuration of the proposed windows is not consistent with the original windows for this structure and the requirements of Standard #6. Based on the qualifications in Standard #6, if replacement windows are considered, they should be silver aluminum casement style windows with exterior raised applied triangular muntins to replicate the design, color, and configuration of the original aluminum awning windows. Similarly, if replacement products are considered for the sliding glass doors and single-light windows, they should have a silver aluminum finish and replicate the design, color, and configuration of the original doors and windows.

Over time, window replacement has occurred in (5) of the (12) individual units. A complete list, as well as a copy of a previously approved administrative COA letter, has been provided in the Applicant's justification statement, included as Attachment 3. The window and sliding glass door replacements that have already occurred are in accordance with the current request from the Applicant. The HOA association is requesting that all openings be replaced in the same manner, in order to provide a consistent exterior appearance for the entire structure.

The proposed replacement material for the existing flush panel doors with decorative applied trim is also not consistent with the Standards. Although the proposed doors do reference the 2-panel appearance of the doors, the detailing and specific design is not consistent with Mid-Century Modern design. The original flush doors with applied trim are a character defining feature of the Mid-Century style, and part of the original design of the structure as indicated in the original architectural drawings. If replaced, the new doors should be impact flush doors with trim applied to replicate the size, shape, profile, and pattern of the existing doors.

The proposed replacement of the plexiglass is in compliance with the Standards, as plexiglass is a replacement product and the original material would have been glass.

Public Comment
At the time of publication of this report, Staff has not received any public comment regarding this project.

CONSEQUENT ACTION:
Approve the application; approve the application with conditions; continue the hearing to a date certain to request additional information; or deny the application.

RECOMMENDATION:
Staff recommends that the Board discuss the application submitted, given that the proposal does not meet the requirements of the Secretary of the Interior's Standards for Historic Preservation or the City of Lake Worth Land

Development Regulations §23.5-4(k), but the proposal is in accordance with previously approved replacement windows and doors.

If the Board chooses to approve exterior alterations for the building, Staff recommends the following conditions:

1) All windows and doors shall be replaced in their existing openings, and shall replicate the size and configuration of the existing windows and doors.
2) All 2-light and 3-light awning style windows shall be replaced with silver aluminum impact casement style windows, with exterior raised applied triangular muntins to replicate the divided light pattern of the awning style windows.
3) All existing single-light operable windows shall be replaced with silver impact operable or fixed single-light windows.
4) All window and door replacements shall have a clear anodized or silver mill finish in order to most closely replicate the original materials.
5) All clamshell, roll-down, and accordion style shutters may be removed from the structure.
6) The original flush panel doors with decorative trim shall be replaced with new flush panel doors with decorative trim to replicate the existing doors.
7) The existing non-original plexiglass sidelights and transoms may be replaced with tempered glass.
8) All work shall be subject to Staff review at permitting and inspection during construction.

If the Board chooses to approve the windows and doors as requested by the Applicant, Staff recommends the following conditions:

1) Replacement windows may be 1/1 white aluminum single-hung windows where indicated on the drawings.
2) Replacement windows may be single light operable or fixed windows where indicated on the drawings.
3) Replacement sliding glass doors may be white aluminum impact sliding glass doors where indicated on the drawings.

POTENTIAL MOTION:

I MOVE TO **APPROVE** HRPB 16-00100078: Consideration of a Certificate of Appropriateness (COA) for exterior alterations for the subject building located at **208 South Lakeside Drive**, with conditions as recommended by Staff, based upon the preponderance of competent substantial evidence.

I MOVE TO **DENY** HRPB 16-00100078: Consideration of a Certificate of Appropriateness (COA) for exterior alterations for the subject building located at **208 South Lakeside Drive** because the Applicant has not established by a preponderance of the evidence that the application is in compliance with the City of Lake Worth Land Development Regulations Section 23.5-4, the Secretary of the interiors Standards for the Rehabilitation of Historic Properties, and the City's Comprehensive Plan.

ATTACHMENTS:

1. Decision Criteria
2. Application Photographs
3. Justification Statement
4. Proposed Window Information
5. Original Architectural Drawings

LOCATION MAP

MEMORANDUM

DATE: May 4, 2016

TO: Chair and Members of the Historic Resources Preservation Board

FROM: Aimee N. Sunny, Preservation Planning Coordinator
Department of Community Sustainability

SUBJECT: **HRPB Project Number 16-00100078:** Consideration of a Certificate of Appropriateness (COA) for exterior alterations for all 12 units in the the multi-family structure located at **208 South Lakeside Drive**; PCN#'s: 38-43-44-27-18-000-5130, 38-43-44-27-18-000-4030, 38-43-44-27-18-000-4020, 38-43-44-27-18-000-4010, 38-43-44-27-18-000-3030, 38-43-44-27-18-000-3020, 38-43-44-27-18-000-3010, 38-43-44-27-18-000-2030, 38-43-44-27-18-000-2020, 38-43-44-27-18-000-2010, 38-43-44-27-18-000-1030, 38-43-44-27-18-000-1020, 38-43-44-27-18-000-1010, and 38-43-44-27-01-059-0010. The subject property was constructed in 1971 and is a non-contributing resource within the South Palm Park Local Historic District.

HRPB Meeting Date: May 11, 2016

Per Section 23.5-4k(1) of the historic preservation ordinance, the Board shall use the following criteria in making a determination:

A. What is the effect of the proposed work on the landmark or the property upon which such work is to be done?
Response: It is the analysis of Staff that the work proposed would have an adverse effect on the historic appearance of the building, and is not compatible with the design or style of the Mid-Century Modern structure.

B. What is the relationship between such work and other structures on the landmark site or other property in the historic district?
Response: The proposed work will have no direct physical effect on any surrounding properties within the surrounding South Palm Park Local Historic District, however it will have an indirect visual effect on the district.

C. To what extent will the historic, architectural, or archaeological significance, architectural style, design, arrangement, texture, materials and color of the landmark or the property be affected?
Response: The Applicant is proposing work that is not compatible with the architectural design and detailing of the building by removing the historic aluminum awning windows and replacing them with white aluminum single-hung windows.

D. Would denial of a certificate of appropriateness deprive the property owner of reasonable beneficial use of his property?
Response: No, the denial of this COA as submitted does not prevent the Applicant from potentially proposing other alterations to the structure, nor would it make the building uninhabitable.

E. Are the applicant's plans technically feasible and capable of being carried out within a reasonable time?

Response: Yes.

F. Do the plans satisfy the applicable portions of the general criteria contained in the United States Secretary of the Interior's Standards for Rehabilitation then in effect or as they may be revised from time to time? The current version of the Secretary's Guidelines provides as follows:

(1) A property shall be used for its historic purpose or be placed in a new use that requires minimal change to the defining characteristics of the building and its site and environment.
Response: No change to the use of the property is proposed.

(2) This historic character of the property shall be retained and preserved. The removal of historic materials or alteration of features and spaces that characterize a property shall be avoided.
Response: The Applicant is proposing to remove original windows and doors that are character defining features of this property.

(3) Each property shall be recognized as a physical record of its time, place and use. Changes that create a false sense of historical development, such as adding conjectural features or architectural elements from other buildings, shall not be undertaken.
Response: Not applicable to this project.

(4) Most properties change over time; those changes that have acquired historic significance in their own right shall be retained and preserved.
Response: Not applicable to this project.

(5) Distinctive features, finishes and construction techniques or examples of craftsmanship that characterize a historic property shall be preserved.
Response: The original windows are an example of craftsmanship that characterizes not only this structure, but also the time period and architectural style in general.

(6) Deteriorated architectural features shall be repaired rather than replaced, wherever possible. In the event replacement is necessary, the new material should match the material being replaced in composition, design, color, texture, and other visual qualities.
Response: The proposed window replacement does not match the existing in style, composition, design, or color. Specifically replacing 3-light silver awning windows with 1/1 white single-hung windows changes the design, composition, and color of the original windows. The proposed replacement for the flush panel decorative doors also does not comply with this Standard, as the new door does not replicate the composition, texture, and visual quality of the Mid-Century door.

Repair or replacement of missing architectural features should be based on accurate duplications of features, substantiated by historical, physical, or pictorial evidence rather than on conjectural designs or because the different architectural elements from other buildings or structures happen to be available for relocation.
Response: Not applicable to this project.

(7) Chemical or physical treatments, such as sandblasting, that cause damage to historic materials, shall not be used. The surface cleaning of structures, if appropriate, shall be undertaken using the gentlest means possible.
Response: Not applicable to this project.

(8) Significant archeological resources affected by a project shall be protected and preserved. If such resources must be disturbed, mitigation measures shall be undertaken.
Response: Not applicable to this project.

(9) New additions, exterior alterations or related new construction shall not destroy historic materials that characterize the property. The new construction shall be differentiated from the old and shall be compatible with the massing, size, scale and architectural features to protect the historic integrity of the property and its environment.
Response: The proposed alterations remove historic windows that characterize the property.

(10) New additions and adjacent or related new construction shall be undertaken in such manner that, if removed in the future, the essential form and integrity of the historic building and its environment would be unimpaired.
Response: Not applicable to this project.

G. What are the effects of the requested change on those elements or features of the structure which served as the basis for its designation and will the requested changes cause the least possible adverse effect on those elements or features?
Response: It is the opinion of Staff that the historic character of the property would be adversely affected by the proposed project as submitted by the Applicant, as outlined above. The requested exterior alterations do not represent the least possible adverse effect on the property. There are alternate options, including replacement with impact casement windows in a clear anodized finish, with exterior raised applied muntins to replicate the existing divided light pattern.

Section 23.5-4k(2). Additional guidelines for alterations.

In approving or denying applications for certificates of appropriateness for alterations, the HRPB shall also consider the following additional guidelines:

A. Is every reasonable effort being made to provide a compatible use for a property that requires minimal alteration of the building, structure or site and its environment, or to use the property for its originally intended purpose?
Response: No change to the use of the property is proposed.

B. Are the distinguishing original qualities or character of a building, structure or site and its environment being destroyed? The removal or alteration of any historic material or distinctive architectural features shall be avoided whenever possible.
Response: The windows can be considered a distinctive architectural feature and should not be removed unless the level of deterioration is such that the windows cannot be repaired. In that case, the replacement windows should replicate the original windows as closely as possible.

C. When a certificate of appropriateness is requested to replace windows or doors, the HRPB shall permit the property owner's original design when the HRPB's alternative design would result in an increase in cost of thirty (30) percent above the owner's original cost. The owner shall be required to demonstrate to the HRPB that:
(1) The work to be performed will conform to the original window openings of the structure; and
Response: The applicant meets this criterion.
(2) That the replacement windows or doors with less expensive materials will achieve a savings in excess of thirty (30) percent over historically compatible materials otherwise required by this code.
Response: Staff must defer to the applicant.

PLANNING & PRESERVATION DIVISION
DEPARTMENT FOR COMMUNITY SUSTAINABILITY
CITY OF LAKE WORTH
1900 2ND AVENUE NORTH
LAKE WORTH, FL 33461
561.586.1687

CERTIFICATE OF APPROPRIATENESS APPLICATION

This application is required for **ALL** applications submitted to the Planning, Zoning and Historical Preservation Division. Planning staff can answer any questions you have regarding the applications and the processes during Planner On-Call hours (Monday – Friday, 9:00 – 10:30 a.m. and 3:00 – 4:00 p.m.). Please make an appointment with planning staff if you require more than 15 minutes with a staff member. **NOTE: PRE-APPLICATION MEETING REQUIRED FOR ALL CASES TO BE REVIEWED BY THE HISTORIC RESOURCES PRESERVATION BOARD.**

Application Type (select all that apply):

☒ Exterior Alterations (roof, windows, doors, etc) ☐ Fence/Wall/Gate ☐ Sign

☐ Addition ☐ New Construction ☐ Demolition ☐ Relocation

☒ Other: See attached narrative for detailed description of request

PROJECT INFORMATION

Project Location: 208 South Lakeside Drive, Lake Worth, Florida 33460

Legal Description: See attached narrative for legal description

PCN: 38-43-44-27-18-000-All Units Historic District: South Palm Park Contributing?: No

# of buildings/structures on property: 1 What type?: Five story multi-family building built in 1973

Current Use: Residential Condominium Change of Use Proposed?: Same

Total Estimated Cost of the Project: $56,000

Are you requesting consideration of Economic Hardship? No If yes, please include required checklist.

FOR OFFICE USE ONLY			
HRPB Project No.			
Associated Project Nos.			
Submittal Date		Sufficiency Date	
Project Planner Assigned			
Total Fee Amount	$ _____ ☐ PAID _____ ☐ DUE _____		

APPLICANT INFORMATION

Project Manager/Contact Person: Wes Blackman, AICP

Company: CWB Associates

Address: 241 Columbia Drive Lake Worth FL 33460
(Street Address) (City) (State) (Zip)

Phone No.: 561 308 0364 E-Mail Address: wesblackman@gmail.com

Applicant Name (if different from Project Manager): Same

Company:

Address:
(Street Address) (City) (State) (Zip)

Phone No.: E-Mail Address:

Owner Name: Park Towers, Inc.

Address: 208 South Lakeside Drive Lake Worth FL 33460
(Street Address) (City) (State) (Zip)

Phone No.: E-Mail Address:

OWNER'S CONSENT (IF APPLICABLE)

Park Towers, Inc. ("Owner") *certifies that it is the owner of the property* located at 208 South Lakeside ("Subject Property") and expressly consents to the use of the Subject Property as described in this application and to all conditions that may be agreed to as a part of the approval of this application, which may be imposed by the decision making board.

Owner hereby authorizes Wes Blackman, as agent, to file this application and represent Owner at any and all meetings and hearings required for the approval of this application.

Owner's Signature: Date: 04 04 16
Name/Title of Signatory: Gary Allen

STATE OF Florida)
COUNTY OF Palm Beach)
The foregoing instrument was acknowledged before me this 4th day of April, 2016 by Gary Brian Allen who is personally known to me or who produced a FL Drivers License as identification. He/she did not take an oath.

(NOTARY SEAL)

James H. Dorvil
Notary Public
State of Florida
My Commission Expires 08/04/2018
Commission No. FF 147584

(Signature of Notary Public)

James H. Dorvil
(Name of Notary)

PROJECT INFORMATION

DESCRIPTION OF WORK:

Provide a **detailed** description of work to be done as a result of this application (attach additional sheets if necessary).

See attached "Description of Work" narrative.

PRIOR APPROVALS:

Indicate any prior planning, zoning, historic or building approvals that you are aware of for the property (attach additional sheets if necessary).

See attached "List of Prior Approvals"

REQUIRED ATTACHMENTS FOR ALL APPLICATIONS

☐ CERTIFICATE OF APPROPRIATENESS APPLICATION

- Fill in all applicable fields and do not forget to include all required signatures.

☐ APPLICATION CHECKLIST

- Include all additional items as specified on each project specific application checklist if applicable. **FENCES AND SIGNS** do not have additional application checklists. Additional information may be required by Staff depending on the scope of each project.

☐ JUSTIFICATION STATEMENT

- Must address all compatibility criteria set forth in Section 23.5-4 Historic Preservation as applicable. See page 7 of this application for details. See the back of each applicable "Application Checklist" for details on additional specific criteria.

☐ PHOTOGRAPHS

- A minimum of one photograph of all elevations effected by the proposed project, including detail shots of significant architectural features.
- Digital, 35 mm, or disposable cameras. No Polaroids or Google Earth images.

☐ FEES

- Application will not be processed or scheduled for a Board meeting until fee is paid in full.

AFFIDAVIT OF COMPLETENESS AND ACCURACY

INSTRUCTIONS: To be completed by the individual submitting the application (owner or authorized agent).

Project Location: 208 South Lakeside Drive Submittal Date: 04 04 16

STATEMENT OF COMPLETENESS AND ACCURACY:

I hereby certify all property owners have full knowledge the property they own is the subject of this application. I hereby certify that all owners and petitioners have been provided a complete copy of all material, attachments and documents submitted to the City of Lake Worth relating to this application. I further certify the statements or information made in any paper or plans submitted herewith are true and correct to the best of my knowledge. I understand this application, related application material and all attachments become official records of the Planning, Zoning and Historic Preservation Division of Lake Worth, Florida, and will not be returned. I understand that any knowingly false, inaccurate or incomplete information provided by me will result in the denial, revocation or administrative withdrawal of this application, request, approval or permit. I further acknowledge that additional information may be required by Palm Beach County to process this application. I further acknowledge that any plans that I have prepared or had prepared comply with the Fair Housing Standards. I further consent to the City of Lake Worth to publish, copy or reproduce any copyrighted documents submitted as a part of this application for any third party. I further agree to all terms and conditions, which may be imposed as part of the approval of this application.

Check (✓) one: I am the ■ property owner ☐ authorized agent.

Gary Allen
(Name - type, stamp or print clearly)

(Signature)

Park Towers, Inc.
(Name of Firm)

208 South Lakeside Drive #513
(Address, City, State, Zip)

STATE OF Florida)
COUNTY OF Palm Beach)

The foregoing instrument was acknowledged before me this 4th day of April, 2016 by Gary Brian Allen who is personally known to me or who produced a FL Drivers License as identification. He/she did not take an oath.

(NOTARY SEAL)

James H. Dorvil
Notary Public
State of Florida
My Commission Expires 08/04/2018
Commission No. FF 147584

(Signature of Notary Public)

James H. Dorvil
(Name of Notary)

SIGN POSTING AGREEMENT

(REQUIRED FOR ALL APPLICATION TO BE REVIEWED BY HISTORIC RESOURCES PRESERVATION BOARD)

Applicant: Wes Blackman, AICP

Property Owner: Park Towers, Inc.

Contact Phone No.: 561 308 0364

Property Location: 208 South Lakeside Drive, Lake Worth, Florida 33460

I, Wes Blackman, hereby affirm that I will post the notification sign(s) provided to me for a minimum of ten (10) calendar days before the scheduled date of the hearing of Planning and Zoning Case No. _____.

Signature: [signature] Date: 4/4/16

Name/Title of Signatory: C. Wesley Blackman, Planner

STATE OF Florida)
COUNTY OF Palm Beach)

The foregoing instrument was acknowledged before me this 4 day of April, 2016, by Charles Wesley Blackman who is personally known to me or who produced a FL Driver's License as identification. He/she did not take an oath.

(NOTARY SEAL)

JUDITH ANN JUST
Notary Public - State of Florida
My Comm. Expires Feb 28, 2018
Commission # FF 068142

[signature]
(Signature of Notary Public)

Judith Ann Just
(Name of Notary)

2016 FLORIDA NOT FOR PROFIT CORPORATION ANNUAL REPORT

DOCUMENT# 725954

FILED
Feb 25, 2016
Secretary of State
CC4462686057

Entity Name: PARK TOWERS, INC.

Current Principal Place of Business:

208 SOUTH LAKESIDE DR
#513
LAKE WORTH, FL 33460

Current Mailing Address:

208 SOUTH LAKESIDE DR
#513
LAKE WORTH, FL 33460 US

FEI Number: 59-1513016

Certificate of Status Desired: No

Name and Address of Current Registered Agent:

ALLEN, GARY
208 SOUTH LAKESIDE DR,
#513
LAKE WORTH, FL 33460 US

The above named entity submits this statement for the purpose of changing its registered office or registered agent, or both, in the State of Florida.

SIGNATURE: GARY ALLEN 02/25/2016

Electronic Signature of Registered Agent — Date

Officer/Director Detail :

Title	TREASURER	Title	PRESIDENT
Name	ALLEN, ERIN	Name	GAARE, SANDRA
Address	208 SOUTH LAKESIDE DR. #513	Address	208 SOUTH LAKESIDE DR #303
City-State-Zip:	LAKE WORTH FL 33460	City-State-Zip:	LAKE WORTH FL 33460
Title	SECRETARY	Title	DIRECTOR
Name	ALLEN, GARY	Name	BERRY, GEORGE
Address	208 SOUTH LAKESIDE DR #513	Address	208 SOUTH LAKESIDE DR #202
City-State-Zip:	LAKE WORTH FL 33460	City-State-Zip:	LAKE WORTH FL 33460
Title	VP		
Name	RICHARD, MARK		
Address	208 SOUTH LAKESIDE DR. #401		
City-State-Zip:	LAKE WORTH FL 33460		

I hereby certify that the information indicated on this report or supplemental report is true and accurate and that my electronic signature shall have the same legal effect as if made under oath; that I am an officer or director of the corporation or the receiver or trustee empowered to execute this report as required by Chapter 617, Florida Statutes; and that my name appears above, or on an attachment with all other like empowered.

SIGNATURE: GARY ALLEN SECRETARY 02/25/2016

Electronic Signature of Signing Officer/Director Detail — Date

EXHIBIT 2-A

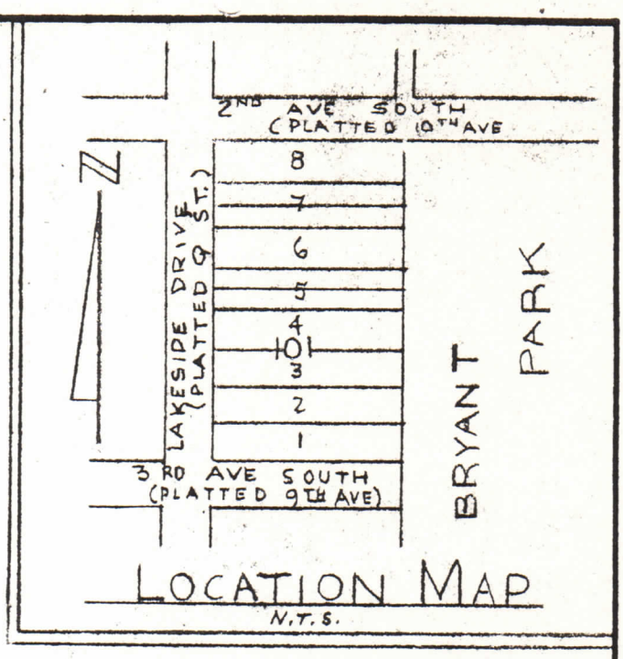

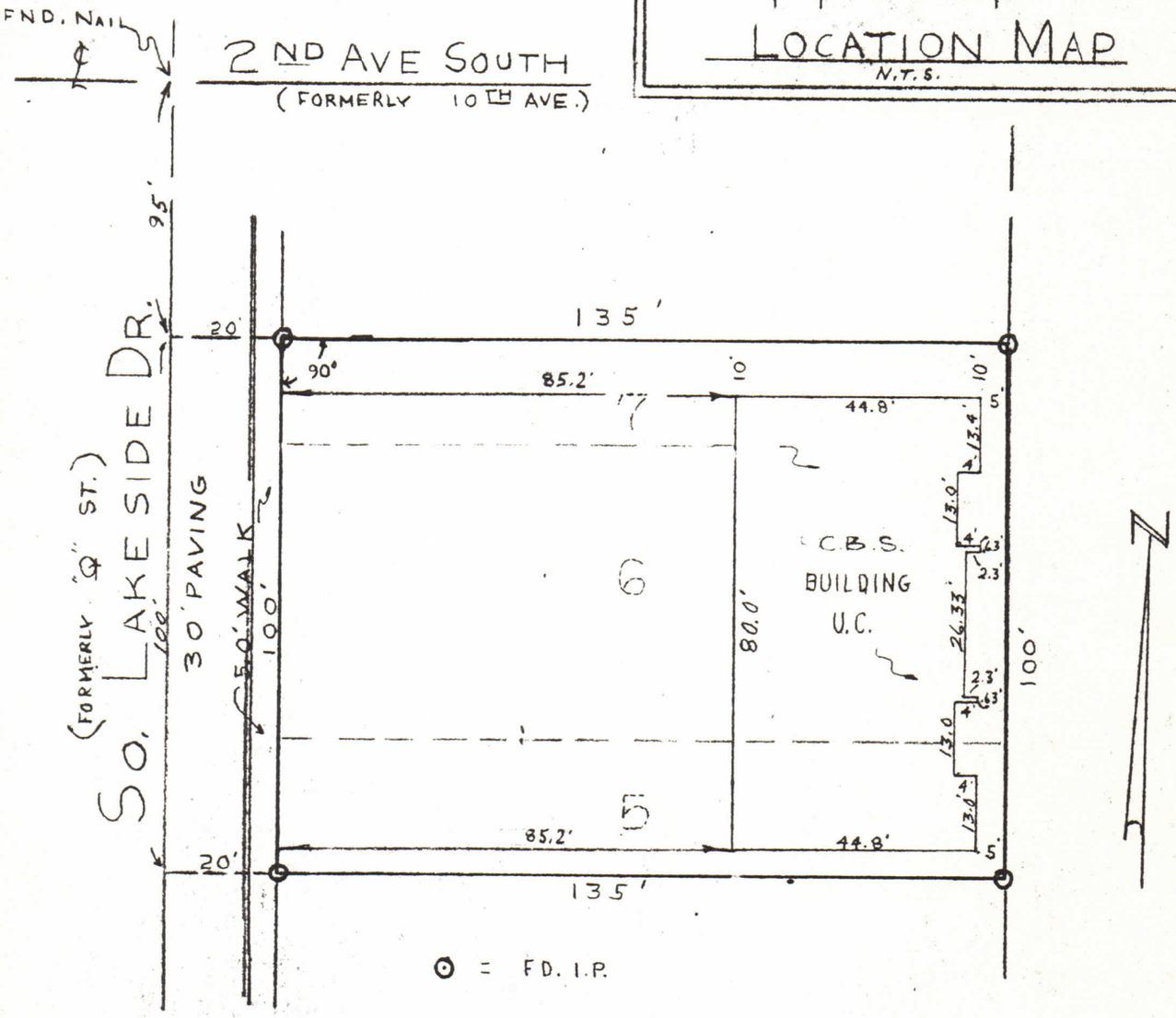

DESCRIPTION:

BEING THE N½ OF 5, S½ OF 7, ALL OF 6 BLOCK J.Q.I.
PLAT No 2, LUCERNE TOWNSITE
AS RECORDED IN PLAT BOOK 2 PAGE 76
IN THE RECORDS OF PALM BEACH COUNTY FLORIDA

I HEREBY CERTIFY THAT THE PLAT SHOWN HEREON IS A TRUE AND CORRECT REPRESENTATION OF A SURVEY OF THE PROPERTY DESCRIBED IN THE CAPTION THEREOF, MADE UNDER MY DIRECTION, AND IS ACCURATE TO THE BEST OF MY KNOWLEDGE AND BELIEF, AND THAT THERE ARE NO APPARENT ENCROACHMENTS.

REGISTERED LAND SURVEYOR, FLORIDA CERTIFICATE NO. 2360

ADD ON - U.C. TIE IN 9/23/71

PLAT OF SURVEY
FOR
RICHARD CLAUSEN

Adair & Brady, Inc.
ENGINEERS & LAND SURVEYORS
LAKE WORTH, FLORIDA

DR D.J.C.	DATE 9-23-71	W.O. 71/153
CK		LS 3396A
B.C-15 P.22	SCALE 1" = 30'	
DST 9-23-71		

Legal Description: North ½ of Lot 5, south ½ of Lot 7 and all of Lot 6, Block 101, Plat No. 2, Lucerne Townsite as recorded in Plat Book 2, Page 36 in the records of Palm Beach County, Florida.

Request/Description of Work:

This application is for a Certificate of Appropriateness (COA) for window and door replacement for a five story, multi-family structure. The building was built in 1973. It appears as a non-contributing resource in the South Palm Park Local Historic District designation report. According to the COA Approval Matrix currently available on the city's website, window and door replacement is to be reviewed by staff and not go to the Historic Resource Preservation Board (HRPB).

During the pre-application meeting outlining the renovation work about to be undertaken by the condominium association, it was determined that the application should be subject to board review. Staff determined that, even though built in 1973, the building might eventually be listed as a contributing structure if the district is re-surveyed in the future. It should be pointed out that 1973 is outside of the current period of significance of the district and that the building will be 50 years old in 2023. While not a hard and fast rule, 50 years of age is a guideline as to what would be a contributing structure and what would not be. As of today, the building is listed as a non-contributing resource.

Generally, the request would involve the replacement of existing awning windows with single hung white aluminum impact units. These would have the same look as the awning windows, maintaining the one horizontal muntin in the middle of the window unit. Likewise, the existing aluminum sliding doors would be replaced with white aluminum impact units of the same configuration. Small existing utility room and bathroom windows would be replaced by white aluminum impact units. Entry doors to each unit would also be replaced with a similar style impact door. Lastly, the sidelights and transoms of two storefront door openings that are currently aged and "foggy" plexiglass would be replaced with tempered glass units.

Please refer to the attached building elevation diagrams and pictures of existing conditions that are included with this application.

Justification Statement

This application would seek to follow the pattern of previous permitted window and sliding door replacements that have occurred in the past. This "blanket" approval would allow the condominium association to replace existing windows with impact windows for all units that have not done so already. As part of the project, rolldown shutter boxes and clamshell shutters would be removed from the building as they would no longer be needed. This would "clean

up" the look of the building and return it to more of its intended design. The building would then be repaired, prepped and painted immediately following the installation of the new windows, sliding doors, entry doors and plexiglass door sidelights.

List of Previous approvals:

Date	Description
6/9/02	Unit #303 Aluminum Rolldown Shutters
5/15/08	Unit #103 Window Replacement
5/15/08	Unit #303 Aluminum Rolldown Shutters
5/21/08	Unit #403 Window/Door Replacement
5/21/08	Unit #103 Window/Door Replacement
8/28/08	Unit #201 Window/Door Replacement
12/3/10	Entire Building Fire Alarm
4/12/12	Unit #302 Aluminum Rolldown Shutters
4/16/12	Unit #101 Aluminum Rolldown Shutters
3/1/13	Unit #203 Window/Door Replacement
8/23/13	Unit #401 Window/Door Replacement
10/9/13	Unit #401 COA (see Kelly Christianson Memo)

Criteria for Granting Certificates of Appropriateness (Section 23.5-4(k)1)

In approving or denying applications for certificates of appropriateness, the City shall, at a minimum, consider the following general guidelines:

A. What is the effect of the proposed work on the landmark or the property upon which such work is to be done?

Response: The structure is listed as a non-contributing building in the South Palm Park Local Historic District. The project would result in the removal of rolldown shutter boxes that are found above the window and sliding door openings of the building, providing for an

improved appearance. The replacement impact window units would be identical in appearance to those previously permitted and approved.

B. What is the relationship between such work and other structures on the landmark site or other property in the historic district?

Response: There are no other structures on the property. The building would have a cleaner, more consistent and uniform exterior appearance. This would benefit other properties within the historic district.

C. To what extent will the historic, architectural, or archaeological significance, architectural style, design, arrangement, texture, materials and color of the landmark or the property be affected?

Response: In some cases, existing windows with an anodized finish would be removed and awning-style windows would be replaced with previously permitted and approved single hung white aluminum impact units.

D. Would denial of a certificate of appropriateness deprive the property owner of reasonable beneficial use of his property?

Response: It would create a continued hardship for individual unit owners to be responsible for their own window and door replacement. It would also create uncertainty as to what impact window or door would be approved going forward. It may leave some units without hurricane protection. It also may prevent savings possible from lower wind insurance premiums.

E. Are the applicant's plans technically feasible and capable of being carried out within a reasonable time?

Response: Yes. The work is ready to begin upon board approval of the COA.

F. Do the plans satisfy the applicable portions of the general criteria contained in the United States Secretary of the Interior's Standards for Rehabilitation then in effect or as they may be revised from time to time?

The current version of the Secretary's Guidelines provides as follows:

(1) A property shall be used for its historic purpose or be placed in a new use that requires minimal change to the defining characteristics of the building and its site and environment.

Response: There is no change in the building's historic purpose or use that would result in a change to the defining characteristics of the building, site and environment.

(2) This historic character of the property shall be retained and preserved. The removal of historic materials or alteration of features and spaces that characterize a property shall be avoided.

Response: The building is considered a non-contributing resource. What character it has would be retained, with only a minimal change to some existing windows. Other windows have already been permitted and installed with the same style and material as the replacement windows and doors requested here.

(3) Each property shall be recognized as a physical record of its time, place and use. Changes that create a false sense of historical development, such as adding conjectural features or architectural elements from other buildings, shall not be undertaken.

Response: There are no conjectural features or architectural elements from other buildings being added. The building itself is not changing.

(4) Most properties change over time; those changes that have acquired historic significance in their own right shall be retained and preserved.

Response: Windows and doors have changed over time. They have been permitted and approved in a similar style as proposed. Added exterior shutters will be removed that detract from the historic integrity of the building.

(5) Distinctive features, finishes and construction techniques or examples of craftsmanship that characterize a historic property shall be preserved.

Response: There are a small number of anodized aluminum window units left on the building. Many have already been replaced by white aluminum impact units that have already been approved and permitted. Granting the COA would rid the building of rolldown shutter boxes and provide a uniform appearance.

(6) Deteriorated architectural features shall be repaired rather than replaced, wherever possible. In the event replacement is necessary, the new material should match the material being replaced in composition, design, color, texture, and other visual qualities. Repair or replacement of missing architectural features should be based on accurate duplications of features, substantiated by historical, physical, or pictorial evidence rather than on conjectural designs or because the different architectural elements from other buildings or structures happen to be available for relocation.

Response: There are a small number of anodized aluminum window units left on the building. Many have already been replaced by white aluminum impact units that have already been approved and permitted. Granting the COA would rid the building of rolldown shutter boxes and provide a uniform appearance.

(7) Chemical or physical treatments, such as sandblasting, that cause damage to historic materials, shall not be used. The surface cleaning of structures, if appropriate, shall be undertaken using the gentlest means least likely.

Response: Not applicable.

(8) Significant archeological resources affected by a project shall be protected and preserved. If such resources must be disturbed, mitigation measures shall be undertaken.

Response: Not applicable.

(9) New additions, exterior alterations or related new construction shall not destroy historic materials that characterize the property. The new construction shall be differentiated from the old and shall be compatible with the massing, size, scale and architectural features to protect the historic integrity of the property and its environment.

Response: There is no new construction associated with this request. Exterior alterations are limited to door and window replacement.

(10) New additions and adjacent or related new construction shall be undertaken in such manner that, if removed in the future, the essential form and integrity of the historic building and its environment would be unimpaired.

Response: Not applicable.

G. What are the effects of the requested change on those elements or features of the structure which served as the basis for its designation and will the requested changes cause the least possible adverse effect on those elements or features?

Response: This structure is a non-contributing resource within a local historic district. The changes proposed are consistent with changes to the building approved previously.

H. Such other supplemental guidelines for restoration and rehabilitation of historic properties which the HRPB may from time to time adopt.

Response: Not applicable.

Total Number of Openings:

East
12 - Sliding Glass Doors 96 x80
4 - Single Hung 44 x 50

West
4 - Single Hung 44 x 38
4 - Single Hung 37 x 26
4 - Casements 24 x 19
12 - Entry Doors

North
6 - Single Hung 44 x 38
6 - Casements 24 x 19

South
2 - Single Hung 44 x 38
2 - Casements 24 x 19

2 - Storefront Glass sidelights/transom

DEPARTMENT for COMMUNITY SUSTAINABILITY
PLANNING, ZONING, AND HISTORIC PRESERVATION

1900 2nd Ave North · Lake Worth, Florida 33461 · Phone: 561-586-1687

REVIEWED

13-2808

CLW PLANS EXAMINER

DATE: 10/9/2013

APPLICANT: T.J. Davis Windows
1848 Aragon Avenue
Lake Worth, FL 33460

PROJECT: **COA#13-00100217**: Certificate of Appropriateness (COA) for window and door replacement for the subject property located at 208 South Lakeside Drive #401; PCN#38-43-44-27-18-000-4010. The subject property is a non-contributing resource within the South Palm Park Local Historic District.

On October 7, 2013 the Division of Planning, Zoning, and Historic Preservation received a COA application for window and door replacement for the property located at 208 South Lakeside Drive #401. The property is a multi-unit condominium building, with the subject unit being on the northwest corner of the building visible from South Lakeside Drive. The application proposes to replace four (4) single hung windows with new aluminum impact single hung windows, one siding glass door with a new sliding glass door and replace the front door with a new fiberglass impact door, per the plans submitted. This COA application was submitted concurrently with building permit application #13-2808.

Staff approves the request as described in the COA application. The project as proposed is consistent with the requirements of the historic preservation ordinance and will have no adverse physical or visual effect on the property or the surrounding historic district. This letter only constitutes an approval of compliance with the review process for exterior changes to a property within a local historic district as defined in City of Lake Worth Municipal Code §23.5-4. This approval does not exempt the applicant from complying with the building code and zoning ordinance of the City of Lake Worth concerning window and door installation.

No changes shall be made to the information on this approved application that could in any way constitute a change in the aesthetic character of the project without approval of staff or the Historic Resources Preservation Board.

Please be advised the Certificate of Appropriateness authorized herein shall be null and void unless construction has commenced and is proceeding within one (1) year from the staff approval date.

Kelly M. Christensen, Preservation Planner
Division of Planning, Zoning, and Historic Preservation
Department for Community Sustainability

2nd Ave S
2nd Ave S
2nd Ave S
S Lakeside Dr
S Lakeside Dr

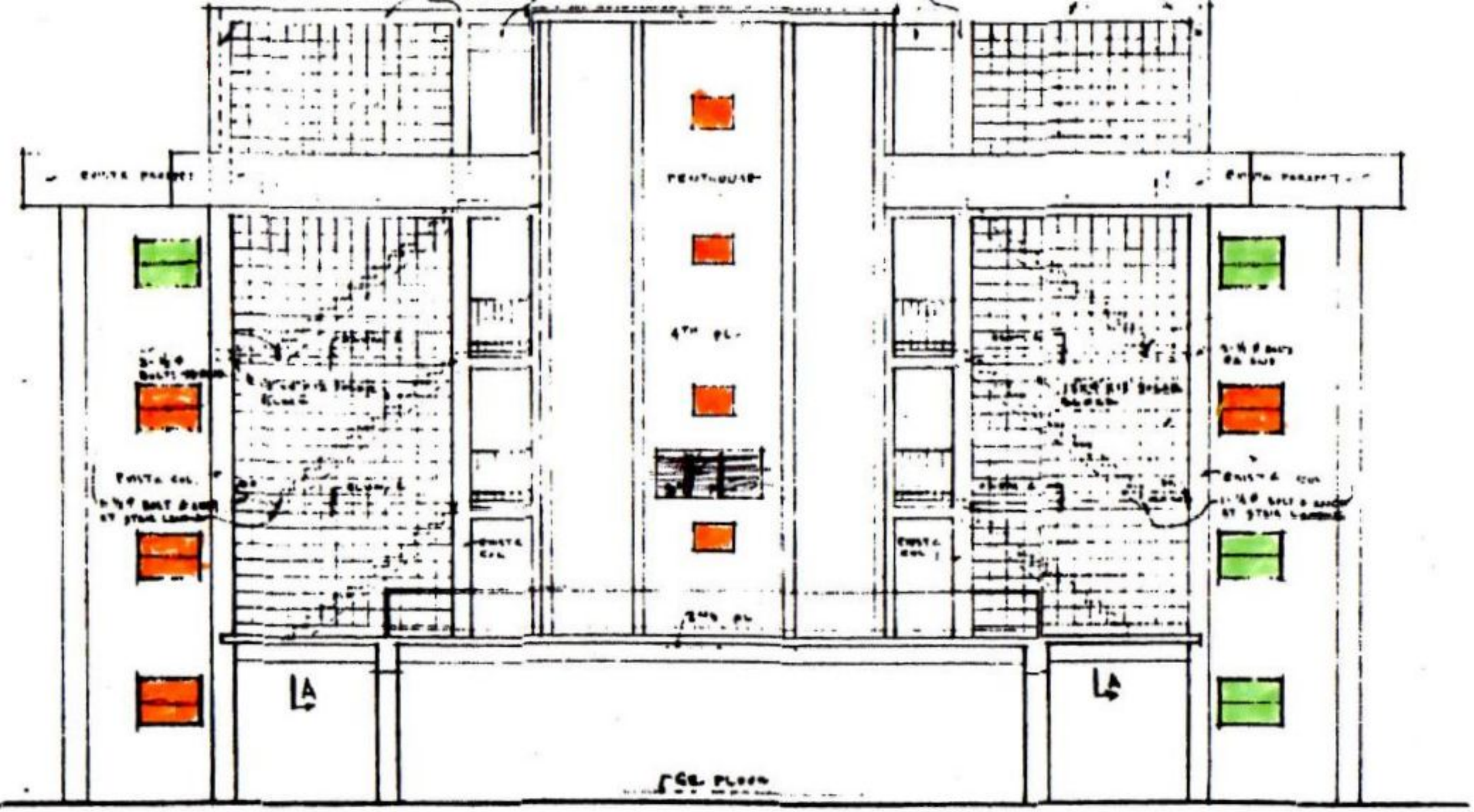

WEST ELEVATION

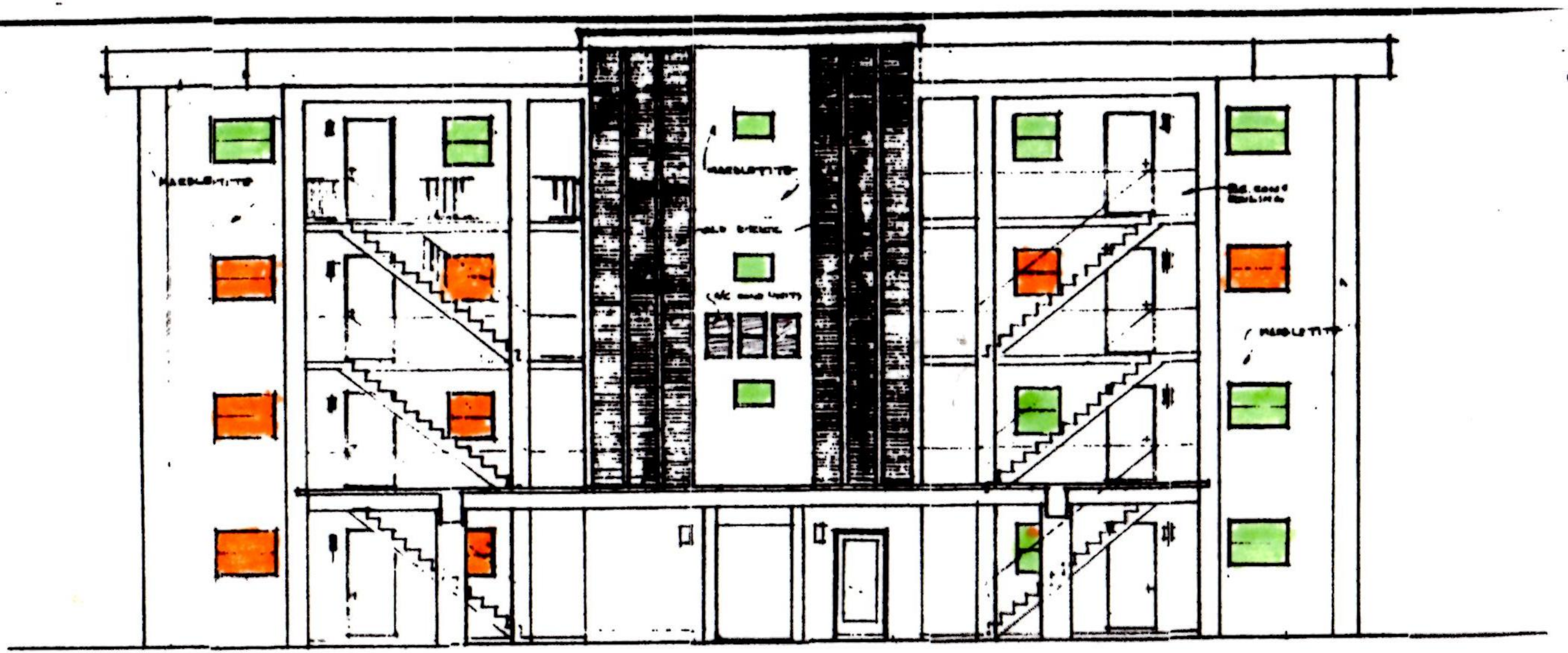

WEST ELEVATION

3/16" = 1'-0"

COLOR:- WHITE MARBLETITE
FINISH THRU OUT, WHITE RAILING.

NOTE:
P.C CONC RAILING SHALL BE PICKETT DESIGN
AS FURNISHED BY SOLDIR SCREEN.

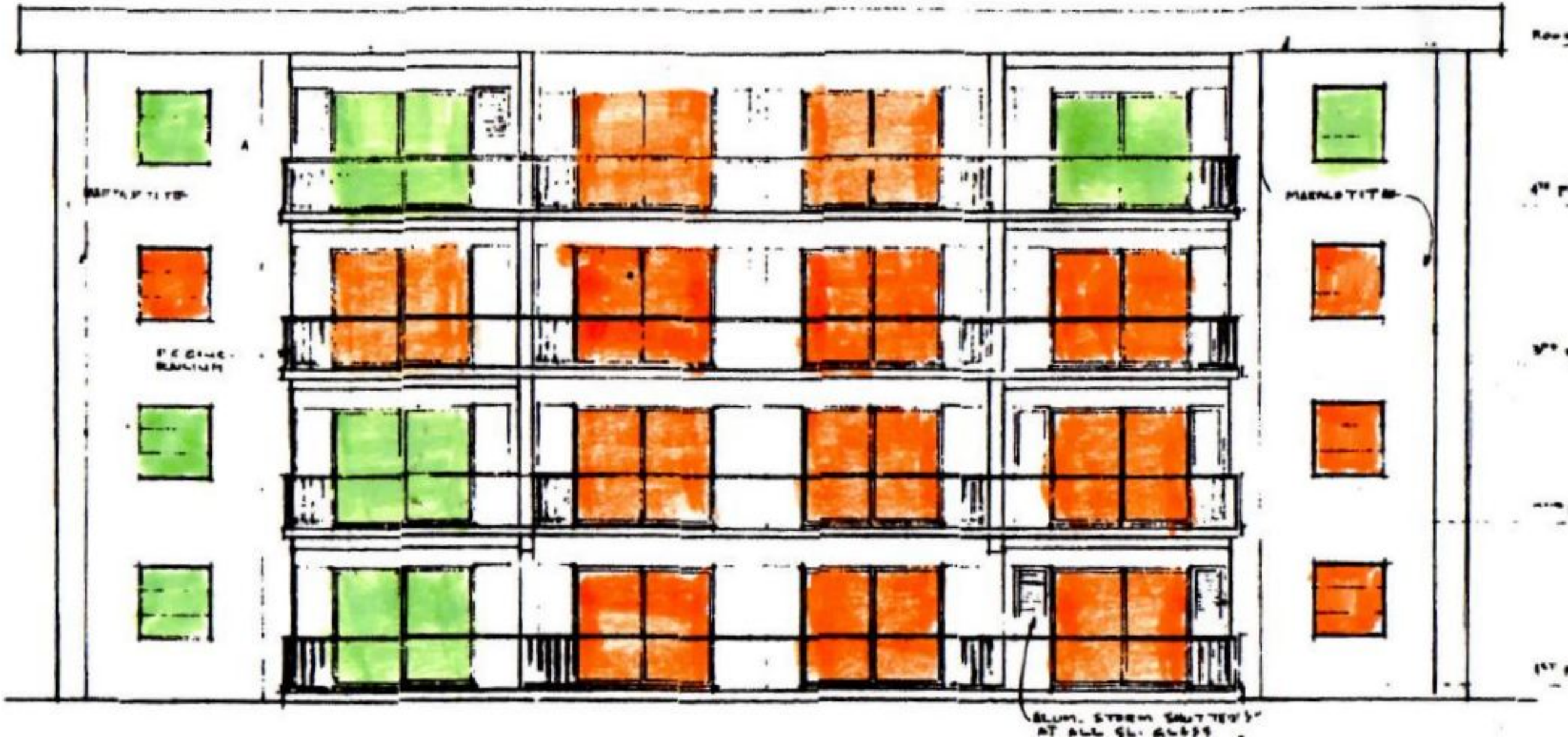
MARBLE TILE
MARBLE TILE
BLUM. STORM SHUTTERS
AT ALL SL. GLASS

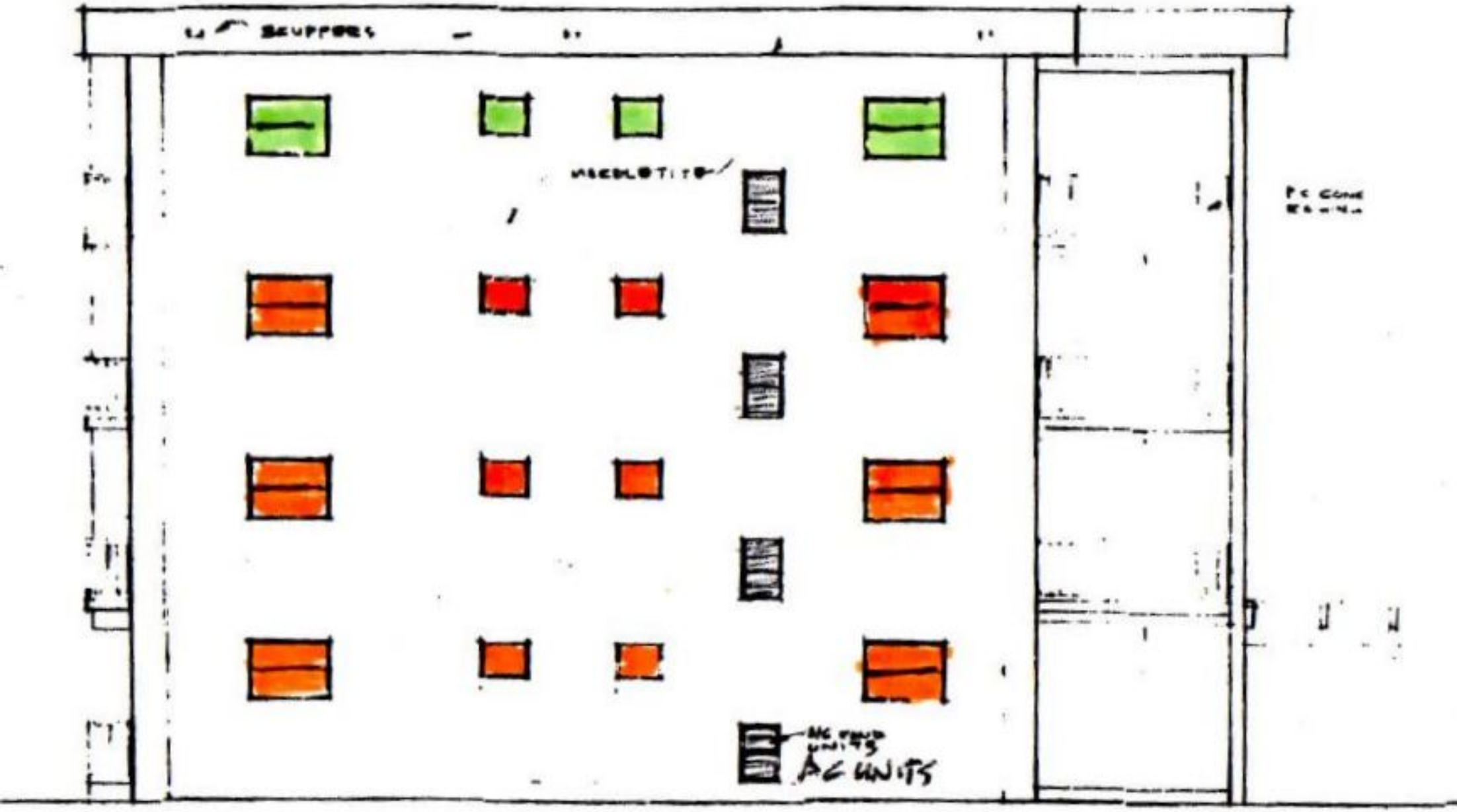

NORTH ELEVATION (SOUTH ELEVATION SIMILAR EXCEPT REVERSED)

3/16" = 1' 0"

~~NORTH~~ ELEVATION (SOUTH ELEVATION SIMILAR EXCEPT REVERSED)

SOUTH

Park Towers, 208 South Lakeside Drive, looking east.

Northwest quarter of Park Towers. Windows shown here with rolldown shutters to be removed. Decorative concrete block screen shown here to remain.

Southwest quarter, top, Park Towers, showing south, western detail of decorative concrete block screen (to remain). Rolldown shutter boxes to be removed over windows at right.

View of Park Towers, 208 South Lakeside Drive, from the west looking east and slightly north.

Park Towers, 208 South Lakeside, carport detail, western facade with decorative concrete block (to remain). Note open stairwell with railings (to remain).

Southwest corner of Park Towers. Windows on floors 1, 2, and 4 already replaced with white aluminum impact windows. Floor 3 unit to be replaced with similar product.

Typical unit door at Park Towers - all behind decorative concrete block facade, to be replaced as indicated.

Southwest corner storefront, plexilgass sidelights to be replaced with clear tempered glass.

Southwest corner storefront, plexilgass sidelights to be replaced with clear tempered glass.

View looking up at south building facade. Second floor typical of window used as permitted white aluminum replacement, including fixed smaller windows toward center.

View of southern building facade, first floor, windows shown are approved and permitted white aluminum replacement units. Clamshell shutters to be removed.

Smaller, aluminum, fixed windows in center showing approved white aluminum replacement windows.

Eastern buildilng facade, lower southeast corner unit showing approved white aluminum replacement single hung window with similar sliding glass door.

Second floor southeast corner unit showing approved replacement white aluminum impact windows. Note that rolldown shutter boxes in upper right to be removed.

Eastern facade, third floor awning window to be replaced with previously approve white aluminum single hung impact window. Rolldown shutter boxes to be removed.

Eastern building facade. Wall windows seen here to be replaced with single hung white aluminum impact windows. Only two awning windows left here as seen in this photo, 1st and 3rd floor.

Eastern building facade looking west from Bryant Park. Only three, three pane awning windows left. All rollldown shutter boxes to be removed.

Northern eastern corner of building. One third floor, three pane annodized in view at right.

Northern facade of building showing floors 2 and 3. All windows here, except the 4th floor, to be replaced with white aluminum single hung windows. Smaller windows same, but fixed. Shutter boxes to be removed.

Northern facade of building, showing anodized awning windows to be replaced with previously approved white aluminum single hung windows. Smaller windows to be fixed.

Smaller windows to be fixed white aluminum impact windows.

North facade showing floors 2, 3 and 4. Rolldown shutter boxes to be removed. 4th floor has approved white aluminum single hung replacement windows already.

Example of few remaining anodized awning windows. To be replaced with white aluminum single hung impact windows.

Example of single hung replacement window, with rolldown shutter box to be removed.

Northern stronfront door where plexiglass sidelights will be replaced with clear tempered glass.

Rolldown window shutter boxes to be removed.

WINDOW- LAYOUT

CUSTOMER NAME: Santa Khanna DATE:

ADDRESS: 208 S. Lakeside Drive #103

#s 1, 2, 5 44X39 S/H

3, 4, 24X19 casement

6 44X51 S/H

CITY OF LAKE WORTH
REVIEWED FOR CODE COMPLIANCE
DATE 5/15/18
REVIEWED BY:
ISSUANCE OF THIS PERMIT SHALL NOT CONSTITUTE PERMISSION TO VIOLATE BUILDING, ZONING OR LICENSING REQUIREMENTS.

CITY OF LAKE WORTH
REVIEWED FOR CODE COMPLIANCE
DATE
REVIEWED BY:
ISSUANCE OF THIS PERMIT SHALL NOT CONSTITUTE PERMISSION TO VIOLATE BUILDING, ZONING OR LICENSING REQUIREMENTS.

VISUAL INSPECTIONS REQUIRED

1. FOOTINGS FOUNDATION	6. ROOF & WALL SHEATING
2. SLAB	7. TIN-TAG
3. BEAMS/COLUMNS	8. LATH/WALLBOARD
4. FRAMING ✓	9. FINAL ✓
5. IN PROGRESS	10. INSULATION
6. PRE-INSPECTION 6/12	12. VAPOR BARRIER

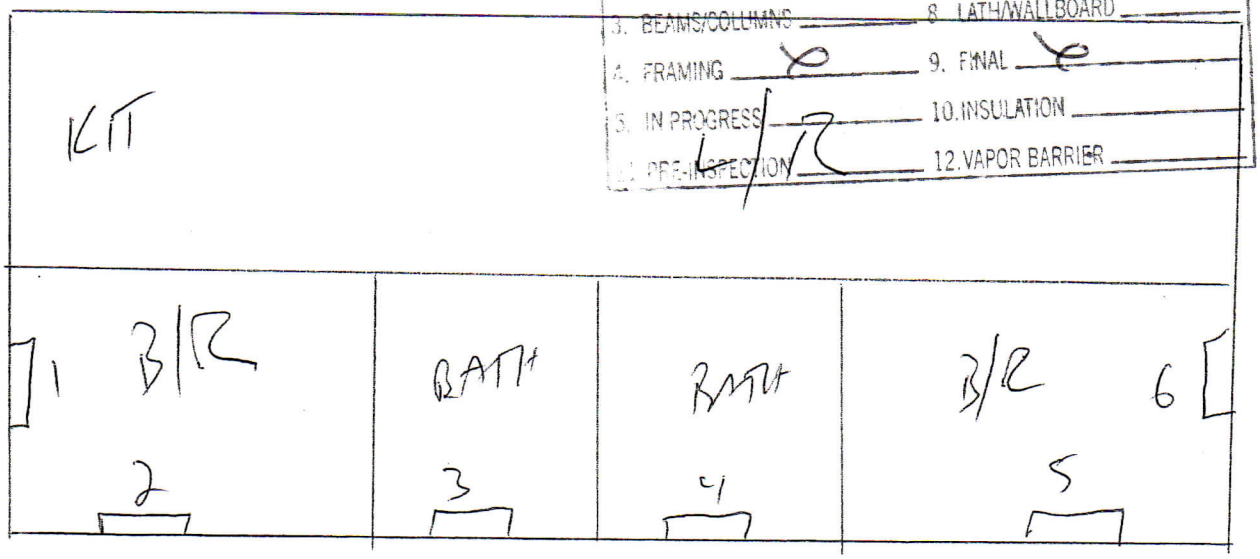

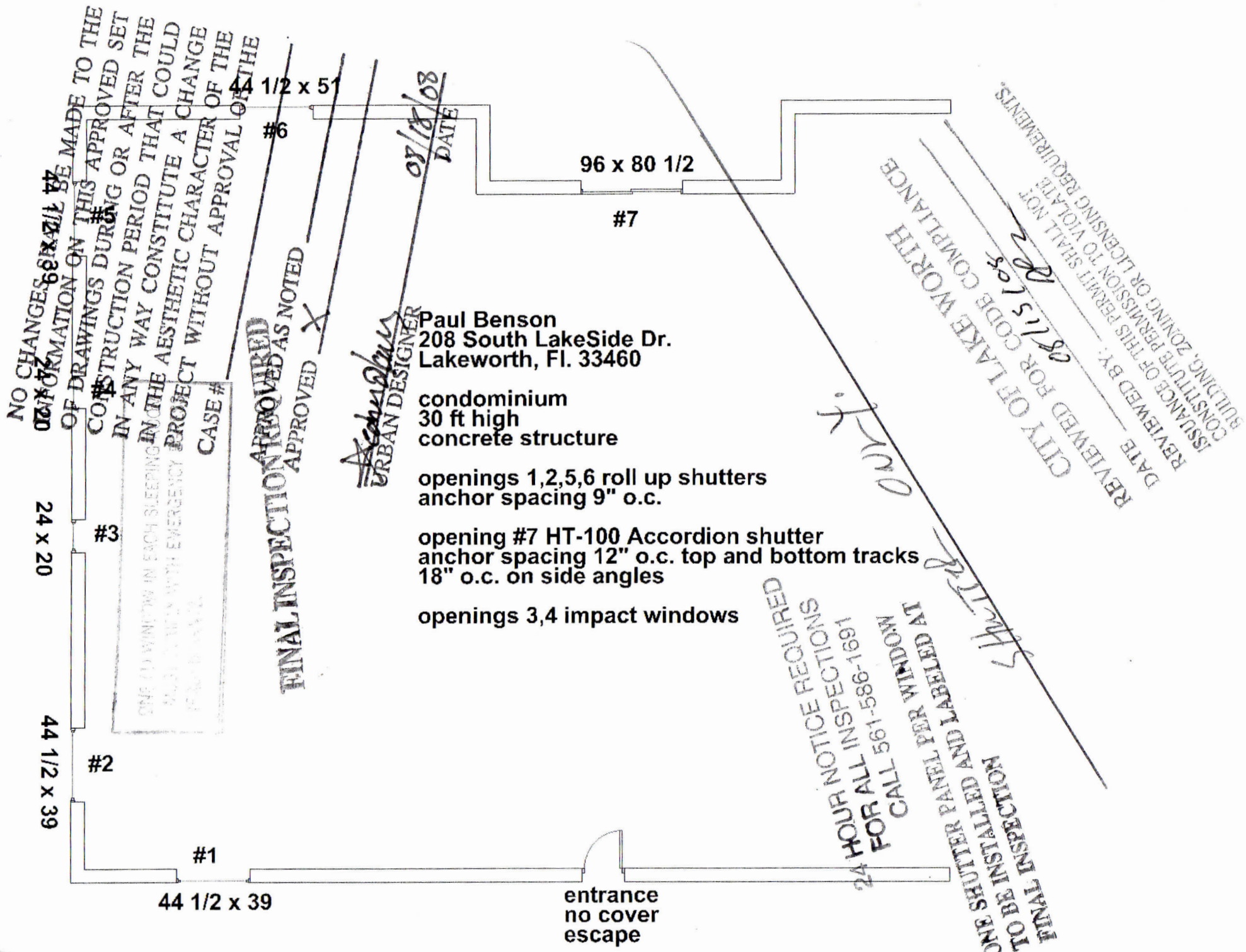
44 1/2 x 51
#6
96 x 80 1/2
#7
44 1/2 x 39
#5
24 x 20
#4
24 x 20
#3
44 1/2 x 39
#2
#1
44 1/2 x 39
entrance
no cover
escape
Paul Benson
208 South LakeSide Dr.
Lakeworth, Fl. 33460
condominium
30 ft high
concrete structure
openings 1,2,5,6 roll up shutters
anchor spacing 9" o.c.
opening #7 HT-100 Accordion shutter
anchor spacing 12" o.c. top and bottom tracks
18" o.c. on side angles
openings 3,4 impact windows
NO CHANGES MAY BE MADE TO THE INFORMATION ON THIS APPROVED SET OF DRAWINGS DURING OR AFTER THE CONSTRUCTION PERIOD THAT COULD IN ANY WAY CONSTITUTE A CHANGE IN THE AESTHETIC CHARACTER OF THE PROJECT WITHOUT APPROVAL OF THE CASE #
APPROVED
APPROVED AS NOTED
X
URBAN DESIGNER
08/18/08
DATE
FINAL INSPECTION REQUIRED
CITY OF LAKE WORTH
REVIEWED FOR CODE COMPLIANCE
DATE
08/15/08
REVIEWED BY:
ISSUANCE OF THIS PERMIT SHALL NOT CONSTITUTE A VIOLATION OF BUILDING, ZONING OR LICENSING REQUIREMENTS.
ONE SHUTTER PANEL PER WINDOW TO BE INSTALLED AND LABELED AT FINAL INSPECTION
24 HOUR NOTICE REQUIRED FOR ALL INSPECTIONS
CALL 561-586-1691

WINDOW- LAYOUT

CUSTOMER NAME: MOULIN DATE: 9/6/13

ADDRESS: 208 S LAKESIDE #401

1 - 30x80 FIBERGLASS Door
2 - 44x38 SH
3 - 44x38 SH
4 - 44x38 SH
5 - 44x50 SH
6 - 96x80 SGD

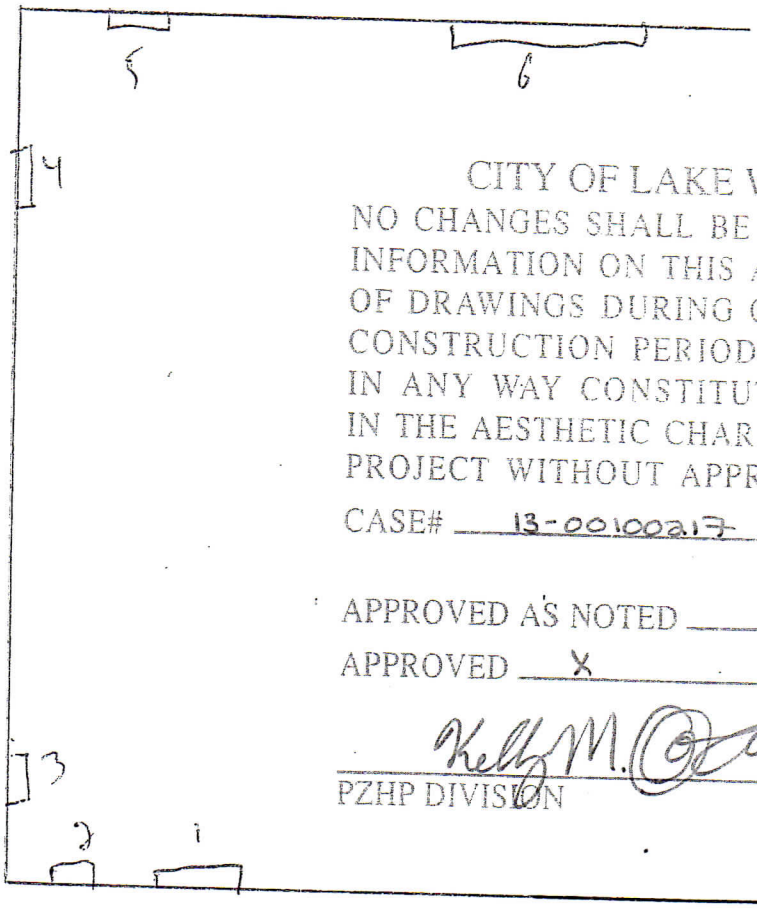

CITY OF LAKE WORTH
NO CHANGES SHALL BE MADE TO THE INFORMATION ON THIS APPROVED SET OF DRAWINGS DURING OR AFTER THE CONSTRUCTION PERIOD THAT COULD IN ANY WAY CONSTITUTE A CHANGE IN THE AESTHETIC CHARACTER OF THE PROJECT WITHOUT APPROVAL OF THE

CASE# 13-00100217

APPROVED AS NOTED _____

APPROVED X

Kelly M. [illegible] 10/9/13

PZHP DIVISION DATE

OFFICE COPY

SUBJECT TO COMPLIANCE WITH ALL CODES AND ORDINANCES IN EFFECT IN THE CITY OF LAKE WORTH

24 HOUR NOTICE REQUIRED FOR ALL INSPECTIONS: CALL 561-586-1691 ~~T064~~

SCHEDULE INSPECTIONS - 80

REVIEWED 44x50 5/8 SH

208 S Lakeside Dr
Apt 203
Lake Worth, Fl
multi famly dwelling
window + door retro fit
5 story building

NOA'S

SGD - 11-1018.14
SH - 11-1013.14
CSMT - 11-1110.17

VISUAL INSPECTIONS REQUIRED

1. FOOTINGS FOUNDATION	6. ROOF & WALL SHEATING
2. SLAB	7. TIN-TAG
3. BEAMS/COLUMNS	8. LATH/WALLBOARD
4. FRAMING	9. FINAL ✓
5. IN PROGRESS ✓	10. INSULATION
11. PRE-INSPECTION	12. VAPOR BARRIER

CITY OF LAKE WORTH
REVIEWED FOR CODE COMPLIANCE
DATE 02/27/13
REVIEWED BY:
ISSUANCE OF THIS PERMIT SHALL NOT CONSTITUTE PERMISSION TO VIOLATE BUILDING, ZONING OR LICENSING REQUIREMENTS.

CLW PLANS EXAMINER

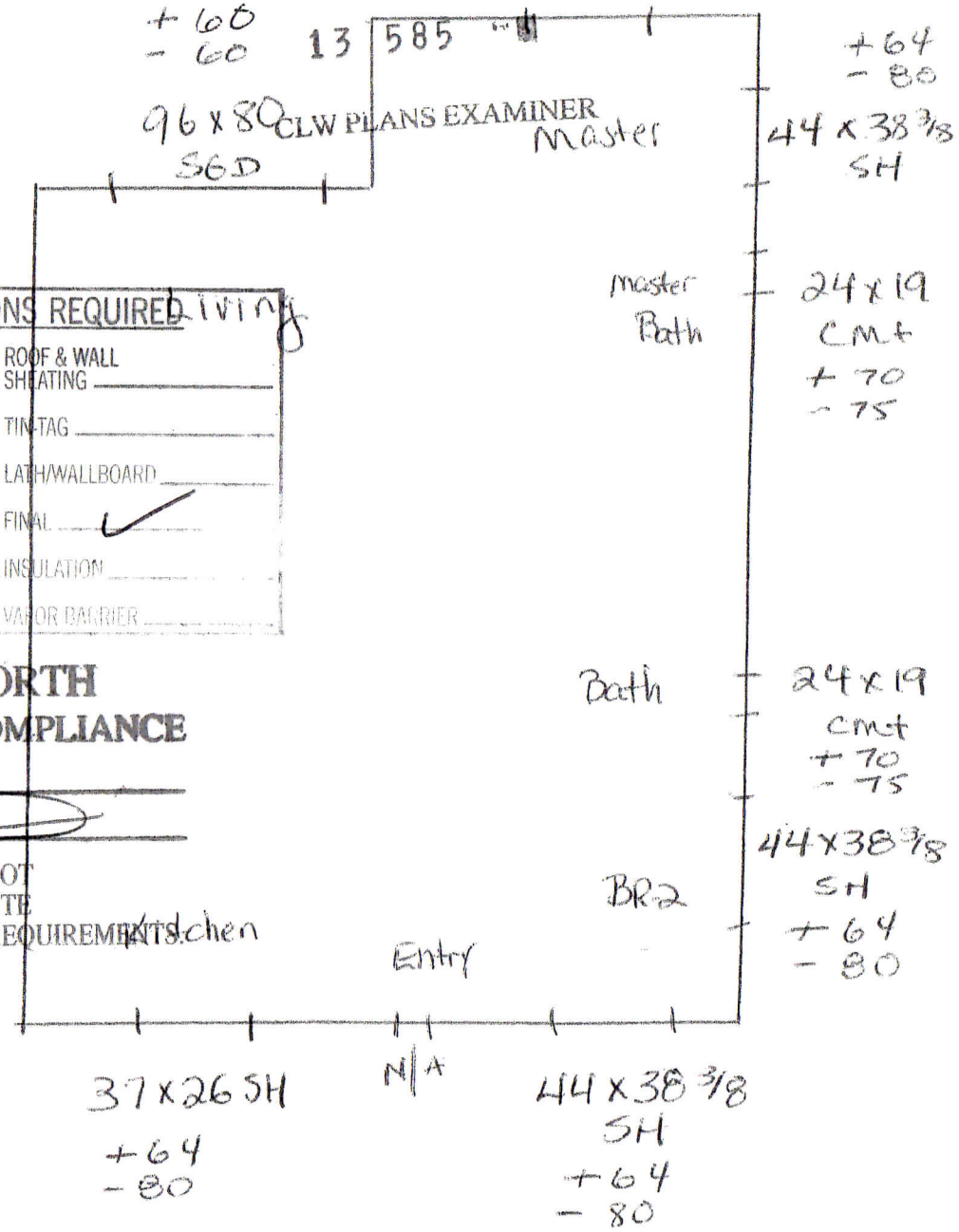

Bldg Footprint	203

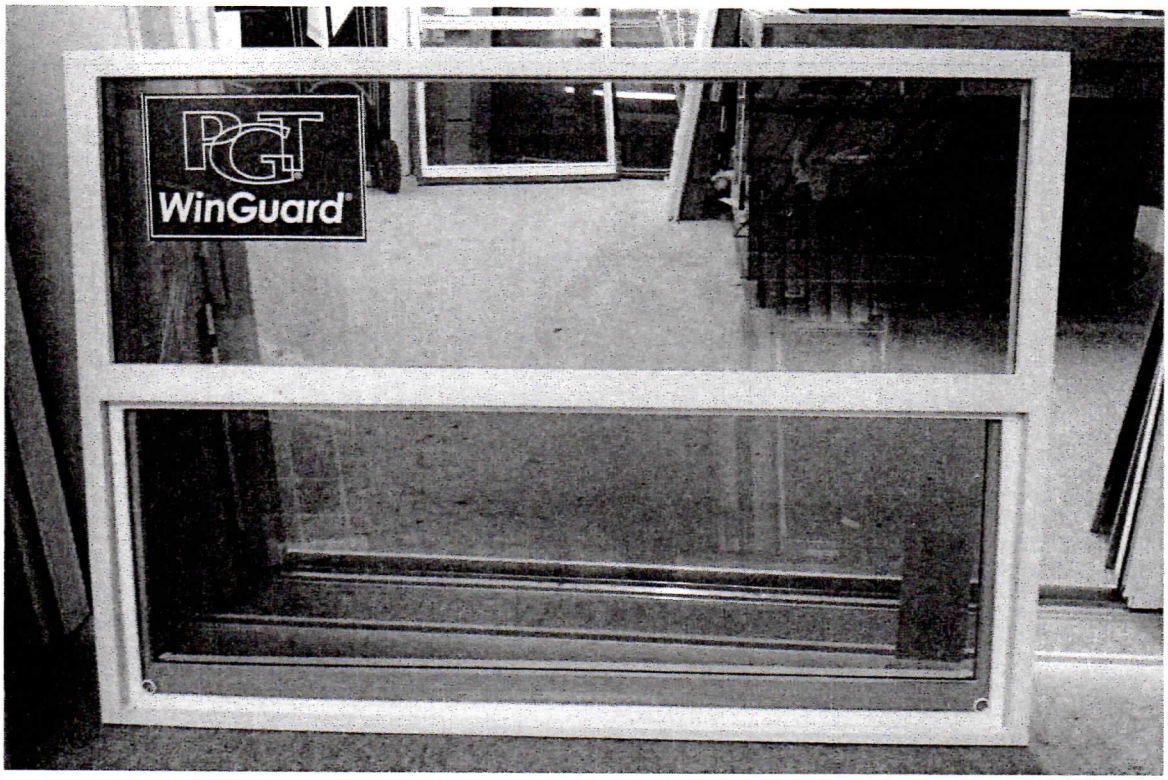

PROPOSED WINDOW STYLE

HVHZ SERIES: SMOOTH SKIN

DRS00I

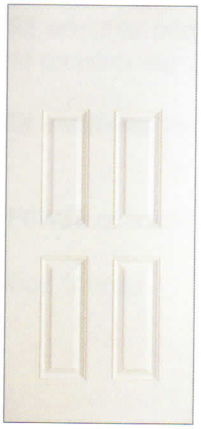

DRS40I

DRS60I

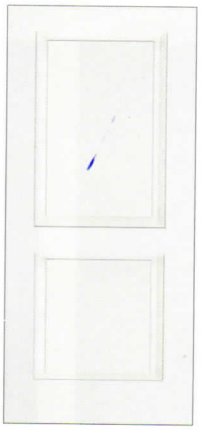

DRS2BI

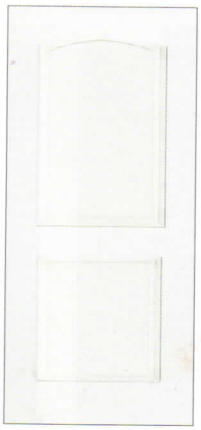

DRS2DI

DRS41I

2/0 x 6/8	RPB					
2/6 x 6/8	RPB	RPB	RPB			
2/8 x 6/8	RPB	RPB	RPB	RPB	RPB	
2/10 x 6/8			RPB			
3/0 x 6/8	RPB	RPB	RPB	RPB	RPB	RPB

DRS2GI

3/0 x 6/8	RPB

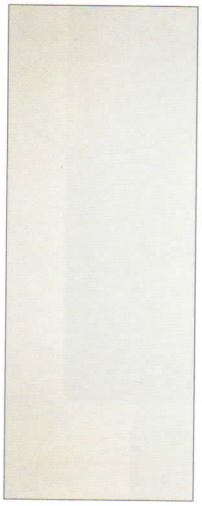

DRS0080I

DRS6080I

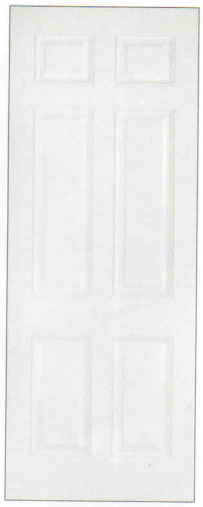

DRS2B80I

2/6 x 8/0	RPB	RPB	
2/8 x 8/0	RPB	RPB	
3/0 x 8/0	RPB	RPB	RPB

GLASSDOCTOR®
HOME • AUTO • BUSINESS
Fast & Friendly 24 hour service!
We fix your panes!®

GLASS DOCTOR OF PALM BEACH
3630 CONSUMER ST #104
WEST PALM BEACH FL 33404
(561)863-5363 Fax:(954)938-1193
Tax# 20-0976454

Quote: 2-19503
Date: 01/18/2016
Scheduled: 01/20/2016 2

Customer

ERIN ALLEN
208 SOUTH LAKESIDE DRIVE
LAKE WORTH FL 33460

H (561)312-5925

Csr: ROB Tech: DAVE Terms: C.O.D

Tax ID:858013924140C7 Sched Pref:01/20/2016 Pref Time:PM

Qty	Part / Description	Item Total
2	11-1/2" X 81-3/4" 1/4 CLR TEMP - 1/4 CLEAR TEMPERED GLASS	290.00
1	23-1/2" X 81-3/4" 1/4 CLR TEMP - 1/4 CLEAR TEMPERED GLASS	218.67
1	23-1/2" X 11-1/2" 1/4 CLR TEMP - 1/4 CLEAR TEMPERED GLASS	145.00
2	11-1/2" X 11-1/2" 1/4 CLR TEMP - 1/4 CLEAR TEMPERED GLASS	290.00
2	71-5/8" X 11-1/2" 1/4 CLR TEMP - 1/4 CLEAR TEMPERED GLASS	290.00
1	24-1/8" X 81-3/4" 1/4 CLR TEMP - 1/4 CLEAR TEMPERED GLASS	236.89
1	24-1/8" X 11-1/2" 1/4 CLR TEMP - 1/4 CLEAR TEMPERED GLASS	145.00

Notes: THIS IS FOR TRANSOM AND SIDELITE GLASS ONLY NOT DOOR GLASS IF YOU WANT NEW GLASS FOR DOORS APPROX 300.00 EACH

THIS QUOTE IS TO REPLACE PLEXIGLASS WITH CLEAR TEMPERED GLASS 50% DEPOSIT TO ORDER MATERIALS TO COMPLETE JOB PLEASE ALLOW 7 TO 10 BUSINESS DAYS FOR US TO RECEIVE GLASS TO COMPLETE JOB PLEASE CALL OUR OFFICE TO PROCEED THANKS DAVE

Job Site: ERIN ALLEN

Store Copy

GLASSDOCTOR®
HOME • AUTO • BUSINESS
Fast & Friendly 24 hour service!
We fix your panes!®

GLASS DOCTOR OF PALM BEACH
3630 CONSUMER ST #104
WEST PALM BEACH FL 33404
(561)863-5363 Fax:(954)938-1193
Tax# 20-0976454

Quote: 2-19503
Date: 01/18/2016
Scheduled: 01/20/2016 2

Customer

ERIN ALLEN
208 SOUTH LAKESIDE DRIVE
LAKE WORTH FL 33460

H (561)312-5925

Csr: ROB Tech: DAVE Terms: C.O.D

208 SOUTH LAKESIDE DRIVE
LAKE WORTH FL 33460

FOR QUESTIONS OR 24HR EMERGENCY SERVICE PLEASE CALL 954-938-4100
GLASSDOCTOR REQUIRES A 50% NON-REFUNDABLE DEPOSIT TO ORDER ANY MATERIALS NEEDED TO COMPLETE WORK.
A $30.00 FEE WILL BE APPLIED TO ALL RETURNED CHECKS.
ESTIMATES VALID FOR 30 DAYS AFTER RECEIPT

TERMS: PAYMENT DUE UPON RECEIPT

.

Questions or for 24-Hour Emergency Service Please contact 954-938-4100.
Glass Doctor requires a 50% non-refundable deposit to order any material needed to complete work.

Estimates valid for 30 days after date of receipt

A $30.00 charge will apply for returned checks

.

Material	Labor	Tax	Total	Payments	Balance
1,615.56	0.00	96.93	1,712.49	0.00	1,712.49

Store Copy

MIAMI-DADE COUNTY
DEPARTMENT OF REGULATORY AND ECONOMIC RESOURCES (RER)
BOARD AND CODE ADMINISTRATION DIVISION

MIAMI-DADE COUNTY
PRODUCT CONTROL SECTION
11805 SW 26 Street, Room 208
T (786) 315-2590 F (786) 315-2599
www.miamidade.gov/economy

NOTICE OF ACCEPTANCE (NOA)

Eco Window Systems, LLC
9114 NW 106 Street
Medley, FL 33178

SCOPE:

This NOA is being issued under the applicable rules and regulations governing the use of construction materials. The documentation submitted has been reviewed and accepted by Miami-Dade County RER - Product Control Section to be used in Miami Dade County and other areas where allowed by the Authority Having Jurisdiction (AHJ).

This NOA shall not be valid after the expiration date stated below. The Miami-Dade County Product Control Section (In Miami Dade County) and/or the AHJ (in areas other than Miami Dade County) reserve the right to have this product or material tested for quality assurance purposes. If this product or material fails to perform in the accepted manner, the manufacturer will incur the expense of such testing and the AHJ may immediately revoke, modify, or suspend the use of such product or material within their jurisdiction. RER reserves the right to revoke this acceptance, if it is determined by Miami-Dade County Product Control Section that this product or material fails to meet the requirements of the applicable building code.

This product is approved as described herein, and has been designed to comply with the Florida Building Code, including the High Velocity Hurricane Zone.

DESCRIPTION: Series "Eco-Guard 300" Aluminum Fixed Window – L.M.I.

APPROVAL DOCUMENT: Drawing No. **W09-20**, titled "Eco-Guard Series-300 Alum Fixed Wdw. (L.M.I.)", sheets 1 through 5 of 5, dated 03/23/09, with revision D dated 07/08/15, prepared by Al-Farooq Corporation, signed and sealed by Javad Ahmad, P.E., bearing the Miami-Dade County Product Control Revision stamp with the Notice of Acceptance number and expiration date by the Miami-Dade County Product Control Section.

MISSILE IMPACT RATING: Large and Small Missile Impact Resistant

LABELING: Each unit shall bear a permanent label with the manufacturer's name or logo, city, state, model/series, and following statement: "Miami-Dade County Product Control Approved", unless otherwise noted herein.

RENEWAL of this NOA shall be considered after a renewal application has been filed and there has been no change in the applicable building code negatively affecting the performance of this product.

TERMINATION of this NOA will occur after the expiration date or if there has been a revision or change in the materials, use, and/or manufacture of the product or process. Misuse of this NOA as an endorsement of any product, for sales, advertising or any other purposes shall automatically terminate this NOA. Failure to comply with any section of this NOA shall be cause for termination and removal of NOA.

ADVERTISEMENT: The NOA number preceded by the words Miami-Dade County, Florida, and followed by the expiration date may be displayed in advertising literature. If any portion of the NOA is displayed, then it shall be done in its entirety.

INSPECTION: A copy of this entire NOA shall be provided to the user by the manufacturer or its distributors and shall be available for inspection at the job site at the request of the Building Official.

This NOA **revises NOA# 14-0317.03** and consists of this page 1 and evidence pages E-1 and E-2, as well as approval document mentioned above.

The submitted documentation was reviewed by **Manuel Perez, P.E.**

MIAMI-DADE COUNTY APPROVED

8/24/15

NOTICE OF ACCEPTANCE: EVIDENCE SUBMITTED

A. DRAWINGS

1. Manufacturer's die drawings and sections.
   (Submitted under NOA#09-0413.08)
2. Drawing No **W09-20**, titled "Eco-Guard Series-300 Alum. Fixed Wdw. (L.M.I.)", sheets 1 through 5 of 5, dated 03/23/09, with revision D dated 07/08/15, prepared by Al-Farooq Corporation, signed and sealed by Javad Ahmad, P.E.

B. TESTS

1. Test reports on: 1) Air Infiltration Test, per FBC, TAS 202-94
   2) Uniform Static Air Pressure Test, Loading per FBC TAS 202-94
   3) Water Resistance Test, per FBC, TAS 202-94
   along with installation diagram of a 97 1/4" wide x 96 1/8" high Eco-Guard series 300 aluminum double fixed window, prepared by Hurricane Engineering & Testing Inc., Test Report No. **HETI-08-2192A**, dated 01/15/09, signed and sealed by Candido F. Font, P.E. ***(Submitted under NOA#09-0413.08)***
2. Test reports on: 1) Large Missile Impact Test per FBC, TAS 201-94
   2) Cyclic Wind Pressure Loading per FBC, TAS 203-94
   along with installation diagram of a 97 1/4" wide x 96 1/8" high Eco-Guard series 300 aluminum double fixed window, prepared by Hurricane Engineering & Testing Inc., Test Report No. **HETI-08-2192B**, dated 01/15/09, signed and sealed by Candido F. Font, P.E. ***(Submitted under NOA#09-0413.08)***
3. Test reports on: 1) Air Infiltration Test, per FBC, TAS 202-94
   2) Uniform Static Air Pressure Test, Loading per FBC, TAS 20294
   3) Water Resistance Test, per FBC, TAS 202-94
   along with installation diagram of a 48 1/4" wide x 96 3/8" high Eco-Guard series 300 aluminum circular arch top fixed window, prepared by Hurricane Engineering & Testing Inc., Test Report No. **HETI-08-2193A**, dated 01/15/09, signed and sealed by Candido F. Font, P.E. ***(Submitted under NOA#09-0413.08)***
4. Test reports on: 1) Large Missile Impact Test per FBC, TAS 201-94
   2) Cyclic Wind Pressure Loading per FBC, TAS 203-94
   along with installation diagram of a 48 1/4" wide x 96 3/8" high Eco-Guards 300 aluminum circular arch top fixed window, prepared by Hurricane Engineering & Testing Inc., Test Report No. **HETI-08-2193B**, dated 01/15/09, signed and sealed by Candido F. Font, P.E. ***(Submitted under NOA#09-0413.08)***
5. Test reports on: 1) Large Missile Impact Test per FBC, TAS 201-94
   2) Cyclic Wind Pressure Loading per FBC, TAS 203-94
   along with installation diagram of a 47 5/8" wide x 96" high Eco-Guard series 300 aluminum triangular top fixed window, prepared by Hurricane Engineering & Testing Inc., Test Report No. **HETI-08-2194**, dated 01/15/09, signed and sealed by Candido F. Font, P.E. ***(Submitted under NOA#09-0413.08)***

Manuel Perez, P.E.
Product Control Examiner
NOA No. 15-0715.10
Expiration Date: June 17, 2019
Approval Date: September 03, 2015

NOTICE OF ACCEPTANCE: EVIDENCE SUBMITTED

B. TESTS (CONTINUED)

6. Test reports on: 1) Air Infiltration Test, per FBC, TAS 202-94
   2) Uniform Static Air Pressure Test, Loading per FBC TAS 202-94
   3) Water Resistance Test, per FBC, TAS 202-94

   along with installation diagram of a 50 5/8" wide x 63 1/4" high Eco-Guard series 300 aluminum fixed window, prepared by Hurricane Engineering & Testing Inc., Test Report No. **HETI-08-2195A**, dated 01/15/09, signed and sealed by Candido F. Font, P.E. ***(Submitted under NOA#09-0413.08)***

C. CALCULATIONS

1. Anchor verification calculations and structural analysis, complying with **FBC 5th Edition (2014)**, dated 07/08/15, prepared by Al-Farooq Corporation, signed and sealed by Javad Ahmad, P.E.
2. Glazing complies with **ASTM E1300-09**

D. QUALITY ASSURANCE

1. Miami-Dade Department of Regulatory and Economic Resources (RER)

E. MATERIAL CERTIFICATIONS

1. Notice of Acceptance No. **14-0916.10** issued to **Kuraray America, Inc.** for their **"Butacite® PVB Glass Interlayer"** dated 04/25/15, expiring on 12/11/16.
2. Notice of Acceptance No. **14-0916.11** issued to **Kuraray America, Inc.** for their **"SentryGlas® (Clear and White) Glass Interlayers"** dated 06/25/15, expiring on 07/04/18.

F. STATEMENTS

1. Statement letter of conformance, complying with **FBC-5th Edition (2014)**, and of no financial interest, dated July 8, 2015, issued by Al-Farooq Corporation, signed and sealed by Javad Ahmad, P.E.

G. OTHER

1. Notice of Acceptance No. **14-0317.03**, issued to Eco Window Systems, LLC for their Series "Eco-Guard 300" Aluminum Fixed Window – L.M.I., approved on 04/10/14 and expiring on 06/17/19.

Manuel Perez, P.E.
Product Control Examiner
NOA No. 15-0715.10
Expiration Date: June 17, 2019
Approval Date: September 03, 2015

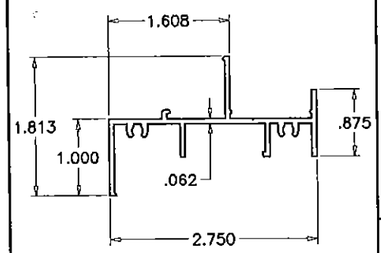

1 FRAME HEAD/SILL/JAMB

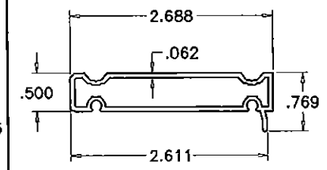

7 FLUSH FRAME ADAPTER

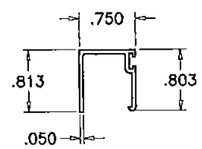

2 GLAZING BEAD

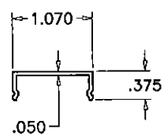

3 ANCHOR COVER

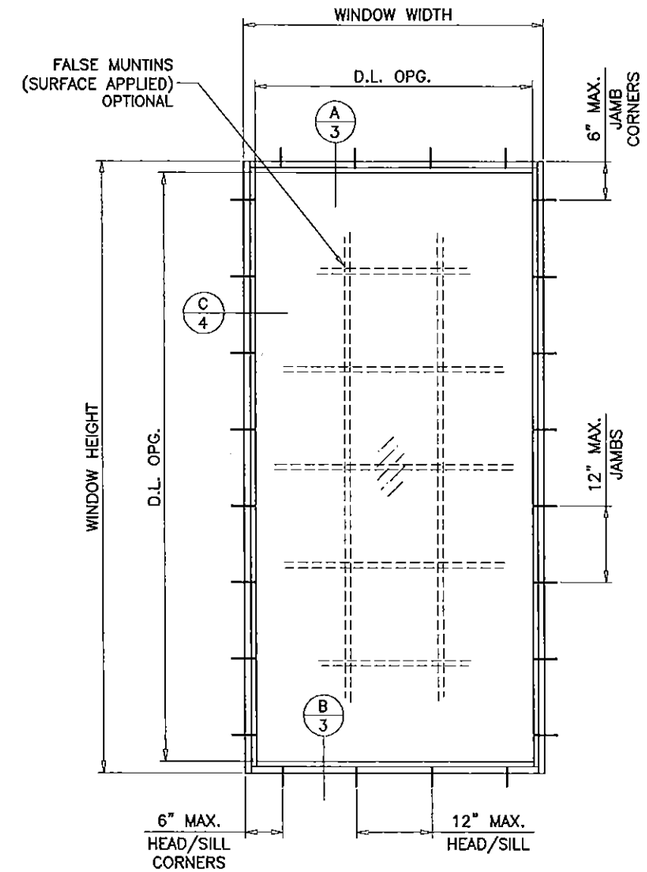

TYPICAL ELEVATION

GLASS D.L.O. DIMS.

D.L.O. HEIGHT = WINDOW HEIGHT − 3.625"
D.L.O. WIDTH = WINDOW WIDTH − 3.625"

ECO-GUARD SERIES-300
ALUMINUM FIXED WINDOW

DESIGN LOAD RATINGS FOR THESE WINDOWS TO BE AS PER CHARTS SHOWN ON SHEETS 2.

APPROVAL APPLIES TO SINGLE UNITS OR SIDE BY SIDE COMBINATIONS OF FIX./FIX. OR FIXED WITH OTHER WINDOW TYPES IN MODULES OF TWO OR MORE WINDOWS USING MIAMI-DADE COUNTY APPROVED MULLIONS IN BETWEEN. LOWER DESIGN PRESSURE FROM WINDOWS OR MULLION APPROVAL WILL APPLY TO ENTIRE SYSTEM.

THIS PRODUCT HAS BEEN DESIGNED AND TESTED TO COMPLY WITH THE REQUIREMENTS OF THE FLORIDA BUILDING CODE INCLUDING HIGH VELOCITY HURRICANE ZONE (HVHZ).

WOOD BUCKS BY OTHERS, MUST BE ANCHORED PROPERLY TO TRANSFER LOADS TO THE STRUCTURE.

ANCHORS SHALL BE AS LISTED, SPACED AS SHOWN ON DETAILS, ANCHORS EMBEDMENT TO BASE MATERIAL SHALL BE BEYOND WALL DRESSING OR STUCCO.

ANCHORING OR LOADING CONDITIONS NOT SHOWN IN THESE DETAILS ARE NOT PART OF THIS APPROVAL.

A LOAD DURATION INCREASE IS USED IN DESIGN OF ANCHORS INTO WOOD ONLY.

MATERIALS INCLUDING BUT NOT LIMITED TO STEEL/METAL SCREWS, THAT COME INTO CONTACT WITH OTHER DISSIMILAR MATERIALS SHALL MEET THE REQUIREMENTS OF THE FLORIDA BLDG. CODE.

THESE WINDOWS ARE RATED FOR LARGE & SMALL MISSILE IMPACT. SHUTTERS ARE NOT REQUIRED.

Engr: JAVAD AHMAD
CIVIL
FLA. PE # 70592
C.A.N. 3538

JUL 10 2015

PRODUCT REVISED
as complying with the Florida Building Code
Acceptance No 15-0715.10
Expiration Date June 17, 2019
By Manuel Perez
Miami Dade Product Control

AL-FAROOQ CORPORATION
ENGINEERS & PRODUCT DEVELOPMENT
1235 S.W. 87 AVE
MIAMI, FLORIDA 33174
TEL. (305) 264-8100 FAX. (305) 262-6978
COMP-ANL\W09-20ECO

ECO-GUARD SERIES-300 ALUM FIXED WDW. (L.M.I.)

ECO WINDOW SYSTEMS, LLC.
9114 N.W. 106 STREET
MEDLEY, FL. 33178
TEL (305) 885-5299 FAX (305) 885-5902

revisions:

no	date	by	description
A	05.18.09		REV. PER BCCO COMMENTS
B	01.30.12		UPDATED TO 2010 FBC
C	01.11.13		MANUF. ADDRESS REV.
D	07.08.15		UPDATED TO 2014 FBC

date: 03-23-09
scale: 1/2"=1'-0"
dr. by: HAMID
chk. by:

drawing no.
W09-20

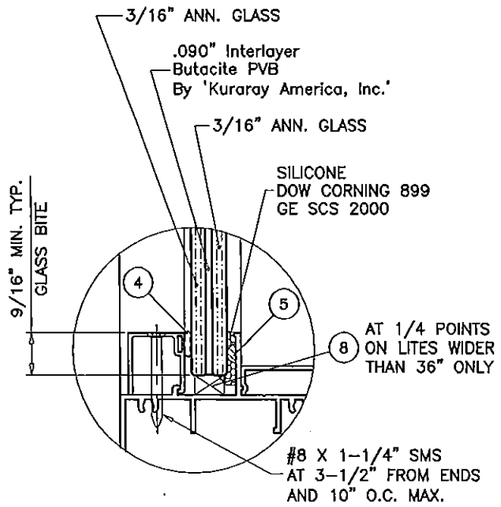

GLASS TYPE 'C'

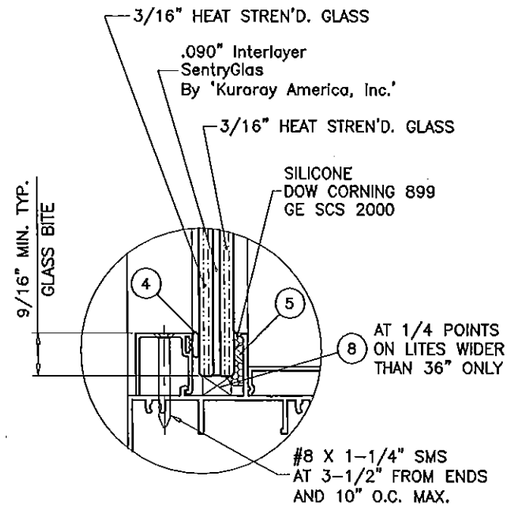

GLASS TYPE 'D'

GLAZING OPTIONS

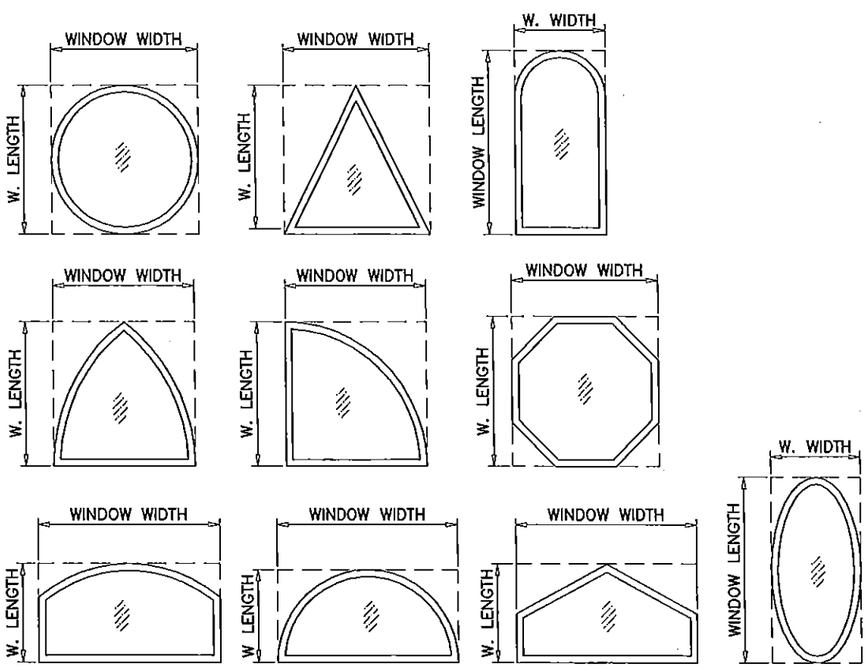

ALLOWABLE LOADS FOR ALTERNATE SHAPES AS SHOWN ABOVE OR SIMILAR CAN BE VERIFIED BY INSCRIBING PICTURE WINDOW SHAPE WITHIN SQUARE OR RECTANGLE AS SHOWN IN DOTTED LINES AND OBTAINING ALLOWABLE LOADS FROM THOSE SHAPES.

DESIGN LOAD CAPACITY - PSF					
WINDOW DIMS.		GLASS TYPE 'C'		GLASS TYPE 'D'	
WIDTH (W)	LENGTH (L)	EXT.(+)	INT.(-)	EXT.(+)	INT.(-)
24"	36"	75.0	80.0	80.0	90.0
30"		75.0	80.0	80.0	90.0
36"		75.0	80.0	80.0	90.0
42"		75.0	80.0	80.0	90.0
48"		75.0	80.0	80.0	90.0
54"		75.0	80.0	80.0	90.0
60"		75.0	80.0	80.0	90.0
66"		75.0	80.0	80.0	90.0
72"		75.0	80.0	80.0	90.0
24"	48"	75.0	80.0	80.0	90.0
30"		75.0	80.0	80.0	90.0
36"		75.0	80.0	80.0	90.0
42"		75.0	80.0	80.0	90.0
48"		75.0	80.0	80.0	90.0
54"		75.0	80.0	80.0	90.0
60"		75.0	80.0	80.0	90.0
66"		75.0	80.0	80.0	90.0
72"		75.0	76.6	80.0	90.0
24"	60"	75.0	80.0	80.0	90.0
30"		75.0	80.0	80.0	90.0
36"		75.0	80.0	80.0	90.0
42"		75.0	80.0	80.0	90.0
48"		75.0	80.0	80.0	90.0
54"		66.8	71.3	80.0	90.0
60"		60.2	64.2	80.0	90.0
66"		60.2	64.2	80.0	90.0
72"		60.2	64.2	80.0	90.0
24"	72"	75.0	80.0	80.0	90.0
30"		75.0	80.0	80.0	90.0
36"		75.0	80.0	80.0	90.0
42"		75.0	80.0	80.0	90.0
48"		75.0	76.6	80.0	90.0
54"		66.8	71.3	80.0	90.0
60"		60.2	64.2	80.0	90.0
24"	84"	75.0	80.0	80.0	90.0
30"		75.0	80.0	80.0	90.0
36"		75.0	80.0	80.0	90.0
42"		70.0	70.0	80.0	90.0
48"		65.6	65.6	80.0	90.0
54"		64.3	64.3	80.0	90.0
24"	96"	75.0	80.0	80.0	90.0
30"		75.0	80.0	80.0	90.0
36"		75.0	76.2	80.0	90.0
42"		64.6	64.6	80.0	90.0
48"		59.9	59.9	80.0	90.0
24"	108"	75.0	80.0	80.0	90.0
30"		75.0	80.0	80.0	90.0
36"		74.5	74.5	80.0	90.0
42"		61.5	61.5	80.0	90.0
24"	120"	75.0	80.0	80.0	90.0
30"		75.0	80.0	80.0	90.0
36"		74.5	74.5	80.0	90.0

DESIGN LOAD CAPACITY - PSF					
WINDOW DIMS.		GLASS TYPE 'C'		GLASS TYPE 'D'	
WIDTH (W)	LENGTH (L)	EXT.(+)	INT.(-)	EXT.(+)	INT.(-)
26-1/2"	26"	75.0	80.0	80.0	90.0
37"		75.0	80.0	80.0	90.0
53-1/8"		75.0	80.0	80.0	90.0
74"		75.0	80.0	80.0	90.0
26-1/2"	38-3/8"	75.0	80.0	80.0	90.0
37"		75.0	80.0	80.0	90.0
53-1/8"		75.0	80.0	80.0	90.0
74"		75.0	80.0	80.0	90.0
26-1/2"	50-5/8"	75.0	80.0	80.0	90.0
37"		75.0	80.0	80.0	90.0
53-1/8"		71.3	76.0	80.0	90.0
74"		71.3	73.1	80.0	90.0
26-1/2"	63"	75.0	80.0	80.0	90.0
37"		75.0	80.0	80.0	90.0
53-1/8"		67.9	72.5	80.0	90.0
26-1/2"	76"	75.0	80.0	80.0	90.0
37"		75.0	80.0	80.0	90.0
53-1/8"		67.9	69.9	80.0	90.0

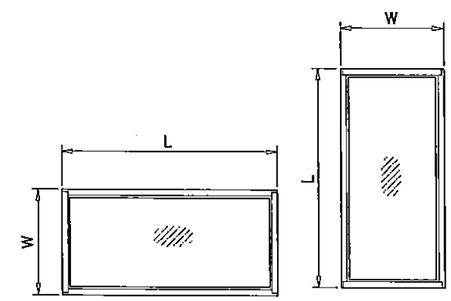

NOTE:
WIDTH AND LENGTH DIMENSIONS CAN BE ORIENTED VERTICALLY OR HORIZONTALLY AS SHOWN ABOVE.

NOTE:
GLASS CAPACITIES ON THIS SHEET ARE BASED ON ASTM E1300-09 (3 SEC. GUSTS).

Engr: JAVAD AHMAD
CML
FLA. PE # 70592
C.A.N. 3538

JUL 10 2015

PRODUCT REVISED
as complying with the Florida
Building Code
Acceptance No 15-0715.10
Expiration Date June 17, 2019
By Mayeed Siss
Miami Dade Product Control

AL-FAROOQ CORPORATION
ENGINEERS & PRODUCT DEVELOPMENT
1235 S.W. 87 AVE
MIAMI, FLORIDA 33174
TEL (305) 264-8100 FAX (305) 262-6978

COMP-ANL\W09-20ECO

ECO-GUARD SERIES-300 ALUM FIXED WDW. (L.M.I.)

ECO WINDOW SYSTEMS, LLC.
9114 N.W. 106 STREET
MEDLEY, FL. 33178
TEL. (305) 885-5299 FAX (305) 885-5902

revisions:

no	date	by	description
A	05.18.09		REV. PER BCCO COMMENTS
B	01.30.12		UPDATED TO 2010 FBC
C	01.11.13		MANUF. ADDRESS REV.
D	07.08.15		UPDATED TO 2014 FBC

date: 03-23-09
scale: 1/2"-1'-0"
dr. by: HAMID
chk. by:

drawing no. W09-20

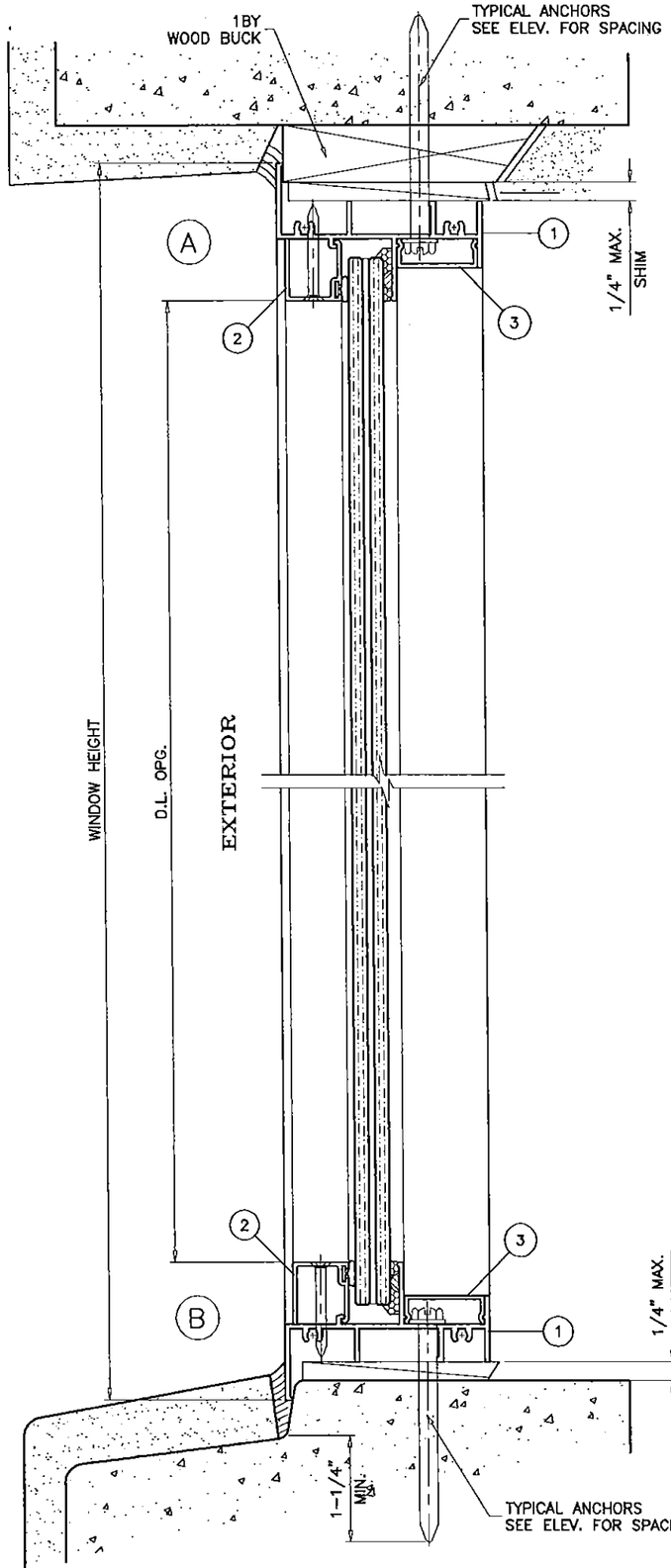

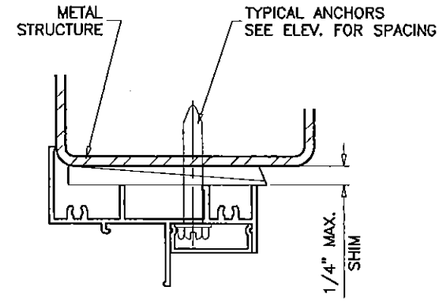

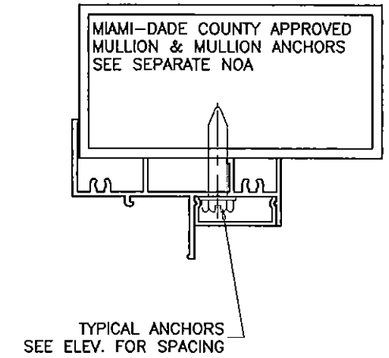

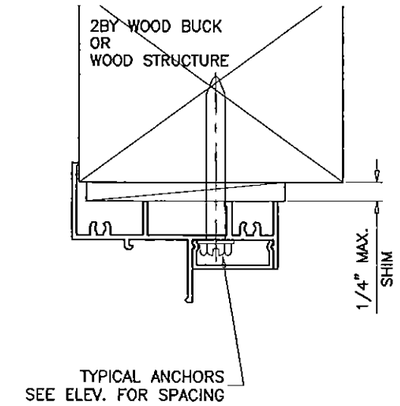

WOOD BUCKS AND METAL STRUCTURE NOT BY ECO WDW. MUST SUSTAIN LOADS IMPOSED BY GLAZING SYSTEM AND TRANSFER THEM TO THE BUILDING STRUCTURE.

TYPICAL ANCHORS: SEE ELEV. FOR SPACING

1/4" DIA. ULTRACON BY 'ELCO' (Fu=177 KSI, Fy=155 KSI)

INTO 2BY WOOD BUCKS OR WOOD STRUCTURES
1-1/2" MIN. PENETRATION INTO WOOD

THRU 1BY BUCKS INTO CONC. OR MASONRY
1-1/4" MIN. EMBED INTO CONC. OR MASONRY

DIRECTLY INTO CONC. OR MASONRY
1-1/4" MIN. EMBED INTO CONC. OR MASONRY

#14 SMS OR SELF DRILLING SCREWS (GRADE 2 CRS)

INTO MIAMI-DADE COUNTY APPROVED MULLIONS (MIN. THK. = 1/8")

INTO METAL STRUCTURES
STEEL : 1/8" THK. MIN. (Fy = 36 KSI MIN.)
ALUMINUM : 1/8" THK. MIN. (6063-T5 MIN.)
(STEEL IN CONTACT WITH ALUMINUM TO BE PLATED OR PAINTED)

TYPICAL EDGE DISTANCE

INTO CONCRETE AND MASONRY = 2-1/2" MIN.
INTO WOOD STRUCTURE = 1" MIN.
INTO METAL STRUCTURE = 3/4" MIN.

WOOD AT HEAD, SILL OR JAMBS SG = 0.55 MIN.
CONCRETE AT HEAD, SILL OR JAMBS f'c = 3000 PSI MIN.
C-90 HOLLOW/FILLED BLOCK AT JAMBS f'm = 1500 PSI MIN.

SEALANT:

ALL JOINTS AND FRAME CONNECTIONS SEALED WITH JOINT SEALER.

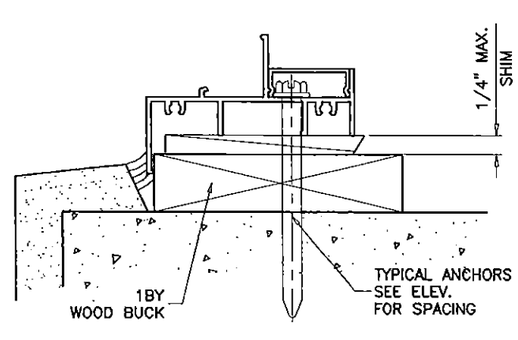

Engr: JAVAD AHMAD
CIVIL
FLA. PE# 70592
C.A.N. 3538

JUL 1 0 2015

PRODUCT REVISED
as complying with the Florida
Building Code
Acceptance No 15.0715.10
Expiration Date June 17, 2019
By Manuel Perez
Miami Dade Product Control

AL-FAROOQ CORPORATION
ENGINEERS & PRODUCT DEVELOPMENT
1235 S.W. 87 AVE
MIAMI, FLORIDA 33174
TEL. (305) 264-8100 FAX. (305) 262-6978
COMP-ANL\W09-20ECO

ECO-GUARD SERIES-300 ALUM FIXED WDW. (L.M.I.)

ECO WINDOW SYSTEMS, LLC.
9114 N.W. 106 STREET
MEDLEY, FL. 33178
TEL. (305) 885-5299 FAX (305) 885-5902

revisions:

no	date	by	description
A	05.18.09		NO CHANGE THIS SHEET
B	01.30.12		NO CHANGE THIS SHEET
C	01.11.13		MANUF. ADDRESS REV.
D	07.08.15		UPDATED TO 2014 FBC

date: 03-23-09
scale: 1/2" = 1"
dr. by: HAMID
chk. by:

drawing no.
W09-20

sheet 3 of 5

ITEM #	PART #	REQD.	DESCRIPTION	MATERIAL	MANF./SUPPLIER/REMARKS
1	FY301	2	FRAME HEAD/SILL/JAMB	6063-T6	–
2	FY302	AS REQD.	GLAZING BEAD- 7/16" GLASS	6063-T6	–
3	FY303	AS REQD.	ANCHOR COVER	6063-T5	–
4	E203	AS REQD.	GLAZING BEAD BULB	NEOPRENE	ULTRAFAB
5	FLB-50	1	GLASS SPACER – 1/8" HIGH	SILICONE	FRANK LOWE
6	#10 x 1"	8	FRAME ASSEMBLY SCREWS	CRS	PH SMS
7	FY120	–	FLUSH FRAME ADAPTER	6063-T6	OPTIONAL
8	–	2/ LITE	SETTING BLOCK	EPDM	DUROMETER 85±5 SHORE A

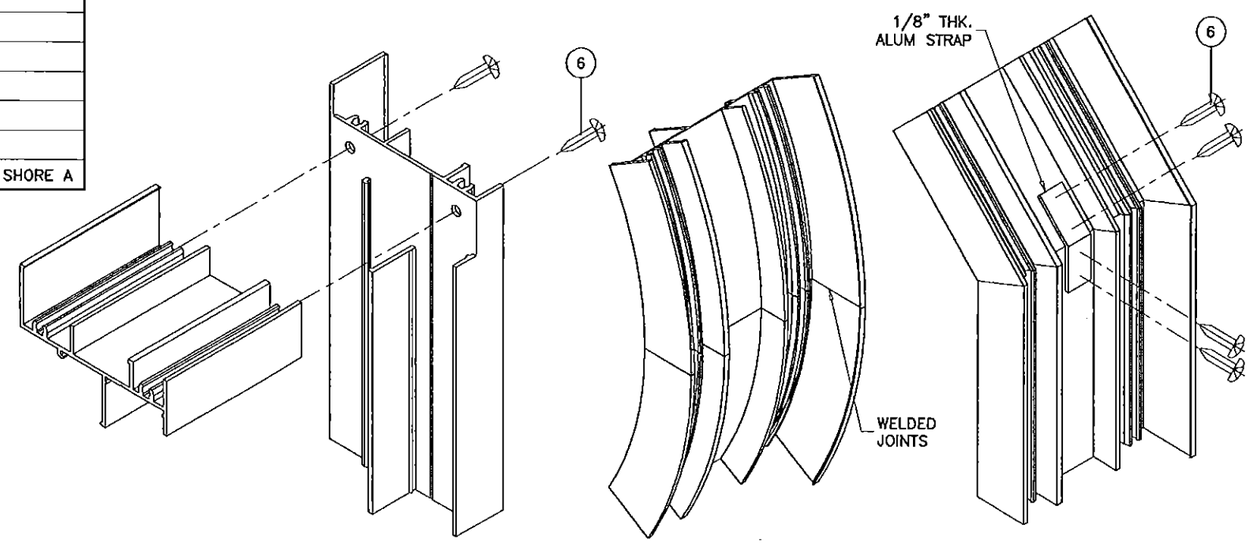

RECT. OR SQUARE WINDOWS

CIRCULAR WINDOWS

MITER CORNERS

CORNER DETAILS

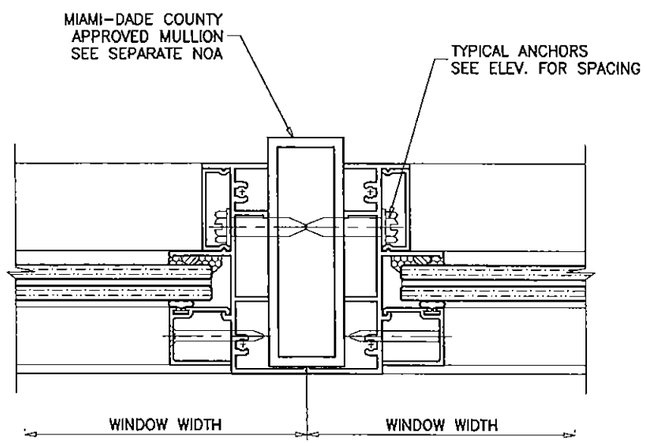

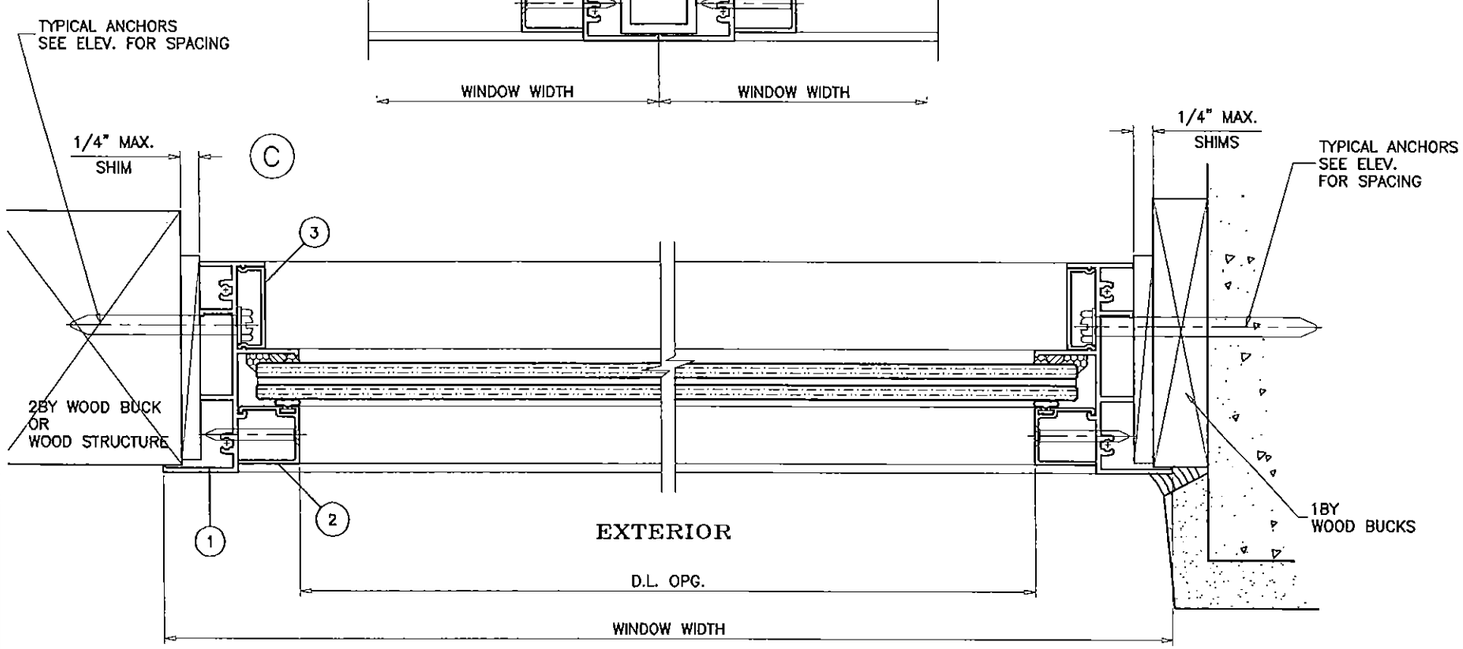

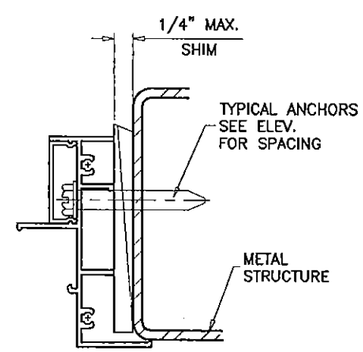

Engr: JAVAD AHMAD
CML
FLA. PE # 70592
C.A.N. 3538

JUL 10 2015

PRODUCT REVISED
as complying with the Florida
Building Code
Acceptance No 15-0715.10
Expiration Date June 17, 2019
By Manuel Perez
Miami-Dade Product Control

AL-FAROOQ CORPORATION
ENGINEERS & PRODUCT DEVELOPMENT
1235 S.W. 87 AVE
MIAMI, FLORIDA 33174
TEL. (305) 264-8100 FAX. (305) 262-6978
COMP-ANL\W09-20ECO

ECO-GUARD SERIES-300 ALUM FIXED WDW. (L.M.I.)

ECO WINDOW SYSTEMS, LLC.
9114 N.W. 106 STREET
MEDLEY, FL. 33178
TEL. (305) 885-5299 FAX (305) 885-5902

revisions:

no	date	by	description
A	05.18.09		NO CHANGE THIS SHEET
B	01.30.12		NO CHANGE THIS SHEET
C	01.11.13		MANUF. ADDRESS REV.
D	07.08.15		UPDATED TO 2014 FBC

date: 03-23-09
scale: 1/2" = 1"
dr. by: HAMID
chk. by:

drawing no.
W09-20

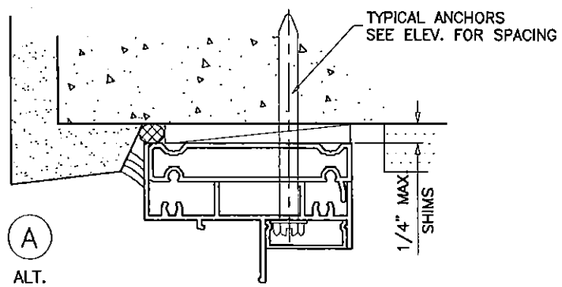

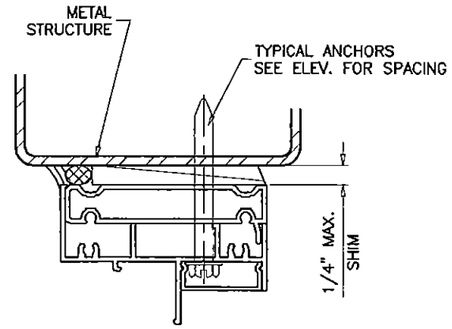

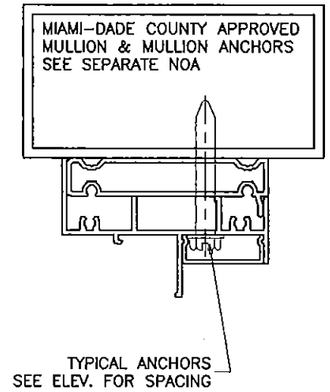

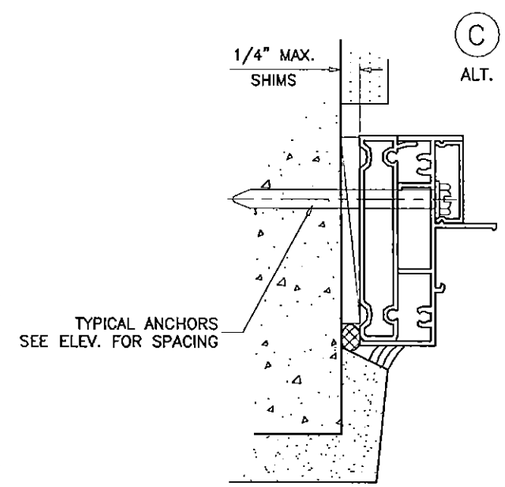

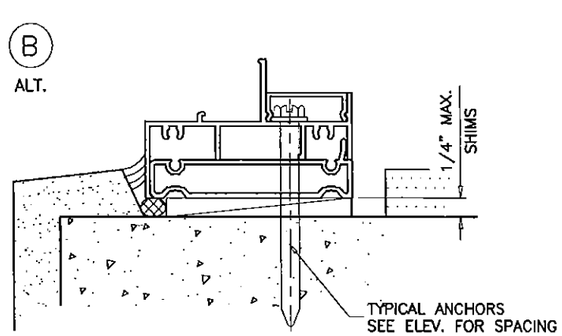

INSTALLATION DETAILS WITH FLUSH FRAME ADAPTER

Engr: JAVAD AHMAD
CIVIL
FLA. PE # 70592
C.A.N. 3538

JUL 10 2015

PRODUCT REVISED
as complying with the Florida
Building Code
Acceptance No 15-0715.10
Expiration Date June 17, 2019
By Manuel Perez
Miami Dade Product Control

AL-FAROOQ CORPORATION
ENGINEERS & PRODUCT DEVELOPMENT
1235 S.W. 87 AVE
MIAMI, FLORIDA 33174
TEL. (305) 264-8100 FAX. (305) 262-6978

COMP-ANL\W09-20ECO

ECO-GUARD SERIES-300 ALUM. FIXED WDW. (L.M.I.)

ECO WINDOW SYSTEMS, LLC.
9114 N.W. 106 STREET
MEDLEY, FL. 33178
TEL. (305) 885-5299 FAX (305) 885-5902

revisions:

no	date	by	description
A	05.18.09		NO CHANGE THIS SHEET
B	01.30.12		NO CHANGE THIS SHEET
C	01.11.13		MANUF. ADDRESS REV.
D	07.08.15		NO CHANGE THIS SHEET

date: 03-23-09
scale: 1/2" = 1"
dr. by: HAMID
chk. by:

drawing no.
W09-20

MIAMI-DADE COUNTY
PRODUCT CONTROL SECTION
11805 SW 26 Street, Room 208
Miami, Florida 33175-2474
T (786) 315-2590 F (786) 315-2599
www.miamidade.gov/economy

DEPARTMENT OF REGULATORY AND ECONOMIC RESOURCES (RER)
BOARD AND CODE ADMINISTRATION DIVISION

NOTICE OF ACCEPTANCE (NOA)

ECO Windows Systems, LLC
9114 N. W. 106th Street,
Medley, FL 33178

SCOPE:

This NOA is being issued under the applicable rules and regulations governing the use of construction materials. The documentation submitted has been reviewed and accepted by Miami-Dade County RER -Product Control Section to be used in Miami Dade County and other areas where allowed by the Authority Having Jurisdiction (AHJ).

This NOA shall not be valid after the expiration date stated below. The Miami-Dade County Product Control Section (In Miami Dade County) and/or the AHJ (in areas other than Miami Dade County) reserve the right to have this product or material tested for quality assurance purposes. If this product or material fails to perform in the accepted manner, the manufacturer will incur the expense of such testing and the AHJ may immediately revoke, modify, or suspend the use of such product or material within their jurisdiction. RER reserves the right to revoke this acceptance, if it is determined by Miami-Dade County Product Control Section that this product or material fails to meet the requirements of the applicable building code.

This product is approved as described herein, and has been designed to comply with the Florida Building Code, including the High Velocity Hurricane Zone.

DESCRIPTION: Series "700" Aluminum Sliding Glass Door w/ Reinforcements-L.M.I.

APPROVAL DOCUMENT: Drawing No. **W13-49 REV C**, titled "Series- 700 Alum SLD. Glass Door (L.M.I.)", sheets 1 through 12 of 12, prepared by Al-Farooq Corporation, dated 09/27/13 and last revised on DEC 02, 2015, signed and sealed by Javad Ahmad, P.E., bearing the Miami-Dade County Product Control Revision stamp with the Notice of Acceptance number and expiration date by the Miami-Dade County Product Control Section.

MISSILE IMPACT RATING: Large and Small Missile Impact Resistant

Limitations:

1. See Design Pressures Vs Reinforcing, glass types and anchor capacity charts in sheet **5**. Exterior (positive) design pressures are limited to **+70 PSF** w / **2-3/4"** sill riser and **+47.0 PSF** w/ **2"** sill riser. Lower design Pressure from charts applies to entire system.
2. See approved configurations in sheets 1 thru 4. The max frame are of alternate sizes not to exceed tested frame area per FBC requirements.

LABELING: Each unit shall bear a permanent label with the manufacturer's name or logo, city, state and series and following statement: "Miami-Dade County Product Control Approved", noted herein.

RENEWAL of this NOA shall be considered after a renewal application has been filed and there has been no change in the applicable building code negatively affecting the performance of this product.

TERMINATION of this NOA will occur after the expiration date or if there has been a revision or change in the materials, use, and/or manufacture of the product or process. Misuse of this NOA as an endorsement of any product, for sales, advertising or any other purposes shall automatically terminate this NOA. Failure to comply with any section of this NOA shall be cause for termination and removal of NOA.

ADVERTISEMENT: The NOA number preceded by the words Miami-Dade County, Florida, and followed by the expiration date may be displayed in advertising literature. If any portion of the NOA is displayed, then it shall be done in its entirety.

INSPECTION: A copy of this entire NOA shall be provided to the user by the manufacturer or its distributors and shall be available for inspection at the job site at the request of the Building Official.

This NOA **revises #13-0912.02** consists of this page 1 and evidence pages E-1, as well as approval document mentioned above.

The submitted documentation was reviewed by **Ishaq I. Chanda, P.E.**

MIAMI-DADE COUNTY APPROVED
12/4/15

NOA No. 15-0612.05
Expiration Date: March 20, 2019
Approval Date: December 17, 2015

NOTICE OF ACCEPTANCE: EVIDENCE SUBMITTED

A. DRAWINGS

1. Manufacturer's die drawings and sections (see below)
2. Drawing No. **W13-49 REV C**, titled "Series- 700 Alum SLD. Glass Door (L.M.I.)", sheets 1 through 12 of 12, prepared by Al-Farooq Corporation, dated 09/27/13 and last revised on DEC 02, 2015, signed and sealed by Javad Ahmad, P.E.

B. TESTS (Submitted under file #13-0912.02)

1. Test reports on: 1) Air Infiltration Test, per FBC, TAS 202-94
   2) Uniform Static Air Pressure Test, Loading per FBC TAS 202-94
   3) Water Resistance Test, per FBC, TAS 202-94
   4) Large Missile Impact Test per FBC, TAS 201-94
   5) Cyclic Wind Pressure Loading per FBC, TAS 203-94
   6) Forced Entry Test, per FBC 2411 3.2.1, TAS 202-94

   along with marked-up drawings and installation diagrams of Alum sliding Glass doors, prepared by Fenestration Testing Lab, Inc., Test Report No. **FTL-7405** dated 09/13/2013 and last revised on 02/10/2014, signed and sealed by Marlin D. Brinson, P. E.
   Note: The above referenced test report has an addendum letter dated FEB 10, 2014, issued by Fenestration Testing Lab, Inc., signed by Ms. Iliana Sanchez, test report Author.

C. CALCULATIONS

1. Anchor verification calculations and structural analysis, complying with FBC-2014 (5th Edition), prepared by Al Farooq Corporation, dated 06/10/15 and last revised on DEC 02, 2015, signed and sealed by Javad Ahmad, P.E.
2. Glazing complies w/ ASTME-1300-02, -04 & -09.

D. QUALITY ASSURANCE

1. Miami Dade Department of Regulatory and Economic Resources (RER).

E. MATERIAL CERTIFICATIONS

1. Notice of Acceptance No. **14-0916.10** issued to **Kuraray America, Inc.** (Former E.I. DuPont DeNemours & Co., Inc.) for the "**Kuraray Butacite ® PVB interlayer**", expiring on 12/11/16.
2. Notice of Acceptance No. **14-0916.11** issued to **Kuraray America, Inc.** (Former E.I. DuPont DeNemours & Co., Inc.) for the "**Sentry Glass ® (Clear and White) Glass Interlayers**", expiring on 07/04/17.

F. STATEMENTS

1. Statement letter of conformance to FBC 2014(5th Edition) and letter of no financial interest, prepared by Al Farooq Corporation, dated 06/10/15, signed and sealed by Javad Ahmad, P.E.
2. Lab compliance as part of the above referenced test report.

G. OTHER

1. Test proposal, dated 03/25/13 approved by Jaime D. Gascon, P.E.

Ishaq I. Chanda

Ishaq I. Chanda, P.E.
Product Control Examiner
NOA No. 15-0612.05
Expiration Date: March 20, 2019
Approval Date: December 17, 2015

INSTRUCTIONS:

USE CHARTS AS FOLLOWS.

STEP 1 SEE CHART #1 ON SHEET 5 FOR GLASS CAPACITY AND REINFORCING REQUIREMENTS.

STEP 2 SELECT SILL TYPE FROM SHEET 7 AND LIMIT EXT.(+) DESIGN PRESSURE AS SHOWN ON DETAIL.

STEP 3 SEE CHART #2 ON SHEET 5 FOR ANCHOR CAPACITY.

STEP 4 THE LOWEST VALUE RESULTING FROM STEPS 1 THRU 3 SHALL APPLY TO ENTIRE SYSTEM.

DAYLITE OPENINGS WIDTHS:
FIXED STILE–INTERLOCK = PANEL WIDTH – 7.125"
INTERLOCK–ASTRAGAL = PANEL WIDTH – 7.250"

DAYLITE OPENING HEIGHT:
PANEL HEIGHT – 6.50"

PANEL HEIGHT = DOOR FRAME HEIGHT – 1.5625"

THESE DOORS ARE RATED FOR LARGE & SMALL MISSILE IMPACT. SHUTTERS ARE NOT REQUIRED.

SERIES–700
ALUMINUM SLIDING GLASS DOOR

THIS PRODUCT HAS BEEN DESIGNED AND TESTED TO COMPLY WITH THE REQUIREMENTS OF THE 2014 (5TH EDITION) FLORIDA BUILDING CODE INCLUDING HIGH VELOCITY HURRICANE ZONE (HVHZ).

1BY OR 2BY WOOD BUCKS BY OTHERS, MUST BE ANCHORED PROPERLY TO TRANSFER LOADS TO THE STRUCTURE.

ANCHORS SHALL BE AS LISTED, SPACED AS SHOWN ON DETAILS, ANCHORS EMBEDMENT TO BASE MATERIAL SHALL BE BEYOND WALL DRESSING OR STUCCO.

ANCHORING OR LOADING CONDITIONS NOT SHOWN IN THESE DETAILS ARE NOT PART OF THIS APPROVAL.

A LOAD DURATION INCREASE IS USED IN DESIGN OF ANCHORS INTO WOOD ONLY.

ALL SHIMS TO BE HIGH IMPACT, NON–METALLIC AND NON–COMPRESSIBLE.

MATERIALS INCLUDING BUT NOT LIMITED TO STEEL/METAL SCREWS, THAT COME INTO CONTACT WITH OTHER DISSIMILAR MATERIALS SHALL MEET THE REQUIREMENTS OF THE FLORIDA BLDG. CODE.

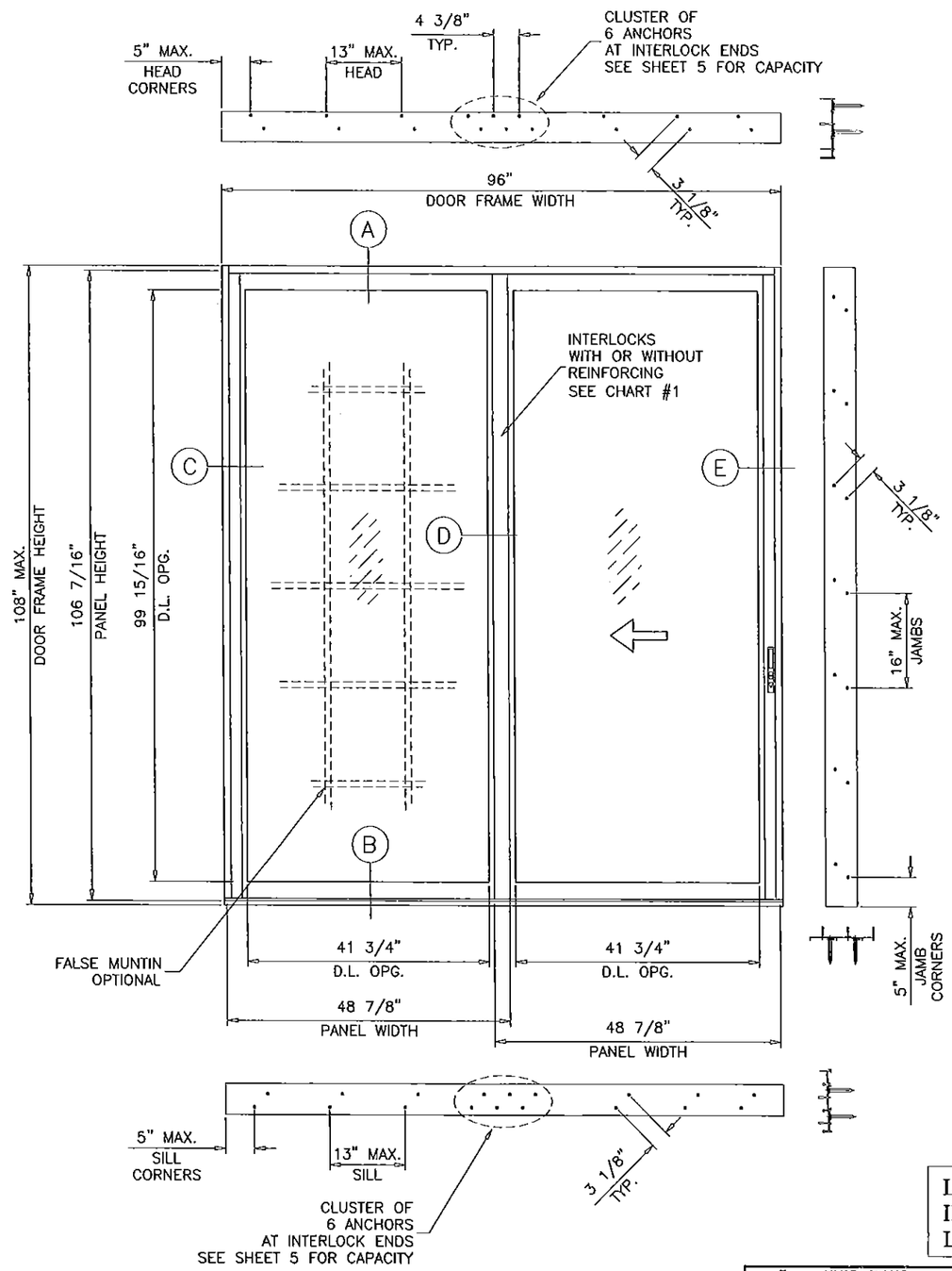

TYPICAL ELEVATION

OX

ALTERNATE SIZE UNITS:
MAX. FRAME AREA OF DOORS NOT TO EXCEED THE TESTED FRAME AREA OF 72 SQ. FT.

PRODUCT REVISED
no complying with the Florida Building Code
Acceptance No. 15-0612.05
Expiration Date MAR 20, 2019
Product Control

LAMINATED GLASS
INSUL. LAM. GLASS
LARGE MISSILE IMPACT

Engr: JAVAD AHMAD
CIVIL
FLA. PE # 70592
C.A.N. 3538
DEC 02 2015

AL-FAROOQ CORPORATION
ENGINEERS & PRODUCT DEVELOPMENT
9360 SUNSET DRIVE, SUITE 220
MIAMI, FLORIDA 33173
TEL. (305) 264-8100 FAX. (305) 262-6978
COMP–ANL\W13–49ECO

SERIES–700 ALUM SLIDING GLASS DOOR (L.M.I.)

ECO WINDOW SYSTEMS, LLC.
9114 N.W. 106 STREET
MEDLEY, FL. 33178
TEL (305) 885–5299 FAX (305) 885–5902

revisions:

no	date	by	description
A	01.16.14		REV. PER RER COMMENTS
B	06.08.15		UPDATED TO 2014 FBC
C	12.01.15		REV. PER RER COMMENTS

date: 09–27–13
scale: 1/2"=1'–0"
dr. by: HAMID
chk. by:

drawing no.
W13–49

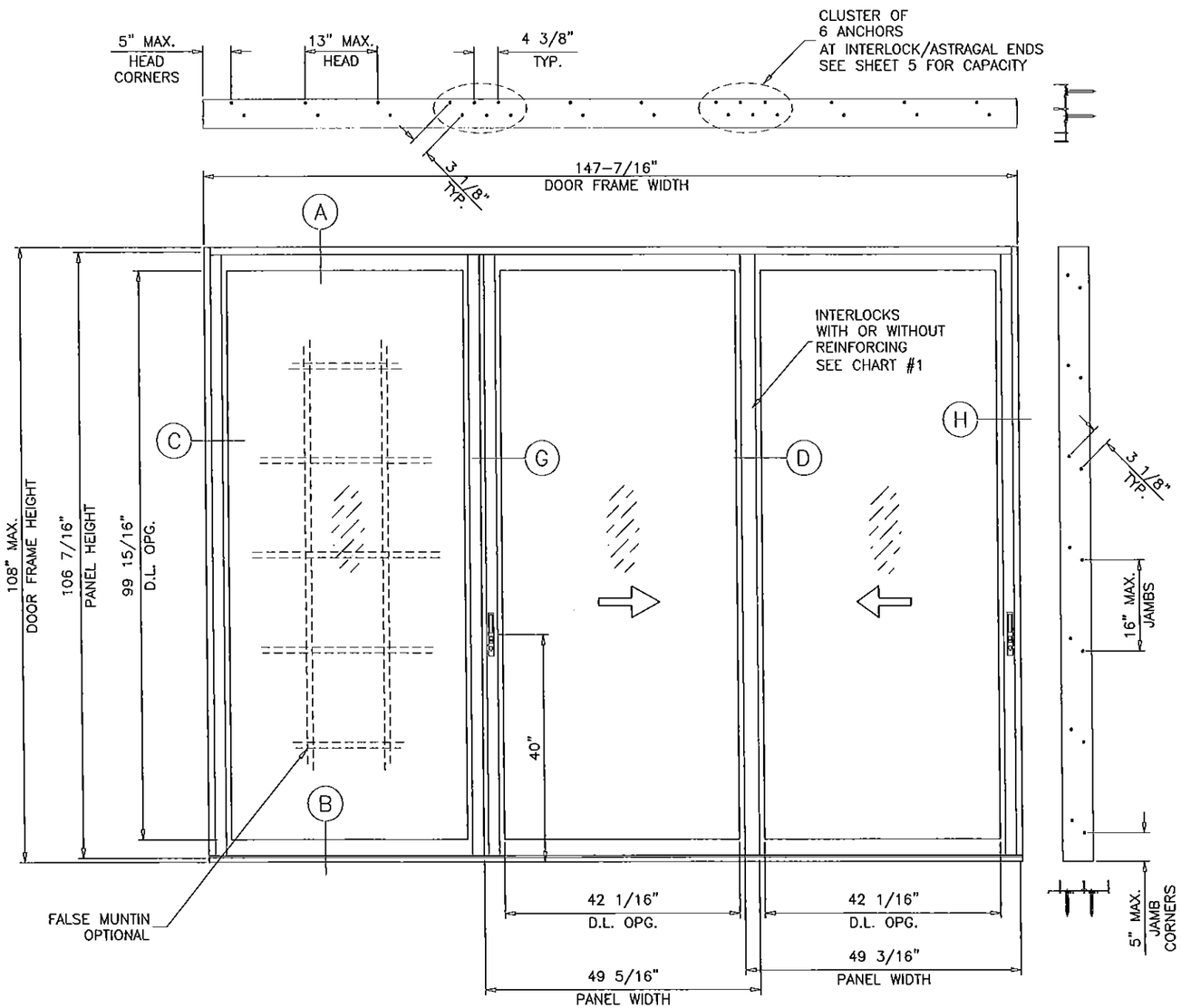

TYPICAL ELEVATION

OXX

ALTERNATE SIZE UNITS:
MAX. FRAME AREA OF DOORS NOT TO EXCEED
THE TESTED FRAME AREA OF 110.7 SQ. FT.

PRODUCT REVISED
to complying with the Florida
Building Code
Acceptance No 15-0612.05
Expiration Date 3/2019
By [illegible]
Miami-Dade Product Control

Engr: JAVAD AHMAD
CIVIL
FLA. PE # 70592
C.A.N. 3538
DEC 02 2015

AL-FAROOQ CORPORATION
ENGINEERS & PRODUCT DEVELOPMENT
9360 SUNSET DRIVE, SUITE 220
MIAMI, FLORIDA 33173
TEL. (305) 264-8100 FAX. (305) 262-6978

COMP-ANL\W13-49ECO

SERIES-700 ALUM SLIDING GLASS DOOR (L.M.I.)

ECO WINDOW SYSTEMS, LLC.
9114 N.W. 106 STREET
MEDLEY, FL. 33178
TEL. (305) 885-5299 FAX (305) 885-5902

revisions:

no	date	by	description
A	01.16.14		REV. PER RER COMMENTS
B	06.08.15		UPDATED TO 2014 FBC
C	12.01.15		REV. PER RER COMMENTS

date: 09-27-13
scale: 1/2"=1'-0"
dr. by: HAMID
chk. by:

drowing no.
W13-49

sheet 2 of 12

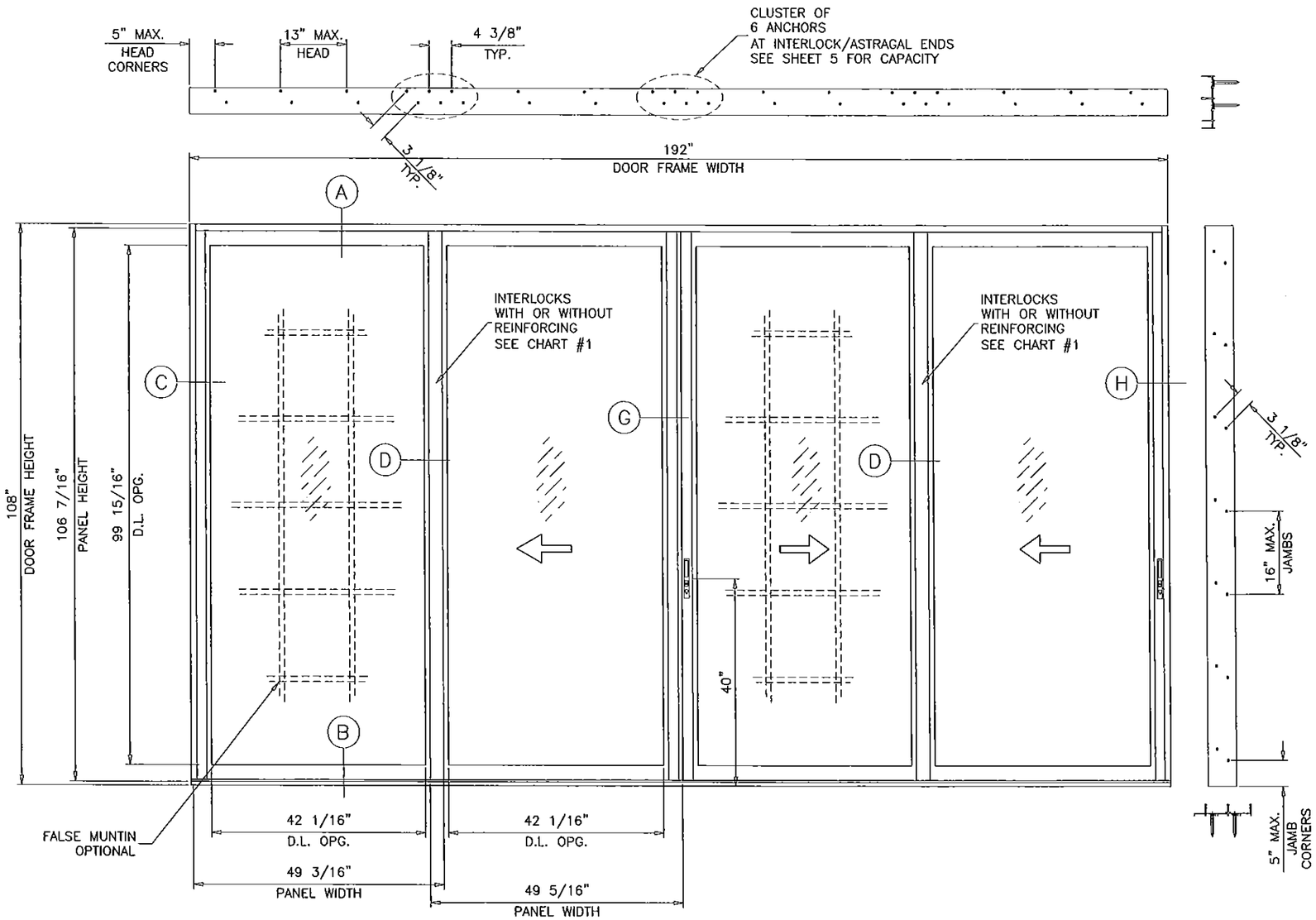

TYPICAL ELEVATION

OXXX

ALTERNATE SIZE UNITS:
MAX. FRAME AREA OF DOORS NOT TO EXCEED
THE TESTED FRAME AREA OF 144 SQ. FT.

PRODUCT REVISED
no complying with the Florida
Building Code
Acceptance No. 15-0612.05
Expiration Date 3/20/19
By Ishac Elkhouri
Miami Dade Product Control

Engr: JAVAD AHMAD
CIVIL
FLA. PE # 70592
C.A.N. 3538
DEC 02 2015

AL-FAROOQ CORPORATION
ENGINEERS & PRODUCT DEVELOPMENT
9360 SUNSET DRIVE, SUITE 220
MIAMI, FLORIDA 33173
TEL. (305) 264-8100 FAX. (305) 262-6978
COMP-ANL\W13-49ECO

SERIES-700 ALUM SLIDING GLASS DOOR (L.M.I.)

ECO WINDOW SYSTEMS, LLC.
9114 N.W. 106 STREET
MEDLEY, FL. 33178
TEL. (305) 885-5299 FAX (305) 885-5902

revisions:

no	date	by	description
A	01.16.14		REV. PER RER COMMENTS
B	05.08.15		UPDATED TO 2014 FBC
C	12.01.15		REV. PER RER COMMENTS

date: 09-27-13
scale: 1/2"=1'-0"
dr. by: HAMID
chk. by:

drawing no.
W13-49

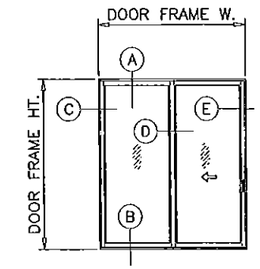

OX (SHOWN)
XO
XX

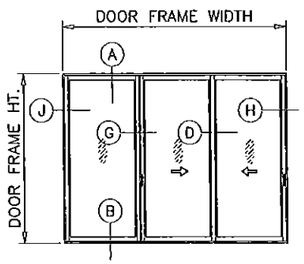

OXX (SHOWN)
XXO

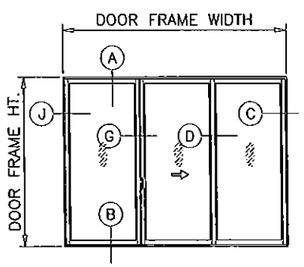

OXO (SHOWN)

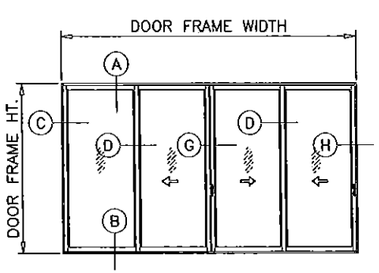

OXXX (SHOWN)
OXXO
XXXX

APPROVED CONFIGURATIONS

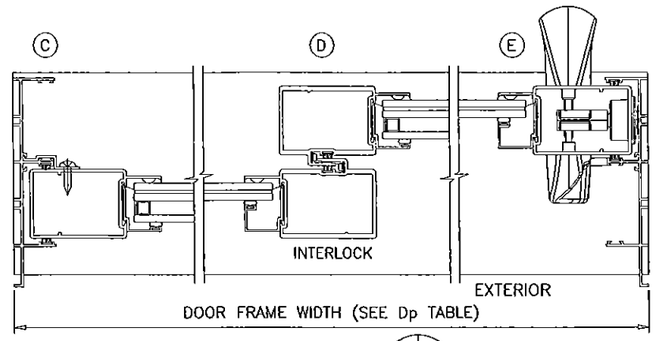

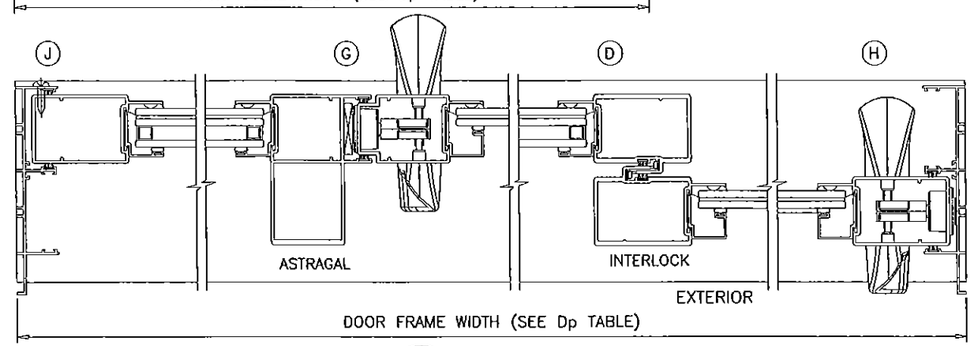

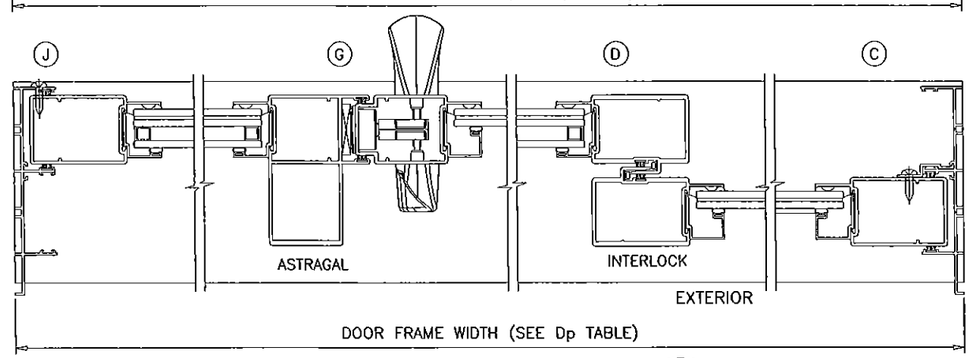

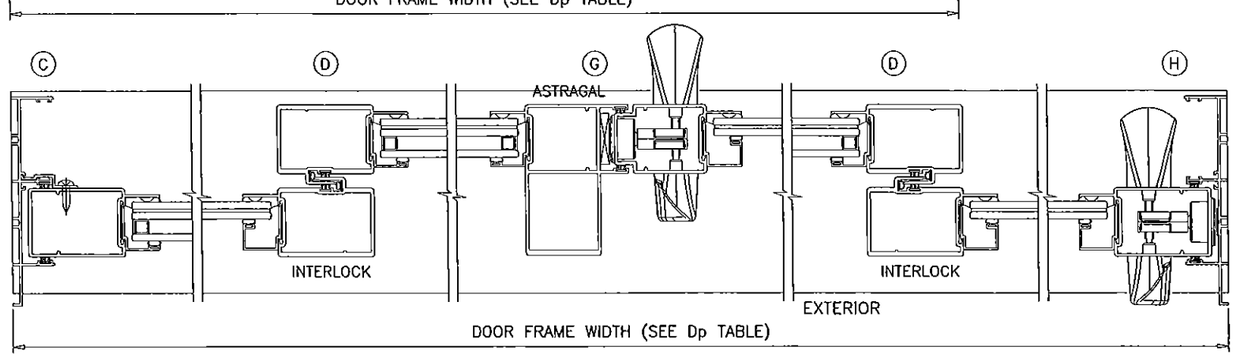

NOTE:

1. CONFIGURATIONS SHOWN FOR ILLUSTRATION PURPOSES ONLY.
2. FOR APPLICABLE DESIGN PRESSURES AND REINFORCEMENTS REQUIREMENTS SEE SHEET 5.
3. FOR ANCHOR DETAILS SEE SHEETS 7 THRU 9.

PRODUCT REVISED
as complying with the Florida
Building Code
Acceptance No. 15-0612.05
Expiration Date 3/26/19
Miami-Dade Product Control

Engr: JAVAD AHMAD
CIVIL
FLA. PE # 70592
C.A.N. 3538
DEC 02 2015

AL-FAROOQ CORPORATION
ENGINEERS & PRODUCT DEVELOPMENT
9360 SUNSET DRIVE, SUITE 220
MIAMI, FLORIDA 33173
TEL. (305) 264-8100 FAX. (305) 262-6978
COMP-ANL\W13-49ECO

SERIES-700 ALUM SLIDING GLASS DOOR (L.M.I.)

ECO WINDOW SYSTEMS, LLC.
9114 N.W. 106 STREET
MEDLEY, FL. 33178
TEL. (305) 885-5299 FAX (305) 885-5902

revisions:

no	date	by	description
A	01.16.14		REV. PER RER COMMENTS
B	06.08.15		UPDATED TO 2014 FBC
C	12.01.15		REV. PER RER COMMENTS

date: 09-27-13
scale: 1/2"=1'-0"
dr. by: HAMID
chk. by:

drawing no.
W13-49

CHART #1

DESIGN LOAD CAPACITY – PSF (GLASS)					
AVERAGE PANEL WIDTH INCHES	DOOR FRAME HEIGHT INCHES	GLASS TYPES 'B', 'B1' WITHOUT REINF.		GLASS TYPES 'A', 'A1' WITH REINF.	
		EXT.(+)	INT.(–)	EXT.(+)	INT.(–)
30	82	70.0	80.0	70.0	80.0
36		70.0	80.0	70.0	80.0
42		70.0	80.0	70.0	80.0
48		70.0	80.0	70.0	80.0
54		62.2	71.1	62.2	71.1
30	84	70.0	80.0	70.0	80.0
36		70.0	80.0	70.0	80.0
42		70.0	80.0	70.0	80.0
48		70.0	80.0	70.0	80.0
54		62.2	71.1	62.2	71.0
30	90	70.0	80.0	70.0	80.0
36		70.0	80.0	70.0	80.0
42		70.0	80.0	70.0	80.0
48		70.0	80.0	70.0	80.0
54		–	–	62.2	71.1
30	96	70.0	80.0	70.0	80.0
36		70.0	80.0	70.0	80.0
42		70.0	80.0	70.0	80.0
48		70.0	80.0	70.0	80.0
54		–	–	62.2	71.1
30	98	70.0	80.0	70.0	80.0
36		70.0	80.0	70.0	80.0
42		70.0	80.0	70.0	80.0
48		70.0	80.0	70.0	80.0
30	102	–	–	70.0	80.0
36		–	–	70.0	80.0
42		–	–	70.0	80.0
48		–	–	70.0	80.0
30	108	–	–	70.0	80.0
36		–	–	70.0	80.0
42		–	–	70.0	80.0
48		–	–	70.0	80.0

CHART #2

LOAD CAPACITY – PSF (ANCHORS)			
AVERAGE PANEL WIDTH INCHES	DOOR FRAME HEIGHT INCHES	6 ANCHORS AT MTG. STILE ENDS	
		EXT.(+)	INT.(–)
30	82	70.0	80.0
36		70.0	80.0
42		70.0	80.0
48		70.0	80.0
54		62.2	71.1
30	84	70.0	80.0
36		70.0	80.0
42		70.0	80.0
48		70.0	80.0
54		62.2	71.1
30	90	70.0	80.0
36		70.0	80.0
42		70.0	80.0
48		70.0	80.0
54		62.2	71.1
30	96	70.0	80.0
36		70.0	80.0
42		70.0	80.0
48		70.0	80.0
54		62.2	71.1
30	98	70.0	80.0
36		70.0	80.0
42		70.0	80.0
48		70.0	80.0
30	102	70.0	80.0
36		70.0	80.0
42		70.0	80.0
48		70.0	80.0
30	108	70.0	80.0
36		70.0	80.0
42		70.0	80.0
48		70.0	77.9

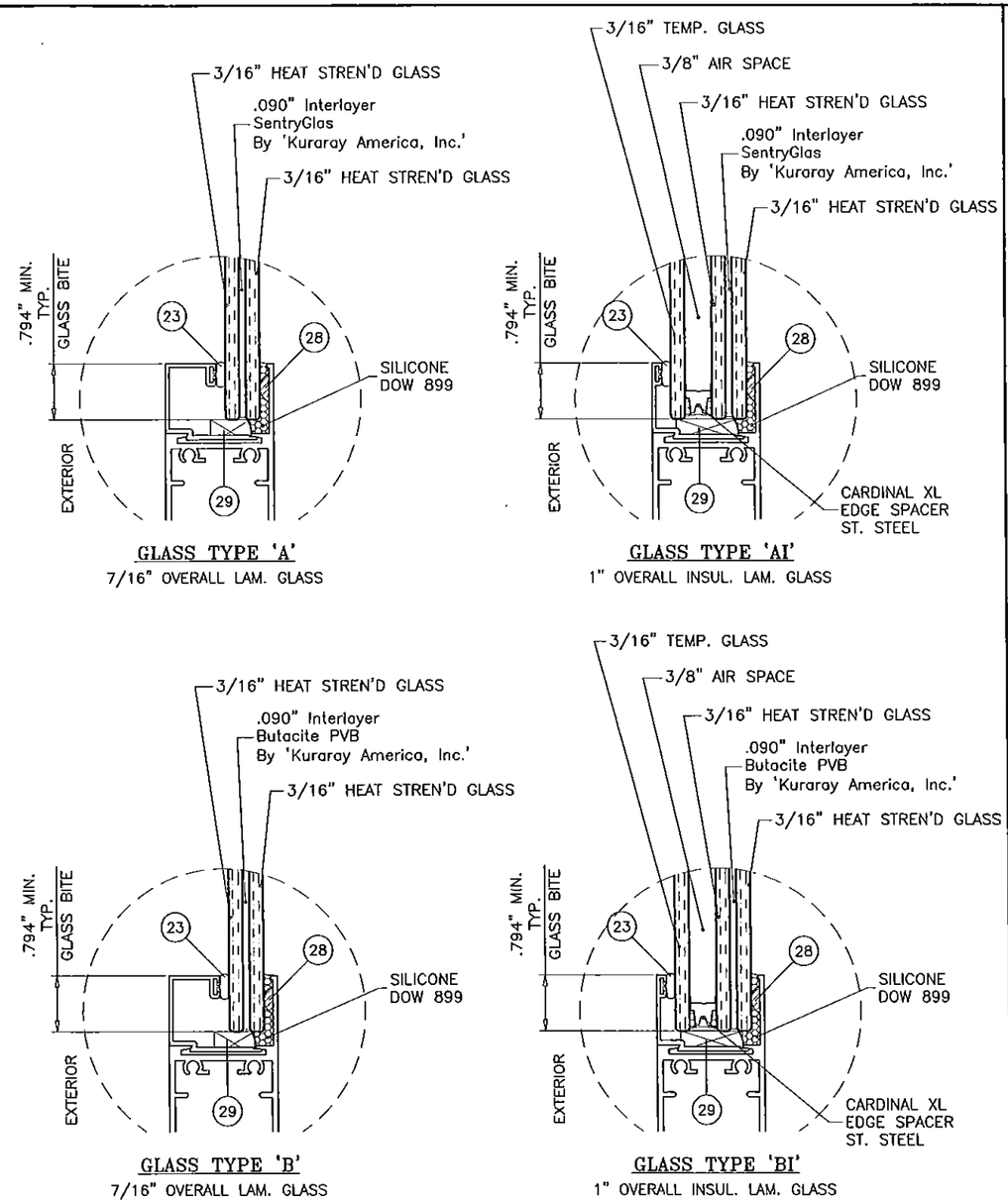

GLAZING OPTIONS

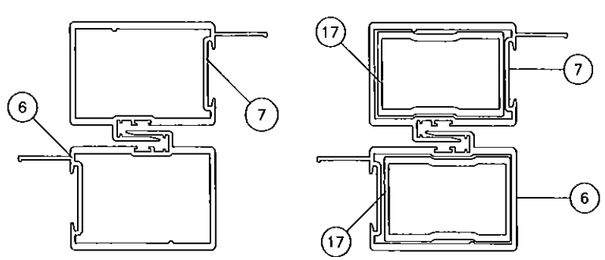

INTERLOCKS WITHOUT REINF. INTERLOCKS WITH REINF.

ALL EXTERIOR(+) LOADS SHOWN IN CHARTS ABOVE ARE FOR DOORS WITH 2-3/4" SILL HEIGHTS.
FOR 2" SILL HEIGHT LIMIT EXT.(+) LOADS TO 47.0 PSF
DOORS WITH 1-1/8" SILL HEIGHTS ARE NOT APPROVED FOR WATER INFILTRATION RESISTANCE
SEE SHEET 7 FOR DETAILS

NOTE:
SEE CHART #1 FOR DESIGN LOAD CAPACITY OF DESIRED GLASS SIZE AND REINFORCEMENT.
SEE CHART #2 FOR ANCHORS CAPACITY.
LOWER VALUES FROM GLASS OR ANCHOR CHART WILL APPLY TO ENTIRE SYSTEM.

NOTE:
GLASS CAPACITIES ON THIS SHEET ARE BASED ON ASTM E1300-09 (3 SEC. GUSTS) AND FLORIDA BUILDING COMMISSION DECLARATORY STATEMENT DCA05-DEC-219

Engr: JAVAD AHMAD
CIVIL
FLA. PE # 70592
C.A.N. 3538
DEC 02 2015

PRODUCT REVISED
no complying with the Florida Building Code
Acceptance No. 15-0612.05
Expiration Date 3/20/19
Product Control

AL-FAROOQ CORPORATION
ENGINEERS & PRODUCT DEVELOPMENT
9360 SUNSET DRIVE, SUITE 220
MIAMI, FLORIDA 33173
TEL. (305) 264-8100 FAX. (305) 262-6978
COMP-ANL\W13-49ECO

SERIES-700 ALUM SLIDING GLASS DOOR (L.M.I.)

ECO WINDOW SYSTEMS, LLC.
9114 N.W. 106 STREET
MEDLEY, FL. 33178
TEL. (305) 885-5299 FAX (305) 885-5902

revisions:			
no	date	by	description
A	01.16.14		REV. PER RER COMMENTS
B	06.08.15		UPDATED TO 2014 FBC
C	12.01.15		REV. PER RER COMMENTS

date: 09-27-13
scale: 1/2" = 1"
dr. by: HAMID
chk. by:

drawing no.
W13-49

1BY OR 2BY WOOD BUCKS AND METAL STRUCTURE NOT BY ECO WINDOWS
MUST SUSTAIN LOADS IMPOSED BY GLAZING SYSTEM
AND TRANSFER THEM TO THE BUILDING STRUCTURE.

TYPICAL ANCHORS: SEE ELEV. FOR SPACING

— AT HEAD —

TYPE 'A'– 1/4" DIA. ULTRACON BY 'ELCO' (Fu=177 KSI, Fy=155 KSI)
THRU 1BY OR 2BY BUCKS INTO CONCRETE
1–1/4" MIN. EMBED INTO CONCRETE

TYPE 'B'– 1/4" DIA. ULTRACON BY 'ELCO' (Fu=177 KSI, Fy=155 KSI)
DIRECTLY INTO CONCRETE
1–3/4" MIN. EMBED

TYPE 'C'– 1/4" DIA. SELF DRILLING SCREWS (GRADE 5 CRS)
INTO MIAMI–DADE COUNTY APPROVED MULLIONS (1/8" THK. MIN.)
INTO METAL STRUCTURES
STEEL : 1/8" THK. MIN. (Fy = 36 KSI MIN.)
ALUMINUM : 1/8" THK. MIN. (6063–T5 MIN.)
(STEEL IN CONTACT WITH ALUMINUM TO BE PLATED OR PAINTED)

— AT SILL —

TYPE 'B'– 1/4" DIA. ULTRACON BY 'ELCO' (Fu=177 KSI, Fy=155 KSI)
DIRECTLY INTO CONCRETE
1–3/4" MIN. EMBED

— AT JAMBS —

TYPE 'A'– 1/4" DIA. ULTRACON BY 'ELCO' (Fu=177 KSI, Fy=155 KSI)
INTO 2BY WOOD BUCKS OR WOOD STRUCTURES
1–1/2" MIN. PENETRATION INTO WOOD

THRU 1BY BUCKS INTO CONC. OR MASONRY
1–1/4" MIN. EMBED INTO CONC. OR MASONRY

TYPE 'B'– 1/4" DIA. ULTRACON BY 'ELCO' (Fu=177 KSI, Fy=155 KSI)
DIRECTLY INTO CONC. OR MASONRY
1–1/4" MIN. EMBED INTO CONC. OR MASONRY

TYPE 'C'– 1/4" DIA. SELF DRILLING SCREWS (GRADE 5 CRS)
INTO MIAMI–DADE COUNTY APPROVED MULLIONS (1/8" THK. MIN.)
INTO METAL STRUCTURES
STEEL : 1/8" THK. MIN. (Fy = 36 KSI MIN.)
ALUMINUM : 1/8" THK. MIN. (6063–T5 MIN.)
(STEEL IN CONTACT WITH ALUMINUM TO BE PLATED OR PAINTED)

ANCHOR EDGE DISTANCES
INTO CONCRETE = 2–1/2" MIN.
INTO WOOD STRUCTURE = 1" MIN.
INTO METAL STRUCTURE = 3/4" MIN.

CONCRETE AT HEAD, SILL OR JAMBS f'c = 3000 PSI MIN.
C–90 HOLLOW/FILLED BLOCK AT JAMBS f'm = 2000 PSI MIN.

PRODUCT REVISED
as complying with the Florida Building Code
Acceptance No. 15-0612.05
Expiration Date 3/20/19
Miami-Dade Product Control

Engr: JAVAD AHMAD
CIVIL
FLA. PE # 70592
C.A.N. 3538
DEC 0 2 2015

AL-FAROOQ CORPORATION
ENGINEERS & PRODUCT DEVELOPMENT
9360 SUNSET DRIVE, SUITE 220
MIAMI, FLORIDA 33173
TEL. (305) 264-8100 FAX. (305) 262-6978

COMP–ANL\W13–49ECO

SERIES–700 ALUM SLIDING GLASS DOOR (L.M.I.)

ECO WINDOW SYSTEMS, LLC.
9114 N.W. 106 STREET
MEDLEY, FL. 33178
TEL. (305) 885–5299 FAX (305) 885–5902

revisions:

no	date	by	description
A	01.16.14		REV. PER RER COMMENTS
B	06.08.15		UPDATED TO 2014 FBC
C	12.01.15		REV. PER RER COMMENTS

date: 09–27–13
scale: 1/2" = 1"
dr. by: HAMID
chk. by:

drawing no.
W13–49

sheet 6 of 12

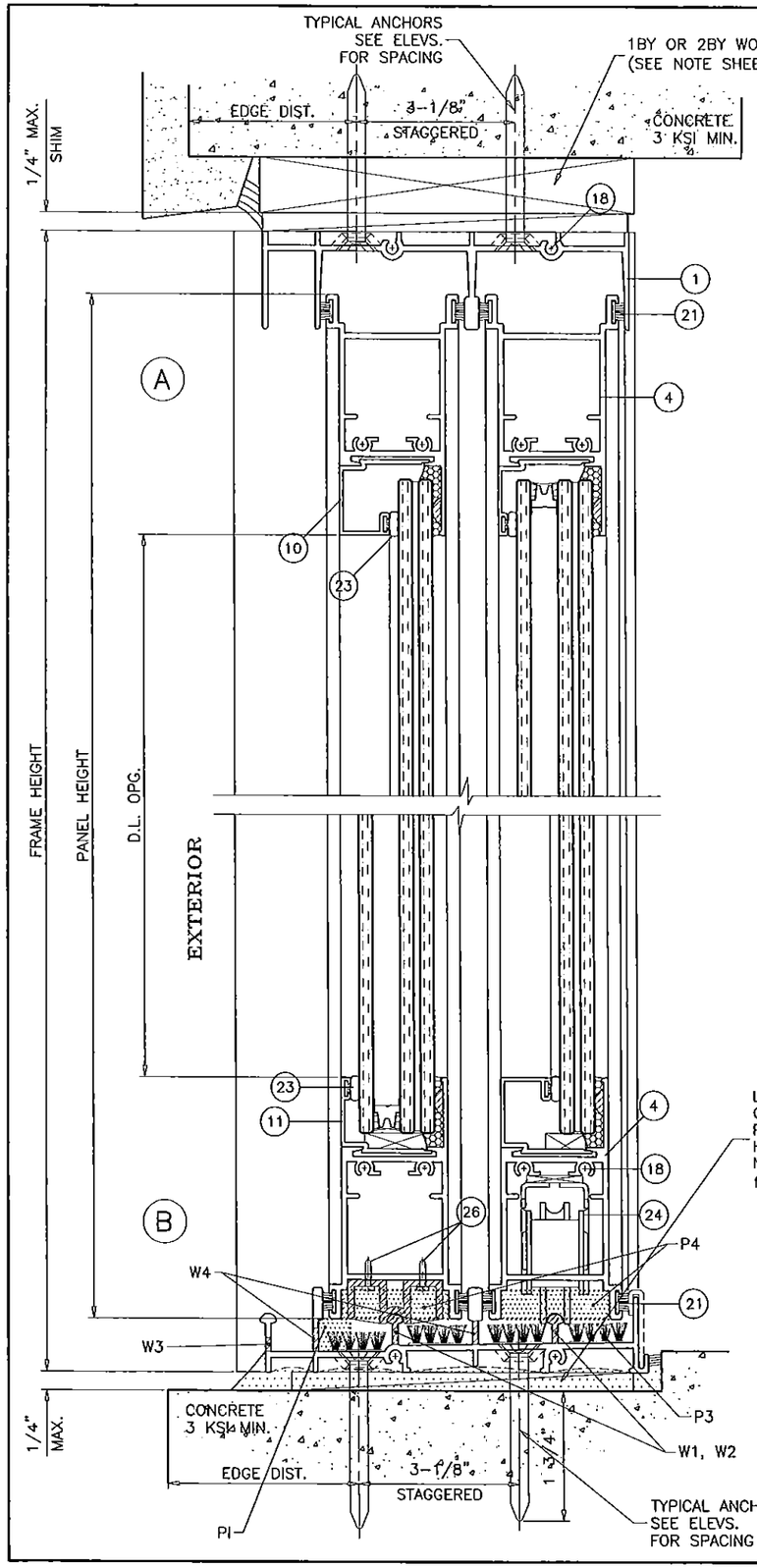

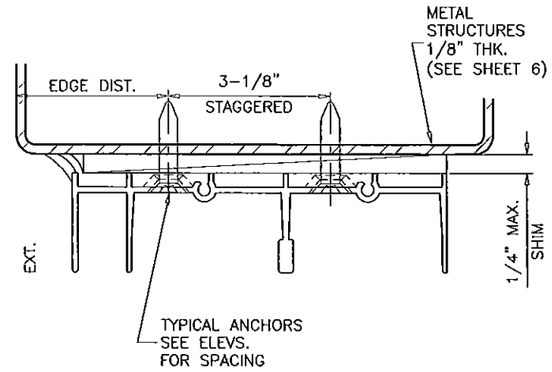

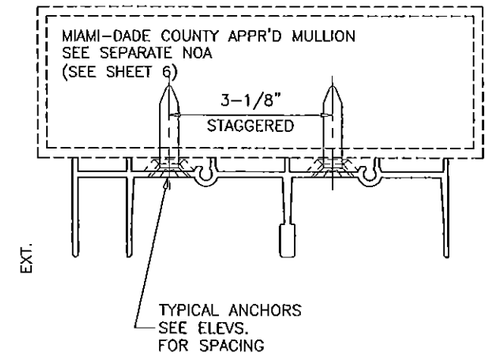

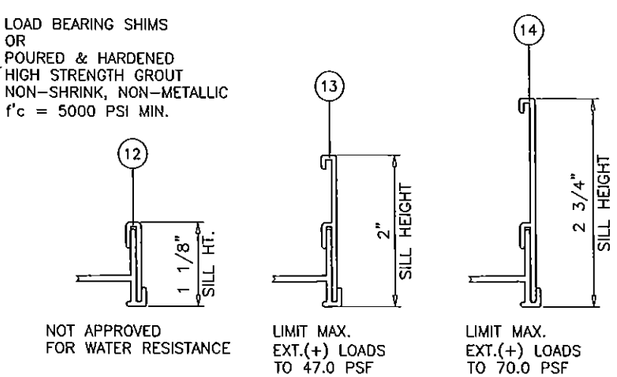

SILL HEIGHT VS WATER RESISTANCE EXT.(+) LOAD

SEE SHEET 5 CHART 1 FOR DOOR CAPACITY

PRODUCT REVISED
as complying with the Florida Building Code
Acceptance No. 15-0612.05
Expiration Date 3/20/19
Miami-Dade Product Control

WEEPHOLES:

W1 = 1-1/2" LONG NOTCH AT EACH END.

W2 = 3/16" X 3/4" LONG WEEP NOTCH AT 22" FROM ENDS AND 36" O.C.

W3 = 3/16" X 1" LONG WEEP NOTCH AT 5" FROM ENDS AND 36" O.C.

W4 = 1/4" X 1" LONG WEEP NOTCH AT 5" FROM ENDS AND 36" O.C.

PILE PADS:

P1 = OPEN CELL FOAM AT EACH WEEP HOLE LOCATION 1-1/16" LONG X 7/16" WIDE X 7/16" HIGH

P2 = SELF ADHESIVE PILE PAD 1" X 3/8" X 1/4" HIGH

P3 = SELF ADHESIVE PILE PAD WITH MULTI INTEGRAL FIN 2-1/2" X 1" X 3/8" HIGH

P4 = OPEN CELL FOAM AT INTERLOCK & ASTRAGAL 2" LONG X 1-7/16" WIDE X 7/16" HIGH

Engr: JAVAD AHMAD
CIVIL
FLA. PE # 70592
C.A.N. 3538
DEC 02 2015

AL-FAROOQ CORPORATION
ENGINEERS & PRODUCT DEVELOPMENT
9360 SUNSET DRIVE, SUITE 220
MIAMI, FLORIDA 33173
TEL. (305) 264-8100 FAX. (305) 262-6978
COMP-ANL\W13-49ECO

SERIES-700 ALUM SLIDING GLASS DOOR (L.M.I.)

ECO WINDOW SYSTEMS, LLC.
9114 N.W. 106 STREET
MEDLEY, FL. 33178
TEL (305) 885-5902 FAX (305) 885-5299

revisions:

no	date	by	description
A	01.16.14		REV. PER RER COMMENTS
B	06.08.15		UPDATED TO 2014 FBC
C	12.01.15		REV. PER RER COMMENTS

date: 09-27-13
scale: 1/2" = 1"
dr. by: HAMID
chk. by:

drawing no.
W13-49

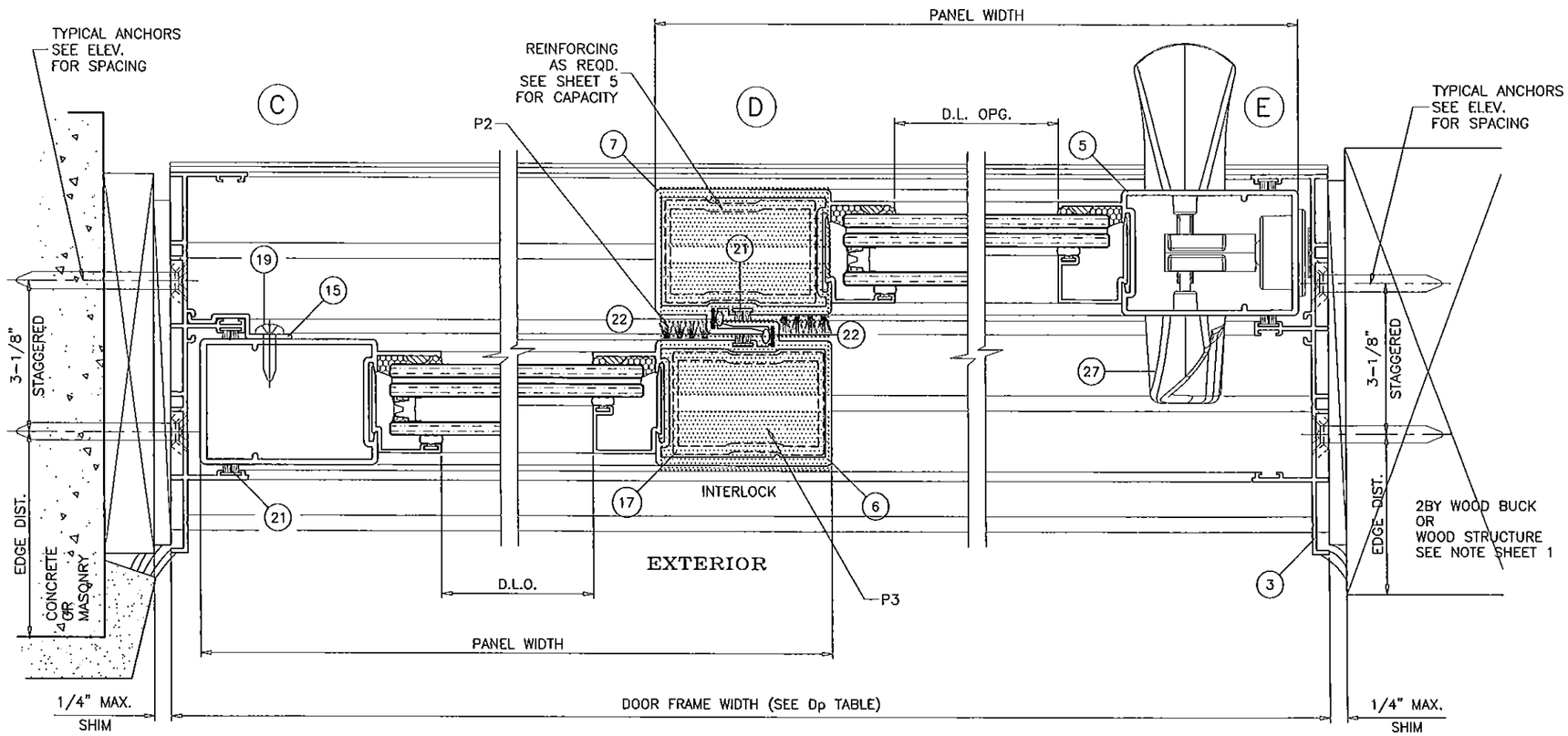

PRODUCT REVISED
to comply with Florida
Building Code
Acceptance No. 15-0612.05
Expiration Date 3/20/19
Product Control

Engr: JAVAD AHMAD
CIVIL
FLA. RE # 70592
C.A.# 3538
DEC 0 3 2015

AL-FAROOQ CORPORATION
ENGINEERS & PRODUCT DEVELOPMENT
9360 SUNSET DRIVE, SUITE 220
MIAMI, FLORIDA 33173
TEL. (305) 264-8100 FAX. (305) 262-6978

COMP-ANL\W13-49ECO

SERIES-700 ALUM SLIDING GLASS DOOR (L.M.I.)

ECO WINDOW SYSTEMS, LLC.
9114 N.W. 106 STREET
MEDLEY, FL. 33178
TEL. (305) 885-5299 FAX (305) 885-5902

revisions:

no	date	by	description
A	01.16.14		REV. PER RER COMMENTS
B	06.08.15		UPDATED TO 2014 FBC
C	12.01.15		REV. PER RER COMMENTS

date: 09-27-13
scale: 1/2" = 1"
dr. by: HAMID
chk. by:

drawing no.
W13-49

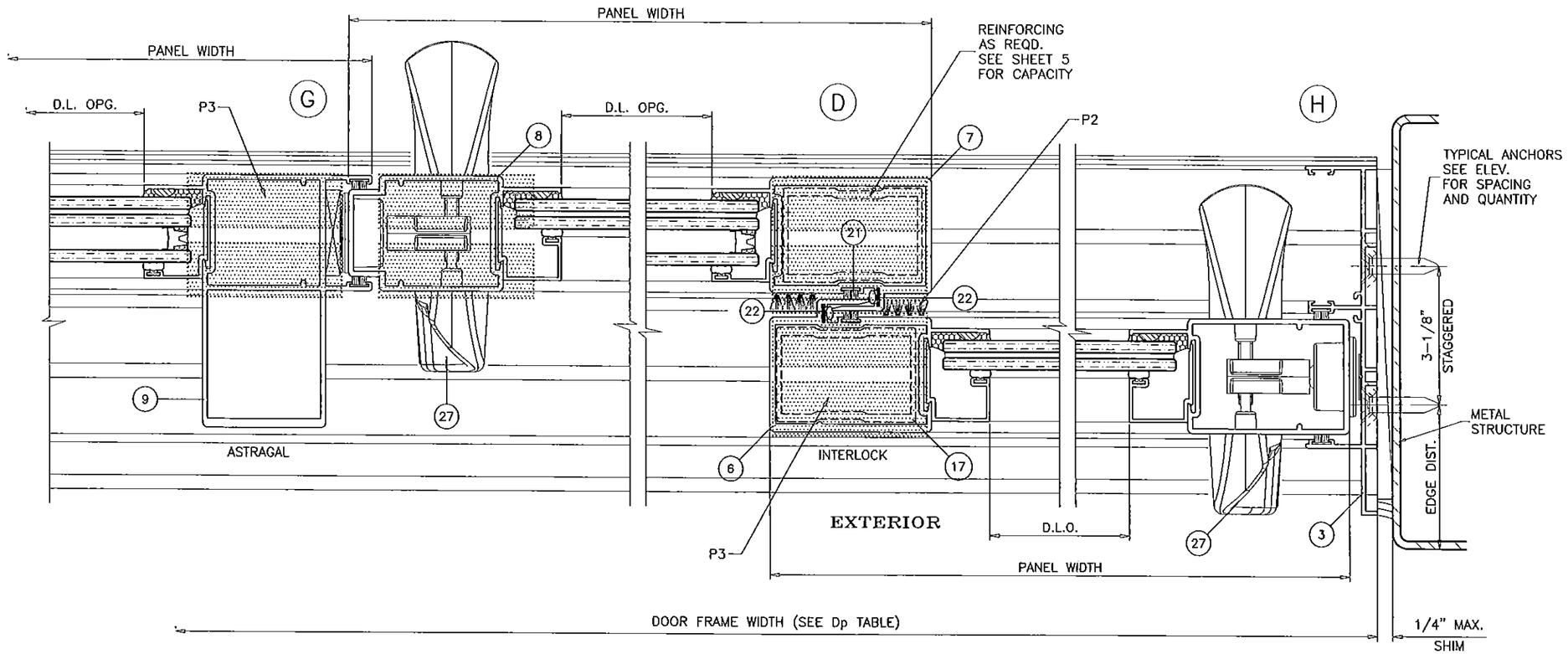

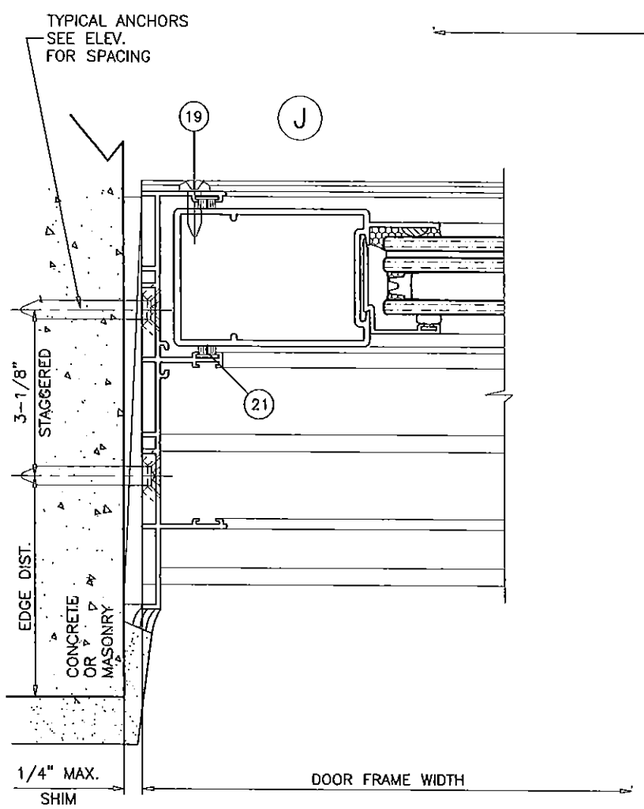

PRODUCT REVISED
as complying with the Florida Building Code
Acceptance No. 15-0612.05
Expiration Date 3/20/19
Product Control

Engr: JAVAD AHMAD
CIVIL
FLA. PE # 70592
C.A. # 3538
DEC 02 2015

AL-FAROOQ CORPORATION
ENGINEERS & PRODUCT DEVELOPMENT
9360 SUNSET DRIVE, SUITE 220
MIAMI, FLORIDA 33173
TEL. (305) 264-8100 FAX. (305) 262-6978
COMP-ANL\W13-49ECO

SERIES-700 ALUM SLIDING GLASS DOOR (L.M.I.)

ECO WINDOW SYSTEMS, LLC.
9114 N.W. 106 STREET
MEDLEY, FL. 33178
TEL. (305) 885-5299 FAX (305) 885-5902

revisions:

no	date	by	description
A	01.16.14		REV. PER RER COMMENTS
B	06.08.15		UPDATED TO 2014 FBC
C	12.01.15		REV. PER RER COMMENTS

date: 09-27-13
scale: 1/2" = 1"
dr. by: HAMID
chk. by:

drawing no.
W13-49

sheet 9 of 12

ITEM #	PART #	QUANTITY	DESCRIPTION	MATERIAL	MANF./SUPPLIER/REMARKS
1	E701	1	FRAME HEAD	6005-T5	–
2	E702	1	FRAME SILL	6005-T5	–
3	E703	2	FRAME JAMB	6063-T6	–
4	E704	2/ PANEL	PANEL TOP AND BOTTOM RAIL	6063-T6	–
5	E705	AS RQD.	PANEL LOCK STILE	6063-T6	–
6	E706	AS REQD.	PANEL OUTER INTERLOCK	6063-T6	–
7	E707	AS REQD.	PANEL INNER INTERLOCK	6063-T6	–
8	E708	AS REQD.	PANEL MALE ASTRAGAL	6063-T6	–
9	E709	AS REQD.	PANEL FEMALE ASTRAGAL	6063-T6	–
10	E710	AS REQD.	GLAZING BEAD 7/16" LAMINATED GLASS	6063-T6	–
11	E711	AS REQD.	GLAZING BEAD 1" INSULATED GLASS	6063-T6	–
12	E712	AS REQD.	SILL TRIM	6063-T6	OPTIONAL
13	E713	AS REQD.	2" SILL RISER	6063-T6	–
14	E714	AS REQD.	2-3/4" SILL RISER	6063-T6	–
15	E715	AS REQD.	FIXED PANEL CLIP (CONTINUOUS)	6063-T6	–
17	E717	AS REQD.	INTERLOCK STIFFENER (FULL PANEL LENGTH)	6063-T6	–
18	#10 X 3/4" HWH SMS	AS REQD.	FRAME ASSY. SCREWS	ST. STEEL	–
18A	#10 X 1" FH SMS	AS REQD.	PANEL ASSY. SCREWS	ST. STEEL	–
19	#8 X 1/2" PH SMS	2/CLIP	FIXED PANEL CLIP SCREWS	ST. STEEL	AT 3" FROM ENDS & 16" O.C.
20	#10 X 1-1/4" PH SMS	1/ ROLLER	ROLLER INST. SCREWS	–	NOT SHOWN
21	WEATHERSTRIP	AS REQD.	FRAME AND PANEL WEATHERSTRIP	–	FIN SEAL .190 HIGH BY ULTRAFAB
22	E235	AS REQD.	INTERLOCK BUMPER BULB	SANTOPRENE	ULTRAFAB
23	E203	AS REQD.	GLAZING BEAD BULB	SANTOPRENE	ULTRAFAB, DUROMETER 65±5
24	PR03-6005	2/ MOV. PANEL	TANDEM NYLON WHEELS IN ST. STEEL HOUSING	–	INTERLOCK (1/2" MTG. SPACER REQD.)
25	E718	2/PANEL	FIXED PANEL SKATE	DELRIN	–
26	#8 X 1/2" PH SMS	2/CLIP	FIXED PANEL SKATE INST. SCREWS	ST. STEEL	
27	–	AS REQD.	3 PLY DUAL POINT LOCK ASSEMBLY	–	BY INTERLOCK
28		AS REQD.	BUMPON (SILICONE SPACER)	SILICONE	BY FRANK LOWE
29		AS REQD.	SETTING BLOCKS AT 1/4 POINTS	EPDM	DUROMETER 80±5 SHORE A

SEALANT:

ALL JOINTS AND FRAME CONNECTIONS SEALED WITH WHITE/ALUMINUM COLORED SILICONE.

PRODUCT REVISED
as complying with the Florida Building Code
Acceptance No. 15-0612.05
Expiration Date 3/20/19
[illegible] **Product Control**

Engr: JAVAD AHMAD
CIVIL
FLA. PE # 70592
C.A.N. 3538
DEC 02 2015

AL-FAROOQ CORPORATION
ENGINEERS & PRODUCT DEVELOPMENT
9360 SUNSET DRIVE, SUITE 220
MIAMI, FLORIDA 33173
TEL. (305) 264-8100 FAX. (305) 262-6978
COMP-ANL\W13-49ECO

SERIES-700 ALUM SLIDING GLASS DOOR (L.M.I.)

ECO WINDOW SYSTEMS, LLC.
9114 N.W. 106 STREET
MEDLEY, FL. 33178
TEL. (305) 885-5299 FAX (305) 885-5902

revisions:

no	date	by	description
A	01.16.14		REV. PER RER COMMENTS
B	06.08.15		UPDATED TO 2014 FBC
C	12.01.15		REV. PER RER COMMENTS

date: 09-27-13
scale: 1/2" = 1"
dr. by: HAMID
chk. by:

drawing no.
W13-49

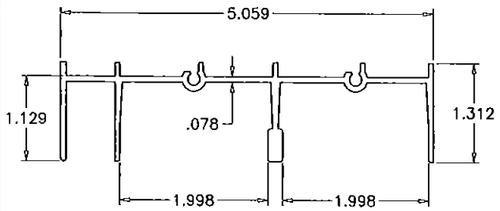

1 FRAME HEAD

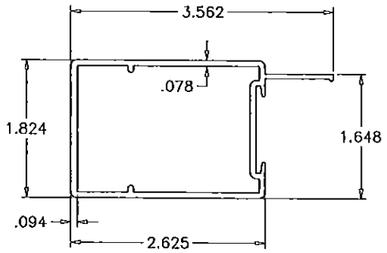

5 PANEL LOCK STILE

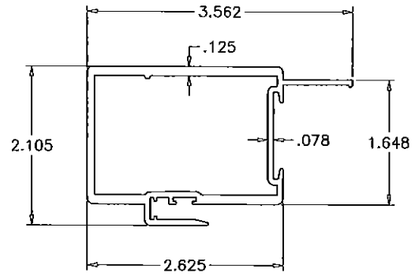

7 PANEL INNER INTERLOCK

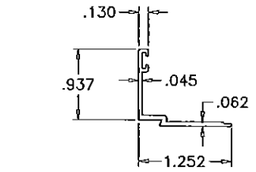

10 GLAZING BEAD
1" INSUL. LAM. GLASS

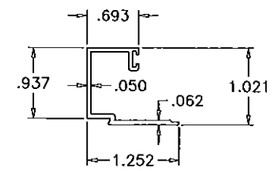

11 GLAZING BEAD
7/16" LAM. GLASS

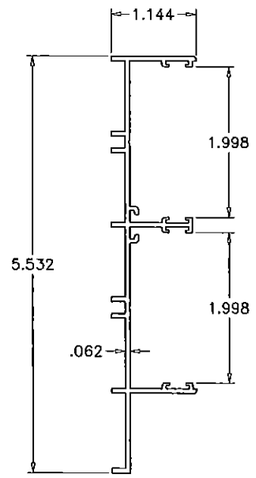

3 FRAME JAMB

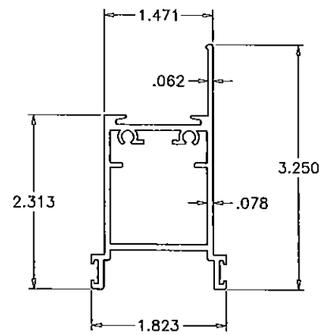

4 PANEL TOP & BOTTOM RAIL

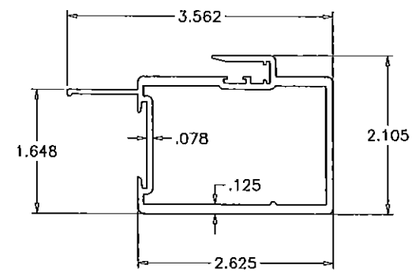

6 PANEL OUTER INTERLOCK

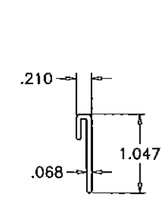

12 SILL TRIM

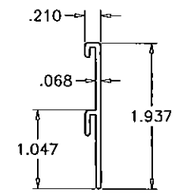

13 2" SILL RISER

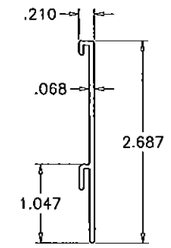

14 2-3/4" SILL RISER

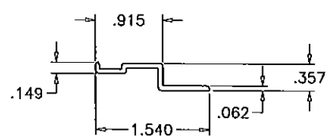

15 FIX. PANEL CLIP

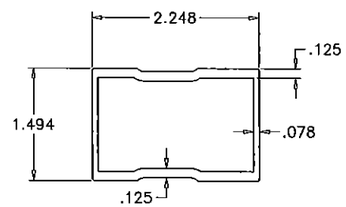

17 INTERLOCK STIFFENER

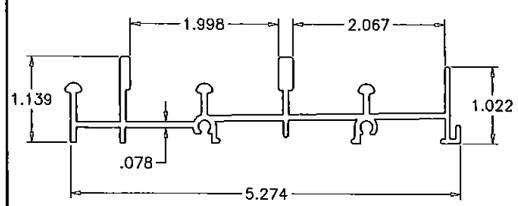

2 FRAME SILL

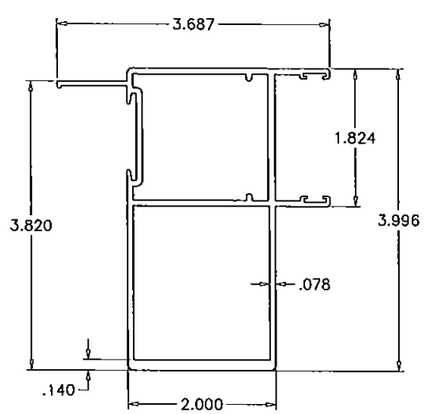

9 PANEL FEMALE ASTRAGAL

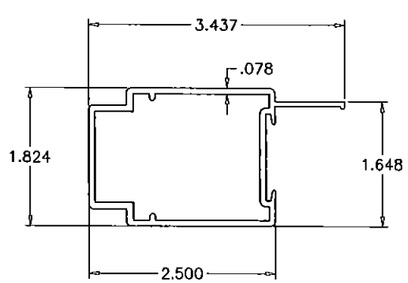

8 PANEL MALE ASTRAGAL

PRODUCT REVISED
as complying with the Florida Building Code
Acceptance No 15-0612.05
Expiration Date 3/20/19
By Ishaq I. Chowdhury
Miami-Dade Product Control

Engr: JAVAD AHMAD
CIVIL
FLA. PE # 70592
C.A.N. 3538
DEC 2015

AL-FAROOQ CORPORATION
ENGINEERS & PROJECT DEVELOPMENT
9360 SUNSET DRIVE, SUITE 220
MIAMI, FLORIDA 33173
TEL. (305) 264-8100 FAX. (305) 262-6978
COMP-ANL\W13-49ECO

SERIES-700 ALUM SLIDING GLASS DOOR (L.M.I.)

ECO WINDOW SYSTEMS, LLC.
9114 N.W. 106 STREET
MEDLEY, FL. 33178
TEL. (305) 885-5299 FAX (305) 885-5902

revisions:

no	date	by	description
A	01.16.14		REV. PER RER COMMENTS
B	06.08.15		UPDATED TO 2014 FBC
C	12.01.15		NO CHANGE THIS SHEET

date: 09-27-13
scale: 1/2" = 1"
dr. by: HAMID
chk. by:

drawing no.
W13-49

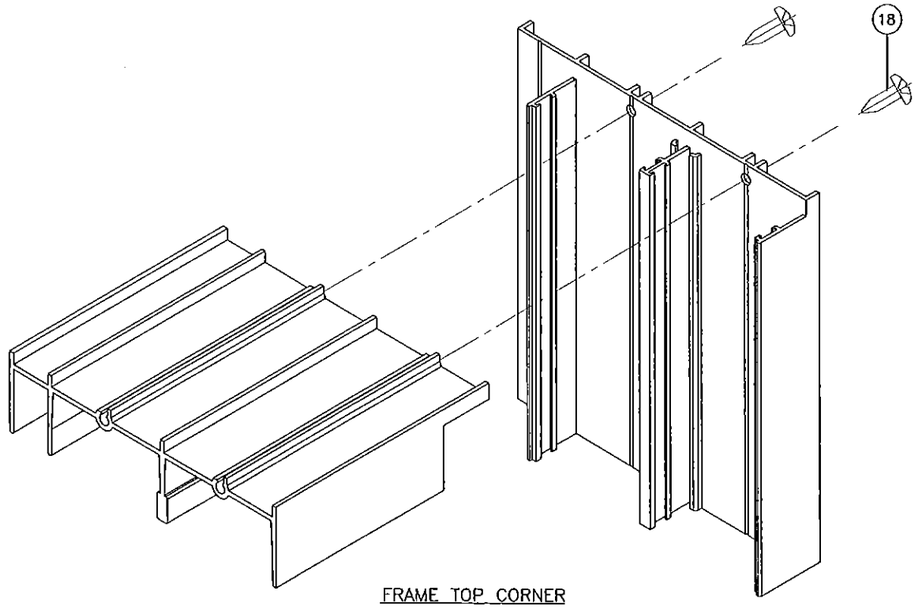

FRAME TOP CORNER

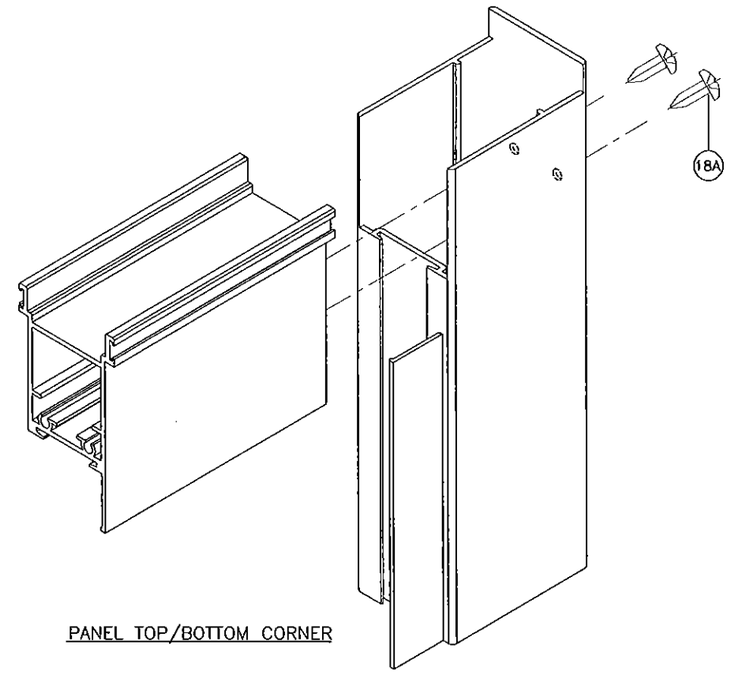

PANEL TOP/BOTTOM CORNER

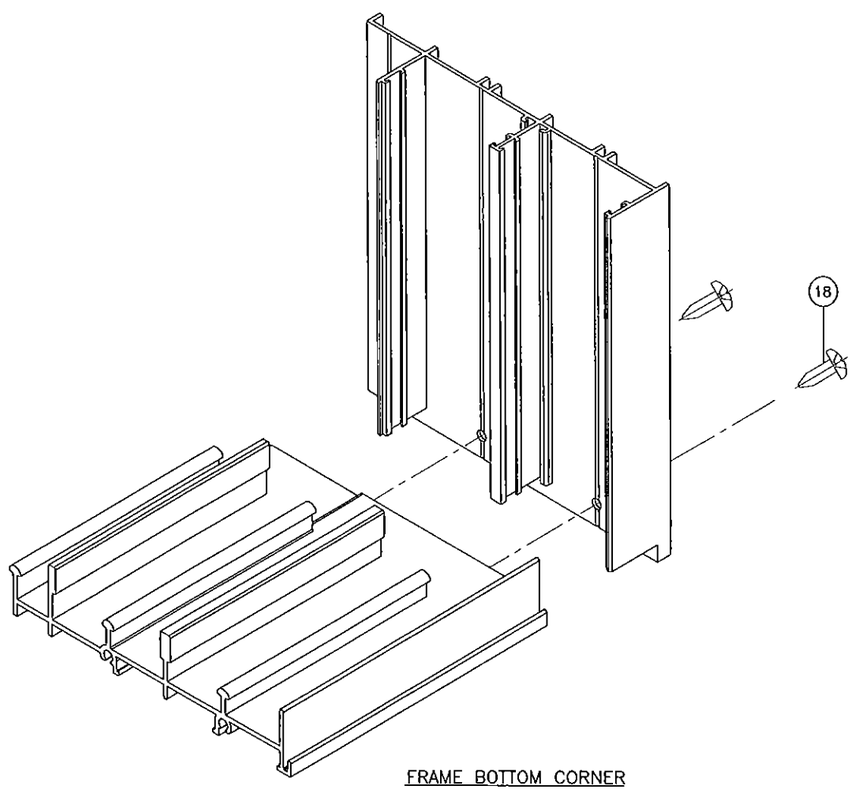

FRAME BOTTOM CORNER

PRODUCT REVISED
as complying with the Florida Building Code
Acceptance No. 15-0612.05
Expiration Date 3/20/2019
By [signature]
Miami Dade Product Control

Engr: JAVAD AHMAD
CIVIL
FLA. PE # 70592
C.A.N. 3538

DEC 9 2015

AL-FAROOQ CORPORATION
ENGINEERS & PRODUCT DEVELOPMENT
9360 SUNSET DRIVE, SUITE 220
MIAMI, FLORIDA 33173
TEL. (305) 264-8100 FAX. (305) 262-6978

COMP-ANL\W13-49ECO

SERIES-700 ALUM SLIDING GLASS DOOR (L.M.I.)

ECO WINDOW SYSTEMS, LLC.
9114 N.W. 106 STREET
MEDLEY, FL. 33178
TEL. (305) 885-5299 FAX (305) 885-5902

revisions:

no	date	by	description
A	01.16.14		NO CHANGE THIS SHEET
B	06.08.15		UPDATED TO 2014 FBC
C	12.01.15		NO CHANGE THIS SHEET

date: 09-27-13
scale: 1/2" = 1"
dr. by: HAMID
chk. by:

drawing no.
W13-49

MIAMI-DADE COUNTY
DEPARTMENT OF REGULATORY AND ECONOMIC RESOURCES (RER)
BOARD AND CODE ADMINISTRATION DIVISION

MIAMI-DADE COUNTY, FLORIDA
PRODUCT CONTROL SECTION
11805 SW 26 Street, Room 208
T (786) 315–2590 F (786) 315–2599
www.miamidade.gov/economy

NOTICE OF ACCEPTANCE (NOA)

Eco Window Systems, LLC
9114 NW 106 Street
Miami, FL 33178

SCOPE:

This NOA is being issued under the applicable rules and regulations governing the use of construction materials. The documentation submitted has been reviewed and accepted by Miami–Dade County RER–Product Control Section to be used in Miami–Dade County and other areas where allowed by the Authority Having Jurisdiction (AHJ).

This NOA shall not be valid after the expiration date stated below. The Miami–Dade County Product Control Section (In Miami–Dade County) and/or the AHJ (in areas other than Miami–Dade County) reserve the right to have this product or material tested for quality assurance purposes. If this product or material fails to perform in the accepted manner, the manufacturer will incur the expense of such testing and the AHJ may immediately revoke, modify, or suspend the use of such product or material within their jurisdiction. RER reserves the right to revoke this acceptance, if it is determined by Miami–Dade County Product Control Section that this product or material fails to meet the requirements of the applicable building code.

This product is approved as described herein, and has been designed to comply with the Florida Building Code, including the High Velocity Hurricane Zone.

DESCRIPTION: Series "ECO–Guard 50" Aluminum Single Hung Window – L.M.I.

APPROVAL DOCUMENT: Drawing No. **W12–40**, titled "ECO–Guard Series–50 Alum S.H. WDW. (L.M.I.)", sheets 01 through 04 of 04, dated 07/18/12, prepared by Al–Farooq Corporation, signed and sealed by Javad Ahmad, P. E., bearing the Miami–Dade County Product Control Section Approval stamp with the Notice of Acceptance number and Approval date by the Miami–Dade County Product Control Section.

MISSILE IMPACT RATING: Large and Small Missile Impact Resistant

LABELING: Each unit shall bear a permanent label with the manufacturer's name or logo, city, state, model/series, and following statement: "Miami–Dade County Product Control Approved", unless otherwise noted herein.

RENEWAL of this NOA shall be considered after a renewal application has been filed and there has been no change in the applicable building code negatively affecting the performance of this product.

TERMINATION of this NOA will occur after the expiration date or if there has been a revision or change in the materials, use, and/ or manufacture of the product or process. Misuse of this NOA as an endorsement of any product, for sales, advertising or any other purposes shall automatically terminate this NOA. Failure to comply with any section of this NOA shall be cause for termination and removal of NOA.

ADVERTISEMENT: The NOA number preceded by the words Miami–Dade County, Florida, and followed by the expiration date may be displayed in advertising literature. If any portion of the NOA is displayed, then it shall be done in its entirety.

INSPECTION: A copy of this entire NOA shall be provided to the user by the manufacturer or its distributors and shall be available for inspection at the job site at the request of the Building Official.

This NOA consists of this page 1 and evidence pages E–1 and E–2, as well as approval document mentioned above.

The submitted documentation was reviewed by **Jaime D. Gascon, P. E.**

MIAMI-DADE COUNTY APPROVED

J. Gascon
11/14/12

NOTICE OF ACCEPTANCE: EVIDENCE SUBMITTED

A. DRAWINGS

1. Manufacturer's die drawings and sections.
2. Drawing No. **W12–40**, titled "ECO–Guard Series–50 Alum. S.H. WDW. (L.M.I.)", sheets 01 through 04 of 04, dated 07/18/12, prepared by Al–Farooq Corporation, signed and sealed by Javad Ahmad, P. E.

B. TESTS

1. Test reports on:
   1) Air Infiltration Test, per FBC, TAS 202–94
   2) Uniform Static Air Pressure Test, Loading per FBC, TAS 202–94
   3) Water Resistance Test, per FBC, TAS 202–94
   4) Large Missile Impact Test per FBC, TAS 201–94
   5) Cyclic Wind Pressure Loading per FBC, TAS 203–94
   6) Forced Entry Test, Type "A–A" Window, Grade 10, Level LV 1 per ASTM F 588–07 and per FBC 2411 3.2.1, TAS 202–94
   7) Standard Test Methods for Deglazing Force of Fenestration Products per ASTM E 987–88 (2009)
   8) Standard Test Method for Determination of Operating Force of Sliding Windows and Doors per ASTM E 2068–00 (2008)

   along with marked–up drawings and installation diagram of a single hung window, prepared by Fenestration Testing Laboratory, Inc., Test Report No. **FTL–6951**, dated 07/02/12, signed and sealed by Marlin D. Brinson, P. E.

C. CALCULATIONS

1. Anchor calculations and structural analysis, complying with **FBC–2010**, prepared by Al–Farooq Corporation, dated 07/23/12, signed, sealed and dated 11/07/12 by Javad Ahmad, P. E.
2. **Glazing complies with ASTM E1300–04**

D. QUALITY ASSURANCE

1. Miami–Dade Department of Regulatory and Economic Resources (RER).

E. MATERIAL CERTIFICATIONS

1. Notice of Acceptance No. **11–1102.11** issued to **Solutia, Inc.** for their "**Saflex Clear and Color Glass Interlayers**" dated 06/14/12, expiring on 05/21/16.

Jaime D. Gascon, P. E.
Product Control Section Supervisor
NOA No. 12–0820.08
Expiration Date: November 21, 2017
Approval Date: November 21, 2012

NOTICE OF ACCEPTANCE: EVIDENCE SUBMITTED

F. STATEMENTS

1. Statement letter of conformance, complying with **FBC–2010**, issued by Al–Farooq Corporation, dated 07/16/12, signed and sealed by Javad Ahmad, P. E.
2. Laboratory compliance letter for Test Report No. **FTL–6951**, issued by Fenestration Testing Laboratory, Inc., dated 07/02/12, signed and sealed by Marlin D. Brinson, P. E.
3. Proposal issued by Product Control, dated 04/11/12, signed by Jaime D. Gascon, P. E.

G. OTHERS

1. None.

Jaime D. Gascon, P. E.
Product Control Section Supervisor
NOA No. 12–0820.08
Expiration Date: November 21, 2017
Approval Date: November 21, 2012

DESIGN LOAD CAPACITY – PSF			
FLANGE DIMS.		5/16" LAM. GLASS	
WIDTH	HEIGHT	EXT.(+)	INT.(–)
19–1/8"	26" (4)	55.0	60.0
26–1/2"		55.0	60.0
37"		55.0	60.0
44"		55.0	60.0
53–1/8"		55.0	60.0
19–1/8"	38–3/8" (4)	55.0	60.0
26–1/2"		55.0	60.0
37"		55.0	60.0
44"		55.0	60.0
53–1/8"		55.0	60.0
19–1/8"	50–5/8" (5)	55.0	60.0
26–1/2"		55.0	60.0
37"		55.0	60.0
44"		55.0	60.0
53–1/8"		55.0	60.0
19–1/8"	63" (6)	55.0	60.0
26–1/2"		55.0	60.0
37"		55.0	60.0
44"		55.0	60.0
53–1/8"		55.0	60.0
19–1/8"	76" (8)	55.0	60.0
26–1/2"		55.0	60.0
37"		55.0	60.0
44"		55.0	60.0

* NO. IN PARENTHESIS INDICATE NO. OF ANCHORS PER JAMB.

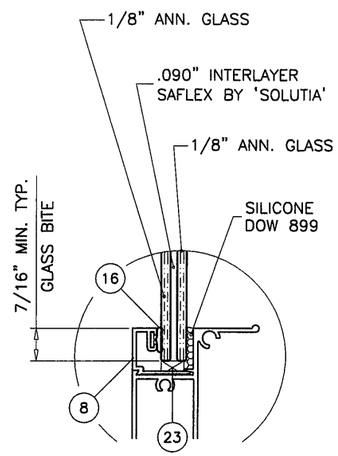

GLAZING DETAIL

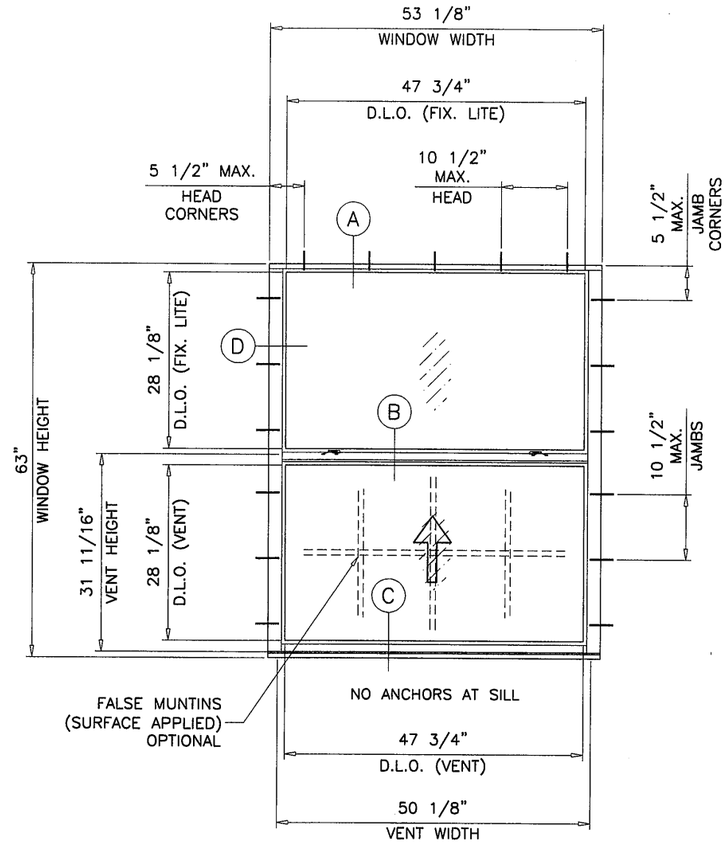

TYPICAL ELEVATION
TESTED UNITS

ECO–GUARD SERIES–50
ALUMINUM SINGLE HUNG WINDOW

DESIGN LOAD RATINGS FOR THESE WINDOWS TO BE AS PER CHARTS SHOWN ABOVE.

APPROVAL APPLIES TO SINGLE UNITS OR SIDE BY SIDE COMBINATIONS OF S.H./S.H. OR SINGLE HUNG WITH OTHER WINDOW TYPES IN MODULES OF TWO OR MORE WINDOWS USING MIAMI–DADE COUNTY APPROVED MULLIONS IN BETWEEN. LOWER DESIGN PRESSURE FROM WINDOWS OR MULLION APPROVAL WILL APPLY TO ENTIRE SYSTEM.

THIS PRODUCT HAS BEEN DESIGNED AND TESTED TO COMPLY WITH THE REQUIREMENTS OF THE FLORIDA BUILDING CODE INCLUDING HIGH VELOCITY HURRICANE ZONE (HVHZ).

WOOD BUCKS BY OTHERS, MUST BE ANCHORED PROPERLY TO TRANSFER LOADS TO THE STRUCTURE.

ANCHORS SHALL BE AS LISTED, SPACED AS SHOWN ON DETAILS, ANCHORS EMBEDMENT TO BASE MATERIAL SHALL BE BEYOND WALL DRESSING OR STUCCO.

ANCHORING OR LOADING CONDITIONS NOT SHOWN IN THESE DETAILS ARE NOT PART OF THIS APPROVAL.

A LOAD DURATION INCREASE IS USED IN DESIGN OF ANCHORS INTO WOOD ONLY.

MATERIALS INCLUDING BUT NOT LIMITED TO STEEL/METAL SCREWS, THAT COME INTO CONTACT WITH OTHER DISSIMILAR MATERIALS SHALL MEET THE REQUIREMENTS OF THE FLORIDA BLDG. CODE SECTION 2003.8.4.

Approved as complying with the Florida Building Code
Date 11/22/2012
NOA# 12-0820.08
Miami-Dade Product Control
By

THESE WINDOWS ARE RATED FOR LARGE MISSILE IMPACT. SHUTTERS ARE NOT REQUIRED.

Engr: JAVAD AHMAD
CIVIL
FLA. PE # 70592
C.A.N. 3538

JUL 23 2012

NOTE:
GLASS CAPACITIES ON THIS SHEET ARE BASED ON ASTM E1300–04 (3 SEC. GUSTS) AND FLORIDA BUILDING COMMISSION DECLARATORY STATEMENT DCA05–DEC–219

AL-FAROOQ CORPORATION
ENGINEERS & PRODUCT DEVELOPMENT
1235 S.W. 87 AVE
MIAMI, FLORIDA 33174
TEL. (305) 264-8100 FAX. (305) 262-6978
COMP–ANL\W12–40ECO

ECO–GUARD SERIES–50 ALUM S.H. WDW. (L.M.I.)

ECO WINDOW SYSTEMS, LLC.
9114 N.W. 106 STREET
MEDLEY, FL. 33178
TEL. (305) 885–5299 FAX (305) 885–5902

revisions:			
no	date	by	description

date: 07–18–12
scale: 1/2"–1'–0"
dr. by: HAMID
chk. by:

drawing no.
W12–40

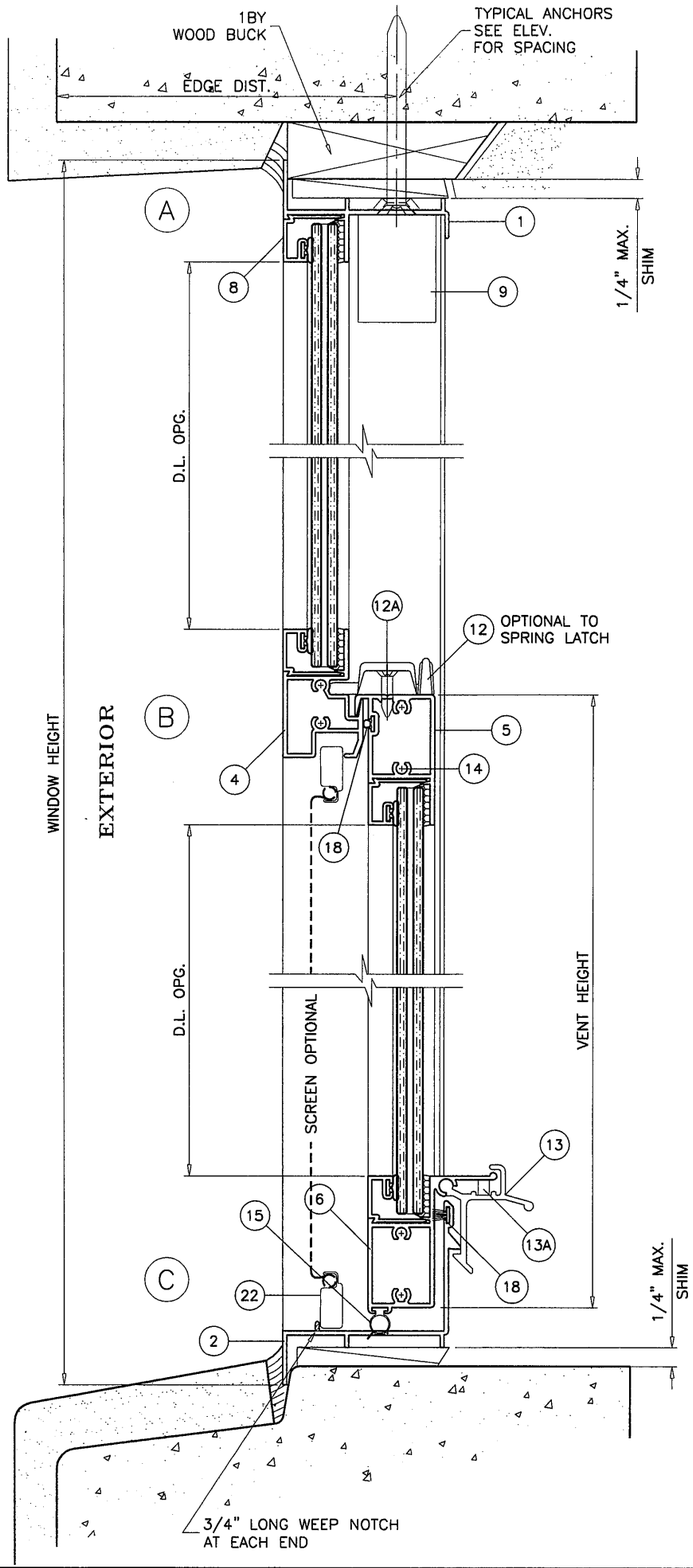

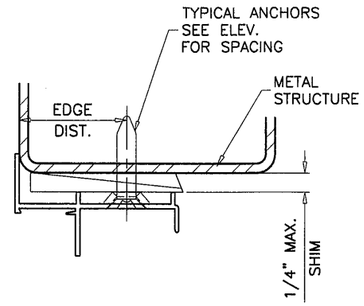

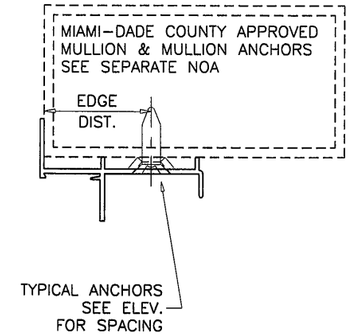

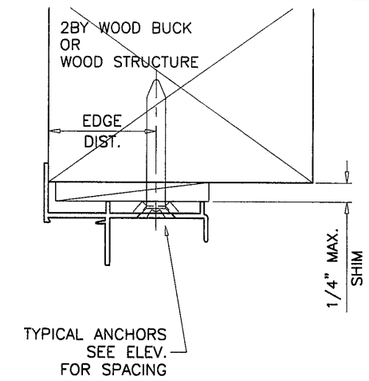

WOOD BUCKS AND METAL STRUCTURE NOT BY ECO WDW.
MUST SUSTAIN LOADS IMPOSED BY GLAZING SYSTEM
AND TRANSFER THEM TO THE BUILDING STRUCTURE.

TYPICAL ANCHORS: SEE ELEV. FOR SPACING

1/4" DIA. TAPCON BY 'ITW' (Fu=120 KSI, Fy=92 KSI)
1/4" DIA. ULTRACON BY 'ELCO' (Fu=177 KSI, Fy=155 KSI)
INTO 2BY WOOD BUCKS OR WOOD STRUCTURES
1-1/2" MIN. PENETRATION INTO WOOD

THRU 1BY BUCKS INTO CONC. OR MASONRY
1-1/4" MIN. EMBED INTO CONC. OR MASONRY

DIRECTLY INTO CONC. OR MASONRY
1-1/4" MIN. EMBED INTO CONC. OR MASONRY

1/4" DIA. TEKS OR SELF DRILLING SCREWS (GRADE 5 CRS)
INTO METAL STRUCTURES
STEEL : 12 GA. MIN. (Fy = 36 KSI MIN.)
ALUMINUM : 1/8" THK. MIN. (6063-T5 MIN.)
(STEEL IN CONTACT WITH ALUMINUM TO BE PLATED OR PAINTED)

#14 SMS OR SELF DRILLING SCREWS (GRADE 2 CRS)
INTO MIAMI-DADE COUNTY APPROVED MULLIONS (MIN. THK. = .090")
(NO SHIM SPACE)

TYPICAL EDGE DISTANCE
INTO CONCRETE AND MASONRY = 2" MIN.
INTO WOOD STRUCTURE = 1" MIN.
INTO METAL STRUCTURE = 3/4" MIN.

CONCRETE AT HEAD, SILL OR JAMBS f'c = 3000 PSI MIN.
C-90 HOLLOW/FILLED BLOCK AT JAMBS f'm = 2000 PSI MIN.

Approved as complying with the
Florida Building Code
Date 11/21/2012
NOA# 12-0820.08
Miami Dade Product Control
By

Engr: JAVAD AHMAD
CIVIL
FLA. PE # 70592
C.A.N. 3538
JUL 23 2012

SEALANT:

ALL JOINTS AND FRAME CONNECTIONS SEALED WITH JOINT SEALER.

AL-FAROOQ CORPORATION
ENGINEERS & PRODUCT DEVELOPMENT
1235 S.W. 87 AVE
MIAMI, FLORIDA 33174
TEL. (305) 264-8100 FAX. (305) 262-6978

COMP-ANL\W12-40ECO

ECO-GUARD SERIES-50 ALUM S.H. WDW. (L.M.I.)

ECO WINDOW SYSTEMS, LLC.
9114 N.W. 106 STREET
MEDLEY, FL. 33178
TEL. (305) 885-5299 FAX (305) 885-5902

revisions:			
no	date	by	description

date: 07-18-12
scale: 1/2" = 1"
dr. by: HAMID
chk. by:

drawing no.
W12-40

ITEM #	PART #	REQD.	DESCRIPTION	MATERIAL	MANF./SUPPLIER/REMARKS
1	E51	1	FRAME HEAD	6063–T6	–
2	E52	1	FRAME SILL	6063–T6	–
3	E53	2	FRAME JAMB	6063–T6	–
4	E54	1	FIXED MTG. RAIL	6063–T6	–
5	E55	1	VENT TOP RAIL	6063–T6	–
6	E56	1	VENT BOTTOM RAIL	6063–T6	–
7	E57	2	VENT SIDE RAIL	6063–T6	–
8	E58	AS REQD.	GLAZING BEAD (5/16" LAM. GLASS)	6063–T6	–
9	E59	2/VENT	SASH STOP	6063–T5	–
12	SL203P	2/VENT	SWEEP LATCH	ZAMAK	SULLIVAN & ASSOC.
12A	#8 X 5/8"	2/ LATCH	LATCH INST. SCREWS	ST. STEEL	FH SMS
13	FY–113	2/ VENT	SPRING LOADED LATCH	6063–T6	ALTERNATE TO SWEEP LATCH
13A	–	1/ LATCH	LATCH SPRING	ST. STEEL	–
14	#8 X 1"	AS REQD.	FRAME & VENT ASSEMBLY SCREWS	CRS	PH SMS
15	E207	AS REQD.	BOTTOM RAIL SEAL – SERIES 101	NEOPRENE	ULTRAFAB
16	E203	AS REQD.	GLAZING BEAD BULB	SANTOPRENE	ULTRAFAB
18	W23181	AS REQD.	FIN SEAL W'STRIPPING	–	ULTRAFAB
20	–	2/ VENT	BLOCK AND TACKLE BALANCE	–	–
21	E60	2/ VENT	SASH CAM	NYLON	–
22	–	1	5/16" BOX SCREEN	–	OPTIONAL
23	–	AS REQD.	SETTING BLOCK	NEOPRENE	DUROMETER 75±5

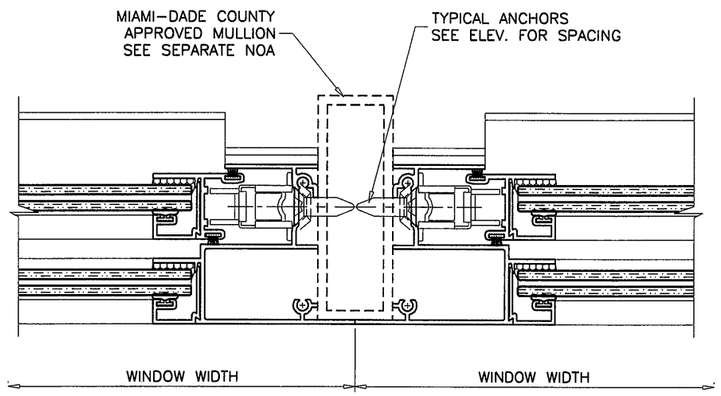

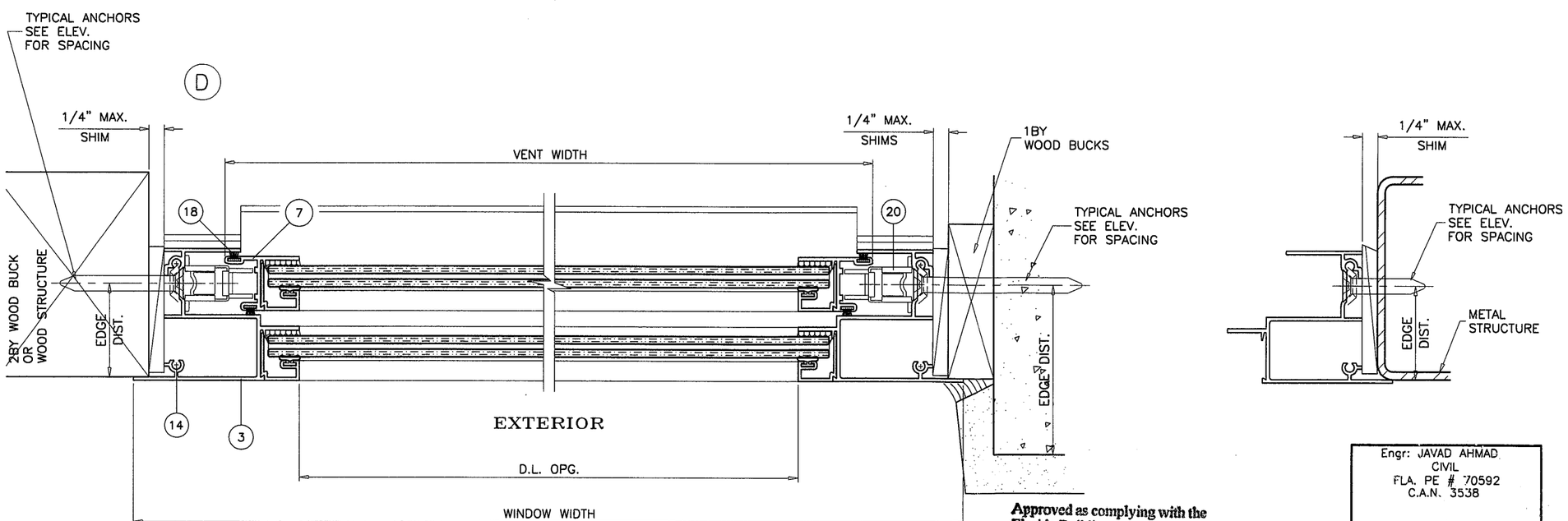

Approved as complying with the
Florida Building Code
Date 11/26/2012
NOA# 12-0820.08
Miami Dade Product Control
By

Engr: JAVAD AHMAD
CIVIL
FLA. PE # 70592
C.A.N. 3538

JUL 23 2012

AL-FAROOQ CORPORATION
ENGINEERS & PRODUCT DEVELOPMENT
1235 S.W. 87 AVE
MIAMI, FLORIDA 33174
TEL. (305) 264-8100 FAX. (305) 262-6978
COMP–ANL\W12–40ECO

ECO–GUARD SERIES–50 ALUM S.H. WDW. (L.M.I.)

ECO WINDOW SYSTEMS, LLC.
9114 N.W. 106 STREET
MEDLEY, FL. 33178
TEL. (305) 885–5299 FAX (305) 885–5902

revisions:		
no	date	by	description

date: 07–18–12
scale: 1/2" = 1"
dr. by: HAMID
chk. by:

drawing no.
W12–40

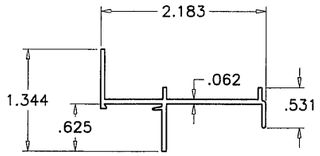

1 FRAME HEAD

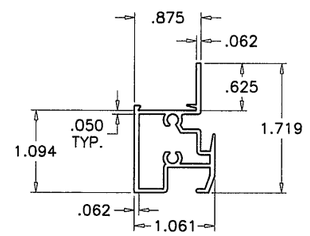

4 FIX. MEETING RAIL

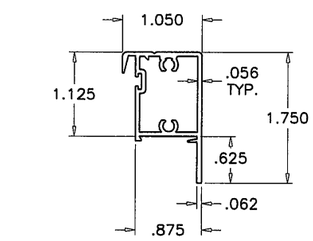

5 VENT TOP RAIL

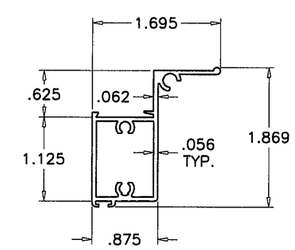

6 VENT BOTTOM RAIL

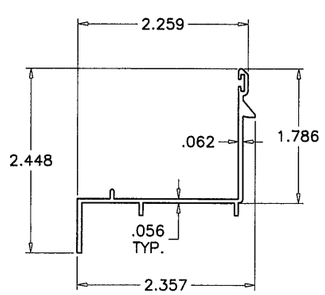

2 FRAME SILL

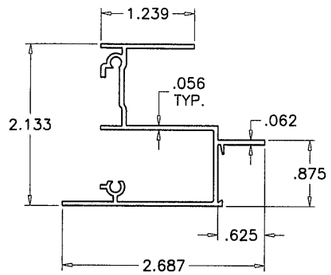

3 FRAME JAMB

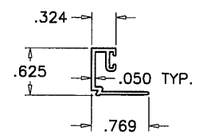

8 GLAZING BEAD

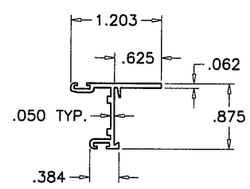

7 VENT SIDE RAIL

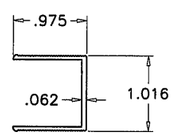

9 SASH STOP

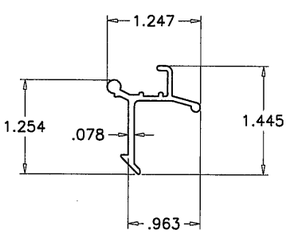

13 SPRING LOADED LATCH

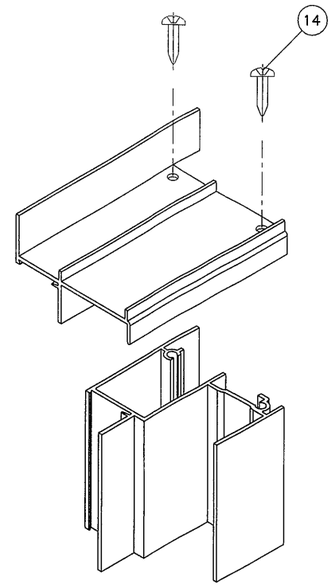

FRAME TOP CORNER

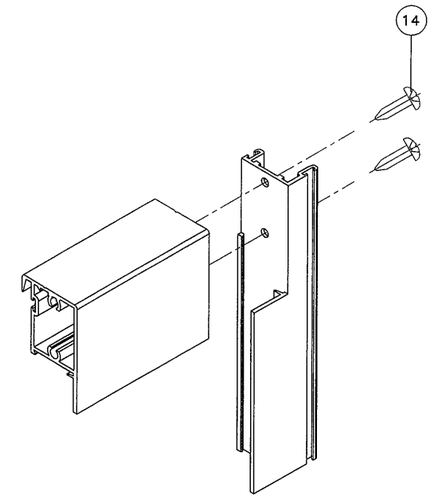

VENT TOP CORNER

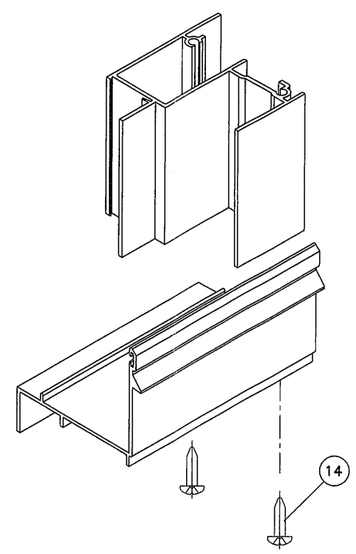

FRAME BOTTOM CORNER

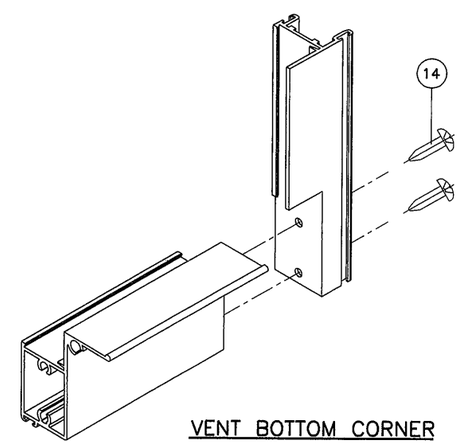

VENT BOTTOM CORNER

Approved as complying with the
Florida Building Code
Date 11/14/2012
NOA# 12-0820.08
Miami-Dade Product Control
By

Engr: JAVAD AHMAD
CIVIL
FLA. PE # 70592
C.A.N. 3538

JUL 23 2012

AL-FAROOQ CORPORATION
ENGINEERS & PRODUCT DEVELOPMENT
1235 S.W. 87 AVE
MIAMI, FLORIDA 33174
TEL. (305) 264-8100 FAX. (305) 262-6978

COMP-ANL\W12-40ECO

ECO-GUARD SERIES-50 ALUM S.H. WDW. (L.M.I.)

ECO WINDOW SYSTEMS, LLC.
9114 N.W. 106 STREET
MEDLEY, FL. 33178
TEL. (305) 885-5299 FAX (305) 885-5902

revisions:

no	date	by	description

date: 07-18-12
scale: 1/2" = 1"
dr. by: HAMID
chk. by:

drawing no.
W12-40

sheet 4 of 4

MIAMI-DADE COUNTY

DEPARTMENT OF REGULATORY AND ECONOMIC RESOURCES (RER)
BOARD AND CODE ADMINISTRATION DIVISION

MIAMI-DADE COUNTY
PRODUCT CONTROL SECTION
11805 SW 26 Street, Room 208
Miami, Florida 33175-2474
T (786) 315-2590 F (786) 315-2599
www.miamidade.gov/economy

NOTICE OF ACCEPTANCE (NOA)

Sunlast Metal, Inc.
2120 SW Poma Drive
Palm City, FL. 34990

SCOPE:

This NOA is being issued under the applicable rules and regulations governing the use of construction materials. The documentation submitted has been reviewed and accepted by Miami-Dade County RER - Product Control Section to be used in Miami Dade County and other areas where allowed by the Authority Having Jurisdiction (AHJ).

This NOA shall not be valid after the expiration date stated below. The Miami-Dade County Product Control Section (In Miami Dade County) and/or the AHJ (in areas other than Miami Dade County) reserve the right to have this product or material tested for quality assurance purposes. If this product or material fails to perform in the accepted manner, the manufacturer will incur the expense of such testing and the AHJ may immediately revoke, modify, or suspend the use of such product or material within their jurisdiction. RER reserves the right to revoke this acceptance, if it is determined by Miami-Dade County Product Control Section that this product or material fails to meet the requirements of the applicable building code.
This product is approved as described herein, and has been designed to comply with the Florida Building Code including the High Velocity Hurricane Zone of the Florida Building Code.

DESCRIPTION: PAC-150 24 ga. x 12" thru 20" Wide Steel Panel over Plywood

LABELING: Each unit shall bear a permanent label with the manufacturer's name or logo, city, state and following statement: "Miami-Dade County Product Control Approved", unless otherwise noted herein.

RENEWAL of this NOA shall be considered after a renewal application has been filed and there has been no change in the applicable building code negatively affecting the performance of this product.

TERMINATION of this NOA will occur after the expiration date or if there has been a revision or change in the materials, use, and/or manufacture of the product or process. Misuse of this NOA as an endorsement of any product, for sales, advertising or any other purposes shall automatically terminate this NOA. Failure to comply with any section of this NOA shall be cause for termination and removal of NOA.

ADVERTISEMENT: The NOA number preceded by the words Miami-Dade County, Florida, and followed by the expiration date may be displayed in advertising literature. If any portion of the NOA is displayed, then it shall be done in its entirety.

INSPECTION: A copy of this entire NOA shall be provided to the user by the manufacturer or its distributors and shall be available for inspection at the job site at the request of the Building Official.

This NOA consists of pages 1 through 5.
The submitted documentation was reviewed by Carlos M. Utrera, P.E.

MIAMI-DADE COUNTY APPROVED

ROOFING SYSTEM APPROVAL:

Category:	Roofing
Sub-Category:	Metal, Panels (Non-Structural)
Material:	Steel
Deck Type:	Wood
Maximum Design Pressure	**-136.75 psf**

TRADE NAMES OF PRODUCTS MANUFACTURED OR LABELED BY APPLICANT:

Product	Dimensions	Test Specifications	Product Description
PAC-150 1.5" Steel Panel	Length: various Height: 1-1/2" Width: 12" - 20" (coverage) Thickness 24 ga Min. Yield Strength: 55 ksi.	TAS 110	Corrosion resistant, galvalume, preformed, standing seam. Coated, prefinished panels.
PAC-150 Clip	Length: 2" Height: 1.625" Width: 0.875" Thickness 24 ga	TAS 110	Corrosion resistant, 24 gauge steel clip or 24 ga. stainless steel clip.

EVIDENCE SUBMITTED:

Test Agency	Test Identifier	Test Name/Report	Date
Valspar	433X515	ASTM B 117	
Valspar	433B173	ASTM G 23	
Fenestration Testing	13-852	TAS 100	06/11/13
Architectural Testing	C8009.01-450-18	TAS 125	06/17/13

APPROVED ASSEMBLIES:

System:	PAC-150 24 ga. x 12" thru 20" Wide Steel Panels over Plywood
Deck Type:	Wood, Non-insulated
Deck Description:	New Construction $^{19}/_{32}$" or greater plywood or wood plank, or for re-roofing $^{15}/_{32}$" or greater plywood.
Slope Range:	2": 12" or greater
Maximum Uplift Pressure:	**See Table A below**

Deck Attachment:	In accordance with applicable Building Code, but in no case shall it be less than 8d annular ring shank nails spaced 6" o.c. In reroofing, where the deck is less than $^{19}/_{32}$" thick (Minimum $^{15}/_{32}$") The above attachment method must be in addition to existing attachment.
Underlayment:	Minimum underlayment shall be an ASTM D 226 Type II installed with a minimum 4" side-lap and 6" end-laps. Underlayment shall be fastened with corrosion resistant tin-caps and 12 gauge 1 ¼" annular ring-shank nails, spaced 6" o.c. at all laps and two staggered rows 12" o.c. in the field of the roll or any approved underlayment having a current NOA.
Fire Barrier:	Any approved fire barrier having a current NOA. Refer to a current fire directory listing for fire ratings of this roofing system assembly as well as the location of the fire barrier within the assembly. See Limitation # 1.
Valleys:	Valley construction shall be in compliance with Roofing Application Standard RAS 133 and with the current published installation instructions and details in PAC Contractors Association's Installation Manual.
Metal Panels and Accessories:	Install the "PAC-150 1.5 Steel Panel" including flashing penetrations, valleys, end laps and accessories in compliance "PAC Contractors Association's" current, published installation instructions and in compliance with the minimum requirements detailed in Roofing Application Standard RAS 133. Panels shall be secured along the male rib with approved clips and two corrosion resistant #10 x 1 ½" pancake head screws of sufficient length to penetrate through the sheathing a minimum of $^{3}/_{16}$". The panel clips were placed at a spacing listed in Table A below. The female rib of panel is installed over the male rib of panel. Panels are seamed as listed below in Table A.

TABLE A
MAXIMUM DESIGN PRESSURES

Roof Areas	Field	Perimeter and Corner[1]	Perimeter and Corner[1]
Maximum Design Pressures	**-69.25 psf**	**-114.25 psf**	**-136.75 psf**
Maximum Clip Spacing	**24" o.c.**	**6" o.c.**	**12" o.c.**
Panel Seam	**90° degrees**	**90° degrees**	**180° degrees**

1. Extrapolation shall not be allowed

LIMITATIONS

1. Fire classification is not part of this acceptance; refer to a current Approved Roofing Materials Directory for fire ratings of this product.
2. The maximum designed pressure listed herein shall be applicable to all roof pressure zones (i.e. field, perimeters, and corners). Neither rational analysis, nor extrapolation shall be permitted for enhanced fastening at enhanced pressure zones (i.e. perimeters, extended corners and corners).
3. Panels may be rolls formed in continuous lengths from eave to ridge. Maximum lengths shall be as described in Roofing Application Standard RAS 133.
4. All panels shall be permanently labeled with the manufacturer's name and/or logo, city, state, and the following statement: "Miami-Dade County Product Control Approved" **or** with the Miami-Dade County Product Control Seal as seen below. All clips shall be permanently labeled with the manufacturer's name and/or logo, and/or model.

MIAMI-DADE COUNTY
APPROVED

5. All products listed herein shall have a quality assurance audit in accordance with the Florida Building Code and Rule 61G20-3 of the Florida Administrative Code.
6. Panels may be shop or jobsite roll formed with machine model **#10120107, 8560904, or RF6631** from PAC Contractors Association.

PROFILE DRAWINGS

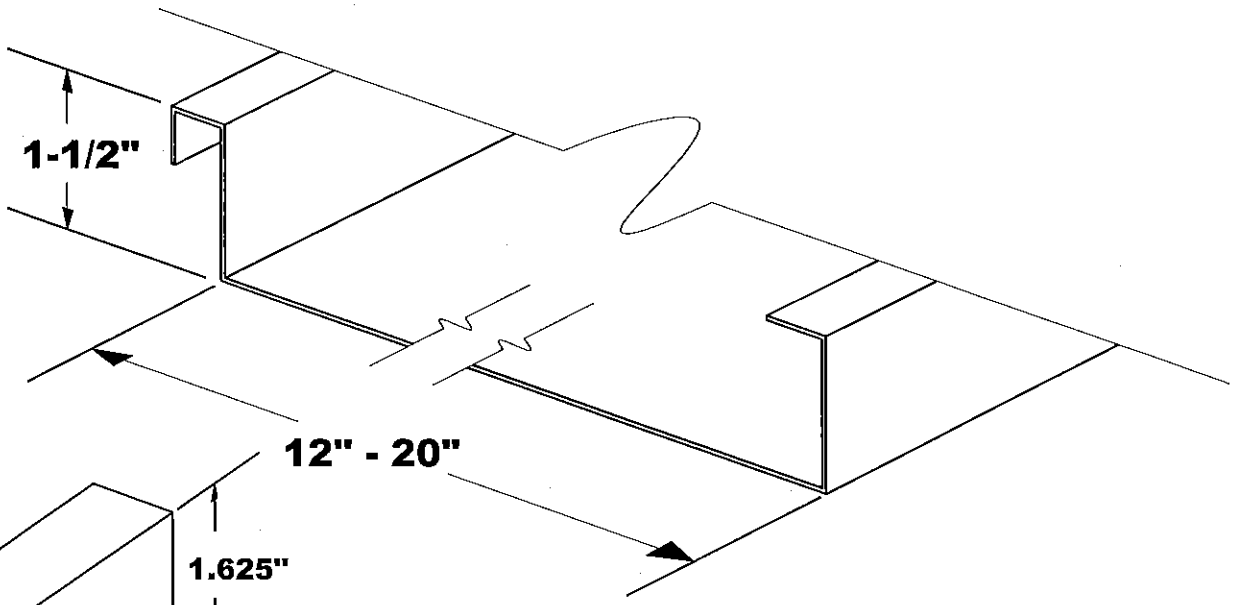

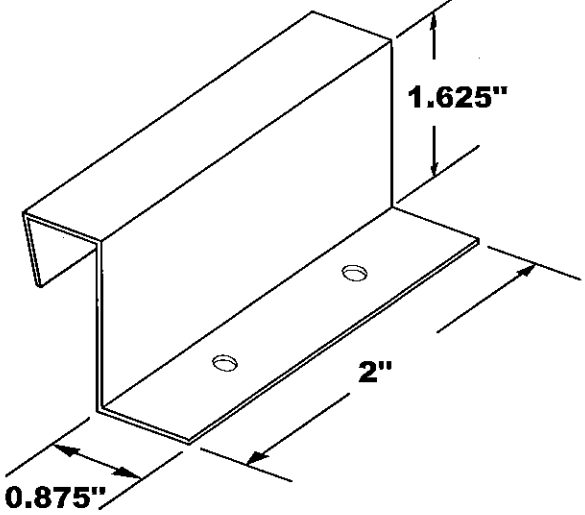

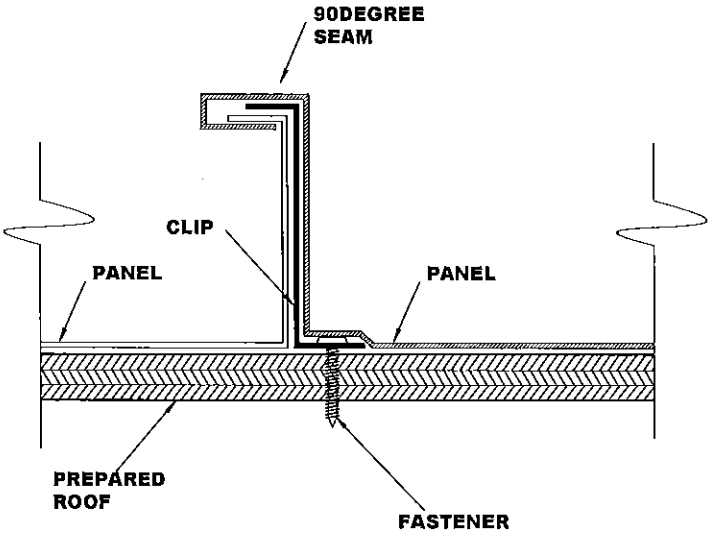

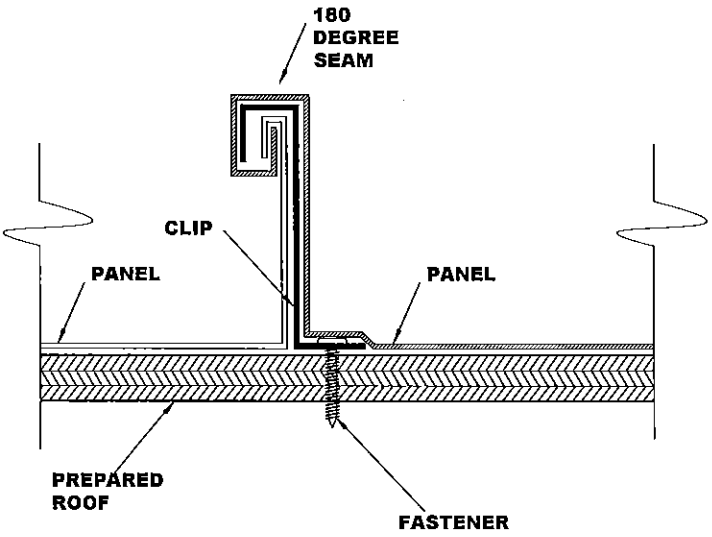

END OF THIS ACCEPTANCE

MIAMI-DADE COUNTY APPROVED

Lake Worth, Florida. The Art of Florida Living.sm

City Of Lake Worth
Department for Community Sustainability
Planning, Zoning and Historic Preservation Division
1900 Second Avenue North · Lake Worth · Florida 33461· Phone: 561-586-1687

MEMORANDUM DATE: May 4, 2016

AGENDA DATE: May 11, 2016

TO: Chair and Members of the Historic Resources Preservation Board

RE: **817 South Palmway**

FROM: Aimee N. Sunny, Senior Preservation Coordinator
Department for Community Sustainability

TITLE: **HRPB Project Number 16-00100079**: Consideration of a Certificate of Appropriateness (COA) for roof replacement to the subject property located at **817 South Palmway**, PCN# 38-43-44-27-01-022-0120. The subject building was constructed in 1940 and the property is a contributing resource within the South Palm Park Local Historic District.

OWNER: Jim and Ann Maxwell
817 S Palmway
Lake Worth, FL 33460

BACKGROUND:

The property at 817 South Palmway has a one-story single-family structure built in 1940 in a Frame Vernacular style. The property has public frontage on South Palmway to the east. The original architectural plans for the main house are available in the City's property files. The building retains the overall layout and configuration consistent with the frame vernacular architectural style, however, the building has undergone numerous alterations over time. In the property file there are permits for the installation of aluminum siding, extension to the garage, a rear addition, roof replacement from metal shingles to asphalt shingles, and the re-configuration of (1) window and (1) door on the garage. Overall, the building retains a moderate level of historic integrity of location, setting, materials, craftsmanship, and design.

REQUEST:
The Applicant is proposing to replace the existing asphalt shingle roof with a Southeastern Metals 5v Crimp aluminum roof panel system.

COMPREHENSIVE PLAN CONSISTENCY:
It is the analysis of Staff that the project, as proposed, is not consistent with the Comprehensive Plan goals and objectives concerning historic preservation and housing due to the fact that the Applicant is proposing a change that will have an adverse effect on the historic integrity of the property.

Goal 1.4 Encourage preservation and rehabilitation of historic and natural resources and where appropriate restrict development that would damage or destroy these resources. (Objective 1.4.2)

Objective 3.2.5: To encourage the identification of historically significant housing, and to promote its preservation and rehabilitation as referenced by the Surveys of Historic Properties conducted for the City of Lake Worth.

Policy 3.2.5.1: Properties of special value for historic, architectural, cultural or aesthetic reasons will be restored and preserved through the enforcement of the City's Historic Preservation Ordinance to the extent feasible.

CONSEQUENT ACTION:
Approve the application; approve the application with conditions; continue the hearing to a date certain to request additional information; or deny the application.

ANALYSIS:
Staff has reviewed the documentation and materials provided in this application and applied the applicable guidelines and standards found in the City's Historic Preservation Ordinance, detailed in Attachment 1 – Decision Criteria.

The National Park Service and Secretary of the Interior's Standards have very specific criteria regarding replacement of historic materials. Specifically Standards 2, 5, and 6 apply in this situation:

Standard 2 - The historic character of a property will be retained and preserved. The removal of distinctive materials or alteration of features, spaces, and spatial relationships that characterize a property will be avoided.

Standard 5 - Distinctive materials, features, finishes, and construction techniques or examples of craftsmanship that characterize a property will be preserved.

Standard 6 - Deteriorated historic features will be repaired rather than replaced. Where the severity of deterioration requires replacement of a distinctive feature, the new feature will match the old in design, color, texture, and, where possible, materials. Replacement of missing features will be substantiated by documentary and physical evidence.

According to the Secretary of the Interior's Standards, disctinctive materials that characterize a property shall be preserved. The roof material is an important character defining feature of a historic property. According to the architect's specification book provided in the City's property file, and included as Attachment 4, the original roof material installed in 1940 was "interlocking galvanized metal shingles, with a 15 lb. felt underlayment. The original metal shingles were replaced in 1974 with asphalt shingles. In April, the applicant requested to replace the existing the asphalt shingle roof with a 5v crimp metal roof.

It is the opinion of Staff that the proposed change to an aluminum 5v crimp roof is not appropriate for the structure, and negatively effects a character defining feature of the property. The original metal shingles and replacement asphalt shingles have a horizontal rhythm and scale that is substantially different from the crisp vertical lines and shadows of the 5v crimp roof. Additionally, the Frame Vernacular style of architecture in the early 1940's primarily used metal shingles, and did not use standing seam metal. The metal shingles represent a distinctive material and level of craftsmanship that is very indicative of the local Frame Vernacular style.

The National Park Service Preservation Brief #4 "Roofing for Historic Buildings" has been included as Attachment #7. This Brief discusses the issues and options for the repair and replacement of historic roofs. Under the "Alternative Materials" section of the Brief, Staff would like to draw special attention to this paragraph:

"In a rehabilitation project, there may be valid reasons for replacing the roof with a material other than the original. The historic roofing may no longer be available, or the cost of obtaining specially fabricated materials may be prohibitive. But the decision to use an alternative material should be weighed carefully against the primary concern to keep the historic character of the building. If the roof is flat and is not visible from any elevation of the building, and if there are advantages to substituting a modern built-up composition roof for what might have been a flat metal roof, then it may make better economic and construction sense to use a modern roofing method. But if the roof is readily visible, the alternative material should match as closely as possible the scale, texture, and coloration of the historic roofing material."

Additionally, Staff has contacted the Florida Division of Historical Resources with regards to the request for roof replacement with standing seam metal. The response from the State's Senior Architect, Kenneth Cureton, is included as Attachment 6. In particular, Staff would like to draw attention to the follow excerpt,

"We would strongly advise against sheet metal products, since the strong vertical lines and shadows of such products would adversely impact the historic status of the building, as it would completely change the character of the roof and have no historical basis."

Replacement metal shingles are still available, and are therefore technically feasible. Additionally, this is the primary sloped roof for the structure and is readily visible. The metal shingles are the only product that will properly replicate the "scale, texture, and coloration of the historic roofing material" as required by National Park Service's Standards for the Rehabilitation of Historic Properties. If it is determined that the metal shingles are not financially feasible, the recommendation from the Florida Division of Historical Resources is that a light gray architectural dimensional shingle should be used. Staff will defer to the Board regarding the economic feasibility of the products.

RECOMMENDATION:

Staff recommends that the Board deny the application as submitted, given that the metal roof installation as proposed by the Applicant does not meet the Secretary of the Interior's Standards for Rehabilitation, does not meet the criteria set forth in the City of Lake Worth Land Development Regulations §23.5-4(k), and will have an adverse effect on the integrity and character of the property.

If the Board chooses to approve a replacement roof for the structure, Staff recommends the following conditions:

1) The replacement roof material shall be silver metal shingles or dimensional asphalt shingles in light grey, to replicate the original metal shingles or replacement asphalt shingles as closely as possible.

POTENTIAL MOTION:

I MOVE TO **APPROVE** HRPB 16-00100079: Consideration of a Certificate of Appropriateness (COA) for roof replacement for the subject building located at **817 South Palmway** as recommended by Staff, based upon the preponderance of competent substantial evidence, and pursuant to the City of Lake Worth Land Development Regulations Section 23.5-4.

I MOVE TO **DENY** HRPB 16-00100079: Consideration of a Certificate of Appropriateness (COA) for roof replacement for the subject building located at **817 South Palmway** because the Applicant has not established

a preponderance of the evidence that the application is in compliance with the City of Lake Worth Land Development Regulations Section 23.5-4, the Secretary of the interiors Standards for the Rehabilitation of Historic Properties, and the City's Comprehensive Plan.

ATTACHMENTS:

1. Administrative Decision Criteria
2. Application Photographs
3. Justification Statement
4. Original Architectural Drawings
5. Roof Brochure
6. Division of Historical Resources Letter
7. National Park Service Brief

LOCATION MAP

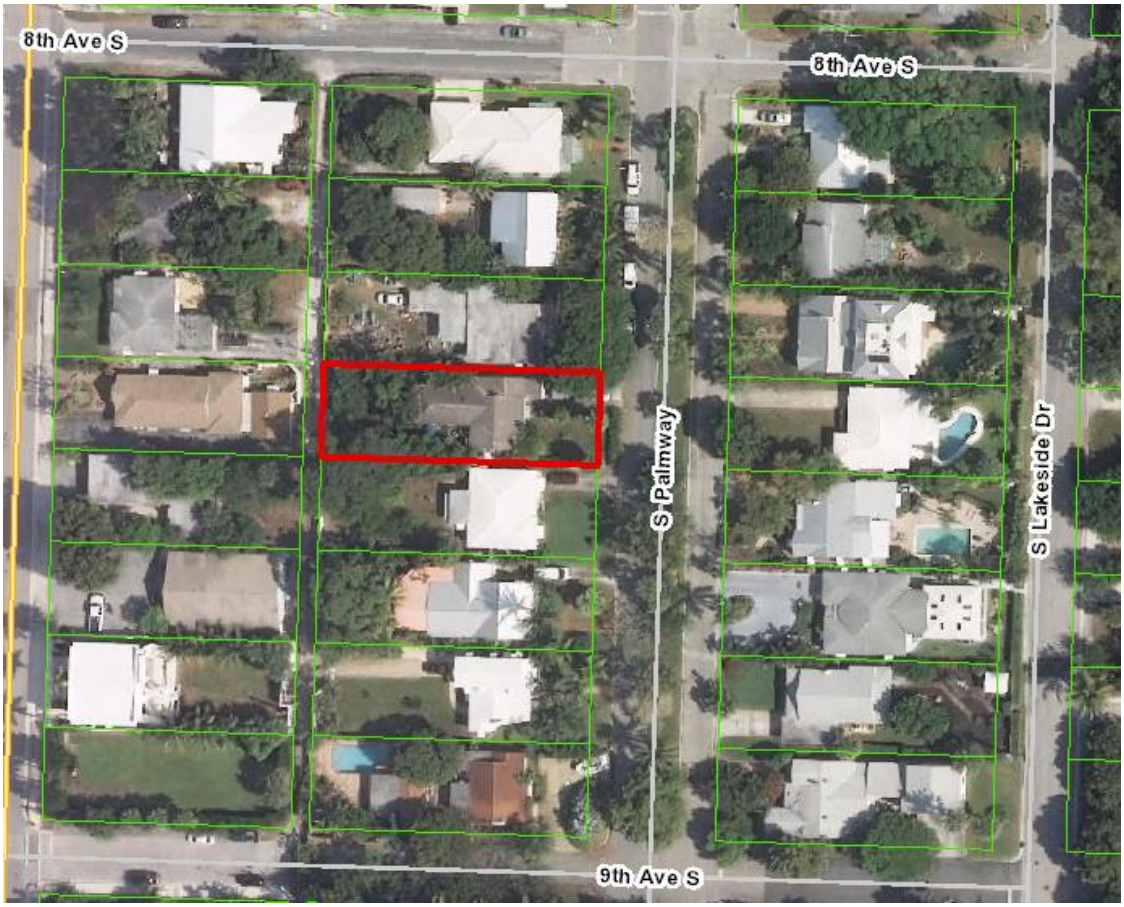

MEMORANDUM

DATE: May 4, 2016

TO: Chair and Members of the Historic Resources Preservation Board

FROM: Aimee N. Sunny, Preservation Planning Coordinator
Department of Community Sustainability

SUBJECT: **HRPB Project Number 16-00100079**: Consideration of a Certificate of Appropriateness (COA) for roof replacement to the subject property located at **817 S Palmway**, PCN# 38-43-44-27-01-022-0120. The subject building was constructed in 1940 and the property is a contributing resource within the South Palm Park Local Historic District.

HRPB Meeting Date: May 11, 2016

Per Section 23.5-4k(1) of the historic preservation ordinance, the Board shall use the following criteria in making a determination:

A. What is the effect of the proposed work on the landmark or the property upon which such work is to be done?
Response: It is the opinion of Staff that the proposed work on the property located at 817 S Palmway will have an adverse visual effect on the building.

B. What is the relationship between such work and other structures on the landmark site or other property in the historic district?
Response: The proposed work will have no direct physical effect on any surrounding properties within the surrounding South Palm Park Local Historic District. However, the project would have an adverse visual effect on the building itself and an indirect adverse effect on the district.

C. To what extent will the historic, architectural, or archaeological significance, architectural style, design, arrangement, texture, materials and color of the landmark or the property be affected?
Response: The project as proposed would have an adverse effect on the integrity of material and design of the building. The proposed roof replacement is not compatible with the architectural style and design of the structure.

D. Would denial of a certificate of appropriateness deprive the property owner of reasonable beneficial use of his property?
Response: The denial of this COA as submitted does not prevent the Applicant from proposing other alterations to the home, or re-roofing with an alternate recommended material.

E. Are the applicant's plans technically feasible and capable of being carried out within a reasonable time?
Response: Yes.

F. Do the plans satisfy the applicable portions of the general criteria contained in the United States Secretary of the Interior's Standards for Rehabilitation then in effect or as they may be revised from time to time? The current version of the Secretary's Guidelines provides as follows:

(1) A property shall be used for its historic purpose or be placed in a new use that requires minimal change to the defining characteristics of the building and its site and environment.
Response: No change to the use of the property is proposed.

(2) This historic character of the property shall be retained and preserved. The removal of historic materials or alteration of features and spaces that characterize a property shall be avoided.
Response: It is the opinion of Staff that the proposed metal roof material would alter the Frame Vernacular character of the structure by altering the strong horizontal lines of the existing asphalt shingle roof.

(3) Each property shall be recognized as a physical record of its time, place and use. Changes that create a false sense of historical development, such as adding conjectural features or architectural elements from other buildings, shall not be undertaken.
Response: Not applicable to this project.

(4) Most properties change over time; those changes that have acquired historic significance in their own right shall be retained and preserved.
Response: Not applicable to this project.

(5) Distinctive features, finishes and construction techniques or examples of craftsmanship that characterize a historic property shall be preserved.
Response: The roof is a distinctive feature of the structure, and the type of roof material used on the structure should be retained. The metal shingle is an example of the craftsmanship of the 1940's and was widely used in Frame Vernacular design. This is an important design feature, and should be preserved or replaced in kind.

(6) Deteriorated architectural features shall be repaired rather than replaced, wherever possible. In the event replacement is necessary, the new material should match the material being replaced in composition, design, color, texture, and other visual qualities.

Repair or replacement of missing architectural features should be based on accurate duplications of features, substantiated by historical, physical, or pictorial evidence rather than on conjectural designs or because the different architectural elements from other buildings or structures happen to be available for relocation.
Response: Not applicable to this project.

(7) Chemical or physical treatments, such as sandblasting, that cause damage to historic materials, shall not be used. The surface cleaning of structures, if appropriate, shall be undertaken using the gentlest means possible.
Response: Not applicable to this project.

(8) Significant archeological resources affected by a project shall be protected and preserved. If such resources must be disturbed, mitigation measures shall be undertaken.
Response: Not applicable to this project.

(9) New additions, exterior alterations or related new construction shall not destroy historic materials that characterize the property. The new construction shall be differentiated from the old and shall be compatible with the massing, size, scale and architectural features to protect the historic integrity of the property and its environment.

Response: The application is not proposing a new addition.

(10) New additions and adjacent or related new construction shall be undertaken in such manner that, if removed in the future, the essential form and integrity of the historic building and its environment would be unimpaired.
Response: Not applicable to this project.

G. What are the effects of the requested change on those elements or features of the structure which served as the basis for its designation and will the requested changes cause the least possible adverse effect on those elements or features?
Response: It is the opinion of Staff that the historic character of the property would be adversely affected by the proposed project as submitted by the Applicant, as outlined above. The proposal does not represent the least possible adverse effect.

Section 23.5-4k(2). Additional guidelines for alterations.

In approving or denying applications for certificates of appropriateness for alterations, the HRPB shall also consider the following additional guidelines:

A. Is every reasonable effort being made to provide a compatible use for a property that requires minimal alteration of the building, structure or site and its environment, or to use the property for its originally intended purpose?
Response: No change to the use of the property is proposed.

B. Are the distinguishing original qualities or character of a building, structure or site and its environment being destroyed? The removal or alteration of any historic material or distinctive architectural features shall be avoided whenever possible.
Response: It is the opinion of Staff that the historic character of the property would be adversely affected by the proposed project as submitted by the Applicant, as the original style of the building would be affected by the alterations proposed.

C. When a certificate of appropriateness is requested to replace windows or doors, the HRPB shall permit the property owner's original design when the HRPB's alternative design would result in an increase in cost of thirty (30) percent above the owner's original cost. The owner shall be required to demonstrate to the HRPB that:
(1) The work to be performed will conform to the original door and window openings of the structure; and
Response: Not applicable to this project.

(2) That the replacement windows or doors with less expensive materials will achieve a savings in excess of thirty (30) percent over historically compatible materials otherwise required by this code.
Response: Not applicable to this project.

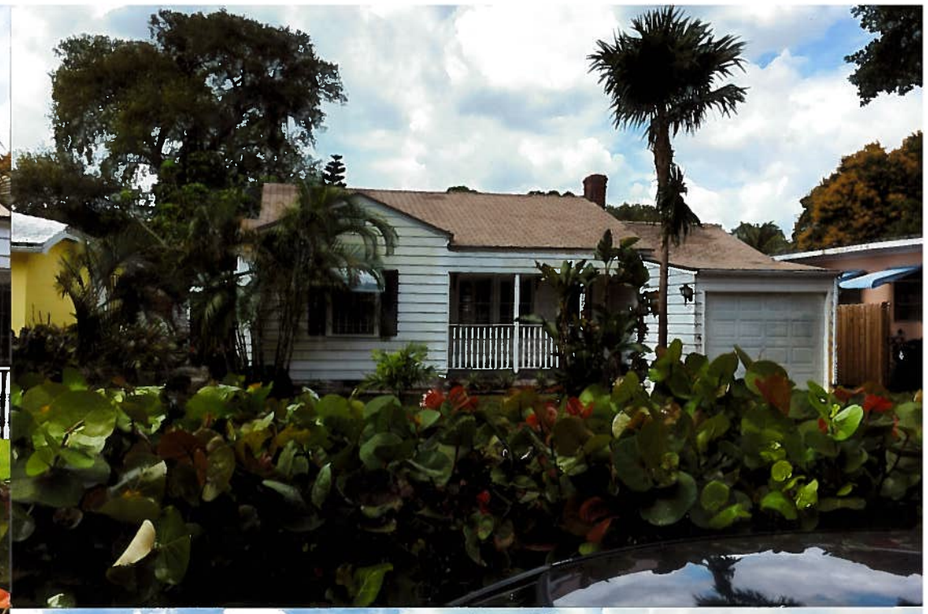

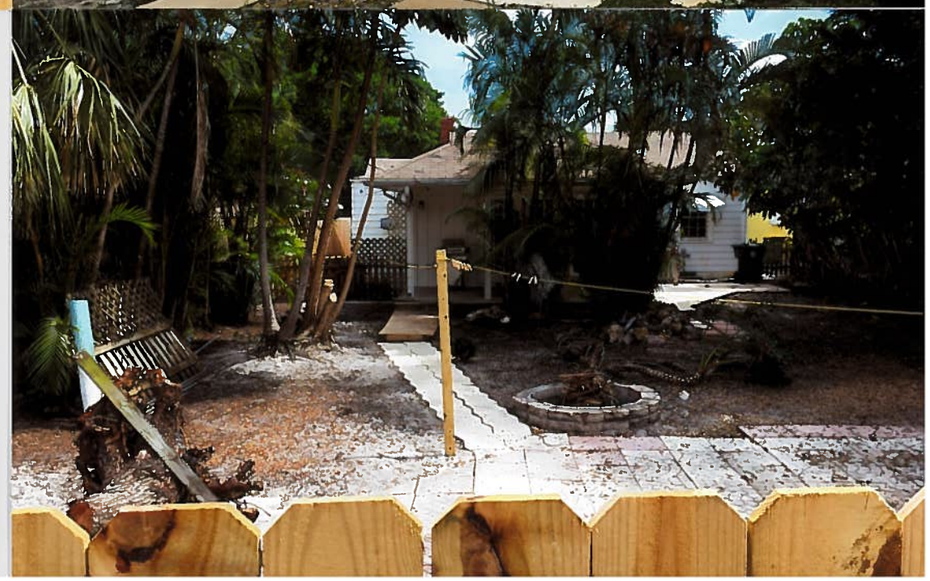

4/4/16

We would like to purchase a 5 v crimp metal roof for our home. We chose this material because we have found in research the 5 v crimp metal roof offers high solar reflectance and lasts 40 to 75 years compared to asphalt which lasts 20 to 25 years. When they install the metal roof a self adhered modified membrane is applied to the roof board which waterproofs (dries in) the house.

When my husband and I purchased our home in January we admired all the metal Roofs In the neighborhood and agreed this roof would add character to our cottage style home. We had no idea it would be a problem since three of our immediate neighbors had the same roof we want.

When we compared prices an asphalt roof is appoximatly $7,000, a 5 v metal crimp roof, $11,000, and metal shingles (a suggested option) is $19,000. We feel we are upgrading the look and quality of our home choosing the 5 v metal crimp, unfortunatly metal shingles exceeds our budget.

Thank You
Ann + Jim Maxwell

Florida Department of Business & Professional Regulation
License efficiently. Regulate fairly.

Product Approval
USER: Public User

FL #	FL11175-R2
Application Type	Revision
Code Version	2014
Application Status	Approved
Comments	
Archived	
Product Manufacturer	Southeastern Metals Mfg. Co.
Address/Phone/Email	11801 Industry Drive Jacksonville, FL 32218 (904) 696-4682 jhkelsey@semetals.com
Authorized Signature	Jim Horton jwhorton@semetals.com
Technical Representative	Jeremy Kelsey
Address/Phone/Email	11801 Industry Dr. Jacksonville, FL 32218 (904) 757-4200 Ext 4682 jhkelsey@semetals.com
Quality Assurance Representative	Jim Horton
Address/Phone/Email	11801 Industry Drive Jacksonville, FL 32218 jwhorton@semetals.com
Category	Roofing
Subcategory	Metal Roofing
Compliance Method	Evaluation Report from a Florida Registered Architect or a Licensed Florida Professional Engineer ✓ Evaluation Report - Hardcopy Received
Florida Engineer or Architect Name who developed the Evaluation Report	Zachary R. Priest
Florida License	PE-74021
Quality Assurance Entity	UL LLC
Quality Assurance Contract Expiration Date	12/31/2020
Validated By	Locke Bowden ✓ Validation Checklist - Hardcopy Received
Certificate of Independence	FL11175_R2_COI_Evaluation Report 2014 FBC SEM12001.1 Metal Roofing.pdf

Referenced Standard and Year (of Standard)

Standard	Year
TAS 125	2003

Equivalence of Product Standards Certified By

Sections from the Code

Product Approval Method	Method 1 Option D
Date Submitted	02/19/2015
Date Validated	02/21/2015
Date Pending FBC Approval	03/01/2015
Date Approved	04/15/2015

Summary of Products

FL #	Model, Number or Name	Description
11175.1	Non-Structural Metal Roofing	Fastened, snap lock, and mechanically seamed panels

Limits of Use **Approved for use in HVHZ:** No **Approved for use outside HVHZ:** Yes **Impact Resistant:** N/A **Design Pressure:** N/A **Other:** See evaluation for allowable pressures and limits of use	**Installation Instructions** FL11175_R2_II_Evaluation Report 2014 FBC SEM12001.1 Metal Roofing.pdf Verified By: Zachary R. Priest 74021 Created by Independent Third Party: Yes **Evaluation Reports** FL11175_R2_AE_Evaluation Report 2014 FBC SEM12001.1 Metal Roofing.pdf Created by Independent Third Party: Yes

Contact Us :: 1940 North Monroe Street, Tallahassee FL 32399 Phone: 850-487-1824

The State of Florida is an AA/EEO employer. Copyright 2007-2013 State of Florida. :: Privacy Statement :: Accessibility Statement :: Refund Statement

Under Florida law, email addresses are public records. If you do not want your e-mail address released in response to a public-records request, do not send electronic mail to this entity. Instead, contact the office by phone or by traditional mail. If you have any questions, please contact 850.487.1395. *Pursuant to Section 455.275(1), Florida Statutes, effective October 1, 2012, licensees licensed under Chapter 455, F.S. must provide the Department with an email address if they have one. The emails provided may be used for official communication with the licensee. However email addresses are public record. If you do not wish to supply a personal address, please provide the Department with an email address which can be made available to the public. To determine if you are a licensee under Chapter 455, F.S., please click here .

Product Approval Accepts:

eCheck

Credit Card SAFE

CREEK
TECHNICAL SERVICES, LLC

Certificate of Authorization No. 29824
17520 Edinburgh Dr
Tampa, FL 33647
(813) 480-3421

EVALUATION REPORT

2014 FLORIDA BUILDING CODE

Report Issued February 18, 2015

Manufacturer: Southeastern Metals Mfg Co., Inc.
11801 Industry Drive
Jacksonville, FL 32218
(800) 874-0335

Manufacturing Plants: Jacksonville, FL

Quality Assurance: Underwriters Laboratories Inc. (QUA1743)

PRODUCT DESCRIPTION

Non-Structural Metal Roofing

Profile: SM-RIB
Description: min. 29 ga.; F_y = 80 ksi; 3/4" rib; 36" coverage; fastened panel

Profile: 266A 5V Crimp
Description: min. ~~29 ga.; F_y~~ = 50 ksi; 7/16" rib; 24" coverage; fastened panel

Profile: PBR
Description: min. 26 ga.; F_y = 80 ksi; 1-1/8" rib; 36" coverage; fastened panel

Profile: Corrugated
Description: min. 26 ga.; F_y = 33 ksi; 1/2" corrugation; 24" coverage; fastened panel

Profile: Sem-Lok
Description: min. 26 ga.; F_y = 50 ksi; 1" rib; 16" coverage; snap lock standing seam panel

Profile: Sem-Lok
Description: .016 ASTM B 370 copper clad Type 430 stainless steel (Copper XT™); 1" rib; 16" coverage; snap lock standing seam panel

Profile: Sem-Lok
Description: .032 aluminum 3105 H-24; 1" rib; 16" coverage; snap lock standing seam panel

Profile: Verti-Lok
Description: min. 24 ga.; F_y = 50 ksi; 1-3/4" rib; 16" coverage; snap lock standing seam panel

Profile: Rock-Lok
Description: min. 24 ga.; F_y = 50 ksi; 2" rib; 16" coverage; mechanically seamed standing seam panel

SCOPE

Category: Roofing
Subcategory: Metal Roofing
Code Sections: 1504.3.2
Properties: Wind Resistance

This evaluation report is provided for State of Florida product approval under Rule 61G20-3. The manufacturer shall notify CREEK Technical Services, LLC of any product changes or quality assurance changes throughout the duration for which this report is valid. This evaluation report does not express nor imply warranty, installation, recommended use, or other product attributes that are not specifically addressed herein.

29 ga. 5V Crimp	
Slope:	3:12 or greater
Deck:	Min. 15/32" plywood for new and existing construction; Designed per FBC; Min. attachment is 2-1/2", 8d ring shank nails 6" o.c. at perimeter and field at max. 24" span
Underlayment:	As required in accordance with 1507.4.5
Attachment:	#9-15 HWH wood screw with sealing washers installed as shown below with min. 3/8" deck penetration
Allowable Pressure:	**-71 psf** when fastened max. 16" o.c. as shown below *Pressure calculated using 2:1 margin of safety per 1504.9*

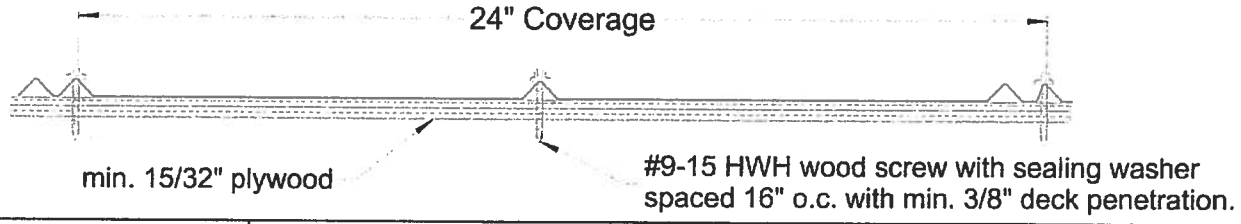

Lap Detail:	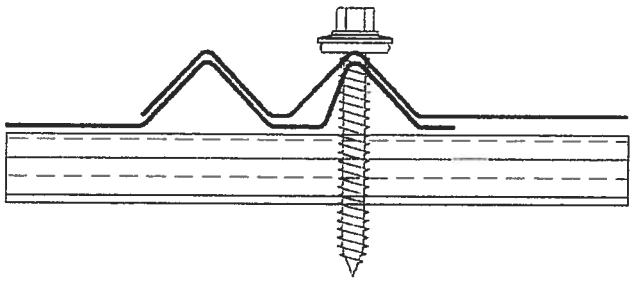
Allowable Pressure:	**-93.5 psf** when fastened max. 12" o.c. as shown below *Pressure calculated using 2:1 margin of safety per 1504.9*

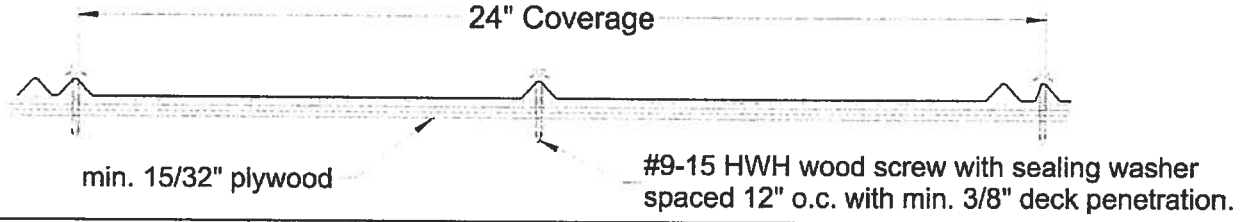

Lap Detail:	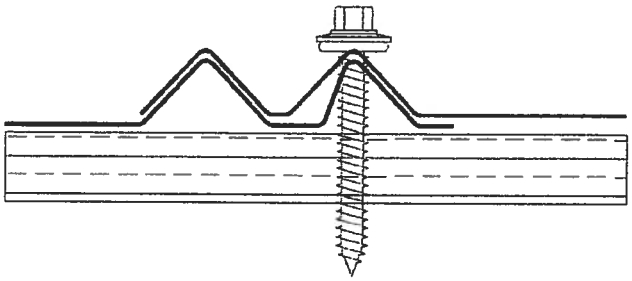

This evaluation report is provided for State of Florida product approval under Rule 61G20-3. The manufacturer shall notify CREEK Technical Services, LLC of any product changes or quality assurance changes throughout the duration for which this report is valid. This evaluation report does not express nor imply warranty, installation, recommended use, or other product attributes that are not specifically addressed herein.

REFERENCES

Entity	Report No.	Standard	Year
Certified Testing Laboratories (TST1577)	CTLA 110R-1	TAS 125	2003
Certified Testing Laboratories (TST1577)	CTLA 111R	TAS 125	2003
Force Engineering and Testing (TST5328)	188-0330T-06D, E	TAS 125	2003
Force Engineering and Testing (TST5328)	188-0331T-06D, E	TAS 125	2003
Force Engineering and Testing (TST5328)	188-0332T-06A, B	TAS 125	2003
Hurricane Test Laboratory (TST1527)	0041-1019-07	TAS 125	2003
Hurricane Test Laboratory (TST1527)	0041-0812-07	TAS 125	2003
Hurricane Test Laboratory (TST1527)	0041-00202-10	TAS 125	2003
PRI Construction Materials Technologies (TST5878)	SEM-013-02-02.04	TAS 125	2003
PRI Construction Materials Technologies (TST5878)	SEM-016-02-01	TAS 125	2003
PRI Construction Materials Technologies (TST5878)	SEM-018-02-01	TAS 125	2003

LIMITATIONS

1. This evaluation is not for use in the HVHZ.
2. Fire classification is not within the scope of this evaluation Design wind loads shall be determined in accordance with FBC Section 1609.
3. The roof deck and the roof deck attachment shall be designed by others to meet the minimum design loads established for components and cladding and in accordance with FBC requirements.
4. The maximum fastener spacing for the approved assemblies shall not be exceeded.
5. Reroofing shall be conducted in accordance with FBC Section 1510.
6. Panel materials shall comply with FBC Section 1507.4.3
7. Fasteners shall comply with FBC Section 1507.4.4
8. Installation of the evaluated products shall comply with this report, the FBC and the manufacturer's published application instructions. Where discrepancies exist between these sources, the more restrictive and FBC compliant installation detail shall prevail.
9. All products listed in this report shall be manufactured under a quality assurance program in compliance with Rule 61G20-3.

COMPLIANCE STATEMENT

The products and assemblies evaluated herein by Zachary R. Priest, P.E. have demonstrated compliance with the 2014 Florida Building Code.

ZACHARY R. PRIEST
LICENSE
No 74021
STATE OF
FLORIDA
PROFESSIONAL ENGINEER

2015.02.18 15:59:52 -05'00'

Zachary R. Priest, P.E.
Florida Registration No. 74021
Organization No. ANE9641

CERTIFICATION OF INDEPENDENCE

CREEK Technical Services, LLC does not have, nor will it acquire, a financial interest in any company manufacturing or distributing products under this evaluation.

CREEK Technical Services, LLC is not owned, operated, or controlled by any company manufacturing or distributing products under this evaluation.

This evaluation report is provided for State of Florida product approval under Rule 61G20-3. The manufacturer shall notify CREEK Technical Services, LLC of any product changes or quality assurance changes throughout the duration for which this report is valid. This evaluation report does not express nor imply warranty, installation, recommended use, or other product attributes that are not specifically addressed herein.

Zachary R. Priest, P.E. does not have, now will acquire, a financial interest in any company manufacturing or distributing products under this evaluation.

Zachary R. Priest, P.E. does not have, now will acquire, a financial interest in any other entity involved in the approval process of the product.

END OF REPORT

This evaluation report is provided for State of Florida product approval under Rule 61G20-3. The manufacturer shall notify CREEK Technical Services, LLC of any product changes or quality assurance changes throughout the duration for which this report is valid. This evaluation report does not express nor imply warranty, installation, recommended use, or other product attributes that are not specifically addressed herein.

Aimee Sunny

From: Cureton, Kenneth H. <Kenneth.Cureton@dos.myflorida.com>
Sent: Friday, February 05, 2016 4:17 PM
To: Aimee Sunny
Subject: RE: Lake Worth - Roof Questions

Aimee

To follow up on our conversation this morning, the State Historic Preservation Office follows the National Park Service / Secretary of the Interior's Standards for Rehabilitation and Guidelines for the Rehabilitation of Historic Buildings explicitly when reviewing projects under our purview, along with the supplemental guidance NPS provides. Such additional NPS guidance can be found in their preservation topics index here: http://www.nps.gov/tps/how-to-preserve/by-topic.htm

These standards are incorporated by reference in Section 1203 and Appendix B of the Florida Building Code – Existing Building, 5th Edition as code mandated requirements for work on buildings that meet the definition of a **Historic Building** in Section 1202 therein. Therefore, the argument can be made that if the Standards are not followed, the work is not in compliance with the building code.

In all four cases you have presented, the first consideration would be replacement of the historic materials based on pictorial evidence, which you have provided. The NPS Guidelines allows that when an in-kind replacement of a historic roof "…is not technically or economically feasible, then a *compatible* substitute material may be considered." The key here is compatibility. If in-kind replacement is not feasible, our opinion of a *compatible* roof for these particular projects is the actual roof material would be subordinate to the color and pattern that the historic roof provided. The low slope of the roof pitch in all four examples would allow for replacement with an architectural grade shingle, provided it was in the light grey color range the metal shingles originally presented. We feel that a white shingle would not be an appropriate color.

We would strongly advise against sheet metal products, since the strong vertical lines and shadows of such products would adversely impact the historic status of the building, as it would completely change the character of the roof and have no historical basis.

We would also strongly advise that if a lack of selection of metal shingles with Florida Product Approval is the reason for higher costs, your authority having jurisdiction should contact the Florida Building Commission to investigate local product approval options.

Hope this opinion helps clarify how we would view such issues on a State level.

Thanks for your inquiry and best of luck with your projects.

Kenneth H. Cureton, R.A., NCARB
Senior Architect, Bureau of Historic Preservation | Division of Historical Resources | Florida Department of State | 500 South Bronough Street | Tallahassee, Florida 32399 | 850.245.6343 | 1.800.847.7278 | Fax: 850.245.6439 | Kenneth.Cureton@DOS.MyFlorida.com | dos.myflorida.com/historical

FLORIDA DEPARTMENT OF STATE
DIVISION OF
Historical Resources

From: Aimee Sunny [mailto:asunny@LakeWorth.org]
Sent: Friday, February 05, 2016 12:03 PM
To: Cureton, Kenneth H.
Cc: Hilburn, Richard L.
Subject: Lake Worth - Roof Questions

Mr. Cureton,

Thank you very much for your time and consideration this morning regarding the projects I mentioned in Lake Worth. I very much appreciate your analysis and discussion on the various roof types we discussed, as they relate to historic properties.

As I mentioned, I have attached a few photos of several cases that will be heard before the HRPB next Wednesday, February 10th, and I welcome your input:

520 N Palmway – Contributing, c.1940, Frame Vernacular, with original flat metal shingles. The request is for Southeastern Metals, SEM-Lok Snap Standing Seam 16" wide Aluminum panels.

612 N Palmway – Contributing, c.1940, Frame Vernacular, with original flat metal shingles. The request is for Gulf Coast Supply, Gulf-Lok 16" Wide Roof Panels, 26 gauge steel.

726 N M St – Non-contributing, c. 1940, Frame Vernacular, with original flat metal shingle that have been coated several times. The request is for CertainTeed Landmark dimensional asphalt shingles.

731 N M St – Surveyed as Contributing, but has lost many features over time. 1946, Masonry Vernacular. The original construction drawings called for rolled slate roofing, the roof was changed to flat white concrete tile in 1955, and later changed to 3-tab asphalt shingles in the 1990's. The request is now to change to Gulf Coast Supply, Gulf-Lok 16" Wide Aluminum Roof Panels, in a white color.

I look forward to receiving your suggestions, and to working with you in the future.

Best wishes,

Aimee N. Sunny
Preservation Planning Coordinator
City of Lake Worth
1900 Second Avenue North

Lake Worth, Florida 33461
561-586-1690
asunny@lakeworth.org

The Department of State is committed to excellence.
Please take our Customer Satisfaction Survey.

4 PRESERVATION BRIEFS

HABS

Roofing for Historic Buildings

Sarah M. Sweetser

U.S. Department of the Interior
National Park Service
Cultural Resources

Heritage Preservation Services

Significance of the Roof

A weather-tight roof is basic in the preservation of a structure, regardless of its age, size, or design. In the system that allows a building to work as a shelter, the roof sheds the rain, shades from the sun, and buffers the weather.

During some periods in the history of architecture, the roof imparts much of the architectural character. It defines the style and contributes to the building's aesthetics. The hipped roofs of Georgian architecture, the turrets of Queen Anne, the Mansard roofs, and the graceful slopes of the Shingle Style and Bungalow designs are examples of the use of roofing as a major design feature.

But no matter how decorative the patterning or how compelling the form, the roof is a highly vulnerable element of a shelter that will inevitable fail. A poor roof will permit the accelerated deterioration of historic building materials—masonry, wood, plaster, paint—and will cause general disintegration of the basic structure. Furthermore, there is an urgency involved in repairing a leaky roof since such repair costs will quickly become prohibitive. Although such action is desirable as soon as a failure is discovered, temporary patching methods should be carefully chosen to prevent inadvertent damage to sound or historic roofing materials and related features. Before any repair work is performed, the historic value of the materials used on the roof should be understood. Then a complete internal and external inspection of the roof should be planned to determine all the causes of failure and to identify the alternatives for repair or replacement of the roofing.

Historic Roofing Materials in America

Clay Tile: European settlers used clay tile for roofing as early as the mid-17th century; many pantiles (S-curved tiles), as well as flat roofing tiles, were used in Jamestown, Virginia. In some cities such as New York and Boston, clay was popularly used as a precaution against such fire as those that engulfed London in 1666 and scorched Boston in 1679.

Tiles roofs found in the mid-18th century Moravian settlements in Pennsylvania closely resembled those found in Germany. Typically, the tiles were 14–15″ long, 6–7″ wide with a curved butt. A lug on the back allowed the tiles to hang on the lathing without nails or pegs. The tile surface was usually scored with finger marks to promote drainage. In the Southwest, the tile roofs of the Spanish missionaries (mission tiles) were first manufactured (ca. 1780) at the Mission San Antonio de Padua in California. These semicircular tiles were made by molding clay over sections of logs, and they were generally 22″ long and tapered in width.

Repairs on this pantile roof were made with new tiles held in place with metal hangers. (Main Building, Ellis Island, New York)

The plain or flat rectangular tiles most commonly used from the 17th through the beginning of the 19th century measured about 10″ by 6″ by ½″, and had two holes at one end for a nail or peg fastener. Sometimes mortar was applied between the courses to secure the tiles in a heavy wind.

In the mid-19th century, tile roofs were often replaced by sheet-metal roofs, which were lighter and easier to install and maintain. However, by the turn of the century, the Romanesque Revival and Mission style buildings created a new demand and popularity for this picturesque roofing material.

Slate: Another practice settlers brought to the New World was slate roofing. Evidence of roofing slates have been found also among the ruins of mid-17th-century Jamestown. But because of the cost and the time required to obtain the material, which was mostly imported from Wales, the use of slate was initially limited. Even in Philadelphia (the second largest city in the English-speaking world at the time of the Revolution) slates were so rare that "The Slate Roof House" distinctly referred to William Penn's home built late in the 1600s. Sources of native slate were known to exist along the eastern seaboard from Maine to Virginia, but difficulties in inland transportation limited its availability to the cities, and contributed to its expense. Welsh slate continued to be imported until the development of canals and railroads in the mid-19th century made American slate more accessible and economical.

Slate was popular for its durability, fireproof qualities, and

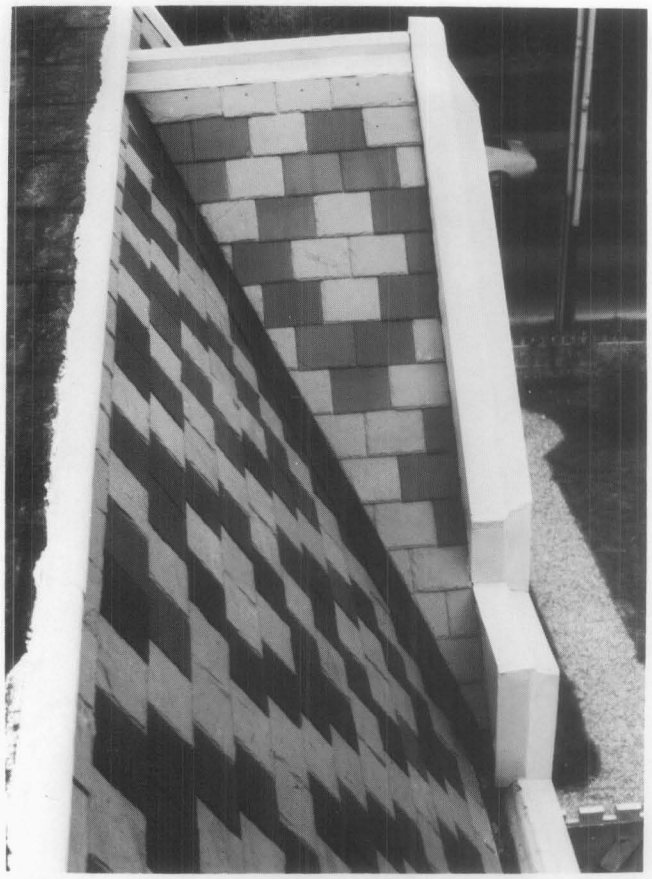

The Victorians loved to used different colored slates to create decorative patterns on their roofs, an effect which cannot be easily duplicated by substitute materials. Before any repair work on a roof such as this, the slate sizes, colors, and position of the patterning should be carefully recorded to assure proper replacement. (Ebenezer Maxwell Mansion, Philadelphia, Pennsylvania, photo courtesy of William D. Hershey)

Replacement of particular historic details is important to the individual historic character of a roof, such as the treatment at the eaves of this rounded butt wood shingle roof. Also note that the surface of the roof was carefully sloped to drain water away from the side of the dormer. In the restoration, this function was augmented with the addition of carefully concealed modern metal flashing. (Mount Vernon, Virginia)

Galvanized sheet-metal shingles imitating the appearance of pantiles remained popular from the second half of the 19th century into the 20th century. (Episcopal Church, now the Jerome Historical Society Building, Jerome, Arizona, 1927)

aesthetic potential. Because slate was available in different colors (red, green, purple, and blue-gray), it was an effective material for decorative patterns on many 19th-century roofs (Gothic and Mansard styles). Slate continued to be used well into the 20th century, notably on many Tudor revival style buildings of the 1920s.

Shingles: Wood shingles were popular throughout the country in all periods of building history. The size and shape of the shingles as well as the detailing of the shingle roof differed according to regional craft practices. People within particular regions developed preferences for the local species of wood that most suited their purposes. In New England and the Delaware Valley, white pine was frequently used: in the South, cypress and oak; in the far west, red cedar or redwood. Sometimes a protective coating was applied to increase the durability of the shingle such as a mixture of brick dust and fish oil, or a paint made of red iron oxide and linseed oil.

Commonly in urban areas, wooden roofs were replaced with more fire resistant materials, but in rural areas this was not a major concern. On many Victorian country houses, the practice of wood shingling survived the technological advances of metal roofing in the 19th century, and near the turn of the century enjoyed a full revival in its namesake, the Shingle Style. Colonial revival and the Bungalow styles in the 20th century assured wood shingles a place as one of the most fashionable, domestic roofing materials.

Metal: Metal roofing in America is principally a 19th-century phenomenon. Before then the only metals commonly used were lead and copper. For example, a lead roof covered "Rosewell," one of the grandest mansions in 18th-century Virginia. But more often, lead was used for protective flashing. Lead, as well as copper, covered roof surfaces where wood, tile, or slate shingles were inappropriate because of the roof's pitch or shape.

Copper with standing seams covered some of the more notable early American roofs including that of Christ Church (1727–1744) in Philadelphia. Flat-seamed copper was used on many domes and cupolas. The copper sheets were imported from England until the end of the 18th century when facilities for rolling sheet metal were developed in America.

Sheet iron was first known to have been manufactured here by the Revolutionary War financier, Robert Morris, who had a rolling mill near Trenton, New Jersey. At his mill Morris produced the roof of his own Philadelphia mansion, which he started in 1794. The architect Benjamin H. Latrobe used sheet iron to replace the roof on Princeton's "Nassau Hall," which had been gutted by fire in 1802.

The method for corrugating iron was originally patented in England in 1829. Corrugating stiffened the sheets, and allowed greater span over a lighter framework, as well as reduced installation time and labor. In 1834 the American architect William Strickland proposed corrugated iron to cover his design for the market place in Philadelphia.

Galvanizing with zinc to protect the base metal from rust was developed in France in 1837. By the 1850s the material was used on post offices and customhouses, as well as on train sheds and factories. In 1857 one of the first metal roofs in the

Repeated repair with asphalt, which cracks as it hardens, has created a blistered surface on this sheet-metal roof and built-in gutter, which will retain water. Repairs could be made by carefully heating and scraping the surface clean, repairing the holes in the metal with a flexible mastic compound or a metal patch, and coating the surface with a fibre paint. (Roane County Courthouse, Kingston, Tennessee, photo courtesy of Building Conservation Technology, Inc.)

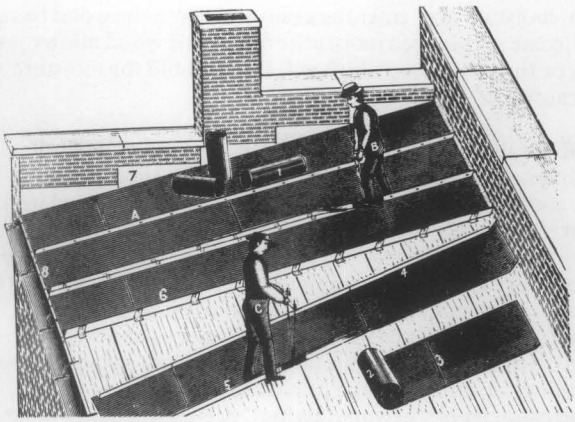

A Chicago firm's catalog dated 1896 illustrates a method of unrolling, turning the edges, and finishing the standing seam on a metal roof.

Tin shingles, commonly embossed to imitate wood or tile, or with a decorative design, were popular as an inexpensive, textured roofing material. These shingles $8^3/_8$ inch by $12^1/_2$ inch on the exposed surface) were designed with interlocking edges, but they have been repaired by surface nailing, which may cause future leakage. (Ballard House, Yorktown, Virgina, photo by Gordie Whittington, National Park Service)

South was installed on the U.S. Mint in New Orleans. The Mint was thereby "fireproofed" with a 20-gauge galvanized, corrugated iron roof on iron trusses.

Tin-plate iron, commonly called "tin roofing," was used extensively in Canada in the 18th century, but it was not as common in the United States until later. Thomas Jefferson was an early advocate of tin roofing, and he installed a standing-seam tin roof on "Monticello" (ca. 1770–1802). The Arch Street Meetinghouse (1804) in Philadelphia had tin shingles laid in a herringbone pattern on a "piazza" roof.

However, once rolling mills were established in this country, the low cost, light weight, and low maintenance of tin plate made it the most common roofing material. Embossed tin shingles, whose surfaces created interesting patterns, were popular throughout the country in the late 19th century. Tin roofs were kept well-painted, usually red; or, as the architect A. J. Davis suggested, in a color to imitate the green patina of copper.

Terne plate differed from tin plate in that the iron was dipped in an alloy of lead and tin, giving it a duller finish. Historic, as well as modern, documentation often confuses the two, so much that it is difficult to determine how often actual "terne" was used.

Zinc came into use in the 1820s, at the same time tin plate was becoming popular. Although a less expensive substitute for lead, its advantages were controversial, and it was never widely used in this country.

Other Materials: Asphalt shingles and roll roofing were used in the 1890s. Many roofs of asbestos, aluminum, stainless steel, galvinized steel, and lead-coated copper may soon have historic values as well. Awareness of these and other traditions of roofing materials and their detailing will contribute to more sensitive preservation treatments.

Locating the Problem

Failures of Surface Materials

When trouble occurs, it is important to contact a professional, either an architect, a reputable roofing contractor, or a craftsman familiar with the inherent characteristics of the particular historic roofing system involved. These professionals may be able to advise on immediate patching procedures and help plan more permanent repairs. A thorough examination of the roof should start with an appraisal of the existing condition and quality of the roofing material itself. Particular attention should be given to any southern slope because year-round exposure to direct sun may cause it to break down first.

Wood: Some historic roofing materials have limited life expectancies because of normal organic decay and "wear." For example, the flat surfaces of wood shingles erode from exposure to rain and ultraviolet rays. Some species are more hardy than others, and heartwood, for example, is stronger and more durable than sapwood.

Ideally, shingles are split with the grain perpendicular to

the surface. This is because if shingles are sawn across the grain, moisture may enter the grain and cause the wood to deteriorate. Prolonged moisture on or in the wood allows moss or fungi to grow, which will further hold the moisture and cause rot.

Metal: Of the inorganic roofing materials used on historic buildings, the most common are perhaps the sheet metals: lead, copper, zinc, tin plate, terne plate, and galvanized iron. In varying degrees each of these sheet metals are likely to deteriorate from chemical action by pitting or streaking. This can be caused by airborn pollutants; acid rainwater; acids from lichen or moss; alkalis found in lime mortars or portland cement, which might be on adjoining features and washes down on the roof surface; or tannic acids from adjacent wood sheathings or shingles made of red cedar or oak.

Corrosion from "galvanic action" occurs when dissimilar metals, such as copper and iron, are used in direct contact. Corrosion may also occur even though the metals are physically separated; one of the metals will react chemically against the other in the presence of an electrolyte such as rainwater. In roofing, this situation might occur when either a copper roof is decorated with iron cresting, or when steel nails are used in copper sheets. In some instances the corrosion can be prevented by inserting a plastic insulator between the dissimilar materials. Ideally, the fasteners should be a metal sympathetic to those involved.

Iron rusts unless it is well-painted or plated. Historically this problem was avoided by use of tin plating or galvinizing. But this method is durable only as long as the coating remains intact. Once the plating is worn or damaged, the exposed iron will rust. Therefore, any iron-based roofing material needs to be undercoated, and its surface needs to be kept well-painted to prevent corrosion.

One cause of sheet metal deterioration is fatigue. Depending upon the size and the gauge of the metal sheets, wear and metal failure can occur at the joints or at any protrusions in the sheathing as a result from the metal's alternating movement to thermal changes. Lead will tear because of "creep," or the gravitational stress that causes the material to move down the roof slope.

Slate: Perhaps the most durable roofing materials are slate and tile. Seemingly indestructable, both vary in quality. Some slates are hard and tough without being brittle. Soft slates are more subject to erosion and to attack by airborne and rainwater chemicals, which cause the slates to wear at nail holes, to delaminate, or to break. In winter, slate is very susceptible to breakage by ice, or ice dams.

Tile: Tiles will weather well, but tend to crack or break if hit, as by tree branches, or if they are walked on improperly. Like slates, tiles cannot support much weight. Low quality tiles that have been insufficiently fired during manufacture, will craze and spall under the effects of freeze and thaw cycles on their porous surfaces.

Failures of Support Systems

Once the condition of the roofing material has been determined, the related features and support systems should be examined on the exterior and on the interior of the roof. The gutters and downspouts need periodic cleaning and maintenance since a variety of debris fill them, causing water to back up and seep under roofing units. Water will eventually cause fasteners, sheathing, and roofing structure to deteriorate. During winter, the daily freeze-thaw cycles can cause ice floes to develop under the roof surface. The pressure from these ice floes will dislodge the roofing material, especially slates, shingles, or tiles. Moreover, the buildup of ice dams above the gutters can trap enough moisture to rot the sheathing or the structural members.

Many large public buildings have built-in gutters set within the perimeter of the roof. The downspouts for these gutters may run within the walls of the building, or drainage may be through the roof surface or through a parapet to exterior downspouts. These systems can be effective if properly maintained; however, if the roof slope is inadequate for good runoff, or if the traps are allowed to clog, rainwater will form pools on the roof surface. Interior downspouts can collect debris and thus back up, perhaps leaking water into the surrounding walls. Exterior downspouts may fill with water, which in cold weather may freeze and crack the pipes. Conduits from the built-in gutter to the exterior downspout may also leak water into the surrounding roof structure or walls.

Failure of the flashing system is usually a major cause of roof deterioration. Flashing should be carefully inspected for failure caused by either poor workmanship, thermal stress, or metal deterioration (both of flashing material itself and of the fasteners). With many roofing materials, the replacement of flashing on an existing roof is a major operation, which may require taking up large sections of the roof surface. Therefore, the installation of top quality flashing material on

This detail shows slate delamination caused by a combination of weathering and pollution. In addition, the slates have eroded around the repair nails, incorrectly placed in the exposed surface of the slates. (Lower Pontalba Building, New Orleans, photo courtesy of Building Conservation Technology, Inc.)

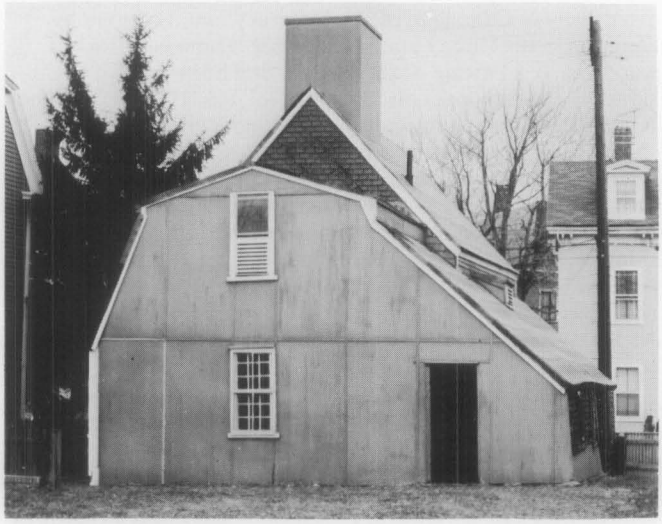

Temporary stabilization or "mothballing" with materials such as plywood and building paper can protect the roof of a project until it can be properly repaired or replaced. (Narbonne House, Salem, Massachusetts)

These two views of the same house demonstrate how the use of a substitute material can drastically affect the overall character of a structure. The textural interest of the original tile roof was lost with the use of asphalt shingles. Recent preservation efforts are replacing the tile roof. (Frank House, Kearney, Nebraska, photo courtesy of the Nebraska State Historical Society, Lincoln, Nebraska)

a new or replaced roof should be a primary consideration. *Remember, some roofing and flashing materials are not compatible.*

Roof fasteners and clips should also be made of a material compatible with all other materials used, or coated to prevent rust. For example, the tannic acid in oak will corrode iron nails. Some roofs such as slate and sheet metals may fail if nailed too rigidly.

If the roof structure appears sound and nothing indicates recent movement, the area to be examined most closely is the roof substrate—the sheathing or the battens. The danger spots would be near the roof plates, under any exterior patches, at the intersections of the roof planes, or at vertical surfaces such as dormers. Water penetration, indicating a breach in the roofing surface or flashing, should be readily apparent, usually as a damp spot or stain. Probing with a small pen knife may reveal any rot which may indicate previously undetected damage to the roofing membrane. Insect infestation evident by small exit holes and frass (a sawdust-like debris) should also be noted. Condensation on the underside of the roofing is undesirable and indicates improper ventilation. Moisture will have an adverse effect on any roofing material; a good roof stays dry inside and out.

Repair or Replace

Understanding potential weaknesses of roofing material also requires knowledge of repair difficulties. Individual slates can be replaced normally without major disruption to the rest of the roof, but replacing flashing on a slate roof can require substantial removal of surrounding slates. If it is the substrate or a support material that has deteriorated, many surface materials such as slate or tile can be reused if handled carefully during the repair. Such problems should be evaluated at the outset of any project to determine if the roof can be effectively patched, or if it should be completely replaced.

Will the repairs be effective? Maintenance costs tend to multiply once trouble starts. As the cost of labor escalates, repeated repairs could soon equal the cost of a new roof.

The more durable the surface is initially, the easier it will be to maintain. Some roofing materials such as slate are expensive to install, but if top quality slate and flashing are used, it will last 40–60 years with minimal maintenance. Although the installation cost of the roof will be high, low maintenance needs will make the lifetime cost of the roof less expensive.

Historical Research

In a restoration project, research of documents and physical investigation of the building usually will establish the roof's history. Documentary research should include any original plans or building specifications, early insurance surveys, newspaper descriptions, or the personal papers and files of people who owned or were involved in the history of the building. Old photographs of the building might provide evidence of missing details.

Along with a thorough understanding of any written history of the building, a physical investigation of the roofing and its structure may reveal information about the roof's construction history. Starting with an overall impression of the structure, are there any changes in the roof slope, its configuration, or roofing materials? Perhaps there are obvious patches or changes in patterning of exterior brickwork where a gable roof was changed to a gambrel, or where a whole upper story was added. Perhaps there are obvious stylistic changes in the roof line, dormers, or ornamentation. These observations could help one understand any important alteration, and could help establish the direction of further investigation.

Because most roofs are physically out of the range of careful scrutiny, the "principle of least effort" has probably limited the extent and quality of previous patching or replacing, and usually considerable evidence of an earlier roof surface remains. Sometimes the older roof will be found as an underlayment of the current exposed roof. Original roofing may still be intact in awkward places under later features on a roof. Often if there is any unfinished attic space, remnants of roofing may have been dropped and left when the roof was being built or repaired. If the configuration of the roof has been changed, some of the original material might still be in place under the existing roof. Sometimes whole sections of the roof and roof framing will have been left intact under the higher roof. The profile and/or flashing of the earlier roof may be apparent on the interior of the walls at the level of the alteration. If the sheathing or lathing appears to have survived changes in the roofing surface, they may contain evidence of the roofing systems. These may appear either as dirt marks, which provide "shadows" of a roofing material, or as nails broken or driven down into the wood, rather than pulled out during previous alterations or repairs. Wooden headers in the roof framing may indicate that earlier chimneys or skylights have been removed. Any metal ornamentation that might have existed may be indicated by anchors or unusual markings along the ridge or at other edges of the roof. This primary

evidence is essential for a full understanding of the roof's history.

Caution should be taken in dating early "fabric" on the evidence of a single item, as recycling of materials is not a mid-20th-century innovation. Carpenters have been reusing materials, sheathing, and framing members in the interest of economy for centuries. Therefore, any analysis of the materials found, such as nails or sawmarks on the wood, requires an accurate knowledge of the history of local building practices before any final conclusion can be accurately reached. It is helpful to establish a sequence of construction history for the roof and roofing materials; any historic fabric or pertinent evidence in the roof should be photographed, measured, and recorded for future reference.

During the repair work, useful evidence might unexpectedly appear. It is essential that records be kept of any type of work on a historic building, before, during, and after the project. Photographs are generally the easiest and fastest method, and should include overall views and details at the gutters, flashing, dormers, chimneys, valleys, ridges, and eaves. All photographs should be immediately labeled to insure accurate identification at a later date. Any patterning or design on the roofing deserves particular attention. For example, slate roofs are often decorative and have subtle changes in size, color, and texture, such as a gradually decreasing coursing length from the eave to the peak. If not carefully noted before a project begins, there may be problems in replacing the surface. The standard reference for this phase of the work is *Recording Historic Buildings,* compiled by Harley J. McKee for the Historic American Buildings Survey, National Park Service, Washington, D.C., 1970.

Replacing the Historic Roofing Material

Professional advice will be needed to assess the various aspects of replacing a historic roof. With some exceptions, most historic roofing materials are available today. If not, an architect or preservation group who has previously worked with the same type material may be able to recommend suppliers. Special roofing materials, such as tile or embossed metal shingles, can be produced by manufacturers of related products that are commonly used elsewhere, either on the exterior or interior of a structure. With some creative thinking and research, the historic materials usually can be found.

Because of the roof's visibility, the slate detailing around the dormers is important to the character of this structure. Note how the slates swirl from a horizontal pattern on the main roof to a diamond pattern on the dormer roofs and side walls. (18th and Que Streets, NW, Washington, D.C.)

Craft Practices: Determining the craft practices used in the installation of a historic roof is another major concern in roof restoration. Early builders took great pride in their work, and experience has shown that the "rustic" or irregular designs commercially labled "Early American" are a 20th-century invention. For example, historically, wood shingles underwent several distinct operations in their manufacture including splitting by hand, and smoothing the surface with a draw knife. In modern nomenclature, the same item would be a "tapersplit" shingle which has been dressed. Unfortunately, the rustic appearance of today's commercially available "handsplit" and re-sawn shingle bears no resemblance to the hand-made roofing materials used on early American buildings.

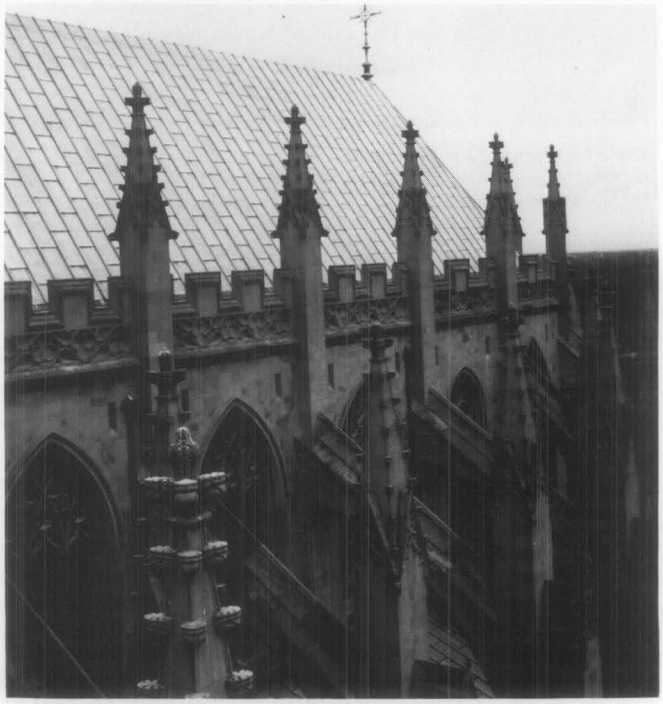

Good design and quality materials for the roof surface, fastenings, and flashing minimize roofing failures. This is essential on roofs such as on the National Cathedral where a thorough maintenance inspection and minor repairs cannot be done easily without special scaffolding. However, the success of the roof on any structure depends on frequent cleaning and repair of the gutter system. (Washington, D.C., photo courtesy of John Burns, A.I.A.)

Early craftsmen worked with a great deal of common sense; they understood their materials. For example they knew that wood shingles should be relatively narrow; shingles much wider than about 6" would split when walked on, or they may curl or crack from varying temperature and moisture. It is important to understand these aspects of craftsmanship, remembering that people wanted their roofs to be weather-tight and to last a long time. The recent use of "mother-goose" shingles on historic structures is a gross underestimation of the early craftsman's skills.

Supervision: Finding a modern craftsman to reproduce historic details may take some effort. It may even involve some special instruction to raise his understanding of certain historic craft practices. At the same time, it may be pointless (and expensive) to follow historic craft practices in any construction that will not be visible on the finished product. But if the roofing details are readily visible, their appearance should be based on architectural evidence or on historic prototypes. For instance, the spacing of the seams on a standing-seam metal roof will affect the building's overall scale and should therefore match the original dimensions of the seams.

Many older roofing practices are no longer performed because of modern improvements. Research and review of specific detailing in the roof with the contractor before beginning the project is highly recommended. For example, one early craft practice was to finish the ridge of a wood shingle roof with a roof "comb"—that is, the top course of one slope of the roof was extended uniformly beyond the peak to shield the ridge, and to provide some weather protection for the raw horizontal edges of the shingles on the other slope. If the "comb" is known to have been the correct detail, it should be used. Though this method leaves the top course vulnerable to the weather, a disguised strip of flashing will strengthen this weak point.

Detail drawings or a sample mock-up will help ensure that the contractor or craftsman understands the scope and special requirements of the project. It should never be assumed that the modern carpenter, slater, sheet metal worker, or roofer will know all the historic details. Supervision is as important as any other stage of the process.

Special problems inherent in the design of an elaborate historic roof can be controlled through the use of good materials and regular maintenance. The shape and detailing are essential elements of the building's historic character, and should not be modified, despite the use of alternative surface materials. (Gamwell House, Bellingham, Washington)

Alternative Materials

The use of the historic roofing material on a structure may be restricted by building codes or by the availability of the materials, in which case an appropriate alternative will have to be found.

Some municipal building codes allow variances for roofing materials in historic districts. In other instances, individual variances may be obtained. Most modern heating and cooking is fueled by gas, electricity, or oil—none of which emit the hot embers that historically have been the cause of roof fires. Where wood burning fireplaces or stoves are used, spark arrestor screens at the top of the chimneys help to prevent flaming material from escaping, thus reducing the number of fires that start at the roof. In most states, insurance rates have been equalized to reflect revised considerations for the risks involved with various roofing materials.

In a rehabilitation project, there may be valid reasons for replacing the roof with a material other than the original. The historic roofing may no longer be available, or the cost of obtaining specially fabricated materials may be prohibitive. But the decision to use an alternative material should be weighed carefully against the primary concern to keep the historic character of the building. If the roof is flat and is not visible from any elevation of the building, and if there are advantages to substituting a modern built-up composition roof for what might have been a flat metal roof, then it may make better economic and construction sense to use a modern roofing method. But if the roof is readily visible, the alternative material should match as closely as possible the scale, texture, and coloration of the historic roofing material.

Asphalt shingles or ceramic tiles are common substitute materials intended to duplicate the appearance of wood shingles, slates, or tiles. Fire-retardant, treated wood shingles are currently available. The treated wood tends, however, to be brittle, and may require extra care (and expense) to install. In some instances, shingles laid with an interlay of fire-retardent building paper may be an acceptable alternative.

Lead-coated copper, terne-coated steel, and aluminum/zinc-coated steel can successfully replace tin, terne plate, zinc, or lead. Copper-coated steel is a less expensive (and less durable) substitute for sheet copper.

The search for alternative roofing materials is not new. As early as the 18th century, fear of fire cause many wood shingle or board roofs to be replaced by sheet metal or clay tile. Some historic roofs were failures from the start, based on over-ambitious and naive use of materials as they were first developed. Research on a structure may reveal that an inadequately designed or a highly combustible roof was replaced early in its history, and therefore restoration of a later roof material would have a valid precedent. In some cities, the substitution of sheet metal on early row houses occurred as soon as the rolled material became available.

Cost and ease of maintenance may dictate the substitution of a material wholly different in appearance from the original. The practical problems (wind, weather, and roof pitch) should be weighed against the historical consideration of scale, texture, and color. Sometimes the effect of the alternative material will be minimal. But on roofs with a high degree of visibility and patterning or texture, the substitution may seriously alter the architectural character of the building.

Temporary Stabilization

It may be necessary to carry out an immediate and temporary stabilization to prevent further deterioration until research can determine how the roof should be restored or rehabilitated, or until funding can be provided to do a proper job. A simple covering of exterior plywood or roll roofing might provide adequate protection, but any temporary covering should be applied with caution. One should be careful not to overload the roof structure, or to damage or destroy historic evidence or fabric that might be incorporated into a new roof at a later date. In this sense, repairs with caulking or bituminous patching compounds should be recognized as potentially harmful, since they are difficult to remove, and at their best, are very temporary.

Precautions

The architect or contractor should warn the owner of any precautions to be taken against the specific hazards in installing the roofing material. Soldering of sheet metals, for instance, can be a fire hazard, either from the open flame or from overheating and undected smoldering of the wooden substrate materials.

Thought should be given to the design and placement of any modern roof appurtenances such as plumbing stacks, air vents, or TV antennas. Consideration should begin with the placement of modern plumbing on the interior of the building, otherwise a series of vent stacks may pierce the roof membrane at various spots creating maintenance problems as well as aesthetic ones. Air handling units placed in the attic space will require vents which, in turn, require sensitive design. Incorporating these in unused chimneys has been very successful

in the past.

Whenever gutters and downspouts are needed that were not on the building historically, the additions should be made as unobtrusively as possible, perhaps by painting them out with a color compatible with the nearby wall or trim.

Maintenance

Although a new roof can be an object of beauty, it will not be protective for long without proper maintenance. At least twice a year, the roof should be inspected against a checklist. All changes should be recorded and reported. Guidelines should be established for any foot traffic that may be required for the maintenance of the roof. Many roofing materials should not be walked on at all. For some—slate, asbestos, and clay tile—a self-supporting ladder might be hung over the ridge of the roof, or planks might be spanned across the roof surface. Such items should be specifically designed and kept in a storage space accessible to the roof. If exterior work ever requires hanging scaffolding, use caution to insure that the anchors do not penetrate, break, or wear the roofing surface, gutters, or flashing.

Any roofing system should be recognized as a membrane that is designed to be self-sustaining, but that can be easily damaged by intrusions such as pedestrian traffic or fallen tree branches. Certain items should be checked at specific times. For example, gutters tend to accumulate leaves and debris during the spring and fall and after heavy rain. Hidden gutter screening both at downspouts and over the full length of the gutter could help keep them clean. The surface material would require checking after a storm as well. Periodic checking of the underside of the roof from the attic after a storm or winter freezing may give early warning of any leaks. Generally, damage from water or ice is less likely on a roof that has good flashing on the outside and is well ventilated and insulated on the inside. Specific instructions for the maintenance of the different roof materials should be available from the architect or contractor.

Summary

The essential ingredients for replacing and maintaining a historic roof are:

- Understanding the historic character of the building and being sympathetic to it.
- Careful examination and recording of the existing roof and any evidence of earlier roofs.
- Consideration of the historic craftsmanship and detailing and implementing them in the renewal wherever visible.
- Supervision of the roofers or maintenance personnel to assure preservation of historic fabric and proper understanding of the scope and detailing of the project.
- Consideration of alternative materials where the original cannot be used.
- Cyclical maintenance program to assure that the staff understands how to take care of the roof and of the particular trouble spots to safeguard.

With these points in mind, it will be possible to preserve the architectural character and maintain the physical integrity of the roofing on a historic building.

This Preservation Brief was written by Sarah M. Sweetser, Architectural Historian, Technical Preservation Services Division. Much of the technical information was based upon an unpublished report prepared under contract for this office by John G. and Diana S. Waite. Some of the historical information was from Charles E. Peterson, FAIA, "American Notes," *Journal of the Society of Architectural Historians.*

The illustrations for this brief not specifically credited are from the files of the Technical Preservation Services Division.

This publication was prepared pursuant to Executive Order 11593, "Protection and Enhancement of the Cultural Environment," which directs the Secretary of the Interior to "develop and make available to Federal agencies and State and local governments information concerning professional methods and techniques for preserving, improving, restoring and maintaining historic properties." The Brief has been developed under the technical editorship of Lee H. Nelson, AIA, Chief, Preservation Assistance Division, National Park Service, U.S. Department of the Interior, Washington, D.C. 20240. Comments on the usefulness of this information are welcome and can be sent to Mr. Nelson at the above address. This publication is not copyrighted and can be reproduced without penalty. Normal procedures for credit to the author and the National Park Service are appreciated. **February 1978.**

Decorative features such as cupolas require extra maintenance. The flashing is carefully detailed to promote run-off, and the wooden ribbing must be kept well-painted. This roof surface, which was originally tin plate, has been replaced with lead-coated copper for maintenance purposes. (Lyndhurst, Tarrytown, New York, photo courtesy of the National Trust for Historic Preservation)

Additional readings on the subject of roofing are listed below.

Boaz, Joseph N., ed. *Architectural Graphic Standards.* New York: John Wiley and Sons, Inc., 1970. (Modern roofing types and detailing)

Briggs, Martin S. *A Short History of the Building Crafts.* London: Oxford University Press, 1925. (Descriptions of historic roofing materials)

Bulletin of the Association for Preservation Technology. Vol. 2 (nos. 1-2) 1970. (Entirely on roofing)

Holstrom, Ingmar; and Sandstrom, Christina. *Maintenance of Old Buildings: Preservation from the Technical and Antiquarian Standpoint.* Stockholm: National Swedish Building Research, 1972. (Contains a section on roof maintenance problems)

Insall, Donald. *The Care of Old Buildings Today.* London: The Architectural Press, 1972. (Excellent guide to some problems and solutions for historic roofs)

Labine, R.A. Clem. "Repairing Slate Roofs." *The Old House Journal* 3 (no. 12, Dec. 1975): 6-7.

Lefer, Henry. "A Birds-eye View." *Progressive Architecture.* (Mar. 1977), pp. 88-92. (Article on contemporary sheet metal)

National Slate Association. *Slate Roofs.* Reprint of 1926 edition, now available from the Vermont Structural Slate Co., Inc., Fairhaven, VT 05743. (An excellent reference for the many designs and details of slate roofs)

Peterson, Charles E. "Iron in Early American Roofs." *The Smithsonian Journal of History* 3 (no. 3). Edited by Peter C. Welsh. Washington, D.C.: Smithsonian Institution, 1968, pp. 41-76.

Waite, Diana S. *Nineteenth Century Tin Roofing and its Use at Hyde Hall.* Albany: New York State Historic Trust, 1971.

——. "Roofing for Early America." *Building Early America.* Edited by Charles E. Peterson. Radnor, Penn.: Chilton Book Co., 1976.

NATIONAL PARK SERVICE

STANDARDS FOR REHABILITATION AND GUIDELINES FOR REHABILITATING HISTORIC BUILDINGS

EXTERIOR FEATURES

roofs

HISTORICAL OVERVIEW

Identify Protect Repair Replace Missing feature Alterations/Additions

Identify, Retain and Preserve

RECOMMENDED

Identifying, retaining, and preserving roofs--and their functional and decorative features--that are important in defining the overall historic character of the building. This includes the roof's shape, such as hipped, gambrel, and mansard; decorative features such as cupolas, cresting chimneys, and weathervanes; and roofing material such as slate, wood, clay tile, and metal, as well as its size, color, and patterning.

These slate and copper mansard roofs are distinctive features of their urban setting and need to be retained and repaired, or if too deteriorated to repair, replaced in kind to match. Photo: NPS files.

NOT RECOMMENDED

Radically changing, damaging, or destroying roofs which are important in defining the overall historic character of the building so that, as a result, the character is diminished.

Removing a major portion of the roof or roofing material that is repairable, then reconstructing it with new material in order to create a uniform, or "improved" appearance.

Changing the configuration of a roof by adding new features such as dormer windows, vents, or skylights so that the historic character is diminished.

Stripping the roof of sound historic material such as slate, clay tile, wood, and architectural metal.

Applying paint or other coatings to roofing material which has been historically uncoated.

top

-GUIDELINES-

The Approach

Exterior Materials
Masonry
Wood
Architectural Metals

Exterior Features
Roofs
Windows
Entrances + Porches
Storefronts

Interior Features
Structural System
Spaces/Features/Finishes
Mechanical Systems

Site

Setting

Special Requirements
Energy Efficiency
New Additions
Accessibility
Health + Safety

THE STANDARDS

Protect and Maintain

RECOMMENDED

Protecting and maintaining a roof by cleaning the gutters and downspouts and replacing deteriorated flashing. Roof sheathing should also be checked for proper venting to prevent moisture condensation and water penetration; and to ensure that materials are free from insect infestation.

This new step flashing overlaps the next in a downward slope to shed water draining down the face of the chimney and the roof. Photo: © John Leeke.

Providing adequate anchorage for roofing material to guard against wind damage and moisture penetration.

Protecting a leaking roof with plywood and building paper until it can be properly repaired.

NOT RECOMMENDED

Failing to clean and maintain gutters and downspouts properly so that water and debris collect and cause damage to roof fasteners, sheathing, and the underlying structure.

Allowing roof fasteners, such as nails and clips to corrode so that roofing material is subject to accelerated deterioration.

Permitting a leaking roof to remain unprotected so that accelerated deterioration of historic building materials–masonry, wood, plaster, paint and structural members–occurs.

top

Repair

RECOMMENDED

Repairing a roof by reinforcing the historicmaterials which comprise roof features. Repairs will also generally include the limited replacement in kind--or with compatible substitute material–of those extensively deteriorated or missing parts of features when there are surviving prototypes such as cupola louvers, dentils, dormer roofing; or slates, tiles, or wood shingles on a main roof.

After removing the deteriorated slate and sliding the new slate into place, it is secured with a copper nail. A copper bib

(shown here) is formed to protect the newly created nail hole. Finally, a slate hammer is used to push the bib in place over the nail head. Photo: Jeffrey S. Levine.

NOT RECOMMENDED

Replacing an entire roof feature such as a cupolaor dormer when repair of the historic materials and limited replacement of deteriorated or missing parts are appropriate.

Failing to reuse intact slate or tile when only the roofing substrate needs replacement.

Using a substitute material for the replacement part that does not convey the visual appearance of the surviving parts of the roof or that is physically or chemically incompatible.

top

Replace

RECOMMENDED

Replacing in kind an entire feature of the roof that is too deteriorated to repair–if the overall form and detailing are still evident–using the physicalevidence as a model to reproduce the feature. Examples can include a large section of roofing, or a dormer or chimney. If using the same kind of material is not technically or economically feasible, then a compatible substitute material may be considered.

NOT RECOMMENDED

Removing a feature of the roof that is unrepairable, such as a chimney or dormer, and not replacing it; or replacing it with a new feature that does not convey the same visual appearance

Asphalt shingles are an incompatible replacement substitute for the original Spanish clay tiles. Photo: NPS files.

top

The following work is highlighted to indicate that it represents the particularly complex technical or design aspects of Rehabilitation projects and should only be considered after the preservation concerns listed above have been addressed.

Design for the Replacement of Missing Historic

Features

RECOMMENDED

Designing and constructing a new feature when the historic feature is completely missing, such as chimney or cupola. It may be an accurate restoration using historical, pictorial, and physical documentation; or be a new design that is compatible with the size, scale, material, and color of the historic building.

NOT RECOMMENDED

Creating a false historical appearance because the replaced feature is based on insufficient historical, pictorial, and physical documentation.

Introducing a new roof feature that is incompatible in size, scale, material and color.

top

The following work is highlighted to indicate that it represents the particularly complex technical or design aspects of Rehabilitation projects and should only be considered after the preservation concerns listed above have been addressed.

Alterations/Additions for the New Use

RECOMMENDED

Installing mechanical and service equipment on the roof such as air conditioning, transformers, or solar collectors when required for the new use so that they are inconspicuous from the public right-of-way and do not damage or obscure character-defining features.

Designing additions to roofs such as residential, office, or storage spaces; elevator housing; decks and terraces; or dormers or skylights when required by the new use so that they are inconspicuous from the public right-of-way and do not damage or obscure character-defining features.

NOT RECOMMENDED

Installing mechanical or service equipment so that it damages or obscures character-defining features; or is conspicuous from the public right-of-way.

Radically changing a character-defining roof shape or damaging or destroying character-defining roofing material as a result of incompatible design or improper installation techniques.

Lake Worth, Florida. The Art of Florida Living.sm

City Of Lake Worth
Department for Community Sustainability
Planning, Zoning and Historic Preservation Division
1900 Second Avenue North · Lake Worth · Florida 33461· Phone: 561-586-1687

MEMORANDUM DATE: May 4, 2016

AGENDA DATE: May 11, 2016

TO: Chair and Members of the Historic Resources Preservation Board

RE: **922 North O Street**

FROM: Aimee N. Sunny, Senior Preservation Coordinator
Department for Community Sustainability

TITLE: **HRPB Project Number 16-00100049**: Consideration of a Certificate of Appropriateness (COA) for roof replacement to the subject property located at **922 North O Street**, PCN# 38-43-44-21-15-290-0060. The subject building was constructed in 1952 and the property is a non-contributing resource within the Northeast Lucerne Local Historic District.

OWNER: Pamela Melvin
922 North O Street
Lake Worth, FL 33460

BACKGROUND:

The property at 922 North O Street has a one-story single-family structure built in 1952 in a Masonry Vernacular style. The property has public frontage on North O Street to the west. Character defining features of the building include original aluminum awning windows, decorative brick and iron work, and concrete masonry construction with a smooth stucco finish.

The original architectural plans for the main house are available in the City's property files. Based on the original plans, the building has undergone some changes over time, including roof replacement with a 3-tab asphalt shingle roof, window replacement in four openings, closed in carport, and an addition on the rear of the property. Overall, the building retains a moderate degree of historic integrity of location, setting, materials, and design.

REQUEST:

The Applicant is proposing to replace the existing 3-tab asphalt shingle roof with a new 5v Crimp metal roof.

COMPREHENSIVE PLAN CONSISTENCY:

It is the analysis of Staff that the project, as proposed, is not consistent with the Comprehensive Plan goals and objectives concerning historic preservation and housing due to the fact that the Applicant is proposing a change that will have an adverse effect on the historic integrity of the property.

Goal 1.4 Encourage preservation and rehabilitation of historic and natural resources and where appropriate restrict development that would damage or destroy these resources. (Objective 1.4.2)

Objective 3.2.5: To encourage the identification of historically significant housing, and to promote its preservation and rehabilitation as referenced by the Surveys of Historic Properties conducted for the City of Lake Worth.

Policy 3.2.5.1: Properties of special value for historic, architectural, cultural or aesthetic reasons will be restored and preserved through the enforcement of the City's Historic Preservation Ordinance to the extent feasible.

CONSEQUENT ACTION:
Approve the application; approve the application with conditions; continue the hearing to a date certain to request additional information; or deny the application.

ANALYSIS:
Staff has reviewed the documentation and materials provided in this application and applied the applicable guidelines and standards found in the City's Historic Preservation Ordinance, detailed in Attachment 1 – Decision Criteria.

The National Park Service and Secretary of the Interior's Standards have very specific criteria regarding replacement of historic materials. Specifically Standards 2, 5, and 6 apply in this situation:

Standard 2 - The historic character of a property will be retained and preserved. The removal of distinctive materials or alteration of features, spaces, and spatial relationships that characterize a property will be avoided.

Standard 5 - Distinctive materials, features, finishes, and construction techniques or examples of craftsmanship that characterize a property will be preserved.

Standard 6 - Deteriorated historic features shall be repaired rather than replaced. Where the severity of deterioration requires replacement of a distinctive feature, the new feature shall match the old in design, color, texture, and other visual qualities and, where possible, materials. Replacement of missing features shall be substantiated by documentary, physical, or pictorial evidence.

According to the Secretary of the Interior's Standards, distinctive materials that characterize a property shall be preserved. The roof material is an important character defining feature of a historic property. According to the City's property file, the original roof in 1952 was a flat white concrete tile. In 1980, this material was removed, and an asphalt shingle roof was installed. The building currently has a 3-tab asphalt shingle roof that was installed in 1990. In March, a COA for a GAF Dimensional Asphalt Shingle Roof was approved at Staff level, however, in April, the owner submitted a revision to change the roofing material from dimensional asphalt shingle to 5v crimp.

It is the analysis of Staff that the project as proposed is not compatible with the review criteria set forth in the City's Land Development Regulations, Historic Preservation Ordinance, Section 23.5-4. The proposed change to a 5V crimp roof is not appropriate for the structure, and negatively effects a character defining feature of the property. The masonry vernacular style of architecture primarily used flat white concrete tile as a roofing material, and occasionally used an asbestos shingle or rolled roofing. The original roof for this property was a flat white concrete tile and although the structure has had different roof materials since its construction, the structure has never had a metal roof.

The National Park Service Preservation Brief #4 "Roofing for Historic Buildings" has been included as Attachment #6. This Brief discusses the issues and options for the repair and replacement of historic roofs. Under the "Alternative Materials" section of the Brief, Staff would like to draw special attention to this paragraph:

"In a rehabilitation project, there may be valid reasons for replacing the roof with a material other than the original. The historic roofing may no longer be available, or the cost of obtaining specially fabricated materials may be prohibitive. But the decision to use an alternative material should be weighed carefully against the primary concern to keep the historic character of the building. If the roof is flat and is not visible from any elevation of the building, and if there are advantages to substituting a modern built-up composition roof for what might have been a flat metal roof, then it may make better economic and construction sense to use a modern roofing method. But if the roof is readily visible, the alternative material should match as closely as possible the scale, texture, and coloration of the historic roofing material."

Additionally, Staff has contacted the Florida Division of Historical Resources with regards to the request for roof replacement with standing seam metal. The response from the State's Senior Architect, Kenneth Cureton, is included as Attachment 5. In particular, Staff would like to draw attention to the follow excerpt,

"We would <u>strongly advise against</u> sheet metal products, since the strong vertical lines and shadows of such products would adversely impact the historic status of the building, as it would completely change the character of the roof and have no historical basis."

Therefore, based on this analysis, the proposed metal roof installation does not comply with the Secretary of the Interior's Standards for Rehabilitation or the City's Land Development Regulations, Historic Preservation Ordinance, §23.5-4(k).

Staff recommended two different replacement options to the Applicant, including flat white concrete tile and dimensional asphalt shingle. Staff does not recommend a 3-tab asphalt shingle roof, as the quality and life expectance is inferior to the dimensional asphalt shingle.

<u>RECOMMENDATION</u>:
Staff recommends that the Board deny the application as submitted, given that the metal roof installation as proposed by the Applicant does not meet the Secretary of the Interior's Standards for Rehabilitation, does not meet the criteria set forth in the City of Lake Worth Land Development Regulations §23.5-4(k), and will have an adverse effect on the integrity and character of the property.

If the Board chooses to approve a replacement roof for the structure, Staff recommends the following conditions:

1) The replacement roof material may be a white 3-tab asphalt shingle, a white dimensional asphalt shingle, or a flat white concrete roof tile. Staff recommends the flat white concrete tile as the most appropriate option for the historic masonry vernacular structure.

<u>POTENTIAL MOTIONS</u>:
I MOVE TO **DENY** HRPB 16-00100049: Consideration of a Certificate of Appropriateness (COA) for roof replacement for the subject building located at 922 N O Street because the Applicant has not established by a preponderance of the evidence that the application is in compliance with the City of Lake Worth Land Development Regulations Section 23.5-4, the Secretary of the interiors Standards for the Rehabilitation of Historic Properties, and the City's Comprehensive Plan.

I MOVE TO **APPROVE** HRPB 16-00100049: Consideration of a Certificate of Appropriateness (COA) for roof replacement for the subject building located at 922 N O Street as recommended by Staff, based upon the preponderance of competent substantial evidence, and pursuant to the City of Lake Worth Land Development Regulations Section 23.5-4.

ATTACHMENTS:

1. Administrative Decision Criteria
2. Application Photographs
3. Justification Statement
4. Proposed Roof NOA
5. Previously Approved COA
6. Division of Historical Resources Letter
7. National Park Service Preservation Brief #4 – Roofing for Historic Buildings

LOCATION MAP

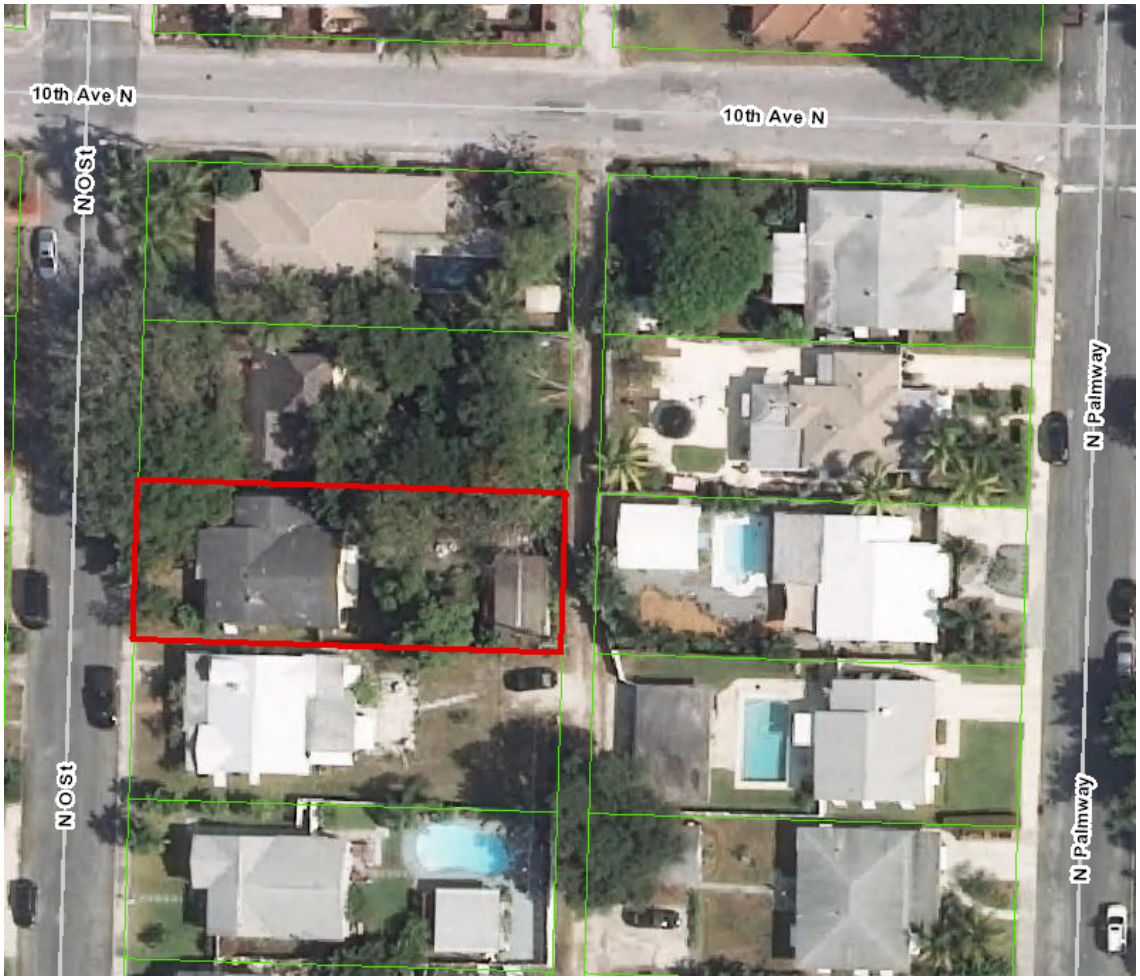

MEMORANDUM

DATE: May 4, 2016

TO: Chair and Members of the Historic Resources Preservation Board

FROM: Aimee N. Sunny, Preservation Planning Coordinator
Department of Community Sustainability

SUBJECT: **HRPB Project Number 16-00100049:** Consideration of a Certificate of Appropriateness (COA) for roof replacement to the subject property located at **922 N O St**, PCN# 38-43-44-21-15-290-0060. The subject building was constructed in 1952 and the property is a non-contributing resource within the Northeast Lucerne Local Historic District.

HRPB Meeting Date: May 11, 2016

Per Section 23.5-4k(1) of the historic preservation ordinance, the Board shall use the following criteria in making a determination:

A. What is the effect of the proposed work on the landmark or the property upon which such work is to be done?
Response: It is the analyst of Staff that the work proposed would have an adverse effect on the historic appearance of the building, and is not compatible with the design or style.

B. What is the relationship between such work and other structures on the landmark site or other property in the historic district?
Response: The proposed work will have no direct physical effect on any surrounding properties within the surrounding Northeast Lucerne Local Historic District, however it will have an indirect visual effect on the district.

C. To what extent will the historic, architectural, or archaeological significance, architectural style, design, arrangement, texture, materials and color of the landmark or the property be affected?
Response: The project as proposed would have an adverse effect on the integrity of material and design of the building. The proposed roof replacement is not compatible with the architectural style and design of the structure.

D. Would denial of a certificate of appropriateness deprive the property owner of reasonable beneficial use of his property?
Response: The denial of this COA as submitted does not prevent the Applicant from proposing other alterations to the home, or re-roofing with an alternate recommended material.

E. Are the applicant's plans technically feasible and capable of being carried out within a reasonable time?
Response: Yes.

F. Do the plans satisfy the applicable portions of the general criteria contained in the United States Secretary of the Interior's Standards for Rehabilitation then in effect or as they may be revised from time to time? The current version of the Secretary's Guidelines provides as follows:

(1) A property shall be used for its historic purpose or be placed in a new use that requires minimal change to the defining characteristics of the building and its site and environment.
Response: No change to the use of the property is proposed.

(2) This historic character of the property shall be retained and preserved. The removal of historic materials or alteration of features and spaces that characterize a property shall be avoided.
Response: It is the analyst of Staff that the proposed roof material would alter the Masonry Vernacular character of the structure by altering the strong horizontal lines of the existing shingle roof.

(3) Each property shall be recognized as a physical record of its time, place and use. Changes that create a false sense of historical development, such as adding conjectural features or architectural elements from other buildings, shall not be undertaken.
Response: Not applicable to this project.

(4) Most properties change over time; those changes that have acquired historic significance in their own right shall be retained and preserved.
Response: Not applicable to this project.

(5) Distinctive features, finishes and construction techniques or examples of craftsmanship that characterize a historic property shall be preserved.
Response: The roof is a distinctive feature of the structure, and the type of roof material used on the structure should be retained.

(6) Deteriorated architectural features shall be repaired rather than replaced, wherever possible. In the event replacement is necessary, the new material should match the material being replaced in composition, design, color, texture, and other visual qualities.
Response: Not applicable to this project

Repair or replacement of missing architectural features should be based on accurate duplications of features, substantiated by historical, physical, or pictorial evidence rather than on conjectural designs or because the different architectural elements from other buildings or structures happen to be available for relocation.
Response: Not applicable to this project.

(7) Chemical or physical treatments, such as sandblasting, that cause damage to historic materials, shall not be used. The surface cleaning of structures, if appropriate, shall be undertaken using the gentlest means possible.
Response: Not applicable to this request. If the Applicant chooses to repair rather than replace the windows, Staff would recommend the gentlest means possible to remove the deteriorating paint.

(8) Significant archeological resources affected by a project shall be protected and preserved. If such resources must be disturbed, mitigation measures shall be undertaken.
Response: Not applicable to this project.

(9) New additions, exterior alterations or related new construction shall not destroy historic materials that characterize the property. The new construction shall be differentiated from the old and shall be compatible with the massing, size, scale and architectural features to protect the historic integrity of the property and its environment.
Response: Not applicable to this project.

(10) New additions and adjacent or related new construction shall be undertaken in such manner that, if removed in the future, the essential form and integrity of the historic building and its environment would be unimpaired.
Response: Not applicable to this project.

G. What are the effects of the requested change on those elements or features of the structure which served as the basis for its designation and will the requested changes cause the least possible adverse effect on those elements or features?
Response: It is the analyst of Staff that the historic character of the property would be adversely affected by the proposed project as submitted by the Applicant, as outlined above. The proposal does not represent the least possible adverse effect.

Section 23.5-4k(2). Additional guidelines for alterations.

In approving or denying applications for certificates of appropriateness for alterations, the HRPB shall also consider the following additional guidelines:

A. Is every reasonable effort being made to provide a compatible use for a property that requires minimal alteration of the building, structure or site and its environment, or to use the property for its originally intended purpose?
Response: No change to the use of the property is proposed.

B. Are the distinguishing original qualities or character of a building, structure or site and its environment being destroyed? The removal or alteration of any historic material or distinctive architectural features shall be avoided whenever possible.
Response: It is the analyst of Staff that the historic character of the property would be adversely affected by the proposed project as submitted by the Applicant, as outlined above. The proposal does not represent the least possible adverse effect.

C. When a certificate of appropriateness is requested to replace windows or doors, the HRPB shall permit the property owner's original design when the HRPB's alternative design would result in an increase in cost of thirty (30) percent above the owner's original cost. The owner shall be required to demonstrate to the HRPB that:
(1) The work to be performed will conform to the original window openings of the structure; and
Response: Not applicable to this project.

(2) That the replacement windows or doors with less expensive materials will achieve a savings in excess of thirty (30) percent over historically compatible materials otherwise required by this code.
Response: Not applicable to this project.

922
HANDS
OFF
OUR BE
NO to Private De
NOTICE
This property is being con
HRPB Project
Roof R
For information regarding
City of La
anning,
preserv

922

922

922

922
HA
O

WAL

Pamela Melvin
922 N. ‘O’ St.
Lake Worth

The change that I would like to implement is for the following reasons:

- I am seeking to add architectural character that is not at this time present and, in turn, this will create a historic element. The metal will add a unique architectural dimension and create a more interesting curb appeal so as to add aesthetic value to my home.
- The metal roof is the most environmentally-beneficial roof for many reasons and here are some of them: it is made from 95% recycled content, has a minimal carbon footprint, unlike traditional shingles it has a special Kynar 500® or Hylar 5000 hI-R coating that reflects radiant heat, and it cuts energy costs by up to 20%, plus reduces attic temperatures by up to 34%.

Thank You,
Pamela Melvin

MIAMI-DADE COUNTY
DEPARTMENT OF REGULATORY AND ECONOMIC RESOURCES (RER)
BOARD AND CODE ADMINISTRATION DIVISION

MIAMI-DADE COUNTY
PRODUCT CONTROL SECTION
11805 SW 26 Street, Room 208
Miami, Florida 33175-2474
T (786) 315-2590 F (786) 315-2599
www.miamidade.gov/economy

NOTICE OF ACCEPTANCE (NOA)

Metal Sales Manufacturing Corporation
545 South 3rd Street, Suite 200
Louisville, KY. 40202

SCOPE:

This NOA is being issued under the applicable rules and regulations governing the use of construction materials. The documentation submitted has been reviewed and accepted by Miami-Dade County RER - Product Control Section to be used in Miami Dade County and other areas where allowed by the Authority Having Jurisdiction (AHJ).

This NOA shall not be valid after the expiration date stated below. The Miami-Dade County Product Control Section (In Miami Dade County) and/or the AHJ (in areas other than Miami Dade County) reserve the right to have this product or material tested for quality assurance purposes. If this product or material fails to perform in the accepted manner, the manufacturer will incur the expense of such testing and the AHJ may immediately revoke, modify, or suspend the use of such product or material within their jurisdiction. RER reserves the right to revoke this acceptance, if it is determined by Miami-Dade County Product Control Section that this product or material fails to meet the requirements of the applicable building code.
This product is approved as described herein, and has been designed to comply with the Florida Building Code including the High Velocity Hurricane Zone of the Florida Building Code.

DESCRIPTION: 5V Crimp Metal Roofing System

LABELING: Each unit shall bear a permanent label with the manufacturer's name or logo, city, state and following statement: "Miami-Dade County Product Control Approved", unless otherwise noted herein.

RENEWAL of this NOA shall be considered after a renewal application has been filed and there has been no change in the applicable building code negatively affecting the performance of this product.

TERMINATION of this NOA will occur after the expiration date or if there has been a revision or change in the materials, use, and/or manufacture of the product or process. Misuse of this NOA as an endorsement of any product, for sales, advertising or any other purposes shall automatically terminate this NOA. Failure to comply with any section of this NOA shall be cause for termination and removal of NOA.

ADVERTISEMENT: The NOA number preceded by the words Miami-Dade County, Florida, and followed by the expiration date may be displayed in advertising literature. If any portion of the NOA is displayed, then it shall be done in its entirety.

INSPECTION: A copy of this entire NOA shall be provided to the user by the manufacturer or its distributors and shall be available for inspection at the job site at the request of the Building Official.

This renews NOA#09-0105.09 and consists of pages 1 through 9.
The submitted documentation was reviewed by Alex Tigera.

MIAMI-DADE COUNTY APPROVED

ROOFING SYSTEM APPROVAL:

Category:	Roofing
Sub-Category:	Metal, Panels (Non-Structural)
Material:	Steel
Deck Type:	Wood
Maximum Design Pressure	**-196.75 psf**

TRADE NAMES OF PRODUCTS MANUFACTURED OR LABELED BY APPLICANT:

Product	Dimensions	Test Specifications	Product Description
5V-Crimp Metal Roof	l = varies w = 24" h = ½" Min. Thickness 0.0179" (26ga.) Min. Yield Strength: 60ksi	TAS 110	Corrosion resistant, galvanized, preformed, coated, prefinished, metal panels.
Trim Pieces	l = varies w = varies Min. Thickness 0.0179" (26ga.)	TAS 110	Standard flashing and trim pieces. Manufactured for each panel width.

MANUFACTURING LOCATION:

1. Jacksonville, FL.

EVIDENCE SUBMITTED:

Test Agency	Test Identifier	Test Name/Report	Date
Akzo Coatings		ASTM G 23 ASTM B 117	
Valspar Corporation		ASTM G 23 ASTM B 117	
Underwriters Laboratory	R9697	UL 790	July 1998
PRI Construction Materials	MSMC-003-02-01	TAS-100	June 2006
Celotex Corporation Testing Services	MTS 520103	ASTM E 8	Jan. 1999
Hurricane Test Laboratory, Inc.	0103-1213-98 0103-0712-09	TAS 125 TAS 125	Dec. 1998 Sept 2009
Farabaugh Engineering and Testing, Inc.	T181-05 T235-07 T240-09	TAS 125 TAS 125 TAS 125	July 2005 July 2007 Sept 2009

APPROVED ASSEMBLIES:

System A: 5V-Crimp Metal Roof Panel

Deck Type: Wood, Non-insulated

Deck Description: New Construction $^{19}/_{32}$" or greater plywood or wood plank, or for re-roofing 15/32" or greater plywood.

Maximum Uplift Pressure: **See Table A below.**

Deck Attachment: In accordance with applicable Building Code, but in no case shall it be less than 8d ring shank nails spaced 6" o.c. In reroofing, where the deck is less than $^{19}/_{32}$" thick (Minimum $^{15}/_{32}$") the above attachment method must be in addition to existing attachment.

Underlayment: Minimum underlayment shall be an ASTM D 226 Type II installed with a minimum 4" side-lap and 6" end-laps. Underlayment shall be fastened with corrosion resistant tin-caps and 12 gauge 1 ¼" annular ring-shank nails, spaced 6" o.c. at all laps and two staggered rows 12" o.c. in the field of the roll. Or, any approved underlayment having a current NOA.

Fire Barrier: Any approved fire barrier having a current NOA. Refer to a current fire directory listing for fire ratings of this roofing system assembly as well as the location of the fire barrier within the assembly. See Limitation # 1.

Valleys: Valley construction shall be in compliance with Roofing Application Standard RAS 133 and with Metal Sales Manufacturing Corporation's current published installation instructions.

Metal Panels and Accessories: Install the "5V-Crimp Panels" and accessories in compliance with Metal Sales Manufacturing Corporation's current, published installation instructions and details. Flashing, penetrations, valley construction and other details shall be constructed in compliance with the minimum requirements provided in Roofing Application Standards RAS 133.

Panel fasteners shall be #9-15 x 1-½" self drilling, self tapping, hex head screws with sealing washer of sufficient length to penetrate through the sheathing a minimum of $^{3}/_{16}$ inch.

Fasteners shall be installed at a maximum spacing as listed in **Table A** below parallel to the slope. Fasteners shall be installed at a maximum of 12" o.c. at panel edge. See detail herein.

TABLE A
MAXIMUM DESIGN PRESSURES

Roof Areas	Field	Perimeter and Corner[1]
Maximum Design Pressures	**-74.8 psf**	**-196.75 psf**
Maximum Fastener Spacing	**16" o.c.**	**8" o.c.**
1. Extrapolation shall not be allowed		

System B:	5V-Crimp Metal Roof Panel
Deck Type:	Wood, Non-insulated
Deck Description:	New Construction $^{19}/_{32}$" or greater plywood or wood plank, or for re-roofing 15/32" or greater plywood.
Maximum Uplift Pressure:	**See Table B below.**

Deck Attachment:	In accordance with applicable Building Code, but in no case shall it be less than 8d ring shank nails spaced 6" o.c. In reroofing, where the deck is less than $^{19}/_{32}$" thick (Minimum $^{15}/_{32}$") the above attachment method must be in addition to existing attachment.
Underlayment:	Minimum underlayment shall be an ASTM D 226 Type II installed with a minimum 4" side-lap and 6" end-laps. Underlayment shall be fastened with corrosion resistant tin-caps and 12 gauge 1 ¼" annular ring-shank nails, spaced 6" o.c. at all laps and two staggered rows 12" o.c. in the field of the roll. Or, any approved underlayment having a current NOA.
Fire Barrier:	Any approved fire barrier having a current NOA. Refer to a current fire directory listing for fire ratings of this roofing system assembly as well as the location of the fire barrier within the assembly. See Limitation # 1.
Valleys:	Valley construction shall be in compliance with Roofing Application Standard RAS 133 and with Metal Sales Manufacturing Corporation's current published installation instructions.
Metal Panels and Accessories:	Install the "5V-Crimp Panels" and accessories in compliance with Metal Sales Manufacturing Corporation's current, published installation instructions and details. Flashing, penetrations, valley construction and other details shall be constructed in compliance with the minimum requirements provided in Roofing Application Standards RAS 133. Panel fasteners shall be #9-15 x 1-½" self drilling, self tapping, hex head screws with sealing washer of sufficient length to penetrate through the sheathing a minimum of $^{3}/_{16}$ inch. Fasteners shall be installed at a maximum spacing as listed in **Table B** below parallel to the slope. Fasteners shall be installed at a maximum of 6" o.c. at panel edge. See detail herein.

TABLE B
MAXIMUM DESIGN PRESSURES

Roof Areas	Field	Perimeter and Corner[1]
Maximum Design Pressures	**-84.5 psf**	**-131.3 psf**
Maximum Fastener Spacing	**24" o.c.**	**18" o.c.**
1. Extrapolation shall not be allowed		

LIMITATIONS

1. Fire classification is not part of this acceptance; refer to a current Approved Roofing Materials Directory for fire ratings of this product.
2. The maximum designed pressure listed herein shall be applicable to all roof pressure zones (i.e. field, perimeters, and corners). Neither rational analysis, nor extrapolation shall be permitted for enhanced fastening at enhanced pressure zones (i.e. perimeters, extended corners and corners).
3. Panel shall be roll formed in continuous lengths from eave to ridge. Maximum lengths shall be described in the Roofing Application Standard RAS 133.
4. All panels shall be permanently labeled with the manufacturer's name and/or logo, and the following statement: "Miami-Dade County Product Control Approved" **or** with the Miami-Dade County Product Control Seal as seen below. All clips shall be permanently labeled with the manufacturer's name and/or logo, and/or model.

MIAMI-DADE COUNTY
APPROVED

5. All products listed herein shall have a quality assurance audit in accordance with the Florida Building Code and Rule 9N-3 of the Florida Administrative Code.

PROFILE DRAWINGS

DETAIL A
5V-CRIMP METAL ROOF PANEL

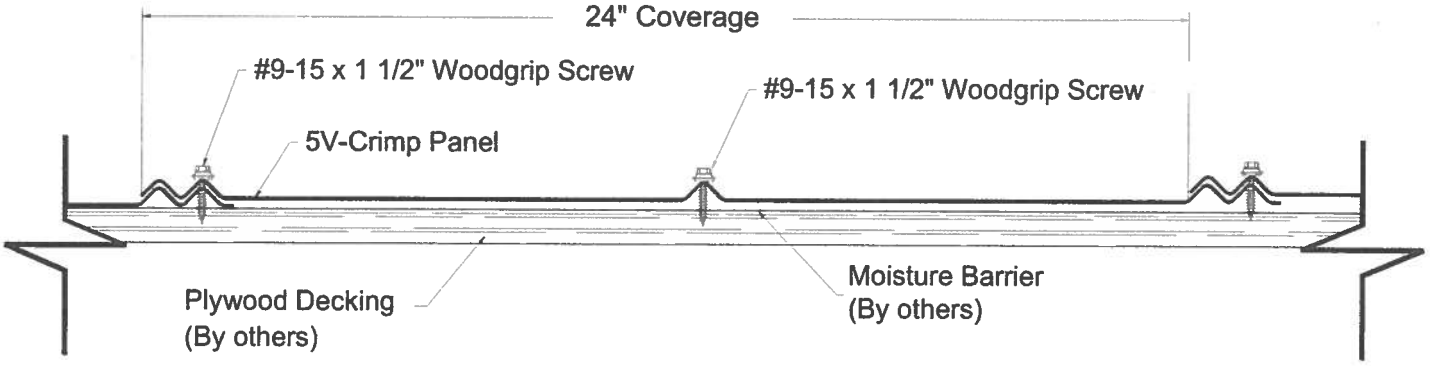

FASTENING PATTERN FOR 5V-CRIMP AT INTERIOR OF PANEL

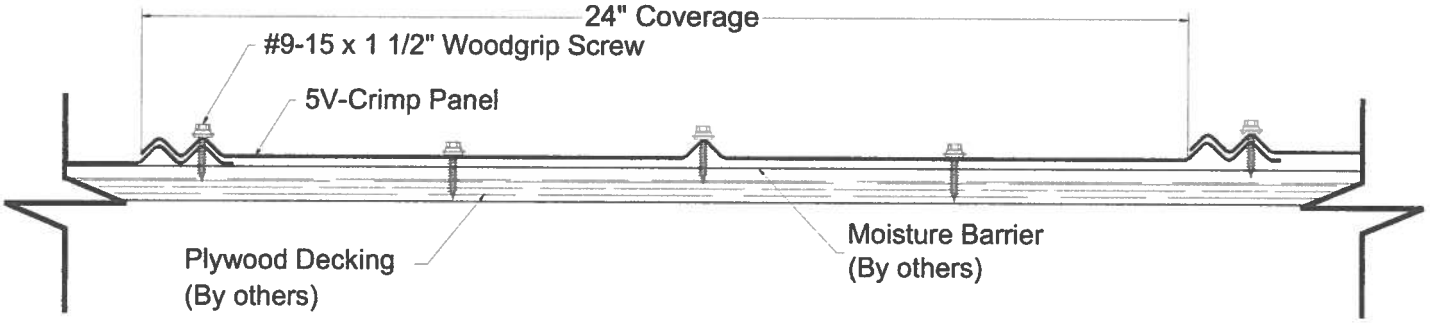

FASTENING PATTERN FOR 5V-CRIMP AT EAVE

5V-CRIMP METAL ROOF PANEL

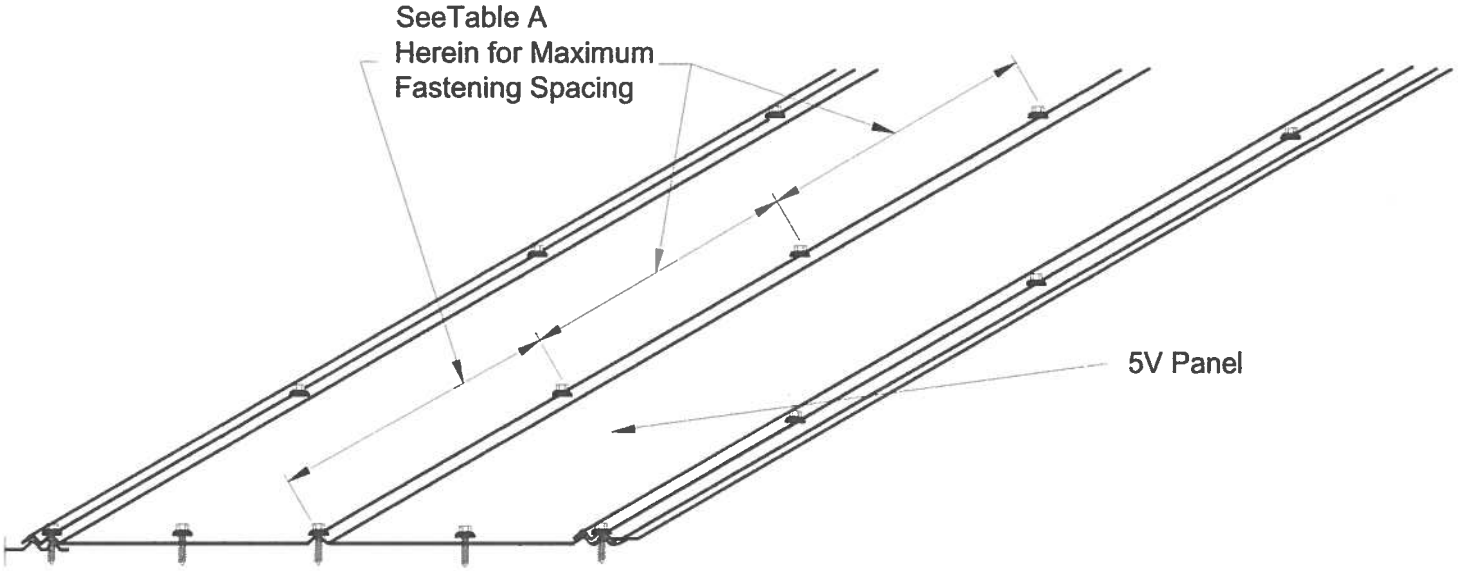

DETAIL B

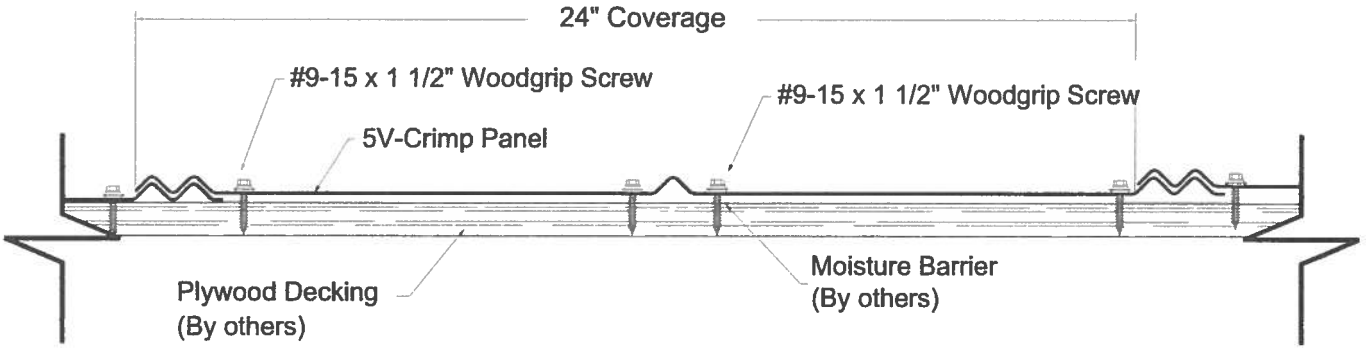

FASTENING PATTERN FOR 5V-CRIMP AT INTERIOR OF PANEL

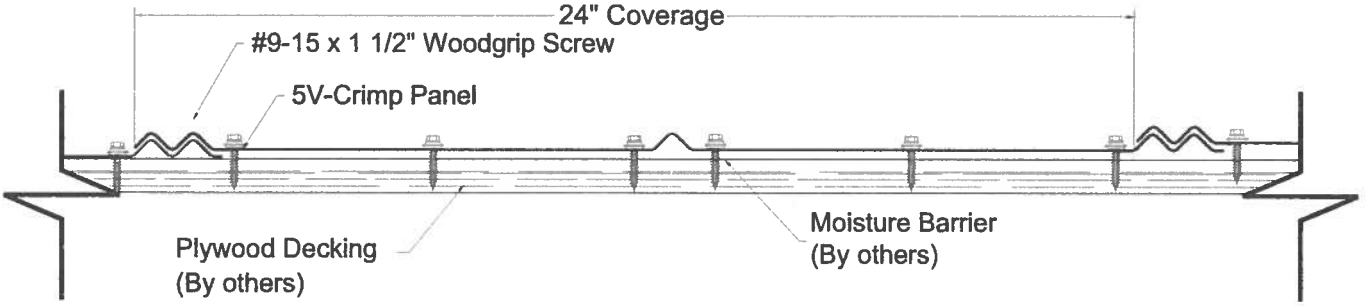

FASTENING PATTERN FOR 5V-CRIMP AT EAVE

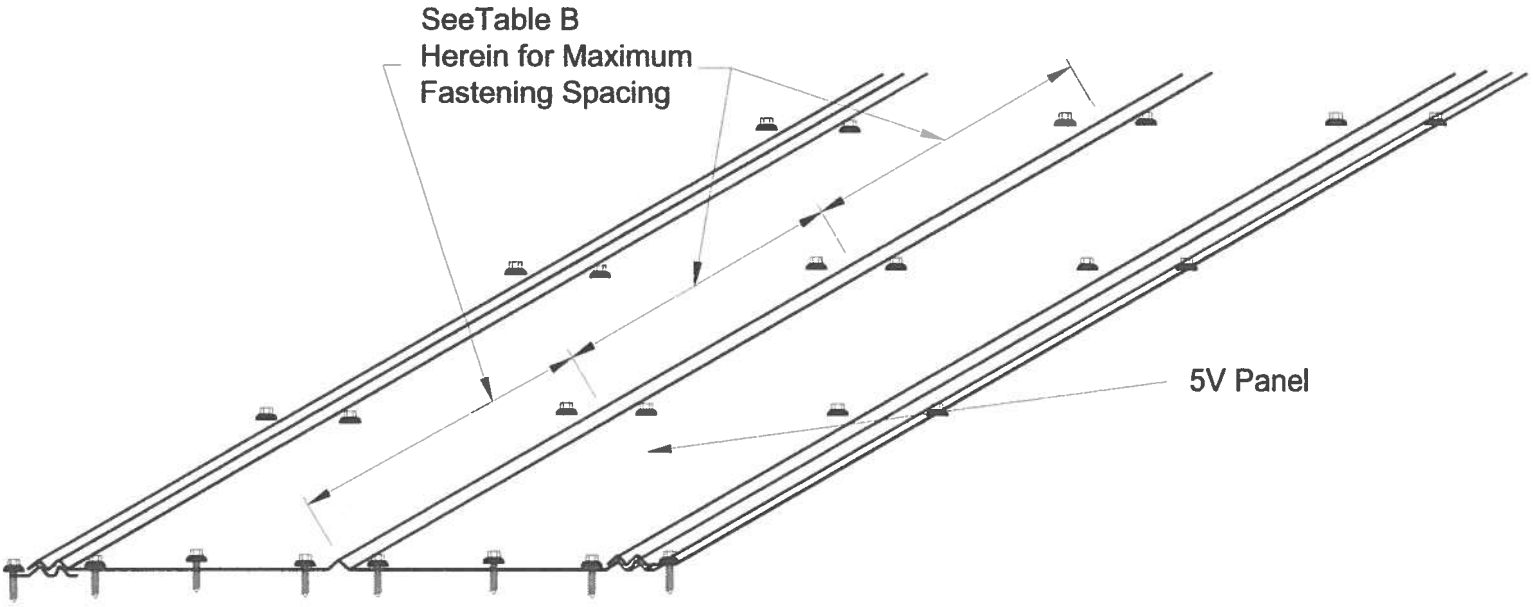

END OF THIS ACCEPTANCE

DEPARTMENT for COMMUNITY SUSTAINABILITY
PLANNING, ZONING, AND HISTORIC PRESERVATION
1900 2nd Ave North · Lake Worth, Florida 33461 · Phone: 561-586-1687

DATE: 03/15/2016

JOB SITE COPY
SUBJECT TO COMPLIANCE WITH ALL CODES AND ORDINANCES IN EFFECT IN THE CITY OF LAKE WORTH

APPLICANT: Pamela Melvin
922 N O Street
Lake Worth, FL 33460

PROJECT: **COA#16-00100049**: Certificate of Appropriateness (COA) for roof replacement for the subject property located at 922 N O St; PCN#38-43-44-21-15-290-0060. The subject property is a non-contributing resource within the Northeast Lucerne Local Historic District.

On March 7, 2016, the Division of Planning, Zoning, and Historic Preservation received a COA application for roof replacement for the single-family structure located at 922 N O St. The application proposes to replace the existing asphalt shingle with a new GAF Timberline dimensional asphalt shingle roof, per the documentation submitted. This COA application was submitted concurrently with building permit application #16-637.

Staff approves the request as described in the COA application. Staff recommends that the Applicant consider installing white shingles in order to achieve the greatest energy efficiency. This approval does not include any modification or alteration to the structural elements of the roof system that may alter its configuration and height. This approval does not include any alterations to the decorative trim, fascia, and soffits.

The project as proposed is consistent with the requirements of the historic preservation ordinance and will have no adverse physical or visual effect on the property or the surrounding historic district. This letter only constitutes an approval of compliance with the review process for exterior changes to a property within a local historic district as defined in City of Lake Worth Municipal Code §23.5-4. This approval does not exempt the applicant from complying with the building code and zoning ordinance of the City of Lake Worth concerning roof installation.

No changes shall be made to the information on this approved application that could in any way constitute a change in the aesthetic character of the project without approval of staff or the Historic Resources Preservation Board. No additional changes to the structure shall be made without further approvals.

Please be advised the Certificate of Appropriateness authorized herein shall be null and void unless construction has commenced and is proceeding within one (1) year from the staff approval date.

K. Jacob

Katie Jacob, Associate Preservation Planner
Division of Planning, Zoning, and Historic Preservation
Department for Community Sustainability

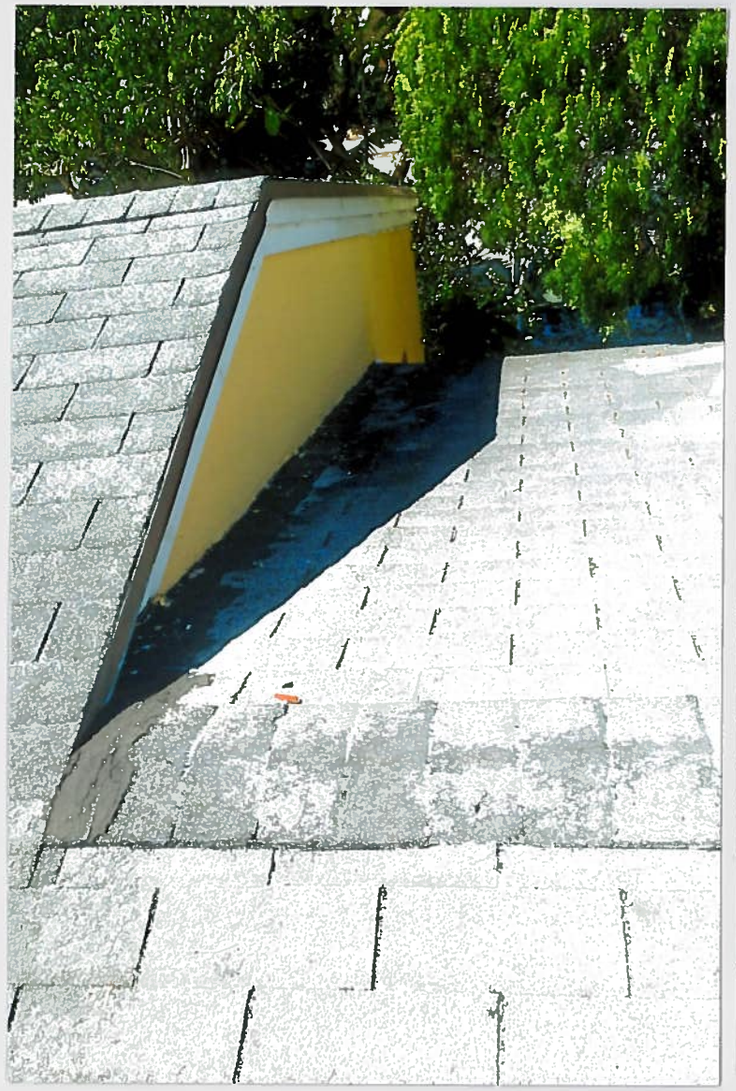

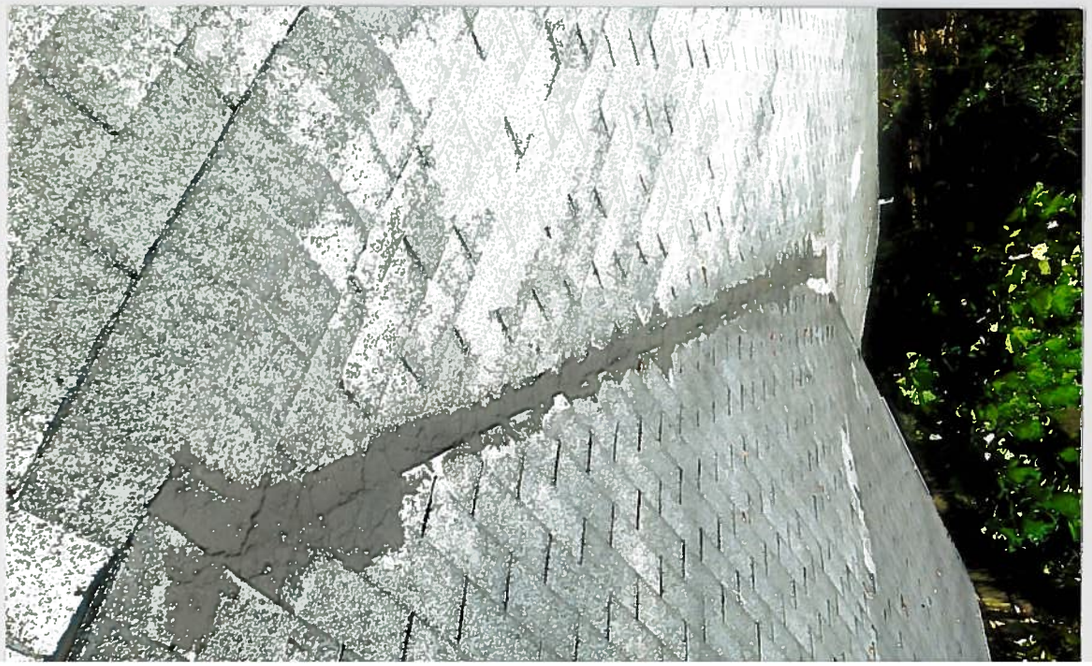

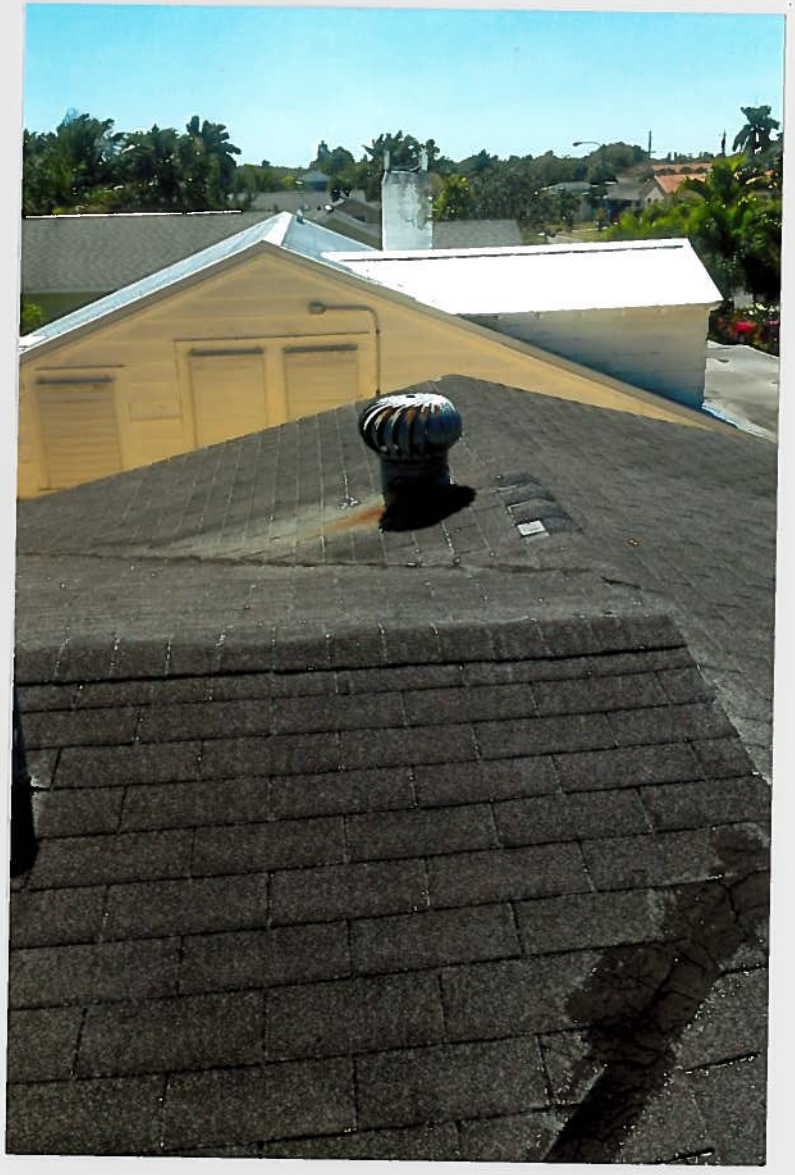

Aimee Sunny

From: Cureton, Kenneth H. <Kenneth.Cureton@dos.myflorida.com>
Sent: Friday, February 05, 2016 4:17 PM
To: Aimee Sunny
Subject: RE: Lake Worth - Roof Questions

Aimee

To follow up on our conversation this morning, the State Historic Preservation Office follows the National Park Service / Secretary of the Interior's Standards for Rehabilitation and Guidelines for the Rehabilitation of Historic Buildings explicitly when reviewing projects under our purview, along with the supplemental guidance NPS provides. Such additional NPS guidance can be found in their preservation topics index here: http://www.nps.gov/tps/how-to-preserve/by-topic.htm

These standards are incorporated by reference in Section 1203 and Appendix B of the Florida Building Code – Existing Building, 5th Edition as code mandated requirements for work on buildings that meet the definition of a **Historic Building** in Section 1202 therein. Therefore, the argument can be made that if the Standards are not followed, the work is not in compliance with the building code.

In all four cases you have presented, the first consideration would be replacement of the historic materials based on pictorial evidence, which you have provided. The NPS Guidelines allows that when an in-kind replacement of a historic roof "…is not technically or economically feasible, then a *compatible* substitute material may be considered." The key here is compatibility. If in-kind replacement is not feasible, our opinion of a *compatible* roof for these particular projects is the actual roof material would be subordinate to the color and pattern that the historic roof provided. The low slope of the roof pitch in all four examples would allow for replacement with an architectural grade shingle, provided it was in the light grey color range the metal shingles originally presented. We feel that a white shingle would not be an appropriate color.

We would strongly advise against sheet metal products, since the strong vertical lines and shadows of such products would adversely impact the historic status of the building, as it would completely change the character of the roof and have no historical basis.

We would also strongly advise that if a lack of selection of metal shingles with Florida Product Approval is the reason for higher costs, your authority having jurisdiction should contact the Florida Building Commission to investigate local product approval options.

Hope this opinion helps clarify how we would view such issues on a State level.

Thanks for your inquiry and best of luck with your projects.

Kenneth H. Cureton, R.A., NCARB
Senior Architect, Bureau of Historic Preservation | Division of Historical Resources | Florida Department of State | 500 South Bronough Street | Tallahassee, Florida 32399 | 850.245.6343 | 1.800.847.7278 | Fax: 850.245.6439 | Kenneth.Cureton@DOS.MyFlorida.com | dos.myflorida.com/historical

FLORIDA DEPARTMENT OF STATE
DIVISION OF
Historical Resources

From: Aimee Sunny [mailto:asunny@LakeWorth.org]
Sent: Friday, February 05, 2016 12:03 PM
To: Cureton, Kenneth H.
Cc: Hilburn, Richard L.
Subject: Lake Worth - Roof Questions

Mr. Cureton,

Thank you very much for your time and consideration this morning regarding the projects I mentioned in Lake Worth. I very much appreciate your analysis and discussion on the various roof types we discussed, as they relate to historic properties.

As I mentioned, I have attached a few photos of several cases that will be heard before the HRPB next Wednesday, February 10th, and I welcome your input:

520 N Palmway – Contributing, c.1940, Frame Vernacular, with original flat metal shingles. The request is for Southeastern Metals, SEM-Lok Snap Standing Seam 16" wide Aluminum panels.

612 N Palmway – Contributing, c.1940, Frame Vernacular, with original flat metal shingles. The request is for Gulf Coast Supply, Gulf-Lok 16" Wide Roof Panels, 26 gauge steel.

726 N M St – Non-contributing, c. 1940, Frame Vernacular, with original flat metal shingle that have been coated several times. The request is for CertainTeed Landmark dimensional asphalt shingles.

731 N M St – Surveyed as Contributing, but has lost many features over time. 1946, Masonry Vernacular. The original construction drawings called for rolled slate roofing, the roof was changed to flat white concrete tile in 1955, and later changed to 3-tab asphalt shingles in the 1990's. The request is now to change to Gulf Coast Supply, Gulf-Lok 16" Wide Aluminum Roof Panels, in a white color.

I look forward to receiving your suggestions, and to working with you in the future.

Best wishes,

Aimee N. Sunny
Preservation Planning Coordinator
City of Lake Worth
1900 Second Avenue North

Lake Worth, Florida 33461
561-586-1690
asunny@lakeworth.org

The Department of State is committed to excellence.
Please take our Customer Satisfaction Survey.

4 PRESERVATION BRIEFS

HABS

Roofing for Historic Buildings

Sarah M. Sweetser

U.S. Department of the Interior
National Park Service
Cultural Resources

Heritage Preservation Services

Significance of the Roof

A weather-tight roof is basic in the preservation of a structure, regardless of its age, size, or design. In the system that allows a building to work as a shelter, the roof sheds the rain, shades from the sun, and buffers the weather.

During some periods in the history of architecture, the roof imparts much of the architectural character. It defines the style and contributes to the building's aesthetics. The hipped roofs of Georgian architecture, the turrets of Queen Anne, the Mansard roofs, and the graceful slopes of the Shingle Style and Bungalow designs are examples of the use of roofing as a major design feature.

But no matter how decorative the patterning or how compelling the form, the roof is a highly vulnerable element of a shelter that will inevitable fail. A poor roof will permit the accelerated deterioration of historic building materials—masonry, wood, plaster, paint—and will cause general disintegration of the basic structure. Furthermore, there is an urgency involved in repairing a leaky roof since such repair costs will quickly become prohibitive. Although such action is desirable as soon as a failure is discovered, temporary patching methods should be carefully chosen to prevent inadvertent damage to sound or historic roofing materials and related features. Before any repair work is performed, the historic value of the materials used on the roof should be understood. Then a complete internal and external inspection of the roof should be planned to determine all the causes of failure and to identify the alternatives for repair or replacement of the roofing.

Historic Roofing Materials in America

Clay Tile: European settlers used clay tile for roofing as early as the mid-17th century; many pantiles (S-curved tiles), as well as flat roofing tiles, were used in Jamestown, Virginia. In some cities such as New York and Boston, clay was popularly used as a precaution against such fire as those that engulfed London in 1666 and scorched Boston in 1679.

Tiles roofs found in the mid-18th century Moravian settlements in Pennsylvania closely resembled those found in Germany. Typically, the tiles were 14–15″ long, 6–7″ wide with a curved butt. A lug on the back allowed the tiles to hang on the lathing without nails or pegs. The tile surface was usually scored with finger marks to promote drainage. In the Southwest, the tile roofs of the Spanish missionaries (mission tiles) were first manufactured (ca. 1780) at the Mission San Antonio de Padua in California. These semicircular tiles were made by molding clay over sections of logs, and they were generally 22″ long and tapered in width.

Repairs on this pantile roof were made with new tiles held in place with metal hangers. (Main Building, Ellis Island, New York)

The plain or flat rectangular tiles most commonly used from the 17th through the beginning of the 19th century measured about 10″ by 6″ by ½″, and had two holes at one end for a nail or peg fastener. Sometimes mortar was applied between the courses to secure the tiles in a heavy wind.

In the mid-19th century, tile roofs were often replaced by sheet-metal roofs, which were lighter and easier to install and maintain. However, by the turn of the century, the Romanesque Revival and Mission style buildings created a new demand and popularity for this picturesque roofing material.

Slate: Another practice settlers brought to the New World was slate roofing. Evidence of roofing slates have been found also among the ruins of mid-17th-century Jamestown. But because of the cost and the time required to obtain the material, which was mostly imported from Wales, the use of slate was initially limited. Even in Philadelphia (the second largest city in the English-speaking world at the time of the Revolution) slates were so rare that "The Slate Roof House" distinctly referred to William Penn's home built late in the 1600s. Sources of native slate were known to exist along the eastern seaboard from Maine to Virginia, but difficulties in inland transportation limited its availability to the cities, and contributed to its expense. Welsh slate continued to be imported until the development of canals and railroads in the mid-19th century made American slate more accessible and economical.

Slate was popular for its durability, fireproof qualities, and

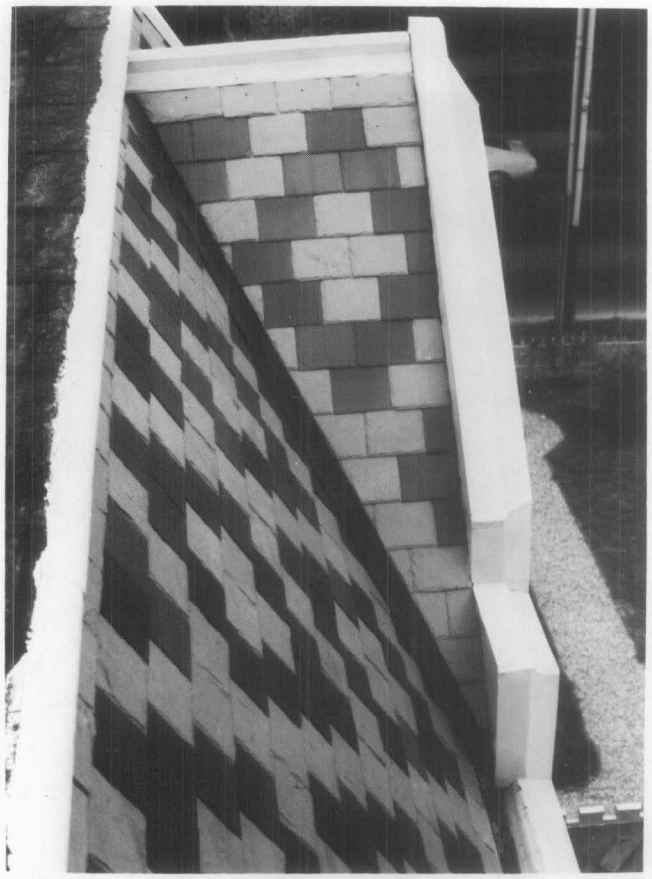

The Victorians loved to used different colored slates to create decorative patterns on their roofs, an effect which cannot be easily duplicated by substitute materials. Before any repair work on a roof such as this, the slate sizes, colors, and position of the patterning should be carefully recorded to assure proper replacement. (Ebenezer Maxwell Mansion, Philadelphia, Pennsylvania, photo courtesy of William D. Hershey)

Replacement of particular historic details is important to the individual historic character of a roof, such as the treatment at the eaves of this rounded butt wood shingle roof. Also note that the surface of the roof was carefully sloped to drain water away from the side of the dormer. In the restoration, this function was augmented with the addition of carefully concealed modern metal flashing. (Mount Vernon, Virginia)

Galvanized sheet-metal shingles imitating the appearance of pantiles remained popular from the second half of the 19th century into the 20th century. (Episcopal Church, now the Jerome Historical Society Building, Jerome, Arizona, 1927)

aesthetic potential. Because slate was available in different colors (red, green, purple, and blue-gray), it was an effective material for decorative patterns on many 19th-century roofs (Gothic and Mansard styles). Slate continued to be used well into the 20th century, notably on many Tudor revival style buildings of the 1920s.

Shingles: Wood shingles were popular throughout the country in all periods of building history. The size and shape of the shingles as well as the detailing of the shingle roof differed according to regional craft practices. People within particular regions developed preferences for the local species of wood that most suited their purposes. In New England and the Delaware Valley, white pine was frequently used: in the South, cypress and oak; in the far west, red cedar or redwood. Sometimes a protective coating was applied to increase the durability of the shingle such as a mixture of brick dust and fish oil, or a paint made of red iron oxide and linseed oil.

Commonly in urban areas, wooden roofs were replaced with more fire resistant materials, but in rural areas this was not a major concern. On many Victorian country houses, the practice of wood shingling survived the technological advances of metal roofing in the 19th century, and near the turn of the century enjoyed a full revival in its namesake, the Shingle Style. Colonial revival and the Bungalow styles in the 20th century assured wood shingles a place as one of the most fashionable, domestic roofing materials.

Metal: Metal roofing in America is principally a 19th-century phenomenon. Before then the only metals commonly used were lead and copper. For example, a lead roof covered "Rosewell," one of the grandest mansions in 18th-century Virginia. But more often, lead was used for protective flashing. Lead, as well as copper, covered roof surfaces where wood, tile, or slate shingles were inappropriate because of the roof's pitch or shape.

Copper with standing seams covered some of the more notable early American roofs including that of Christ Church (1727–1744) in Philadelphia. Flat-seamed copper was used on many domes and cupolas. The copper sheets were imported from England until the end of the 18th century when facilities for rolling sheet metal were developed in America.

Sheet iron was first known to have been manufactured here by the Revolutionary War financier, Robert Morris, who had a rolling mill near Trenton, New Jersey. At his mill Morris produced the roof of his own Philadelphia mansion, which he started in 1794. The architect Benjamin H. Latrobe used sheet iron to replace the roof on Princeton's "Nassau Hall," which had been gutted by fire in 1802.

The method for corrugating iron was originally patented in England in 1829. Corrugating stiffened the sheets, and allowed greater span over a lighter framework, as well as reduced installation time and labor. In 1834 the American architect William Strickland proposed corrugated iron to cover his design for the market place in Philadelphia.

Galvanizing with zinc to protect the base metal from rust was developed in France in 1837. By the 1850s the material was used on post offices and customhouses, as well as on train sheds and factories. In 1857 one of the first metal roofs in the

Repeated repair with asphalt, which cracks as it hardens, has created a blistered surface on this sheet-metal roof and built-in gutter, which will retain water. Repairs could be made by carefully heating and scraping the surface clean, repairing the holes in the metal with a flexible mastic compound or a metal patch, and coating the surface with a fibre paint. (Roane County Courthouse, Kingston, Tennessee, photo courtesy of Building Conservation Technology, Inc.)

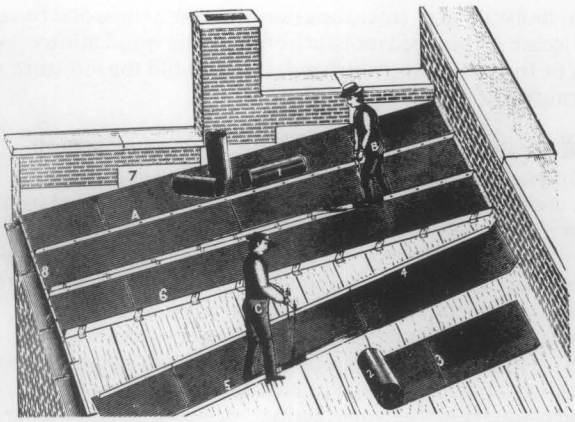

A Chicago firm's catalog dated 1896 illustrates a method of unrolling, turning the edges, and finishing the standing seam on a metal roof.

Tin shingles, commonly embossed to imitate wood or tile, or with a decorative design, were popular as an inexpensive, textured roofing material. These shingles $8^3/_8$ inch by $12^1/_2$ inch on the exposed surface) were designed with interlocking edges, but they have been repaired by surface nailing, which may cause future leakage. (Ballard House, Yorktown, Virgina, photo by Gordie Whittington, National Park Service)

South was installed on the U.S. Mint in New Orleans. The Mint was thereby "fireproofed" with a 20-gauge galvanized, corrugated iron roof on iron trusses.

Tin-plate iron, commonly called "tin roofing," was used extensively in Canada in the 18th century, but it was not as common in the United States until later. Thomas Jefferson was an early advocate of tin roofing, and he installed a standing-seam tin roof on "Monticello" (ca. 1770–1802). The Arch Street Meetinghouse (1804) in Philadelphia had tin shingles laid in a herringbone pattern on a "piazza" roof.

However, once rolling mills were established in this country, the low cost, light weight, and low maintenance of tin plate made it the most common roofing material. Embossed tin shingles, whose surfaces created interesting patterns, were popular throughout the country in the late 19th century. Tin roofs were kept well-painted, usually red; or, as the architect A. J. Davis suggested, in a color to imitate the green patina of copper.

Terne plate differed from tin plate in that the iron was dipped in an alloy of lead and tin, giving it a duller finish. Historic, as well as modern, documentation often confuses the two, so much that it is difficult to determine how often actual "terne" was used.

Zinc came into use in the 1820s, at the same time tin plate was becoming popular. Although a less expensive substitute for lead, its advantages were controversial, and it was never widely used in this country.

Other Materials: Asphalt shingles and roll roofing were used in the 1890s. Many roofs of asbestos, aluminum, stainless steel, galvinized steel, and lead-coated copper may soon have historic values as well. Awareness of these and other traditions of roofing materials and their detailing will contribute to more sensitive preservation treatments.

Locating the Problem

Failures of Surface Materials

When trouble occurs, it is important to contact a professional, either an architect, a reputable roofing contractor, or a craftsman familiar with the inherent characteristics of the particular historic roofing system involved. These professionals may be able to advise on immediate patching procedures and help plan more permanent repairs. A thorough examination of the roof should start with an appraisal of the existing condition and quality of the roofing material itself. Particular attention should be given to any southern slope because year-round exposure to direct sun may cause it to break down first.

Wood: Some historic roofing materials have limited life expectancies because of normal organic decay and "wear." For example, the flat surfaces of wood shingles erode from exposure to rain and ultraviolet rays. Some species are more hardy than others, and heartwood, for example, is stronger and more durable than sapwood.

Ideally, shingles are split with the grain perpendicular to

the surface. This is because if shingles are sawn across the grain, moisture may enter the grain and cause the wood to deteriorate. Prolonged moisture on or in the wood allows moss or fungi to grow, which will further hold the moisture and cause rot.

Metal: Of the inorganic roofing materials used on historic buildings, the most common are perhaps the sheet metals: lead, copper, zinc, tin plate, terne plate, and galvanized iron. In varying degrees each of these sheet metals are likely to deteriorate from chemical action by pitting or streaking. This can be caused by airborn pollutants; acid rainwater; acids from lichen or moss; alkalis found in lime mortars or portland cement, which might be on adjoining features and washes down on the roof surface; or tannic acids from adjacent wood sheathings or shingles made of red cedar or oak.

Corrosion from "galvanic action" occurs when dissimilar metals, such as copper and iron, are used in direct contact. Corrosion may also occur even though the metals are physically separated; one of the metals will react chemically against the other in the presence of an electrolyte such as rainwater. In roofing, this situation might occur when either a copper roof is decorated with iron cresting, or when steel nails are used in copper sheets. In some instances the corrosion can be prevented by inserting a plastic insulator between the dissimilar materials. Ideally, the fasteners should be a metal sympathetic to those involved.

Iron rusts unless it is well-painted or plated. Historically this problem was avoided by use of tin plating or galvinizing. But this method is durable only as long as the coating remains intact. Once the plating is worn or damaged, the exposed iron will rust. Therefore, any iron-based roofing material needs to be undercoated, and its surface needs to be kept well-painted to prevent corrosion.

One cause of sheet metal deterioration is fatigue. Depending upon the size and the gauge of the metal sheets, wear and metal failure can occur at the joints or at any protrusions in the sheathing as a result from the metal's alternating movement to thermal changes. Lead will tear because of "creep," or the gravitational stress that causes the material to move down the roof slope.

Slate: Perhaps the most durable roofing materials are slate and tile. Seemingly indestructable, both vary in quality. Some slates are hard and tough without being brittle. Soft slates are more subject to erosion and to attack by airborne and rainwater chemicals, which cause the slates to wear at nail holes, to delaminate, or to break. In winter, slate is very susceptible to breakage by ice, or ice dams.

Tile: Tiles will weather well, but tend to crack or break if hit, as by tree branches, or if they are walked on improperly. Like slates, tiles cannot support much weight. Low quality tiles that have been insufficiently fired during manufacture, will craze and spall under the effects of freeze and thaw cycles on their porous surfaces.

Failures of Support Systems

Once the condition of the roofing material has been determined, the related features and support systems should be examined on the exterior and on the interior of the roof. The gutters and downspouts need periodic cleaning and maintenance since a variety of debris fill them, causing water to back up and seep under roofing units. Water will eventually cause fasteners, sheathing, and roofing structure to deteriorate. During winter, the daily freeze-thaw cycles can cause ice floes to develop under the roof surface. The pressure from these ice floes will dislodge the roofing material, especially slates, shingles, or tiles. Moreover, the buildup of ice dams above the gutters can trap enough moisture to rot the sheathing or the structural members.

Many large public buildings have built-in gutters set within the perimeter of the roof. The downspouts for these gutters may run within the walls of the building, or drainage may be through the roof surface or through a parapet to exterior downspouts. These systems can be effective if properly maintained; however, if the roof slope is inadequate for good runoff, or if the traps are allowed to clog, rainwater will form pools on the roof surface. Interior downspouts can collect debris and thus back up, perhaps leaking water into the surrounding walls. Exterior downspouts may fill with water, which in cold weather may freeze and crack the pipes. Conduits from the built-in gutter to the exterior downspout may also leak water into the surrounding roof structure or walls.

Failure of the flashing system is usually a major cause of roof deterioration. Flashing should be carefully inspected for failure caused by either poor workmanship, thermal stress, or metal deterioration (both of flashing material itself and of the fasteners). With many roofing materials, the replacement of flashing on an existing roof is a major operation, which may require taking up large sections of the roof surface. Therefore, the installation of top quality flashing material on

This detail shows slate delamination caused by a combination of weathering and pollution. In addition, the slates have eroded around the repair nails, incorrectly placed in the exposed surface of the slates. (Lower Pontalba Building, New Orleans, photo courtesy of Building Conservation Technology, Inc.)

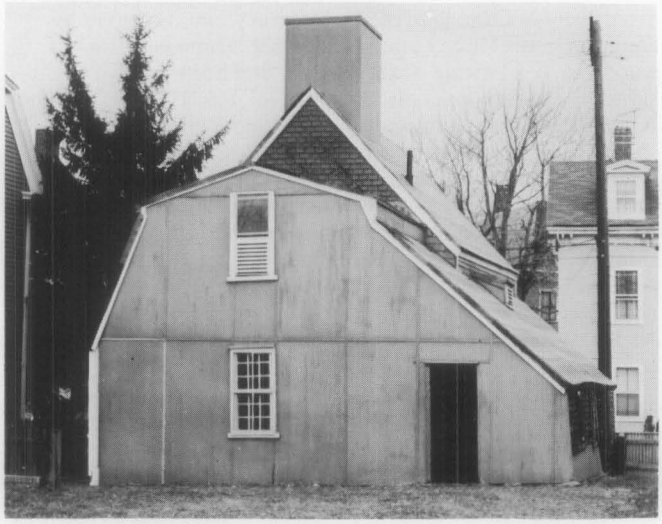

Temporary stabilization or "mothballing" with materials such as plywood and building paper can protect the roof of a project until it can be properly repaired or replaced. (Narbonne House, Salem, Massachusetts)

These two views of the same house demonstrate how the use of a substitute material can drastically affect the overall character of a structure. The textural interest of the original tile roof was lost with the use of asphalt shingles. Recent preservation efforts are replacing the tile roof. (Frank House, Kearney, Nebraska, photo courtesy of the Nebraska State Historical Society, Lincoln, Nebraska)

a new or replaced roof should be a primary consideration. *Remember, some roofing and flashing materials are not compatible.*

Roof fasteners and clips should also be made of a material compatible with all other materials used, or coated to prevent rust. For example, the tannic acid in oak will corrode iron nails. Some roofs such as slate and sheet metals may fail if nailed too rigidly.

If the roof structure appears sound and nothing indicates recent movement, the area to be examined most closely is the roof substrate—the sheathing or the battens. The danger spots would be near the roof plates, under any exterior patches, at the intersections of the roof planes, or at vertical surfaces such as dormers. Water penetration, indicating a breach in the roofing surface or flashing, should be readily apparent, usually as a damp spot or stain. Probing with a small pen knife may reveal any rot which may indicate previously undetected damage to the roofing membrane. Insect infestation evident by small exit holes and frass (a sawdust-like debris) should also be noted. Condensation on the underside of the roofing is undesirable and indicates improper ventilation. Moisture will have an adverse effect on any roofing material; a good roof stays dry inside and out.

Repair or Replace

Understanding potential weaknesses of roofing material also requires knowledge of repair difficulties. Individual slates can be replaced normally without major disruption to the rest of the roof, but replacing flashing on a slate roof can require substantial removal of surrounding slates. If it is the substrate or a support material that has deteriorated, many surface materials such as slate or tile can be reused if handled carefully during the repair. Such problems should be evaluated at the outset of any project to determine if the roof can be effectively patched, or if it should be completely replaced.

Will the repairs be effective? Maintenance costs tend to multiply once trouble starts. As the cost of labor escalates, repeated repairs could soon equal the cost of a new roof.

The more durable the surface is initially, the easier it will be to maintain. Some roofing materials such as slate are expensive to install, but if top quality slate and flashing are used, it will last 40–60 years with minimal maintenance. Although the installation cost of the roof will be high, low maintenance needs will make the lifetime cost of the roof less expensive.

Historical Research

In a restoration project, research of documents and physical investigation of the building usually will establish the roof's history. Documentary research should include any original plans or building specifications, early insurance surveys, newspaper descriptions, or the personal papers and files of people who owned or were involved in the history of the building. Old photographs of the building might provide evidence of missing details.

Along with a thorough understanding of any written history of the building, a physical investigation of the roofing and its structure may reveal information about the roof's construction history. Starting with an overall impression of the structure, are there any changes in the roof slope, its configuration, or roofing materials? Perhaps there are obvious patches or changes in patterning of exterior brickwork where a gable roof was changed to a gambrel, or where a whole upper story was added. Perhaps there are obvious stylistic changes in the roof line, dormers, or ornamentation. These observations could help one understand any important alteration, and could help establish the direction of further investigation.

Because most roofs are physically out of the range of careful scrutiny, the "principle of least effort" has probably limited the extent and quality of previous patching or replacing, and usually considerable evidence of an earlier roof surface remains. Sometimes the older roof will be found as an underlayment of the current exposed roof. Original roofing may still be intact in awkward places under later features on a roof. Often if there is any unfinished attic space, remnants of roofing may have been dropped and left when the roof was being built or repaired. If the configuration of the roof has been changed, some of the original material might still be in place under the existing roof. Sometimes whole sections of the roof and roof framing will have been left intact under the higher roof. The profile and/or flashing of the earlier roof may be apparent on the interior of the walls at the level of the alteration. If the sheathing or lathing appears to have survived changes in the roofing surface, they may contain evidence of the roofing systems. These may appear either as dirt marks, which provide "shadows" of a roofing material, or as nails broken or driven down into the wood, rather than pulled out during previous alterations or repairs. Wooden headers in the roof framing may indicate that earlier chimneys or skylights have been removed. Any metal ornamentation that might have existed may be indicated by anchors or unusual markings along the ridge or at other edges of the roof. This primary

evidence is essential for a full understanding of the roof's history.

Caution should be taken in dating early "fabric" on the evidence of a single item, as recycling of materials is not a mid-20th-century innovation. Carpenters have been reusing materials, sheathing, and framing members in the interest of economy for centuries. Therefore, any analysis of the materials found, such as nails or sawmarks on the wood, requires an accurate knowledge of the history of local building practices before any final conclusion can be accurately reached. It is helpful to establish a sequence of construction history for the roof and roofing materials; any historic fabric or pertinent evidence in the roof should be photographed, measured, and recorded for future reference.

During the repair work, useful evidence might unexpectedly appear. It is essential that records be kept of any type of work on a historic building, before, during, and after the project. Photographs are generally the easiest and fastest method, and should include overall views and details at the gutters, flashing, dormers, chimneys, valleys, ridges, and eaves. All photographs should be immediately labeled to insure accurate identification at a later date. Any patterning or design on the roofing deserves particular attention. For example, slate roofs are often decorative and have subtle changes in size, color, and texture, such as a gradually decreasing coursing length from the eave to the peak. If not carefully noted before a project begins, there may be problems in replacing the surface. The standard reference for this phase of the work is *Recording Historic Buildings,* compiled by Harley J. McKee for the Historic American Buildings Survey, National Park Service, Washington, D.C., 1970.

Replacing the Historic Roofing Material

Professional advice will be needed to assess the various aspects of replacing a historic roof. With some exceptions, most historic roofing materials are available today. If not, an architect or preservation group who has previously worked with the same type material may be able to recommend suppliers. Special roofing materials, such as tile or embossed metal shingles, can be produced by manufacturers of related products that are commonly used elsewhere, either on the exterior or interior of a structure. With some creative thinking and research, the historic materials usually can be found.

Because of the roof's visibility, the slate detailing around the dormers is important to the character of this structure. Note how the slates swirl from a horizontal pattern on the main roof to a diamond pattern on the dormer roofs and side walls. (18th and Que Streets, NW, Washington, D.C.)

Craft Practices: Determining the craft practices used in the installation of a historic roof is another major concern in roof restoration. Early builders took great pride in their work, and experience has shown that the "rustic" or irregular designs commercially labled "Early American" are a 20th-century invention. For example, historically, wood shingles underwent several distinct operations in their manufacture including splitting by hand, and smoothing the surface with a draw knife. In modern nomenclature, the same item would be a "tapersplit" shingle which has been dressed. Unfortunately, the rustic appearance of today's commercially available "handsplit" and re-sawn shingle bears no resemblance to the hand-made roofing materials used on early American buildings.

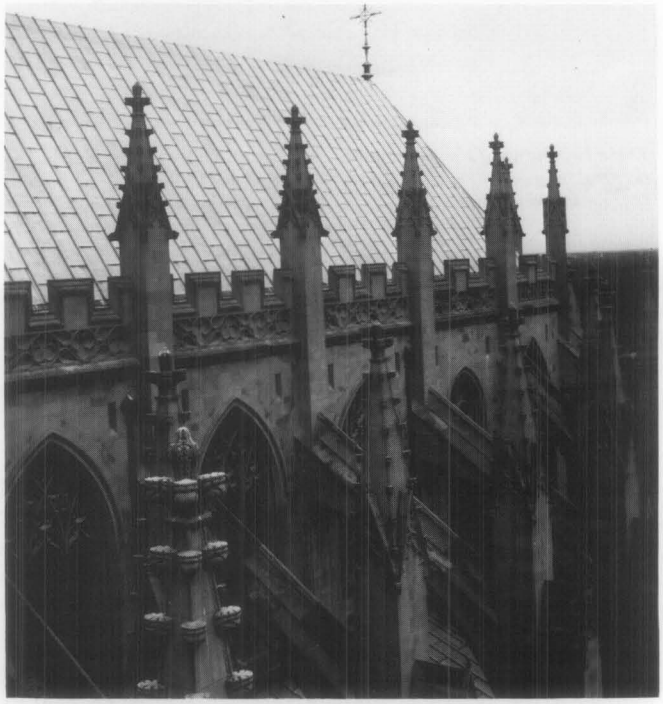

Good design and quality materials for the roof surface, fastenings, and flashing minimize roofing failures. This is essential on roofs such as on the National Cathedral where a thorough maintenance inspection and minor repairs cannot be done easily without special scaffolding. However, the success of the roof on any structure depends on frequent cleaning and repair of the gutter system. (Washington, D.C., photo courtesy of John Burns, A.I.A.)

Early craftsmen worked with a great deal of common sense; they understood their materials. For example they knew that wood shingles should be relatively narrow; shingles much wider than about 6" would split when walked on, or they may curl or crack from varying temperature and moisture. It is important to understand these aspects of craftsmanship, remembering that people wanted their roofs to be weather-tight and to last a long time. The recent use of "mother-goose" shingles on historic structures is a gross underestimation of the early craftsman's skills.

Supervision: Finding a modern craftsman to reproduce historic details may take some effort. It may even involve some special instruction to raise his understanding of certain historic craft practices. At the same time, it may be pointless (and expensive) to follow historic craft practices in any construction that will not be visible on the finished product. But if the roofing details are readily visible, their appearance should be based on architectural evidence or on historic prototypes. For instance, the spacing of the seams on a standing-seam metal roof will affect the building's overall scale and should therefore match the original dimensions of the seams.

Many older roofing practices are no longer performed because of modern improvements. Research and review of specific detailing in the roof with the contractor before beginning the project is highly recommended. For example, one early craft practice was to finish the ridge of a wood shingle roof with a roof "comb"—that is, the top course of one slope of the roof was extended uniformly beyond the peak to shield the ridge, and to provide some weather protection for the raw horizontal edges of the shingles on the other slope. If the "comb" is known to have been the correct detail, it should be used. Though this method leaves the top course vulnerable to the weather, a disguised strip of flashing will strengthen this weak point.

Detail drawings or a sample mock-up will help ensure that the contractor or craftsman understands the scope and special requirements of the project. It should never be assumed that the modern carpenter, slater, sheet metal worker, or roofer will know all the historic details. Supervision is as important as any other stage of the process.

Special problems inherent in the design of an elaborate historic roof can be controlled through the use of good materials and regular maintenance. The shape and detailing are essential elements of the building's historic character, and should not be modified, despite the use of alternative surface materials. (Gamwell House, Bellingham, Washington)

Alternative Materials

The use of the historic roofing material on a structure may be restricted by building codes or by the availability of the materials, in which case an appropriate alternative will have to be found.

Some municipal building codes allow variances for roofing materials in historic districts. In other instances, individual variances may be obtained. Most modern heating and cooking is fueled by gas, electricity, or oil—none of which emit the hot embers that historically have been the cause of roof fires. Where wood burning fireplaces or stoves are used, spark arrestor screens at the top of the chimneys help to prevent flaming material from escaping, thus reducing the number of fires that start at the roof. In most states, insurance rates have been equalized to reflect revised considerations for the risks involved with various roofing materials.

In a rehabilitation project, there may be valid reasons for replacing the roof with a material other than the original. The historic roofing may no longer be available, or the cost of obtaining specially fabricated materials may be prohibitive. But the decision to use an alternative material should be weighed carefully against the primary concern to keep the historic character of the building. If the roof is flat and is not visible from any elevation of the building, and if there are advantages to substituting a modern built-up composition roof for what might have been a flat metal roof, then it may make better economic and construction sense to use a modern roofing method. But if the roof is readily visible, the alternative material should match as closely as possible the scale, texture, and coloration of the historic roofing material.

Asphalt shingles or ceramic tiles are common substitute materials intended to duplicate the appearance of wood shingles, slates, or tiles. Fire-retardant, treated wood shingles are currently available. The treated wood tends, however, to be brittle, and may require extra care (and expense) to install. In some instances, shingles laid with an interlay of fire-retardent building paper may be an acceptable alternative.

Lead-coated copper, terne-coated steel, and aluminum/zinc-coated steel can successfully replace tin, terne plate, zinc, or lead. Copper-coated steel is a less expensive (and less durable) substitute for sheet copper.

The search for alternative roofing materials is not new. As early as the 18th century, fear of fire cause many wood shingle or board roofs to be replaced by sheet metal or clay tile. Some historic roofs were failures from the start, based on over-ambitious and naive use of materials as they were first developed. Research on a structure may reveal that an inadequately designed or a highly combustible roof was replaced early in its history, and therefore restoration of a later roof material would have a valid precedent. In some cities, the substitution of sheet metal on early row houses occurred as soon as the rolled material became available.

Cost and ease of maintenance may dictate the substitution of a material wholly different in appearance from the original. The practical problems (wind, weather, and roof pitch) should be weighed against the historical consideration of scale, texture, and color. Sometimes the effect of the alternative material will be minimal. But on roofs with a high degree of visibility and patterning or texture, the substitution may seriously alter the architectural character of the building.

Temporary Stabilization

It may be necessary to carry out an immediate and temporary stabilization to prevent further deterioration until research can determine how the roof should be restored or rehabilitated, or until funding can be provided to do a proper job. A simple covering of exterior plywood or roll roofing might provide adequate protection, but any temporary covering should be applied with caution. One should be careful not to overload the roof structure, or to damage or destroy historic evidence or fabric that might be incorporated into a new roof at a later date. In this sense, repairs with caulking or bituminous patching compounds should be recognized as potentially harmful, since they are difficult to remove, and at their best, are very temporary.

Precautions

The architect or contractor should warn the owner of any precautions to be taken against the specific hazards in installing the roofing material. Soldering of sheet metals, for instance, can be a fire hazard, either from the open flame or from overheating and undected smoldering of the wooden substrate materials.

Thought should be given to the design and placement of any modern roof appurtenances such as plumbing stacks, air vents, or TV antennas. Consideration should begin with the placement of modern plumbing on the interior of the building, otherwise a series of vent stacks may pierce the roof membrane at various spots creating maintenance problems as well as aesthetic ones. Air handling units placed in the attic space will require vents which, in turn, require sensitive design. Incorporating these in unused chimneys has been very successful

in the past.

Whenever gutters and downspouts are needed that were not on the building historically, the additions should be made as unobtrusively as possible, perhaps by painting them out with a color compatible with the nearby wall or trim.

Maintenance

Although a new roof can be an object of beauty, it will not be protective for long without proper maintenance. At least twice a year, the roof should be inspected against a checklist. All changes should be recorded and reported. Guidelines should be established for any foot traffic that may be required for the maintenance of the roof. Many roofing materials should not be walked on at all. For some—slate, asbestos, and clay tile—a self-supporting ladder might be hung over the ridge of the roof, or planks might be spanned across the roof surface. Such items should be specifically designed and kept in a storage space accessible to the roof. If exterior work ever requires hanging scaffolding, use caution to insure that the anchors do not penetrate, break, or wear the roofing surface, gutters, or flashing.

Any roofing system should be recognized as a membrane that is designed to be self-sustaining, but that can be easily damaged by intrusions such as pedestrian traffic or fallen tree branches. Certain items should be checked at specific times. For example, gutters tend to accumulate leaves and debris during the spring and fall and after heavy rain. Hidden gutter screening both at downspouts and over the full length of the gutter could help keep them clean. The surface material would require checking after a storm as well. Periodic checking of the underside of the roof from the attic after a storm or winter freezing may give early warning of any leaks. Generally, damage from water or ice is less likely on a roof that has good flashing on the outside and is well ventilated and insulated on the inside. Specific instructions for the maintenance of the different roof materials should be available from the architect or contractor.

Summary

The essential ingredients for replacing and maintaining a historic roof are:

- Understanding the historic character of the building and being sympathetic to it.
- Careful examination and recording of the existing roof and any evidence of earlier roofs.
- Consideration of the historic craftsmanship and detailing and implementing them in the renewal wherever visible.
- Supervision of the roofers or maintenance personnel to assure preservation of historic fabric and proper understanding of the scope and detailing of the project.
- Consideration of alternative materials where the original cannot be used.
- Cyclical maintenance program to assure that the staff understands how to take care of the roof and of the particular trouble spots to safeguard.

With these points in mind, it will be possible to preserve the architectural character and maintain the physical integrity of the roofing on a historic building.

This Preservation Brief was written by Sarah M. Sweetser, Architectural Historian, Technical Preservation Services Division. Much of the technical information was based upon an unpublished report prepared under contract for this office by John G. and Diana S. Waite. Some of the historical information was from Charles E. Peterson, FAIA, "American Notes," *Journal of the Society of Architectural Historians.*

The illustrations for this brief not specifically credited are from the files of the Technical Preservation Services Division.

This publication was prepared pursuant to Executive Order 11593, "Protection and Enhancement of the Cultural Environment," which directs the Secretary of the Interior to "develop and make available to Federal agencies and State and local governments information concerning professional methods and techniques for preserving, improving, restoring and maintaining historic properties." The Brief has been developed under the technical editorship of Lee H. Nelson, AIA, Chief, Preservation Assistance Division, National Park Service, U.S. Department of the Interior, Washington, D.C. 20240. Comments on the usefulness of this information are welcome and can be sent to Mr. Nelson at the above address. This publication is not copyrighted and can be reproduced without penalty. Normal procedures for credit to the author and the National Park Service are appreciated. **February 1978.**

Decorative features such as cupolas require extra maintenance. The flashing is carefully detailed to promote run-off, and the wooden ribbing must be kept well-painted. This roof surface, which was originally tin plate, has been replaced with lead-coated copper for maintenance purposes. (Lyndhurst, Tarrytown, New York, photo courtesy of the National Trust for Historic Preservation)

Additional readings on the subject of roofing are listed below.

Boaz, Joseph N., ed. *Architectural Graphic Standards.* New York: John Wiley and Sons, Inc., 1970. (Modern roofing types and detailing)

Briggs, Martin S. *A Short History of the Building Crafts.* London: Oxford University Press, 1925. (Descriptions of historic roofing materials)

Bulletin of the Association for Preservation Technology. Vol. 2 (nos. 1-2) 1970. (Entirely on roofing)

Holstrom, Ingmar; and Sandstrom, Christina. *Maintenance of Old Buildings: Preservation from the Technical and Antiquarian Standpoint.* Stockholm: National Swedish Building Research, 1972. (Contains a section on roof maintenance problems)

Insall, Donald. *The Care of Old Buildings Today.* London: The Architectural Press, 1972. (Excellent guide to some problems and solutions for historic roofs)

Labine, R.A. Clem. "Repairing Slate Roofs." *The Old House Journal* 3 (no. 12, Dec. 1975): 6-7.

Lefer, Henry. "A Birds-eye View." *Progressive Architecture.* (Mar. 1977), pp. 88-92. (Article on contemporary sheet metal)

National Slate Association. *Slate Roofs.* Reprint of 1926 edition, now available from the Vermont Structural Slate Co., Inc., Fairhaven, VT 05743. (An excellent reference for the many designs and details of slate roofs)

Peterson, Charles E. "Iron in Early American Roofs." *The Smithsonian Journal of History* 3 (no. 3). Edited by Peter C. Welsh. Washington, D.C.: Smithsonian Institution, 1968, pp. 41-76.

Waite, Diana S. *Nineteenth Century Tin Roofing and its Use at Hyde Hall.* Albany: New York State Historic Trust, 1971.

——. "Roofing for Early America." *Building Early America.* Edited by Charles E. Peterson. Radnor, Penn.: Chilton Book Co., 1976.

NATIONAL PARK SERVICE

STANDARDS FOR REHABILITATION AND GUIDELINES FOR REHABILITATING HISTORIC BUILDINGS

EXTERIOR FEATURES

roofs

HISTORICAL OVERVIEW

Identify Protect Repair Replace Missing feature Alterations/Additions

Identify, Retain and Preserve

RECOMMENDED

Identifying, retaining, and preserving roofs--and their functional and decorative features--that are important in defining the overall historic character of the building. This includes the roof's shape, such as hipped, gambrel, and mansard; decorative features such as cupolas, cresting chimneys, and weathervanes; and roofing material such as slate, wood, clay tile, and metal, as well as its size, color, and patterning.

These slate and copper mansard roofs are distinctive features of their urban setting and need to be retained and repaired, or if too deteriorated to repair, replaced in kind to match. Photo: NPS files.

NOT RECOMMENDED

Radically changing, damaging, or destroying roofs which are important in defining the overall historic character of the building so that, as a result, the character is diminished.

Removing a major portion of the roof or roofing material that is repairable, then reconstructing it with new material in order to create a uniform, or "improved" appearance.

Changing the configuration of a roof by adding new features such as dormer windows, vents, or skylights so that the historic character is diminished.

Stripping the roof of sound historic material such as slate, clay tile, wood, and architectural metal.

Applying paint or other coatings to roofing material which has been historically uncoated.

top

-GUIDELINES-

The Approach

Exterior Materials
Masonry
Wood
Architectural Metals

Exterior Features
Roofs
Windows
Entrances + Porches
Storefronts

Interior Features
Structural System
Spaces/Features/Finishes
Mechanical Systems

Site

Setting

Special Requirements
Energy Efficiency
New Additions
Accessibility
Health + Safety

THE STANDARDS

Protect and Maintain

RECOMMENDED

Protecting and maintaining a roof by cleaning the gutters and downspouts and replacing deteriorated flashing. Roof sheathing should also be checked for proper venting to prevent moisture condensation and water penetration; and to ensure that materials are free from insect infestation.

This new step flashing overlaps the next in a downward slope to shed water draining down the face of the chimney and the roof. Photo: © John Leeke.

Providing adequate anchorage for roofing material to guard against wind damage and moisture penetration.

Protecting a leaking roof with plywood and building paper until it can be properly repaired.

NOT RECOMMENDED

Failing to clean and maintain gutters and downspouts properly so that water and debris collect and cause damage to roof fasteners, sheathing, and the underlying structure.

Allowing roof fasteners, such as nails and clips to corrode so that roofing material is subject to accelerated deterioration.

Permitting a leaking roof to remain unprotected so that accelerated deterioration of historic building materials–masonry, wood, plaster, paint and structural members–occurs.

top

Repair

RECOMMENDED

Repairing a roof by reinforcing the historicmaterials which comprise roof features. Repairs will also generally include the limited replacement in kind--or with compatible substitute material–of those extensively deteriorated or missing parts of features when there are surviving prototypes such as cupola louvers, dentils, dormer roofing; or slates, tiles, or wood shingles on a main roof.

After removing the deteriorated slate and sliding the new slate into place, it is secured with a copper nail. A copper bib

(shown here) is formed to protect the newly created nail hole. Finally, a slate hammer is used to push the bib in place over the nail head. Photo: Jeffrey S. Levine.

NOT RECOMMENDED

Replacing an entire roof feature such as a cupolaor dormer when repair of the historic materials and limited replacement of deteriorated or missing parts are appropriate.

Failing to reuse intact slate or tile when only the roofing substrate needs replacement.

Using a substitute material for the replacement part that does not convey the visual appearance of the surviving parts of the roof or that is physically or chemically incompatible.

top

Replace

RECOMMENDED

Replacing in kind an entire feature of the roof that is too deteriorated to repair–if the overall form and detailing are still evident–using the physicalevidence as a model to reproduce the feature. Examples can include a large section of roofing, or a dormer or chimney. If using the same kind of material is not technically or economically feasible, then a compatible substitute material may be considered.

NOT RECOMMENDED

Removing a feature of the roof that is unrepairable, such as a chimney or dormer, and not replacing it; or replacing it with a new feature that does not convey the same visual appearance

Asphalt shingles are an incompatible replacement substitute for the original Spanish clay tiles. Photo: NPS files.

top

The following work is highlighted to indicate that it represents the particularly complex technical or design aspects of Rehabilitation projects and should only be considered after the preservation concerns listed above have been addressed.

Design for the Replacement of Missing Historic

Features

RECOMMENDED

Designing and constructing a new feature when the historic feature is completely missing, such as chimney or cupola. It may be an accurate restoration using historical, pictorial, and physical documentation; or be a new design that is compatible with the size, scale, material, and color of the historic building.

NOT RECOMMENDED

Creating a false historical appearance because the replaced feature is based on insufficient historical, pictorial, and physical documentation.

Introducing a new roof feature that is incompatible in size, scale, material and color.

top

The following work is highlighted to indicate that it represents the particularly complex technical or design aspects of Rehabilitation projects and should only be considered after the preservation concerns listed above have been addressed.

Alterations/Additions for the New Use

RECOMMENDED

Installing mechanical and service equipment on the roof such as air conditioning, transformers, or solar collectors when required for the new use so that they are inconspicuous from the public right-of-way and do not damage or obscure character-defining features.

Designing additions to roofs such as residential, office, or storage spaces; elevator housing; decks and terraces; or dormers or skylights when required by the new use so that they are inconspicuous from the public right-of-way and do not damage or obscure character-defining features.

NOT RECOMMENDED

Installing mechanical or service equipment so that it damages or obscures character-defining features; or is conspicuous from the public right-of-way.

Radically changing a character-defining roof shape or damaging or destroying character-defining roofing material as a result of incompatible design or improper installation techniques.

Lake Worth, Florida. The Art of Florida Living.sm

City Of Lake Worth
Department for Community Sustainability
Planning, Zoning and Historic Preservation Division
1900 Second Avenue North · Lake Worth · Florida 33461· Phone: 561-586-1687

MEMORANDUM DATE: May 4, 2016

AGENDA DATE: May 11, 2016

TO: Chair and Members of the Historic Resources Preservation Board

RE: **331 Cornell Drive**

FROM: Aimee N. Sunny, Preservation Planning Coordinator
Department for Community Sustainability

TITLE: HRPB Project Number 16-00100075: Consideration of a Retroactive Certificate of Appropriateness (COA) for gate installation for the single-family structure located at **331 Cornell Drive**; PCN# 38-43-44-15-06-005-1770. The subject property was constructed c.1925 and is a contributing resource within the College Park Local Historic District.

OWNER/APPLICANT: Leigh Shinohara
331 Cornell Drive
Lake Worth, FL 33460

BACKGROUND:

The single-family structure at 331 Cornell Drive was constructed c. 1925 in a Mediterreanean Revival style. The property has public frontage on Cornell Drive to the north, and is located in close proximity to Dixie Highway. The building still retains most of its character defining features including wood double-hung windows, decorative front door surround, terra cotta barrel tile roof, and frame with textured stucco construction. The building has undergone few changes over time including two small additions, hurricane shutter installation, roof replacement in kind, and front door replacement with a compatible door. Although the original architectural plans for the building are not available in the City's property files, the file does have information from early property survey cards and permit records. Overall, the building retains a high degree of historic integrity of location, setting, materials, and design.

REQUEST:

In August 2015, a Code Compliance case was issued for the subject property for gate installation without an approved building permit or Certificate of Appropriateness. The Applicant is now requesting a retroactive Certificate of Appropriateness in order to install a 48" tall white ornamental gate constructed of "King Starboard" marine grade polyethylene.

COMPREHENSIVE PLAN CONSISTENCY:

It is the opinion of Staff that the project, as proposed, is not consistent with the Comprehensive Plan goals and objectives concerning historic preservation and housing due to the fact that the Applicant is proposing a change that will have an adverse effect on the historic integrity of the property. Specifically, the request is in conflict with these objectives:

Goal 1.4 Encourage preservation and rehabilitation of historic and natural resources and where appropriate restrict development that would damage or destroy these resources. (Objective 1.4.2)

Objective 3.2.5: To encourage the identification of historically significant housing, and to promote its preservation and rehabilitation as referenced by the Surveys of Historic Properties conducted for the City of Lake Worth.

Policy 3.2.5.1: Properties of special value for historic, architectural, cultural or aesthetic reasons will be restored and preserved through the enforcement of the City's Historic Preservation Ordinance to the extent feasible.

ANALYSIS:

Zoning

The proposed gate is not in compliance with the development requirements in the City's Zoning Code, Section 23.4-4 Fences, Walls, and Gates. Per the Code, "King Starboard," polyethylene, polymer, plastic, PVC, resin, or any similar type of fencing material is not permitted. The code does allow for many alternate types of historically compatible, authentic, material including wood, aluminum, wrought iron.

Historic Preservation

Staff has reviewed the documentation and materials provided in this application and outlined the applicable guidelines and standards found in the City's Historic Preservation Ordinance, detailed in Attachment 1 – Decision Criteria.

The National Park Service and Secretary of the Interior's Standards have very specific criteria regarding the rehabilitation of historic structures. Although the Standards do not specifically address gate design, the Standars do address the overall setting and historic integrity of a property. Specifically, Standards 2 and 9 apply in this situation:

Standard 2 - The historic character of a property will be retained and preserved. The removal of distinctive materials or alteration of features, spaces, and spatial relationships that characterize a property will be avoided.

Standard 9 - New additions, exterior alterations or related new construction shall not destroy historic materials that characterize the property. The new construction shall be differentiated from the old and shall be compatible with the massing, size, scale and architectural features to protect the historic integrity of the property and its environment.

It is the analysis of Staff that the project as proposed is not compatible with the review criteria set forth in the City's Land Development Regulations, Historic Preservation Ordinance, Section 23.5-4.

The Standards require that alterations to the overall setting and environment surrounding a historic structure also be compatible with the architectural style and design of the structure. The proposed polyethylene plastic gate is not compatible within the context of the 1920's Mediterranean style structure. Plastic is not an authentic material that was used for fences or gates during that time period. Typical gate materials would have included wood or wrought iron. The overall type of elaborate scrollwork design of the proposed gate is compatible with the decorative Mediterranean architectural style, however the specific detailing and thickness is not compatible. This specific gate has a large frame and thick decorative scrollwork that is not compatible with the look or appearance of historic wrought iron.

Public Comment
At the time of publication of this report, Staff has not received any public comment regarding this project.

CONSEQUENT ACTION:
Approve the application; approve the application with conditions; continue the hearing to a date certain to request additional information; or deny the application.

RECOMMENDATION:
Staff recommends that the Board deny the application as submitted, given that the retroactive gate application does not meet the Secretary of the Interior's Standards for Rehabilitation, does not meet the criteria set forth in the City of Lake Worth Land Development Regulations §23.5-4(k), and will have an adverse effect on the integrity, setting, environment, and character of the property.

Based on the issues outlined in the Applicant's Justification Statement, Staff is in support of the Applicant installing a gate on the property that is compliance with the Land Development Regulations and the Secretary of the Interior's Standards. Staff would recommend that the Applicant explore alternate, approved materials, and a compatible design with the Mediterranean Revival structure. A compatible, revised proposal could be reviewed administratively, and would not require HRPB approval.

POTENTIAL MOTION:

I MOVE TO **APPROVE** HRPB 16-00100075: Consideration of a retroactive Certificate of Appropriateness (COA) for gate installation for the subject property located at **331 Cornell Drive**, based upon the preponderance of competent substantial evidence.

I MOVE TO **DENY** HRPB 16-00100075: Consideration of a retroactive Certificate of Appropriateness (COA) for gate installation for the subject property located at **331 Cornell Drive** because the Applicant has not established by a preponderance of the evidence that the application is in compliance with the City of Lake Worth Land Development Regulations Section 23.5-4 and 23.4-4, the Secretary of the interiors Standards for the Rehabilitation of Historic Properties, and the City's Comprehensive Plan.

ATTACHMENTS:
1. Decision Criteria
2. Application Photographs
3. Justification Statement
4. Gate Information

LOCATION MAP

MEMORANDUM

DATE: May 4, 2016

TO: Chair and Members of the Historic Resources Preservation Board

FROM: Aimee N. Sunny, Preservation Planning Coordinator
Department of Community Sustainability

SUBJECT: **HRPB Project Number 16-00100075:** Consideration of a Retroactive Certificate of Appropriateness (COA) for gate installation for the single-family structure located at **331 Cornell Drive**; PCN# 38-43-44-15-06-005-1770. The subject property was constructed c.1925 and is a contributing resource within the College Park Local Historic District.

HRPB Meeting Date: May 11, 2016

Per Section 23.5-4k(1) of the historic preservation ordinance, the Board shall use the following criteria in making a determination:

A. What is the effect of the proposed work on the landmark or the property upon which such work is to be done?
Response: It is the analysis of Staff that the proposed gate installation would have an adverse effect on the historic appearance of the building and site, and is not compatible with the design or style of the Mediterranean Revival structure.

B. What is the relationship between such work and other structures on the landmark site or other property in the historic district?
Response: The proposed work will have no direct physical effect on any surrounding properties within the surrounding College Park Local Historic District, however it will have an indirect visual effect on the district.

C. To what extent will the historic, architectural, or archaeological significance, architectural style, design, arrangement, texture, materials and color of the landmark or the property be affected?
Response: The Applicant is proposing work that is not compatible with the architectural design and detailing of the structure and site by proposing a polyethylene gate that is not compatible with or authentic to the Mediterranean Revival structure. The gate installation will negatively affect the historic integrity of the site and setting of the historic structure.

D. Would denial of a certificate of appropriateness deprive the property owner of reasonable beneficial use of his property?
Response: No, the denial of this COA as submitted does not prevent the Applicant from potentially proposing other alterations to the structure, nor would it make the building uninhabitable.

E. Are the applicant's plans technically feasible and capable of being carried out within a reasonable time?
Response: Yes.

F. Do the plans satisfy the applicable portions of the general criteria contained in the United States Secretary of the Interior's Standards for Rehabilitation then in effect or as they may be revised from time to time? The current version of the Secretary's Guidelines provides as follows:

(1) A property shall be used for its historic purpose or be placed in a new use that requires minimal change to the defining characteristics of the building and its site and environment.
Response: No change to the use of the property is proposed.

(2) This historic character of the property shall be retained and preserved. The removal of historic materials or alteration of features and spaces that characterize a property shall be avoided.
Response: No historic materials are requested to be removed.

(3) Each property shall be recognized as a physical record of its time, place and use. Changes that create a false sense of historical development, such as adding conjectural features or architectural elements from other buildings, shall not be undertaken.
Response: Not applicable to this project.

(4) Most properties change over time; those changes that have acquired historic significance in their own right shall be retained and preserved.
Response: Not applicable to this project.

(5) Distinctive features, finishes and construction techniques or examples of craftsmanship that characterize a historic property shall be preserved.
Response: No historic materials are requested to be removed.

(6) Deteriorated architectural features shall be repaired rather than replaced, wherever possible. In the event replacement is necessary, the new material should match the material being replaced in composition, design, color, texture, and other visual qualities.
Response: No historic materials are requested to be removed.

Repair or replacement of missing architectural features should be based on accurate duplications of features, substantiated by historical, physical, or pictorial evidence rather than on conjectural designs or because the different architectural elements from other buildings or structures happen to be available for relocation.
Response: Not applicable to this project.

(7) Chemical or physical treatments, such as sandblasting, that cause damage to historic materials, shall not be used. The surface cleaning of structures, if appropriate, shall be undertaken using the gentlest means possible.
Response: Not applicable to this project.

(8) Significant archeological resources affected by a project shall be protected and preserved. If such resources must be disturbed, mitigation measures shall be undertaken.
Response: Not applicable to this project.

(9) New additions, exterior alterations or related new construction shall not destroy historic materials that characterize the property. The new construction shall be differentiated from the old and shall be compatible with the massing, size, scale and architectural features to protect the historic integrity of the property and its environment.
Response: The proposed gate material and design would alter the integrity of the setting and site design that characterize the property.

(10) New additions and adjacent or related new construction shall be undertaken in such manner that, if removed in the future, the essential form and integrity of the historic building and its environment would be unimpaired.
Response: Not applicable to this project.

G. What are the effects of the requested change on those elements or features of the structure which served as the basis for its designation and will the requested changes cause the least possible adverse effect on those elements or features?
Response: It is the opinion of Staff that the historic character of the property would be adversely affected by the proposed project as submitted by the Applicant, as outlined above. The requested gate installation does not represent the least possible adverse effect on the property. A wood or wrought iron gate could be installed that would complement the Mediterranean Revival structure and would be in compliance with the Land Development Regulations.

Section 23.5-4k(2). Additional guidelines for alterations.

In approving or denying applications for certificates of appropriateness for alterations, the HRPB shall also consider the following additional guidelines:

A. Is every reasonable effort being made to provide a compatible use for a property that requires minimal alteration of the building, structure or site and its environment, or to use the property for its originally intended purpose?
Response: No change to the use of the property is proposed.

B. Are the distinguishing original qualities or character of a building, structure or site and its environment being destroyed? The removal or alteration of any historic material or distinctive architectural features shall be avoided whenever possible.
Response: Not applicable to this project.

C. When a certificate of appropriateness is requested to replace windows or doors, the HRPB shall permit the property owner's original design when the HRPB's alternative design would result in an increase in cost of thirty (30) percent above the owner's original cost. The owner shall be required to demonstrate to the HRPB that:
(1) The work to be performed will conform to the original window openings of the structure; and
Response: Not applicable to this project.
(2) That the replacement windows or doors with less expensive materials will achieve a savings in excess of thirty (30) percent over historically compatible materials otherwise required by this code.
Response: Not applicable to this project.

331

07/22/2015 11:05

09/02/2015 09:39

331
331
12/23/2015 10:31

08/03/2015 12:27

331
ADT
Courtesy Notice of Violation
City of Lake Worth
08/03/2015 12:27

JUSTIFICATION STATEMENT
Request for approval of decorative front gate
331 Cornell Drive, Lake Worth Florida 33460
April 15, 2016
Permit application 2016-917

Request

The undersigned (home owner of the above described single family home) hereby requests the approval and issuance of a permit for a decorative front gate installed at the front of the driveway of the house.

When I purchased this historically designated home in early 2002, it had been neglected and run down for some time. The original front door had been replaced by a metal and glass door; the driveway was concrete and broken; the medallion above the front door was lacking whatever had once decorated it. It was clear to me that the prior residents in the house did not appreciate the possibilities of this home. I purchased the home with the intention of making it into a gem of this neighborhood.

I have spent the last 14 years beautifying my ugly duckling. I have always loved the Mediterranean Revival style, and have done my very best to do everything to enhance and respect the architecture and period of this house, from the exterior color of the house, replacing the glass front door with a custom made pecky cypress one, as well as the interior decor.

Because my home is located only one house away from Dixie Highway, and perhaps due to the fact there is a liquor store located right on the corner of Cornell and Dixie, we unfortunately get a tremendous amount of pedestrian and vehicular traffic on our street. Cars go way above the legally posted speed limit (there are no speed bumps or any other assistance to slow down traffic), and the amount of "transients" (for the want of a better term" walking on our sidewalk is alarming. While it is a free country and I welcome people enjoying our beautiful Florida weather, I do not believe I am exaggerating when I say that most of the people walking on Cornell Drive are not simply enjoying the great outdoors. Since as in most historical homes I do not have the luxury of a garage or any storage area, I have had many things stolen from my driveway and backyard (a commercial grade pressure cleaner, a generator, and a very expensive bicycle, to name just a few items).

More importantly, I am frightened by the ease with which intruders can come on to our properties. There is very little lighting on Cornell Drive, the street is very dark at night, and there is only so much lighting I can install outside my home.

I have found people on our street after dark without any apparent reason. My neighbors and I have actually discovered strangers fornicating on our front lawns. While I have installed an alarm system inside my home, I do not feel the perimeters of my yard to be secure. I planted hedges in the front, but people can easily come on to my property from

the driveway as well as on the west side of the driveway, where my neighbors planted fichus trees which are not kept trimmed and therefore have huge gaps for entry. Even though the gate could be opened from the outside, I felt that it would add another barrier, an appearance of security.

For these reasons, as well as for curb appeal/looks, I decided to have a gate installed at the beginning of my driveway, which I had replaced in 2015 with Chicago bricks.

I did not want to have the gate made out of wood, which would not only be unsightly but would rot fairly quickly in our rainy weather. While many of the homes in our neighborhood have PVC fences and gates (a list of such homes is attached), I rejected that as well since I did not feel PVC belonged in a "Spanish" style home such as mine. When I researched wrought iron fences, I did not like their open designs and the fact that they can rust and need maintenance. In addition, because my home has white paint accents (on the front door columns, window trims and the decorative medallion above the front door) I felt that wrought iron (which is black) was not in keeping with the house. I wanted something which would look more in keeping with the feminine and light appearance of the home.

One street away from Cornell, I found a business which offered a product which is made from King Starboard, which is a material used by marine and other industries. It is impervious to light, water and weather conditions, and is super strong. I have submitted the specifications with my permit application for this material, as well as a sample which I am hand delivering today (I request that it be returned whenever this process is done, as I borrowed the sample from Chic Setter).

I chose a European style design which looks like filigree, which I believe looks perfect with the front façade of my house. While this material is in fact relatively new, it does not look it, and it will withstand rain and hurricane. That is why King Starboard is used and recommended on waterfront homes as well as on boats and yachts. It is NOT made of PVC, which looks cheap and is nowhere as strong as King Starboard.

I do apologize that I did not realize I should have requested a permit before having the gate installed. But I fervently hope that you will agree that the installed gate is in keeping with the style of this home and beautifies the neighborhood.

Thank you very much for considering my request, and if there is anything else you need, please let me know.

Leigh R. Shinohara
331 Cornell Drive
Lake Worth, Florida 334360
561-596-1788

Homes with PVC fences and/or gates (these are just a few examples) in my neighborhood:

314 Cornell Drive
PVC Fence on side yard

335 Cornell Drive (next door to me)
PVC fence and gates

302 Pennsylvania
PVC solid fence

304 (I am guessing the number since house has no sign) Pennsylvania
PVC picket fence

301 Dartmouth
PVC picket fence

338 Dartmouth
Metal panels were used to piece space in between wood fence

320 Fordham
PVC picket fence (encloses entire front yard)

321 Fordham
PVC picket fence

312 Fordham
PVC fence encloses side and back yard, gate is also PVC

301 Pennsylvania
PVC fence on side yard

321 Princeton
PVC arbor in front yard

303 Vanderbilt Drive
PVC sold fence in front, huge PVC picket fence on side yard

246 Vanderbilt
PVC picket fence on side porch

223 Vanderbilt
PVC solid fence onboth sides of house, PVC gate and fence in back yard

236 Wellesley

PVC picket fence

325 Wellesley
PVC picket fence

1828 "K" Street
PVC picket fence on side yard, PVC gate in back

1710 "J" Terrace
PVC picket fence and gate (hideous), as well as metal fence

1629 "J" Terrace
PVC picket and solid fence encloses entire property

1609 "J" Terrace
White metal fence (NOT wrought iron)

1530 "J" Terrace
PVC picket fence

1531 "J" Terrace
Huge sold gray fence, does not appear to be even PVC, feels like particle board. Not wood.

R.B. BRENNAN SURVEYING

BOUNDARY SURVEY

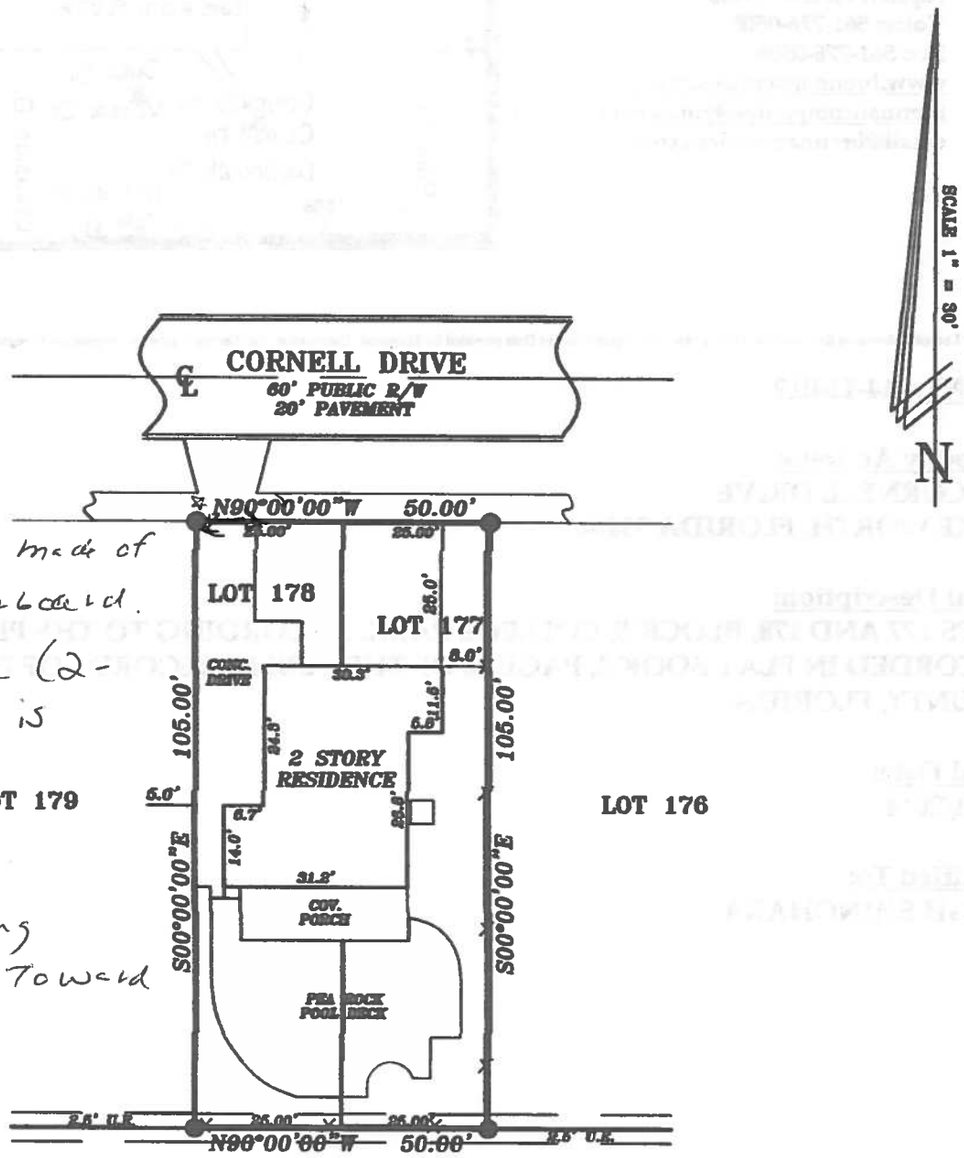

Gate is made of King Standard. Each gate (2-piece) is 50" high 58" wide they swing inward, toward house. Total Linear Feet = 116" Wide

SURVEYOR'S NOTES:

1. THIS SURVEY IS PREPARED FOR: LEIGH SHINOHARA
2. THE LANDS SHOWN HEREON WERE NOT ABSTRACTED FOR EASEMENTS AND/OR RIGHTS-OF-WAY OF RECORD.
3. VISIBLE ENCROACHMENTS ARE AS SHOWN.
4. NOTICE: THERE MAY BE ADDITIONAL RESTRICTIONS THAT ARE NOT RECORDED ON THIS SURVEY THAT MAY BE FOUND IN THE PUBLIC RECORDS OF THIS COUNTY.
5. THIS SKETCH IS THE PROPERTY OF TERRY L. MACDEVITT AND R.B. BRENNAN, INC. AND SHALL NOT BE REPRODUCED IN WHOLE OR PART WITHOUT THE PERMISSION OF ABOVE PARTIES IN WRITING.
6. BEARINGS SHOWN HEREON ARE BASED ON THE EAST LINE OF LOT 177. WHICH BEARS N.90°00'00"W. ALL BEARINGS ARE RELATIVE THERETO.
7. BOUNDARY DIMENSIONS SHOWN ARE PER PLAT AND FIELD MEASUREMENT UNLESS OTHERWISE NOTED.
8. CITY WATER & SEWER IS AVAILABLE
9. UNLESS OTHERWISE SPECIFIED THIS SURVEY IS NOT TO BE USED FOR CONSTRUCTION PURPOSES.
10. FENCE OWNERSHIP NOT DETERMINED
11. DESCRIPTION PROVIDED BY CLIENT OR CLIENTS REPRESENTATIVE.
12. UNDERGROUND UTILITIES NOT LOCATED.
13. UNDERGROUND FOUNDATIONS NOT LOCATED.
14. THIS SURVEY IS PREPARED FOR THE EXCLUSIVE USE AND BENEFIT OF THE PARTIES LISTED HEREON. LIABILITY TO ANY THIRD PARTIES MAY NOT BE TRANSFERRED OR ASSIGNED.

TERRY L. MACDEVITT

T L M PLS

REVISIONS		
DESCRIPTION	DATE	BY

DRAWN BY: MJM	DATE DRAWN: 12/02/14
FIELD BOOK:	PAGE:
CHECKED BY: TLM	DATE IN FIELD: 11/29/14
JOB No. 14-11-019	SHEET 2 OF 2

NOT VALID WITHOUT THE SIGNATURE AND THE ORIGINAL RAISED SEAL OF A FLORIDA LICENSED SURVEYOR AND MAPPER.

TERRY L. MACDEVITT
PROFESSIONAL SURVEYOR & MAPPER
FLORIDA LICENSE No. 4557

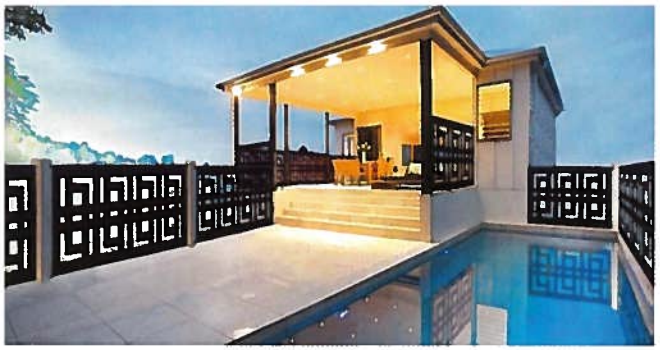

©CHIC SETTER™

2222 N Dixie Highway, Lake Worth, FL 33460
☎ +1 561 777 2139 ✉ info@chicsetter.com

www.chicsetter.com

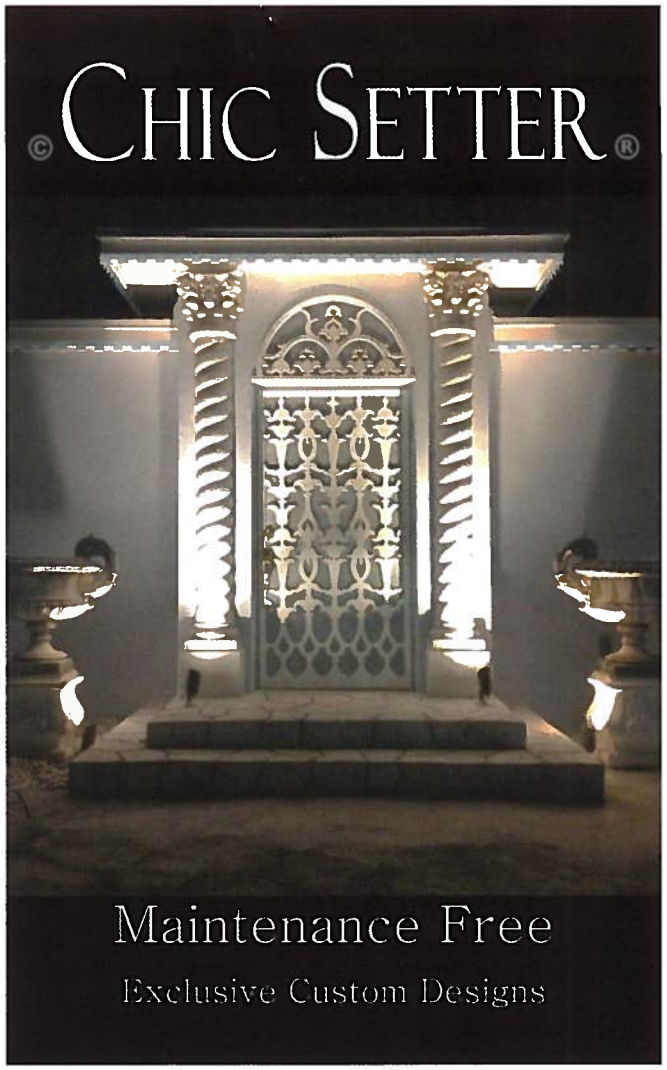

- Water & Sunlight Resistant.
- UV-Stabilized.
- Stain Resistant.
- Never Need Painting.
- High Impact & Tensile Strength.
- Abrasion & Stress-Crack Resistant.
- Will Not Splinter, Rot or Swell.
- Easy to Clean
- Never Need Refinishing

Copyright 2014, CHIC SETTER. All Rights Reserved. Protected by Trademark and Registered Copyrights.

King Plastic Corporation

King StarBoard®, The Original Marine-Grade Polymer Sheet.

Applications

- Bow Pulpits
- Countertops
- Frames and Trim
- Furniture
- Grab Rails and Handles
- Hatches and Doors
- Rod and Cup Holders
- Steps and Dock Boxes
- Tray Tables

Description

King StarBoard® is the original marine-grade high-density polyethylene sheet and the industry standard. It is the product of a proprietary process called K-Stran™, the most advanced manufacturing process for superior flatness and consistency. King StarBoard is environmentally stabilized to withstand the harshest marine conditions. It will not warp, rot, or delaminate when exposed to humidity or water. King StarBoard is easy to fabricate with standard woodworking tools and requires little or no finishing.

King StarBoard is upgradable to King MicroShield® with an exclusive antimicrobial additive from Biosafe®, the latest technology for protecting the product surface against stain and odor causing bacteria, algae and fungi.*

King StarBoard is upgradable with King FlameShield, for ASTM E-84 Class A or B Flame/Smoke Compliance and CAN/ULC-S102 for Canadian Compliance.

For more information about King MicroShield® and King FlameShield, please visit those product pages.

Disclaimer: King MicroShield® may affect color. King FlameShield may affect finish and color.

Active ingredient (Biosafe®).....antimicrobial siloxane EPA Reg. No. 83019-1

*For bacteriostatic, fungistatic, & algistatic properties. This product is exempt from registration under 40 CFR 152.25(a). King MicroShield® effectiveness verified by ISO and ASTM standards. This product does not protect users or others from disease-causing bacteria. Always clean this product thoroughly after use.

Biosafe® is a registered trademark of BIOSAFE, Inc.: Patent number 7,851,653 and 7,858,141.

Find a Distributor

Specifications

Standard Sheet Sizes

in:	48" x 96"	54" x 96"
mm:	1219mm x 2438mm	1371.6mm x 2438mm
Colors	Only in 1-1/2" gauge, all standard colors available	All standard colors available

Standard Gauges

in:	1/4"	3/8"	1/2"	3/4"	1"	1-1/2"
mm:	6.4mm	9.53mm	12.7mm	19mm	25.4mm	38mm

Approximate Weight 48 x 96 (only in 1-1/2" gauge)

lbs:	240 lbs
kg:	108.6kg

Approximate Weight 54 x 96

lbs:	45 lbs	67.5 lbs	90 lbs	135 lbs	180 lbs
kg:	20kg	31kg	41kg	61kg	81kg

Tolerance information:
Gauges 1/4" up to 1-1/2" ± 5% | Length and width plus only at room temperature

Custom sheet sizes, gauges and colors available

Physical Properties

Properties	Units	ASTM	Nominal Values
Density	g/cc	D1505	0.955
Tensile Strength @ Yield	psi	D638	>4,100
Tensile Modulus	psi	D638	255,000
Elongation @ Break	%	D638	>600
Elongation @ Yield	%	D638	9.8
Flexural Modulus	psi	D790	185,000
Flexural Stress @ 5% Strain	psi	D790	3,810
Compressive Properties 10% Strain	psi	D695	4,950
Durometer	Shore D	D2240	68
Tensile Impact	ft.lbs./in.2	D1822	115
Izod Impact Resistance	ft.lbs./in.2	D256	1.1
Brittleness Temp.	°C (°F)	D746	<-76°C (<-105°F)
Vicat Softening	°C (°F)	D1525	123°C (253°F)
Heat Deflection Temp. 66 psi	°C (°F)	D648	75°C (167°F)
Screw and Nail Withdrawl	lbs	D1761	657 & 63
Flammability	Rating	UL94	HB

All values are determined on specimens prepared according to ASTM Standards.
Nominal values should not be interpreted as specifications.
King StarBoard® is made entirely from FDA and USDA approved material.
King StarBoard® meets ASTM D4976.
The raw material used to make King StarBoard® does not contain BPA's or Phthlates.

Colors

Black

Charcoal Gray

Dolphin Gray

Light Gray

Sanshade

Seafoam

Arctic White

White/White

*Note: Color accuracy can vary considerably on computer monitors and printers. Please consult your distributor for a product sample before making critical color choices. Specialty colors by special order only.

Additional Information

- Made of the finest polymers available, using our proprietary K-Stran™ process for superior flatness and consistency.
- Environmentally stabilized for harsh sun and tough marine environments.
- Will not rot, swell, splinter or delaminate when exposed to humidity or water.
- Precise tolerances ensure consistent color, thickness and density, even for special thickness gauges and custom order colors.
- Easy to fabricate with standard woodworking tools and requires little or no finishing.
- Available in eight standard colors to match or accent any gelcoat.
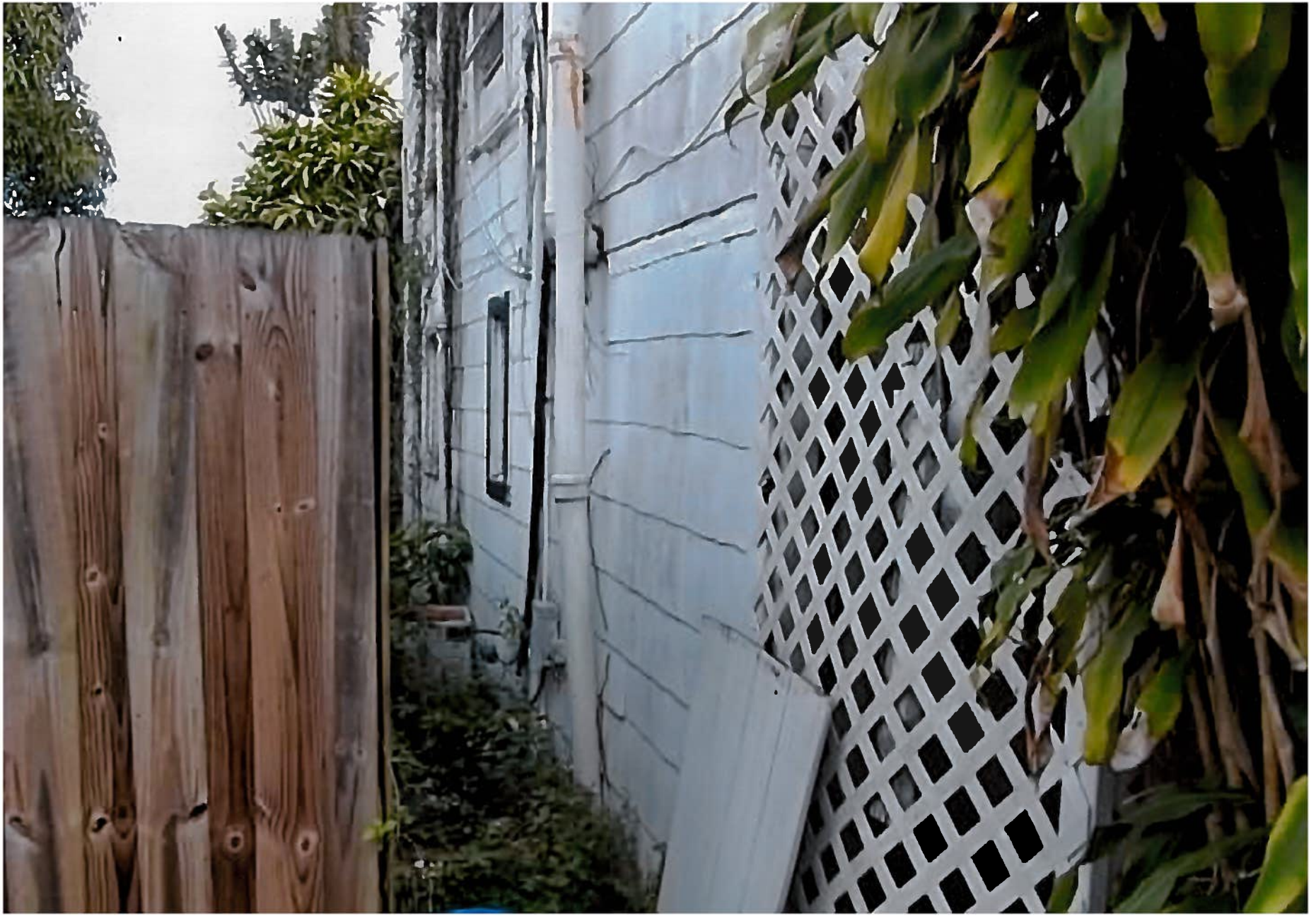
- Unlimited custom/proprietary colors.
- Durable matte-textured surface on both sides.
- Easy to clean and never needs refinishing.
- Edges finish cleanly and easily.
- Forms easily for smooth curves.
- Has passed the Federal Motor Vehicle Standard 302 fire test required for use in motor vehicles, including motor homes.
- Available in large sheets up to 54" x 96" or 48" x 96".
- Custom sheet sizes available.
- Shipped with a protective masking on one side.
- Proven on thousands of boats and yachts.
- Experienced boat builders and boaters know the King StarBoard® brand and trust it more than any other.