City of Lake Worth

FINANCE OFFICE

INVITATION FOR BID

IFB 15-116

15 MVA POWER TRANSFORMERS

Bid Submission Deadline

Day/ Date: **September 22, 2015**
Time: 3:00PM
Location: Finance Office
7 North Dixie Highway – 2nd Floor
Lake Worth, FL 33460

FINANCE OFFICE
7 North Dixie Highway
Lake Worth, FL 33360
TEL: 561-586-1674

INVITATION FOR BID
IFB #15-116

15 MVA POWER TRANSFORMERS

The City of Lake Worth Utilities Department is accepting sealed bids to purchase **15 MVA Power Transformers**.

Bid documents may be downloaded at the City's website at: www.LakeWorth.org. Hard copies of bid documents may also be acquired from the Finance Office at 7 North Dixie Highway, Lake Worth, FL 33460.

Time is of the essence. Any bid received after **3:00PM on Tuesday, September 22, 2015**, whether by mail or otherwise, will be returned unopened. The time of receipt shall be determined by the time clock located in the Finance Office. Bids shall be placed in a sealed envelope, marked in the lower left-hand corner with the bid number, title, date, and hour bids are scheduled to be received. Offerors are responsible for insuring that their bid is stamped by office personnel by the deadline indicated.

All bids must be delivered or mailed to:

City of Lake Worth, Finance Office – 2nd Floor
7 North Dixie Hwy.
Lake Worth, FL 33460

ENVELOPES CONTAINING BIDS MUST BE IDENTIFIED AS BID # 15-116.

Hirut Darge, Purchasing Agent

PUBLISH: PALM BEACH POST
August 23, 2015

SECTION 1- SPECIFICATION

The City of Lake Worth Utilities Department is accepting sealed bids to purchase **15 MVA Power Transformers**.

1. SCOPE

1.1. The purpose of this specification is to provide quantity 8 (eight) oil immersed, three phase, outdoor type, step-down two-winding transformers with self-contained voltage regulating equipment on the low voltage side, automatic thermostatically controlled forced-air cooling equipment and other accessories, spare parts and appurtenances hereinafter specified.

2. BIDDER PREQUALIFICATIONS

2.1. The bidder must show proof of having manufactured at least ten (10 ea.) similar units in design and same MVA rating or bigger, in the last five years that were successfully installed. If the company has not been previously prequalified or has not built a unit for City of Lake Worth (CLW), then the shop where the transformers will be manufactured will have to be inspected by CLW staff.

2.2. A qualified bidder shall manufacture the transformer(s) in North, South, or Central America.

3. GENERAL

3.1. The transformers shall be of the highest commercial quality as to material, workmanship, and design. The transformers manufacturers must be pre-approved by CLW.

3.2. The transformer shall be designed, manufactured, and tested in accordance with the current standards of ANSI/IEEE and NEMA, except where specific requirements of these specifications conflict with these standards.

3.2.1. Industry Publications

- ANSI C57.12.00, Standard General Requirements for Liquid-Immersed Distribution, Power, and Regulating Transformers (IEEE)
- ANSI C57.12.10, Standard for 230kV and Below, 750/862kVA through 60/80/100MVA Three-Phase without Load Tap Changing and 3.75/4.687 through 60/80/100MVA with Load Tap Changing
- ANSI C57.12.90, Standard Test Code for Liquid-Immersed Distribution, Power, and Regulating Transformers and Guide for Short-Circuit Testing of Distribution and Power Transformers (IEEE)
- ANSI C57.13, Standard Requirements for Instrument Transformers
- ANSI C62.11, Standard for Metal-Oxide Surge Arresters for AC Power Circuits (> 1kV)
- ANSI C57.19.00, Standard General Requirements and Test Procedure for Power Apparatus Bushings
- ANSI C57.19.01, Standard Performance Characteristics and Dimensions for Outdoor Apparatus Bushings
- ANSI C57.19.100, Guide for Application of Power Apparatus Bushings
- ANSI C57.91, Guide for Loading Mineral-Oil Immersed Transformers (IEEE)
- NEMA TR1, Transformers, Regulators, and Reactors

- ASTM D4059 - 00(2010), Standard Test Method for Analysis of Polychlorinated Biphenyls in Insulating Liquids by Gas Chromatography
- ASTM D3487 – 09, Standard Specification for Mineral Insulating Oil Used in Electrical Apparatus.
- INTERNATIONAL STANDARD IEC 60214-2

3.3. All materials and equipment shall be new and of high quality. The basic specifications are:

3.3.1. 9/12/15 MVA, ONAN/ONAF/ONAF (OA/FA/FA) @ 65° C Rise.

3.3.2. Frequency: 60 Hz.

3.3.3. Voltages: 26.4 kV Delta/13.2 kV Grounded Wye.

3.3.4. LV Side LTC - 33 Tap Positions, ±10% - 5/8% (0.625%) Per Tap.

3.3.5. HV Side NLTC – 5 Tap Positions ±5% - 2.5% Per Tap.

3.3.6. Impedance shall be 7.5% at rated voltage and the 9 MVA base rating.

4. ELECTRICAL DESIGN

4.1. The transformer, including all core and coil assemblies shall be power class. The transformer windings shall meet the IEEE Short Circuit requirements for circular winding transformers and test data on similar size transformers shall be supplied with the bid to verify compliance.

4.2. All windings shall be of copper.

4.3. The core shall be at minimum of high-grade, grain-oriented, silicon steel.

4.4. The transformer design shall be adequate to withstand short circuits, with the fault current limited only by the impedance of the transformer itself.

4.5. The regulating winding shall be fully distributed and be electrically independent from and or placed on a separate winding cylinder from the high and low voltage windings.

4.6. The insulation on all conductors shall be thermally upgraded cellulose insulating paper.

4.7. The paper insulation shall be applied in single or multiple strips such that a minimum of 30% of the paper surfaces are overlapped to provide for a continuous insulating surface. Sufficient tension shall be maintained on the paper strands to prevent loose wraps.

4.8. If clamping rings are utilized in the transformer design, full circumference rings shall be used.

4.9. The core and coil assembly shall be dried using a “vapor-phase” system prior to vacuum filling.

4.10. It is desirable to build the transformer to allow the capability of paralleling in the future.

5. SHORT CIRCUIT CAPABILITY

5.1. The transformer shall be designed and manufactured to withstand the mechanical and thermal stresses caused by external short circuits, as defined by ANSI / IEEE C57.12.00-1993, Section 7, when connected to an infinite bus on either the high or the low side, and thereby be completely self-protecting for all external faults.

5.2. Evidence of design capability to meet these requirements shall be provided at time of bid evaluation.

6. RATINGS

6.1. The transformer shall be designed to operate at a frequency of 60 Hz.

6.2. The transformer shall be capable of continuously transforming the minimum MVA rating, as stated in Paragraph 3.3.1, self-cooled at rated voltage and frequency without exceeding an average winding temperature rise of 65° C.

6.3. The transformer shall be equipped with two stages of automatic, thermostatically controlled auxiliary cooling equipment that shall increase its self-cooled MVA rating by 33-1/3% with the first stage of auxiliary cooling equipment and 66-2/3% with both stages of auxiliary cooling equipment in service. The increased capability by forced cooling shall be obtained by forced air only. The auxiliary ratings shall be achieved without exceeding an average winding temperature rise of 65° C. Refer to Table 1 below.

Table 1 - Transformer Cooling Class Designations

Transformer Cooling Class Designations		
Class	**Designation**	**MVA**
Self-cooled	ONAN	9
1st stage auxiliary cooling	ONAN/ONAF	12 (increase by 33-1/3%)
Both stages of auxiliary cooling	ONAN/ONAF/ONAF	15 (increase by 66-2/3%)

6.4. The impedance of the transformer shall be as stated in Paragraph 3.3.6 and shall be based on the self-cooled rating and neutral tap voltage position. The total impedance used for the short-circuit-withstand design of the transformer shall be the transformer impedances only, without considering any benefit of system impedances.

6.5. The primary winding voltage shall be as stated in Paragraph 3.3.3

6.5.1. The primary windings shall be Delta connected.

6.5.2. Full rated transformer capacity shall be allowed in each of the winding's no-load tap positions.

6.6. The secondary winding voltage shall be as stated in Paragraph 3.3.3 and shall be equipped with automatic on-load tap changer voltage regulating equipment.

6.6.1. The secondary winding shall have full capacity above neutral voltage and reduced capacity below neutral voltage.

6.6.2. The secondary windings shall be Wye connected with the neutral solidly grounded externally.

6.7. The phase-to-neutral voltage of the low voltage winding shall lag by 30 degrees the phase-to-neutral voltage of the high voltage winding.

7. DESIGN REVIEW

7.1. The manufacturer shall provide CLW with all the design data.

7.2. CLW Engineering staff will be reviewing the design data provided by the manufacturer.

7.3. At CLW's discretion, CLW may ask the manufacturer to have web conference meetings to discuss the design of the transformer and any other aspect related to these specifications. On these conference meetings, CLW may ask the manufacturer to have the design engineer(s) available to discuss the design with CLW's engineers.

7.4. Under no circumstance, the manufacturer shall have any authority to change the design agreed upon without consulting with CLW's project engineer(s).

7.5. The manufacturer shall not start manufacturing the transformer until all the design data has been reviewed by CLW and they receive authorization to proceed from CLW's project engineer(s).

7.6. The manufacturer shall submit a production schedule associated with the equipment being provided. Such schedule shall be updated and submitted by the first of each month until completion and delivery of the unit(s).

8. INSULATION LEVELS

8.1. The winding insulation levels shall be as follows in Table 2:

Table 2 - Transformer Winding Insulation Levels

WINDING INSULATION LEVELS	
Rated Voltage	**Basic Impulse Level (BIL)**
138kV	550kV
27kV	200kV
<= 17kV	110kV
Neutral	110kV

9. BUSHINGS

All bushings shall meet the requirements of ANSI Standard C57.19.00 and C57.19.01 and to NEMA standard arrangement, spacing, and nomenclature. The color shall be ANSI-70 Gray and shall safely withstand specified transformer test levels.

9.1. The High Voltage bushings shall be Paper-Oil-Capacitor type.
9.2. The Low Voltage bushings shall be of Paper-Resin-Condenser (PRC) type or Paper-Oil-Capacitor type.
9.3. The necessary bushings shall meet the following minimum requirements in Table 3:

Table 3 - Bushing Insulation Levels

BUSHING INSULATION LEVELS	
Rated Voltage	**Basic Impulse Level (BIL)**
HV – 34.5kV	200kV
LV – 25kV	150kV
LV Neutral – 25kV	150kV

9.4. All bushings shall be provided with stud to NEMA four (4) hole pad terminal connectors. The connectors shall be Anderson, stud to flat bar, Type HDSF, or approved equal and shall be tin-plated.
9.5. The neutral bushing shall be provided with enough 500 MCM insulated copper cable and cable to 4-hole connectors to facilitate grounding the bushing at the base of the transformer. Fasteners shall be provided on the tank side to secure this cable to the tank.
9.6. The Low Voltage Neutral Bushing shall be identical to the Low Voltage line bushings.
9.7. The transformer core shall be securely grounded externally on the tank. The core ground lead shall be brought out through the tank top, or side near the top, with an insulated porcelain bushing. This bushing shall be grounded to a ground pad with 300 MCM insulated copper cable. The core ground cable shall be connected for shipment to allow an insulation resistance test upon arrival.

9.8. Bushings of like-voltage shall be interchangeable. All bushings shall be removable without removing the tank cover. All liquid-filled bushings shall be supplied with liquid level indication and provision for power factor test.

9.8.1. HV Bushings shall be capable of accepting three bushing-type current transformers each.

9.8.2. LV Bushings shall be capable of accepting two bushing-type current transformers each.

9.9. Bushing current ratings shall be based on the continuous line current at the maximum specified MVA rating of the transformer. Bushings shall have sufficient excess capacity to permit transformer loading with "moderate sacrifice of life expectancy" as tabulated in ANSI C57.91, without exceeding temperature rise requirements as defined by ANSI C57.19.100. The neutral bushing shall be suitable for the maximum rated current of the associated line terminals.

9.10. The B-Phase bushing of the HV shall be on the same center line as the B-Phase bushing of the LV.

10. SURGE ARRESTERS

10.1. Six (6) polymer station class surge arresters, three (3) for the protection of the primary windings and three (3) for protection of the secondary windings, shall be provided mounted on the transformer tank or on suitable mounting brackets attached thereto. The surge arresters shall be in compliance with ANSI C62.11-2012

10.2. Insulated 500 MCM copper cable and all necessary connectors shall be provided to ground the surge arresters to the ground pads at the base of the tank. Means shall be provided along the tank wall to attach the cables to the tank in a removable fashion. Only one cable shall run down the tank for each set of arresters for grounding.

10.3. The following are the surge arresters voltage characteristics in Table 4 :

Table 4 - Surge Arresters Voltage Characteristics

Surge Arresters Voltage Characteristics		
KV CLASS	**Maximum Continuous Operating Voltage - MCOV (KV RMS)**	**DUTY CYCLE Voltage (KV RMS)**
138	84	108
26.4	17	21
13.2	8.4	10

10.4. The manufacturer shall advise CLW's project engineer(s) if suitable insulation coordination and protection cannot be achieved with the arresters given in the table above. In addition, the manufacturer shall supply graphical data, which shows the transformer's design BIL ratings for each winding the arresters are protecting along with the arrester's protection margin characteristics under lightning surge and switching surge conditions.

11. GAUGES AND ACCESSORIES

The transformer shall be equipped with the following accessories

11.1. A magnetic oil level gauge, manufactured by Qualitrol or comparable, mounted on tank and readable from ground level. It shall have a 6-inch dial and low and high levels alarm contacts.

11.1.1. Nonadjustable alarm contacts shall be provided and shall be set to close at the minimum safe operating level of the liquid for means to trip the transformer off line

11.1.2. A Secondary nonadjustable alarm contacts shall be provided and shall be set to close 1 to 2 inches above safe operating level of the liquid for means to send a “Low Oil Level Alarm”

11.2. A top oil temperature indicator, manufactured by Qualitrol or comparable, with alarm contacts and maximum temperature pointer with manual reset shall be provided. It shall be located at an eye-level height for observation and resetting. A capillary tube shall connect this device to the sensing element located in a well near the top oil level. The contacts shall be connected/wired and calibrated as follows:

11.2.1. 1st Contact – To activate the alarm circuit at 75° C

11.2.2. 2nd Contact – To activate the trip circuit at 100° C

11.3. A winding temperature indicator, manufactured by Qualitrol or comparable, shall be located at a convenient eye-level height for observation and resetting. A capillary tube shall connect this device to the sensing element located in a well near the top oil level.

11.3.1. Current from a CT located on phase “A” of the LV winding shall be used to heat a heater coil around the sensing element well which, when added to the temperature of the top oil in the tank, shall provide indication of the simulated winding temperature. The indicator shall include the following:

11.3.1.1. A manually resettable red peak temperature pointer.

11.3.1.2. Four (4) internal switches of which the operating temperatures shall be readily visible by use of adjustable switch setting knobs and pointers located along the dial of the indicator. The switches shall be connected/wired and calibrated as follows:

11.3.1.2.1. 1st Switch - To activate the 1st cooling stage at 70° C

11.3.1.2.2. 2nd Switch – To activate the 2nd cooling stage at 80° C

11.3.1.2.3. 3rd Switch – To activate the alarm circuit at 95° C

11.3.1.2.4. 4th Switch – To activate the trip circuit at 120° C

11.3.1.2.5. The indicator shall be calibrated using calculated values during the heat-run tests.

11.4. The transformer shall be equipped with an Advanced Power Technologies TTC-1000 Electronic Temperature Monitor.

11.4.1. The monitoring system shall include:

11.4.1.1. (One) 1 liquid temperature probe

11.4.1.2. (One) 1 ambient temperature probe

11.4.1.2.1. Ambient temperature probe shall be installed under the control cabinet using installation kit provided.

11.4.1.3. (One) 1 LTC tank probe

11.4.1.4. (One) 1 auxiliary CT input for hottest-spot temperature indication and anticipatory cooling algorithm based on load and time.

11.4.1.5. (Two) 2 optically isolated inputs shall be provided for transformer alarms not generated by the TTC-1000.

11.4.2. The Advanced Power Technologies model number is TTC-1000-057290

11.4.2.1. Panel Mount – TTC-1000-0 (panel unit) 5 (DNP 3.0) 7 (3 probes and 1 CT) 2 (4 form C) 9 (V-PIN Fiber), 0 (No extra CTs. Note - This model number is supplied with a clip-on split core CTs as required.

11.4.3. RTD thermowell probes, quantity two, model TTC-PROBE-12-XXX RTD Ambient temperature probe, quantity one model TTC-PROBE-00-050 Where XXX is the probe cable length from 10 to 250 feet (To be selected by the manufacturer).

11.4.4. The monitor shall be mounted inside the control cabinet. The monitor shall have digital readout of top oil, ambient, winding hottest-spot temperatures and minimum and maximum

temperatures for top oil, LTC differential, and hottest spot winding temperatures time stamped with date and time.

11.4.5. The temperature sensors shall be a RTD's with connectorless wiring to the ETM. The temperature measurement circuit shall be accurate to +/- 1.5% without ever requiring calibration.

11.4.6. The monitor shall be capable of detecting both slowly evolving heating and rapidly occurring heating in the LTC tank with separate alarm points. Monitor shall also be capable of logging LTC differential temperature per tap position.

11.4.7. Monitor shall provide anticipatory cooling for a sudden increase in transformer load current after a predetermined and programmable period of time.

11.4.8. The monitor shall be powered by 125 VDC with an appropriately sized fuse.

11.4.9. The monitor shall not contain any batteries.

11.4.10. The monitor shall accommodate V-PIN fiber optic interface for dedicated SCADA communications.

11.4.11. All limit switches and other accessories with alarm contacts shall be externally wetted by the same DC voltage and connected to one of the digital inputs. All digital inputs shall have an operating wetting voltage range of 38 to 290 VDC or 24 to 260 VAC.

11.4.12. Current shall be monitoring with a split core low burden interposing current transformer with an AC current output.

11.4.13. The manufacturer shall provide a hard copy print of all monitor settings, supporting software, and supporting documentation.

11.4.14. The manufacturer shall provide a CD with the AutoCAD .dwg files associated with the design.

11.5. Two (2) mechanical pressure relief devices, Qualitrol Series 208-60, with alarm contacts and semaphore.

11.5.1. One (1) shall be mounted on the main tank and one (1) on top of the LTC compartment.

11.5.2. A separate seal-in relay and target shall be provided for each one.

11.5.3. The pressure relief devices shall be mounted without the use of standpipes.

11.6. Two (2) Qualitrol 900 Series Rapid Pressure Rise Relays and shut off valves shall be provided.

11.6.1. One (1) shall be mounted on the main tank and one (1) on the LTC compartment.

11.6.2. The one on the main tank shall be located near the corner of the tank and five feet above the base.

11.6.3. The relay shall be connected without the use of any reduction pipes.

11.6.4. Separate Qualitrol Series 909 Seal-in Relays shall also be provided. The Seal-in Relays shall be designed for 125 VDC operation and mounted in the transformer control cabinet.

11.7. The transformer accessories shall be located in accordance with latest revision of ANSI standard C57.12.10 and per Figure 1

Figure 1- Accessories location excerpt from IEEE Std. C57.12.10-2010

IEEE Std C57.12.10-2010
IEEE Standard Requirements for Liquid-Immersed Power Transformers

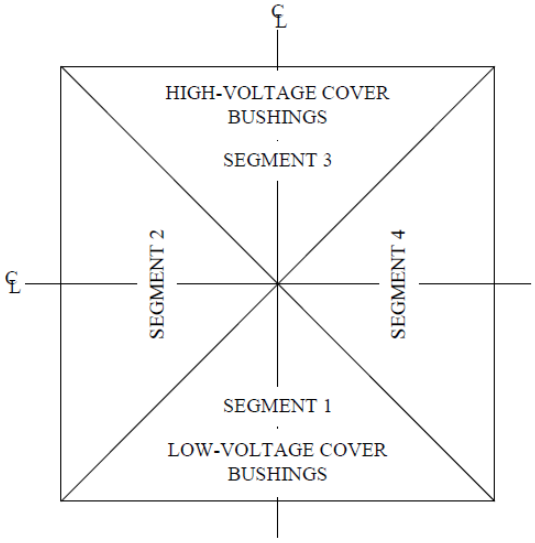

Accessories	Locations	Clause ref.
DETC operating handle	S1, S4, see Clause ref.	Table 4
Liquid level indicator	S1	5.1.2
Liquid temperature indicator	S1	5.1.3
Winding temperature indicator	S1	5.1.4
Pressure-vacuum gauge	S1 or S4	5.1.5
Pressure-vacuum bleeder valve	S1	5.1.6
Pressure relief device	Cover	5.1.7
Drain and filter valves	S1	5.1.8
Jacking facilities	See ref.	5.3.4
Nameplate	S1	5.4
Ground pad(s)	See ref.	5.5
†Auxiliary cooling control	S1 or S2	5.9
†LTC equipment	S1 or S2	6

†When furnished.

NOTE—Some designs include accessories and wiring connections as part of the LTC equipment assembly. In such cases, accessories may be located in the same segment as the LTC and may be viewed parallel to the segment centerline.

Figure 1 — Accessories

12. BUSHING CURRENT TRANSFORMERS

12.1. The bushing current transformers (BCTs) shall conform to ANSI/IEEE C57.13-1993 and C57.19.01-1991 for bushings' dimensions that will adequately accommodate the maximum "D" dimensions for the subject bushings, as shown in the applicable tables. In addition, they shall be five-terminal, relay accuracy, multi-ratio type and shall be provided as shown in Table 5 below:

Table 5 - Bushing Current Transformers

Bushing Current Transformers		
BUSHING TERMINALS	**AMPERE RATIO**	**ACCURACY CLASS**
H1-H2-H3	2000/5	C800
H1-H2-H3	1200/5	C800
H1-H2-H3	600/5	C800
X1-X2-X3	1200/5	C800
X1-X2-X3	1200/5	C800
X0	1200/5	C800

12.2. The high voltage winding CTs shall be arranged so that the highest ratio is placed closest to the winding end of the bushings.

12.3. All secondary leads shall be connected to conveniently mount shorting type terminal blocks in the control cabinet.

12.4. Polarity marks on bushing CTs shall be toward external bushing terminals.

12.5. The transformer shall also be provided with the following additional bushing CTs:

12.5.1. One (1) current transformer for the winding temperature indicator located in phase "A" (X1) of the low voltage winding, as described in Paragraph 11.3.1.

12.5.2. One (1) current transformer for the load drop compensation circuit (LDC) of the voltage regulating equipment located in phase B (X2) of the low voltage winding.

13. CONTROL CABINET

13.1. All terminals for remote control wiring and LTC control equipment shall be located in a suitable control cabinet located in Segment 1 (See Figure 1 – Accessories location excerpt from IEEE Std. C57.12.10-2010)

13.2. The cabinet shall be furnished with a removable 1/8” thick conduit plate in the bottom.

13.3. The cabinet shall be weather-tight.

13.4. It shall be equipped with a lamp socket with switch activated by the door and a duplex grounding type 120 VAC receptacle.

13.5. 120/240 VAC automatically controlled space heaters are to be provided to prevent condensation and keep the components in the cabinet dry.

13.5.1. The heaters shall be provided with guards.

13.5.2. Ventilating holes shall be provided to permit proper air circulation.

13.5.3. A magnetic circuit breaker shall be provided for the heaters’ circuit.

13.5.3.1. Fuses are not acceptable for the heaters’ circuit.

13.6. Where fuse blocks are required, they shall be modular type with bakelite frame and reinforced retaining clips.

13.7. The control cabinet doors shall have provisions for securing them in the open position. Doors shall be hinged and have heavy-duty handle-type latch. Hinged panels with controls mounted on them shall be provided with suitable stops.

13.8. The cabinet interior shall be finished in bright white or equal. The white coat shall be applied over the standard primer coat. The cabinet exterior shall match that of the main tank.

14. WIRING

14.1. The control and auxiliary power circuits for the transformer shall be completely wired. All circuits for external connections shall be brought to terminal blocks in the control cabinet.

14.2. Terminal blocks shall be furnished with white marking strips. Twenty (20) percent of terminals on each terminal block shall be allocated as spares for circuit modifications and for termination of all conductors in a multi-conductor control cable.

14.3. Splices will not be acceptable.

14.4. Protective overcurrent devices shall be provided in accordance with industry’s good practices.

14.5. All control wiring shall be fitted with solderless ring-type compression terminals. Control wiring terminal boards shall be barrier type and accommodate ring-type solderless compression connectors.

14.6. Each terminated wiring connection shall be marked with a destination label on each end.

14.7. Each set of current transformer secondary leads shall be brought to shorting-type terminal blocks in the control cabinet with ring-type compression connectors.

14.8. CLW will provide auxiliary power supply, single-phase, three-wire, 60 Hz source to terminals in the control cabinet to operate the forced air cooling equipment, tap changer motor drive, heaters and any other low voltage AC requirements.

14.9. The manufacturer shall furnish a terminal block for termination of at least three (3) #10 AWG, 600 VAC-type RHW (Rubber insulated High Water Resistant) cables. This terminal block shall be clearly labeled as the terminal connection of the input single-phase AC source. No load shall be connected to this terminal connection. The high leg of the connection is the 208 VAC phase-to-ground associated with a 120/240 volt, single phase, 60 Hertz station service transformer shall be clearly labeled as to its termination point.

14.10. Terminal blocks for external connections shall be clearly labeled to indicate the function of the connections. Drawings for the cabinet shall be labeled similarly.

15. TAP CHANGER FOR DE-ENERGIZED OPERATION

15.1. The primary winding shall be equipped with five (5) no-load tap positions. Refer to **Table 6** below.

15.1.1. One (1) at rated voltage

15.1.2. Two (2) 2.5% taps above and below rated voltage

15.1.3. Two (2) 5% taps above and below rated voltage

Table 6 - HV Side NLTC

HV Side NLTC		
No-Load Tap Position	**+/- % Rated Voltage**	**Voltage (kV)**
A	+ 5%	27.72
B	+ 2.5%	27.06
C	Rated HV	26.4
D	- 2.5%	25.74
E	- 5%	25.08

15.2. Tap changers for de-energized operation shall meet IEC 60214-1.

15.3. The manual drive shall be manufactured by the tap-changer manufacturer and made of corrosion-resistant cast aluminum.

15.3.1. It should be located at ground level and shall be lockable.

15.3.2. An interlock circuit to prevent operation while the transformer is energized shall be included.

15.3.3. The tap changer handle shall have provision for padlocking in any tap or rated voltage position, and shall provide visible indication of the tap position without unlocking.

15.3.4. A stainless steel nameplate shall be permanently attached next to the operating handle which says “WARNING – DO NOT OPERATE THIS TAP CHANGER WHEN TRANSFORMER IS ENERGIZED”.

16. LOAD TAP-CHANGERS AND CONTROLS

16.1. The load tap changing equipment shall be designed to provide regulation of the low voltage winding, maintaining full capacity MVA at all tap positions above rated voltage and rated current at all tap positions below rated voltage.

16.2. This equipment shall be capable of ± 10% voltage regulation in 32 - 5/8% (0.625%) steps at full capacity above neutral and reduced capacity below neutral voltage.

16.2.1. The current rating of the tap-changing equipment shall be based on the maximum force-cooled rating of the transformer (15 MVA).

16.3. The barrier separating the load tap changer from the transformer main tank shall be able to withstand full vacuum from either direction.

16.4. A mechanical position indicator visible from outside the equipment shall be provided.

16.4.1. The position indicator shall be calibrated L - N - R – i.e. Lower – Neutral – Raise - from the left end to the right end of the scale.

16.4.2. The nomenclature for the various positions shall be 1 through 16 above, neutral and 1 through 16 below neutral voltage.

16.4.2.1. Use of 1 through 33 with 17 as the neutral position is not acceptable

16.4.3. The position indicator shall be located so that it will be visible to an operator at the control switch for the drive motor and preferably located at eye-level.

16.4.4. The position indicator shall be mechanically driven directly from the drive mechanism without auxiliary devices.

16.5. A hand crank for manual operation of the drive mechanism shall be provided.

16.5.1. The hand crank shall be removable and stored in the cabinet housing of the mechanism.

16.5.2. An electrical interlock switch shall be provided to prevent electrical operation of the LTC mechanism while the hand crank is operated.

16.6. The transformer shall have provisions for remote operation and indication of the load tap changer equipment. The following equipment or provisions shall be provided for remote operation and indication of the load tap changing equipment.

16.7. All necessary equipment shall be installed and wiring provisions made by the manufacturer on the transformer to allow for remote monitor and control of the LTC such as:

16.7.1. LTC position indication

16.7.2. LTC operations counter

16.7.3. Raise and lower drag hands data

16.7.3.1. This shall be resettable remotely

16.8. The manufacturer shall provide valves, connecting pipes and fittings to equalize the pressure between the switch compartment and the transformer main tank during vacuum processing and filling.

17. VACUUM INTERRUPTER TYPE LTC

17.1. Load tap-changers for regulation of the low voltage winding shall be designed to work on a preventive autotransformer (reactor) switching principle using vacuum interrupters to accomplish the tap-change operations.

17.2. This is required in order to eliminate oil contamination and the need for oil filtration.

17.3. It is required that the LTC be a proven design with more than 5,000 units in service within the North America.

17.4. Maintenance intervals shall be based solely on the number of operations with maintenance interval of at least 500,000 operations.

17.5. Vacuum type load tap changers shall be provided with a barrier to separate the tap changer from the main transformer tank. The barrier shall be able to withstand full vacuum from either side.

17.6. The load tap-changer compartment shall be equipped as follows:

17.6.1. Drain valve: 1” globe valve with 3/8” sampler

17.6.2. Inspection door: single, hinged, single front inspection door

17.6.3. Fill connection 1” half-coupling

17.6.4. Vacuum connection: 2” half-coupling

17.6.5. PRD with oil baffle

17.6.6. Oil Level Gauge

17.6.7. Maintenance-Free Dehydrating breather

17.6.8. Oil Temperature well
17.6.9. Rain Shield
17.6.10. External gasket stops to protect gaskets from sun deterioration, etc.
17.6.11. Vacuum pressure gauge
17.6.12. Sudden Pressure Relay

17.7. Approved LTC designs include the Reinhausen Manufacturing VACUTAP type RMV II.

18. LTC CONTROL, METERING, AND MONITORING

18.1. The manufacturer shall supply completely automatic, self-contained control equipment shall be mounted in the control cabinet at an accessible height for a person standing on the transformer foundation. The control equipment shall include the following items

18.2. One (1) tap changer control relay, Beckwith Electric Co. M-2001D or equal, to initiate operation of the tap changer in the raise or lower direction as required. The Unit shall also be provided wired out with all necessary interface cables, relays and contacts needed for implementation of the remote control capabilities of this relay

18.3. LTC Control:

18.3.1. M-2001D Digital control
18.3.2. Part number: M-2001D-6L4S20C0D00
18.3.2.1. Com Port 1: ST Fiber Optics
18.3.2.2. Com Port 2: Standard RS-232
18.3.2.3. Ethernet - RJ-45 Copper Wire Connector 10/100 Base-T
18.3.2.4. Protocol: Standard DNP MODBUS only
18.3.2.5. Paralleling: Include Delta VAr, will use Delta VAr-2
18.3.2.6. Other Options: Include DC Backup Input

18.4. Adapter Panel

18.4.1. M-2270B preferred, include SCADA Cutout Switch option.
18.4.2. Model number M-2270B-C.

18.5. Power Supply

18.5.1. Model number M-2026-120 desired.

18.6. Backup

18.6.1. Customer to consider model number M-0329B-C1

18.7. Tap Information

18.7.1. Beckwith Contact Based KeepTrack™ method II.
18.7.2. See Contact KeepTrack Meth2-Sug-Spec Rev04.pdf for specific requirements for LTC provider.

18.8. OEM Requirements for Tap Position Tracking using Contact KeepTrack Method II

18.8.1. Supplier shall provide three normally open cam operated contacts.
18.8.2. The “Aux Raise” contact will close and open only once during each and every raise operation and remain open during all Lower operations.
18.8.2.1. The “Aux Raise” signal will be connected as to provide a pulsing signal for raise indications to the 90 device’s Voltage Reduction Step 1 input.
18.8.3. The “Aux Lower” contact will close and open only once during each and every lower operation and remain open during all Raise operations.
18.8.3.1. The “Aux Lower” signal will be connected as to provide a pulsing signal for lower indications to the 90 device’s Voltage Reduction Step 2 input.
18.8.4. These contacts will be connected to the 12 VDC signal voltage from the 90 device.

18.8.5. The third cam operated contact will close when the Tap changer is on the Neutral Tap Position.

18.8.6. If there are multiple Neutral Taps this contact will remain closed through all of them, or close when on each neutral position even if the tap changer never stops on those positions.

18.8.6.1. This contact will be connected as to provide a pulsing signal from the 90 device's regulated voltage neutral to the device's Neutral Tap Detection input (See Figure 2).

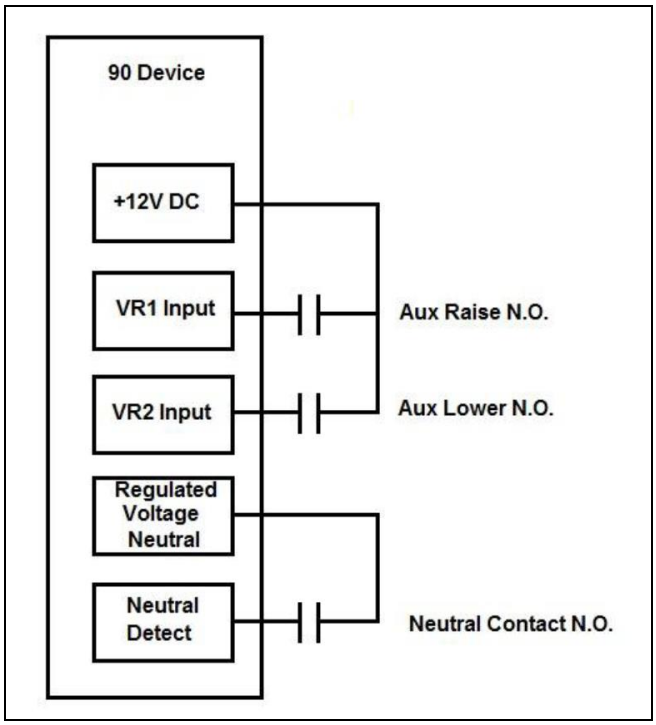

Figure 2 - Tap Position Tracking using Contact KeepTrack Method II

19. OIL PRESERVATION EQUIMENT

Sealed-Tank Construction

19.1. The oil preservation system shall be equipped with a pressure-vacuum bleeder device set to operate at the maximum operating pressures (positive and negative) indicated on the nameplate. The design and mounting arrangement of the associated pressure-vacuum gauge shall provide visibility from the ground. The scale range for the pressure gauge shall be between 10 psig positive and 10 psig negative. A bleed tube for gas blanket dew point measurement shall be provided. Suitable valves shall be provided to permit purging the gas space and testing the seal on the tank by admitting dry nitrogen under pressure

19.2. A nitrogen gas pressure system shall include a pressure-vacuum gauge, pressure relief valves, and alarm contacts to indicate high and low transformer gas pressure

19.3. Pressure-vacuum gauge design and mounting arrangement shall provide visibility from ground level near the transformer

20. COOLING EQUIPMENT

20.1. Radiators:

20.1.1. The transformer shall be provided with a sufficient number of radiators to cool the oil properly and constructed to withstand tank operating pressure and full vacuum.

20.1.2. Radiators shall be equipped with lifting eyes.

20.1.2.1. Removable radiators shall be supplied with individual shut-off valves at each tank connection.

20.1.2.2. Each radiator will be supplied with means for draining and venting.

20.1.2.3. There shall be provisions for draining and filling each radiator individually.

20.1.2.4. The supplier shall furnish suitable valves on the transformer side of the radiator mounting flange along with pipe taps with plugs (minimum 1/2 inch) on the top radiator connections, and capped valves on the bottom connections, to permit draining and removal of the radiators without draining oil from the transformer tank.

20.1.2.5. Provisions shall be made so that it will not be necessary to shut down all of the cooling equipment when removing any one radiator for repair.

20.1.3. Radiators shall be hot dipped galvanized

20.1.4. Complete outline dimensional drawings for the radiators are to be provided, including pipe headers, valve sizes and bolt patterns. The drawings shall be in adequate detail to allow manufacture of replacement radiators by an independent vendor.

20.1.5. Packaging of radiators shall be performed to protect them from paint scratches due to packaging materials and handling.

20.2. Fan Motors:

20.2.1. All fan motors shall be provided with overload protection. In addition, air circuit breakers with manual reset for each group of fans shall be provided. Fans shall be suitable for connection to a 120/240 volt, single phase, 60 Hertz power supply and shall be individually connected to the power supply in a protective and weatherproof manner. The motors shall be totally enclosed without centrifugal clutch and permanently lubricated. The control for adjusting the temperature at which the cooling equipment starts shall be readily accessible.

20.2.2. All fans shall have galvanized fan guards and be provided with one-piece fan blades.

20.2.3. Cooling fans shall be weatherproof, corrosion resistant, and with permanently sealed and lubricated ball bearings

20.2.4. Fans shall be located on the sides (not on the top) of the radiators to provide maintenance accessibility with adequate safety clearances from transformer live parts. Fans shall be mounted on removable brackets supported from the transformer tank.

20.2.4.1. Mounting the fan motors directly to the radiators is **not** acceptable.

20.2.5. Fan guards shall be OSHA approved.

20.3. Radiator valves:

20.3.1. The radiator valves shall be pressure seal type butterfly or flapper valve type.

20.3.2. Outline drawings of the radiator valves shall be submitted for approval.

20.3.3. Radiators valves shall be welded to the transformer tank in both upper and lower header pipe connection points.

20.3.4. Radiators shall be securely attached to the valves by a bolted connection to flanges welded into the tank wall, and the joints shall be made tight by means of suitable gaskets.

21. TANK CONSTRUCTION

21.1. The transformer tank shall be fabricated from steel with sufficient strength to withstand normal service stresses without distortion or damage.

21.2. The tank shall be designed to withstand an internal operating pressure of 8 psi with margin for a minimum of 25% over pressure and full vacuum.

21.3. All tank seams shall be double welded (inside and outside) and shall be a minimum of six (6) inches from the corner.

21.3.1. Corner welds are not acceptable.

21.3.2. Jacking and moving provisions shall be provided on the tank for lifting, jacking. and skidding the transformer onto transport vehicles and into place as necessary that include:

21.3.2.1. Lifting lugs for lifting complete oil filled transformers.

21.3.2.2. Lifting eyes for lifting the cover only.

21.3.2.3. Facilities for lifting core and coil assembly from tank.

21.3.2.4. Jacking facilities at four corners of the base.

21.3.3. Transformer cover shall be domed to shed water and welded to the tank. During welding of the transformer cover, an inorganic gasket will be permanently located between the cover and the tank flange to prevent the entrance of weld spatter into the tank.

21.3.4. The manholes shall have a minimum diameter of 18” and be provided with lifting eyes or handles, and shall be located such that they are accessible without the removal of any other equipment.

21.4. Top of transformer tank shall be graded to shed water and prevent sitting water

21.5. All gasketed openings shall be designed with means provided for controlled compression of the gasket, utilizing metal-to-metal stops, and re-usable gaskets of oil resistant material. All gasketed joints on top of the transformer shall utilize flanges, which are raised at least ¾ inch above the cover surface.

21.6. The bottom of the transformer tank shall be separated from the foundation on which it operates by use of a structure type base or separate galvanized I-beam type supports running the full length of the tank. Complete dimensional data shall be furnished with the outline drawings to show the exact footprint of the base that will sit on the foundation. Structure type bases shall receive an asphaltic or similar corrosion resistant coating.

21.6.1. All external tank supports or stiffeners shall be box beam construction and continuously welded.

21.7. High and low voltage bushings and lightning arresters shall be placed or positioned so that full ANSI BIL levels are maintained for both phase-to-phase and phase-to-ground rated voltages for the unit, as a minimum.

21.8. The shipping height of the transformer shall not exceed 14’-0”.

21.9. Three (3) copper-faced or stainless steel grounding pads with tapped holes, and three (3) clamp type connectors for 4/0 - 500 MCM copper cable range connectors shall be provided for grounding purposes.

21.9.1. Two (2) ground pads shall be located near the base, on opposite corners, on the sides of the tank.

21.9.2. One (1) ground pad shall be located near the core ground bushing.

21.9.3. Mounting of ground pads directly beneath radiators is not acceptable.

21.10. Center of gravity marks, 2”-3” in diameter, shall be stamped on the side and end of the tank.

22. INSULATING OIL

22.1. The insulating oil shall be new, oxidation inhibited Type II mineral transformer oil, as per the latest revisions of ASTM D3487 - 09 and ANSI / IEEE C57.106-2006.

22.1.1. The insulating oil shall be chemically stable and free from acidity or other corrosive ingredients.

22.1.2. The oxidation inhibitor content shall be not less than 0.3% by mass, as determine by ASTM D 1473 or D 2668.

22.2. The transformer shall be shipped filled with oil from the factory (in accordance with section 30.3) to the normal operating level and with dry nitrogen in the gas space at a pressure of (three) 3 psig to insure exclusion of moisture and external atmosphere.

22.3. The manufacturer shall provide a written certification and test report that the transformer oil fully comply with ASTM D3487 – 09.

22.4. The delivered transformer oil and oil used at the factory shall be Non-PCB oil. The manufacturer shall certify on the transformer test report that all oil used in processing and testing the transformer had a "non-detectable" content of polychlorinated biphenyl (PCB's) as determined by test method ASTM D4059 – 00 (2010) and in accordance with current EPA Regulations.

23. PAINT

23.1. Transformer tank and all auxiliary equipment shall be painted with a rust-inhibiting primer and top coat to provide a minimum 3 mil dry film thickness. External paint color shall be Sky Gray, ANSI 70.

23.2. Prior to painting, the exterior surface of the transformer shall be thoroughly cleaned and free from scale, rust, oil, and grease.

23.3. The top of the main tank and LTC compartment shall be provided with a non-skid coating.

23.4. Inside of main tank and LTC compartment shall be painted white.

23.4.1. Prior to painting, the interior surface of the transformer shall be thoroughly cleaned and free from scale, rust, oil, and grease.

23.4.2. Accelerated aging test must be performed on the paint to be used inside the tank.

23.4.2.1. A plate steel sample coated with the white paint shall be submerged in transformer insulating oil and heated to 130 degrees C. After 1,000 hours, there may not be any change in the painted surface, or in the power factor of the oil used for the test.

24. NAMEPLATE

24.1. A nameplate shall be provided and mounted on or near the control cabinet in Segment 1 as per Figure 1-Accessories location excerpt from IEEE Std. C57.12.10-2010.

24.2. The nameplate shall be fabricated from stainless steel and attached with stainless steel hardware.

24.3. The nameplate shall be as per latest revision of ANSI/IEEE C57.12.00, Paragraph 5.12.

24.3.1. Nameplate C shall be used on transformers rated above 500 kVA.

24.3.1.1. The ratings of the transformer shall be referenced in MVA

24.4. The following additional information shall be stated on the nameplate:

24.4.1. Current values for the maximum 65 degree C MVA rating for all tap positions.

24.4.2. All current transformers must include polarity marks, ANSI/IEEE tap identification, and relay accuracy class.

24.5. For LTC transformers, the transformer nameplate shall also include the booster ratio data when applicable.

24.6. Load Tap Changer nameplate shall include the following information:

24.6.1. Manufacturer of the mechanism.

24.6.2. Model number of the mechanism.

24.6.3. Year of manufacture.

24.6.4. Maximum rated through current of the mechanism.
24.6.5. Type of transition impedance, resistor, or reactor.
24.6.6. Method of arc interruption (Type of Mechanism)
24.6.7. Type of drive mechanism, energy spring or direct drive
24.6.8. Amount of oil in the mechanism compartment.

25. FACTORY TESTS

25.1. The tests shall include, but not be limited to, all of the routine tests as described in ANSI/IEEE C57.12.00-2006, Section 8 and as defined in ANSI/IEEE C57.12.80-2010.

25.2. The following tests shall be performed on all transformers in accordance with methods outlined in ANSI/IEEE C57.12.00-2006, Table 21 to include all Routine and Design tests for 500 kVA and larger

25.2.1. Resistance measurements of all windings on the rated voltage tap and at the tap extremes of the first unit made on a new design
25.2.2. Winding insulation resistance
25.2.3. Core insulation resistance
25.2.4. Ratio tests on the rated voltage connection and on all tap connections
25.2.4.1. Ratio tests on load tap changing transformers shall be made
25.2.4.1.1. At all connection positions of the tap changer for de-energized operation with the load tap changer on the rated voltage position.
25.2.4.1.2. At all load tap changer positions with the tap changer for de-energized operation on the rated voltage position
25.2.5. Polarity and phase relation tests on the rated voltage connection
25.2.6. Insulation power factor
25.2.6.1. Doble test equipment shall be used for this test
25.2.7. No-load losses and excitation current at 100 and 110% of rated voltage and at rated power frequency on the rated voltage tap connection(s).
25.2.8. Impedance voltage and load loss at rated current and rated frequency on the rated voltage connection, and at the tap extremes of the first unit of a new design.
25.2.9. Temperature rise
25.2.9.1. At minimum and maximum ratings of the first unit of a new design
25.2.10. Dielectric tests
25.2.10.1. Low frequency
25.2.10.2. Low frequency on auxiliary devices, control, and current transformer circuits
25.2.10.3. Lightning impulse
25.2.10.4. Partial discharge test
25.2.11. Audible sound level
25.2.11.1. Audible sound level test shall also be performed at the tap connection which would result in the highest sound level
25.2.12. Operation test of all devices
25.2.13. Dissolved gasses in oil analysis
25.2.14. Mechanical
25.2.14.1. Lifting and moving devices
25.2.14.2. Pressure
25.2.14.3. Leak test

25.3. All current transformers shall be tested as per the latest revision of ANSI/IEEE C57.13-2008, Clauses 6.11 & 8.

25.3.1. CT curves shall be furnished for all CTs and will be used for relaying applications

25.3.2. Routine accuracy tests for current transformers with a relay accuracy rating shall be made on each transformer and shall consist of a turns ratio check, secondary excitation, and RCF measurements at the voltage at 100% rated current with standard rated burden.

25.4. CLW's project engineer(s) shall be notified at least four (4) weeks prior to tanking the core and coil assembly and testing to arrange travel requirements to inspect the unit and to witness final tests.

25.5. Five certified copies of the certified test report shall be delivered to the purchaser after completion of all factory tests.

25.5.1. Test reports shall be received by the project engineer(s) before shipment of the transformer.

25.5.2. A complete set of digital photographs of the core and coil assembly shall be furnished and emailed to project engineers. The photographs shall be taken just prior to placing the completed core and coil assembly into the tank. All photographs shall be of high resolution and properly labeled as to the views taken. Five different views shall be provided as follows:

25.5.2.1. Top view

25.5.2.2. Front view

25.5.2.3. Left side view

25.5.2.4. Rear view

25.5.2.5. Right side view

25.6. Any deficiencies or failures during final testing shall be thoroughly reported, in writing, to the project engineer(s) prior to re-testing.

25.7. Desired optional factory tests:

25.7.1. Zero Sequence impedance tests

25.7.2. Baselines for field acceptance test data including:

25.7.2.1. SFRA testing in factory base line

25.7.2.2. SFRA testing on site

26. LOSS GUARANTEE

26.1. The losses quoted on the proposal form - i.e. No-Load, Load, and Auxiliary, shall be considered guaranteed maximum values. The values quoted will be compared to the actual test values to determine conformance.

26.2. If the test values exceed the quoted values, then a credit shall be due to CLW in accordance with the following:

26.2.1. No load losses - $7,000/kW

26.2.2. Load losses at 15 MVA - $600/kW

26.2.3. Auxiliary Losses - $800/kW

26.3. The measurements shall be made under the following conditions and as per ANSI/IEEE C57.12.00-1993, Section 5.9:

26.4. No-Load Losses shall be measured and corrected to an ambient temperature of 20 degrees C.

26.4.1. Load Losses shall be measured at 85 degrees C, 15 MVA.

26.4.2. Auxiliary Losses shall be measured and corrected to an ambient temperature of 20 degrees C, 15 MVA.

27. LOSS EVALUATION

27.1. Transformer load losses shall be determined by using an “average” of the losses measured with the LTC at the 16 Raise, 1 Raise, Neutral, 1 Lower and 16 Lower LTC tap positions. For the purpose of determining the best bid, all transformer losses shall be measured at rated voltage, frequency and at 15 MVA. An amount in dollars shall be added to the quoted price based on the following factors:

27.2. The loss measurement system used to measure losses shall be tested for accuracy by an independent agency.

- 27.2.1. A certified measurement error report shall be made available to the project engineer(s) before the bid opening.
- 27.2.2. Testing of measurement systems shall follow the procedure described in NBS Technical Note 1204.
- 27.2.3. The test system accuracy for each quantity measured shall fall within the limits specified in ANSI/IEEE C57.12.00-1993, Section 9.4, Table 20.
- 27.2.4. The frequency of the test source shall be within ±0.5% of the rated frequency of the transformer.

27.3. In the event that the certified test report called for in Paragraph 27.2.1 shows that the transformer losses at rated voltage and frequency exceed the guaranteed losses stated in the proposal data, the manufacturer shall credit CLW the difference between the certified losses and the guaranteed losses.

27.4. In determining the Cost of Ownership Calculation, the penalty values in Section 26 will be used for evaluation.

28. DRAWINGS

28.1. Drawings shall be submitted to the project engineer(s) for approval before manufacturing of equipment.

28.2. Each drawing shall include the CLW purchase order number and the name of the CLW substation that the equipment is designed to operate.

28.3. Three (3) sets of approval drawings for the transformer shall be submitted and shall include the following:

- 28.3.1. Transformer outline drawings showing physical dimensions, weights, center of gravity, and location of all accessories, including a detailed list of all accessories.
- 28.3.2. Nameplate drawing.
- 28.3.3. All schematic and wiring diagrams.
  - 28.3.3.1. Tabular type wiring drawing will not be acceptable.
- 28.3.4. These drawings shall locate each piece of equipment and terminal blocks, and indicate individual wiring between each item.
- 28.3.5. CT excitation curves.
- 28.3.6. Original equipment manufacturer drawings and catalog/part numbers for equipment as follows:
  - 28.3.6.1. HV, LV, N, and core ground bushings
  - 28.3.6.2. High and low voltage surge arresters
  - 28.3.6.3. All gauges
  - 28.3.6.4. Switches

28.4. The manufacturer shall furnish the project engineer(s) with a complete list of all items, which will be sent on each shipment, i.e. number of boxes, bundles, pieces, etc. and the

contents of each. This list shall be received by the project engineer(s) prior to shipment from the factory. The manufacturer will be notified of any items not received at time of delivery.

28.5. All final drawings shall be submitted in 24” x 36” hard copies and a CD Intergraph CAD system DWG file.

29. INSTRUCTION BOOKS

29.1. The manufacturer shall provide four (4) instruction books and a PDF copy.

29.2. These instruction books shall contain information on receiving, storing, assembly, routine maintenance, and testing of the transformer.

29.3. The instruction books shall be high quality original documents.

29.3.1. Photocopies will not be accepted.

29.4. A complete set of OEM final drawings shall be included in the back of the instruction books

29.5. The instruction books shall include but not be limited to the following:

29.5.1. Table of contents and index tabs

29.5.2. Specifications, test data and curves

29.5.3. Description of the equipment

29.5.4. Operating Instructions

29.5.5. Instructions in the methods of receiving, inspection, storage and handling

29.5.6. Complete installation and maintenance instructions

29.5.7. Assembly drawings

29.5.8. Parts lists

29.5.9. Schedule of required lubricants for the LTC mechanism

29.5.10. Nameplate information and shop order numbers for each item of equipment and component part

29.5.11. Instructions of accessories

30. SHIPPING AND OFF-LOADING

30.1. The transformer shall be completely assembled at the factory to assure fit of all components and accessories then disassemble necessary parts for shipping.

30.2. The manufacturer is responsible to ship the transformer F.O.B. destination to lake Worth, Florida. The manufacturer shall assume responsibility for safe arrival and handle all claims if damaged in shipment.

30.2.1. For truck shipment, the destination shall be the substation site.

30.2.2. For rail shipment, the destination shall be the rail siding nearest to the substation site to which the manufacturer can obtain clearance for shipment.

30.3. The transformer shall be shipped from the factory oil-filled if weight limitations allow.

30.4. The manufacturer shall supply a new set of gaskets to be installed on all loose accessories and discard any gaskets that may have been installed during shipping. This is to insure that all gaskets installed were not exposed to damage during shipping.

30.5. The manufacturer shall furnish a list of equipment that will be removed/disassembled from the transformer to meet shipping and freight constraints.

30.6. Electronic Impact recorders with GPS technology for on-line shipment tracking and reporting of the magnitude of axial, transverse, and vertical forces shall be provided with all rail shipments.

30.6.1. The manufacturer shall mount them at the factory to provide a permanent record of the equipment will be subjected while in transit.

30.6.2. The impact recorders shall be returned to the manufacturer.

30.7. All valves, shipping covers, etc. shall be sealed and effectively crated to prevent tampering or removal while in transit.

30.8. All conduits and auxiliary equipment mounting positions shall be sealed and/or covered to prevent water damage during shipment and storage.

30.9. All equipment furnished hereunder which requires packaging shall be clearly labeled with the CLW purchase order number, substation name, item number (corresponding to the suppliers Bill of Materials) and a description of the contents enclosed.

30.10. Any package, which contains more than one (1) item, shall have a separate packing list attached for the specific contents of that package.

30.11. All equipment and packages shipped separate from the transformer shall be shipped either on pallets or bundled in an acceptable manner for off-loading.

30.12. The method of packing shall be such as to adequately protect the contents from any damage that might reasonably be encountered in transportation and handling.

30.12.1. Packing crates shall be such that long outdoor storage will not result in deterioration of crates or damage to contents.

30.12.2. Any equipment, which requires protection from the weather, shall use packing material such that it will provide weatherproof protection for a period of one (1) year in outdoor storage areas.

30.12.3. Any packages, which require indoor storage, shall be clearly marked.

30.12.4. Prior to shipment, the project engineer(s) shall receive a complete packing list of all items to be shipped in order to check for complete shipment upon arrival.

30.13. All spare parts shall be packaged separately and clearly marked “SPARE PARTS”.

30.13.1. The spare parts shall be shipped separate from the transformer and shall be delivered F.O.B. to:

City of Lake Worth Utilities
1900 2ND Ave North
Lake Worth, Florida 33461
Attn: George Guirguis

30.13.2. CLWU will make arrangements with a local crane services company to off-load the transformer(s)

31. FIELD ENGINEER SERVICES

31.1. The manufacturer shall provide the services of a Field Engineer to provide technical direction and supervision to CLW for erecting the transformer.

31.2. This shall include, but not limited to, oil filling radiators, testing, commissioning, and shall assist in placing in operation and in making necessary adjustments of the equipment and any other activity needed to place the transformer in service.

31.2.1. The manufacturer shall include in the Bid Form the estimated cost of field engineer services.

31.2.1.1. The price shall include travel and per diem during the entire duration.

31.3. The Field Engineer must be thoroughly knowledgeable and experienced in the installation of the specific transformer and all of its parts and accessories.

31.4. CLW reserves the right to delete the Field Engineer service requirements from the Bid Proposal.

31.5. The Field Engineer service cost will not be used for the bid evaluation.

31.5.1. CLW also reserves the right to refuse the services of the Field Engineer, after issuing a P.O., unless required by the manufacturer, and deduct that amount from the payment schedule.

32. SPARE PARTS

32.1. A list of recommended spare parts shall be included with the bid. This list shall include a complete description of the part, including manufacturer, catalog number and or part number, and prices for each item. The spare parts list prices will not be used to award the bid.

32.2. The spare parts list shall include, but not limited to, the following parts for each transformer:

32.2.1. One (1) high voltage bushing (34.5 kV)

32.2.2. One (1) low voltage bushing (25 kV)

32.3. If additional spare parts are required for general maintenance procedures, they shall be included on this list.

32.4. CLW reserves the right to purchase any or all of the spare parts on the spare parts list. Only those parts required to meet inventory requirements will be purchased.

33. WARRANTY

33.1. It is the responsibility of the vendor/manufacturer to offer the warranty specifications for evaluations. However, at minimum, the warranty shall be five years.

34. PAYMENT TERMS

34.1. Payment installments shall be 90% upon shipment, 10% upon acceptance or 30 days from delivery, whichever occurs first.

35. LIQUIDATED DAMAGES FOR LATE DELIVERY

35.1. In case the materials are not delivered within the period stipulated in the order, the supplier shall be liable to pay liquidated damages at the discretion of the competent authority of the Board.

35.2. The liquidated damages may be up to one percent per week, or part of week, on the price subject to a maximum of cumulative ceiling of 10% reckoned on the contract value of the equipment delayed. Also, this included the delayed delivery of a portion supplied which could not be brought into commission due to any part thereof not having been delivered in time.

35.3. Due consideration may be given in the levy of liquidated damages for reasons absolutely beyond the control of the supplier, for which documentary evidence shall be produced to the satisfaction of the competent authority of the Board.

35.4. The Board shall be entitled to deduct/recover the amount of liquidated damages from the current bill payable to the supplier or any other amount due or payable to him against this or any other contract.

36. DELIVERY SCHEDULE

36.1. CLWU will be ready to accept the first 4 transformers in 12 to 18 months ARO (After Receipt of Order)

36.2. CLWU will be ready to accept the 4 additional transformers in 36 months ARO

END OF SECTION 1- SPECIFICATION

SECTION 2 - INSTRUCTIONS TO BIDDERS

To ensure acceptance of your bid, Bidders must comply with the following instructions:

1. HOW TO SUBMIT A BID:

a. **The original and three (3) copies** of your bid must be submitted in a sealed envelope, marked on the outside lower left-hand corner of the envelope with the Bid number, title, and date and hour bids are scheduled to be received. Sealed bids shall be mailed or hand-delivered to:

City of Lake Worth – Finance Office – 2nd Floor
7 North Dixie Highway
Lake Worth, FL 33460

b. Time is of the essence and any bid received after the closing date and time indicated on the cover of the Invitation for Bid, whether by mail or otherwise, will be returned unopened and will not be considered. The time of receipt shall be determined by the time clock located in the Finance Office. Bidders are responsible for insuring that their bid is stamped by City personnel by the deadline indicated. The City shall in no way be responsible for delays caused by any occurrence.

c. Bids submitted by telephone, telegram facsimile or email shall not be accepted.

d. Submission of a Bid implies a full understanding of the Invitation for Bid, the Special Terms, the General Conditions and the drawings and specifications, the Project and the Work. Any misunderstanding as to such terms by the Bidder will not relieve the Bidder from performance.

e. This Invitation for Bid consists of this document along with all plans, drawings and/or technical specifications related to this procurement, all of which are incorporated herein by this reference.

2. THE BID PACKAGE. The Bid Submission Package consists of the following documents:

B1 Bid Cover Sheet
B2 Bid
B3 Schedule of Bid Items
B4 Reference List
B5 Drug Free Certification

The Bid Submission Package, and any other required documents must be returned in order for the bid to be considered.

AVOID BID REJECTION*:* Bids may be rejected for noncompliance to requirements after review by the Finance Office. All bids must be submitted on the provided Bid forms (B1 – B5), as applicable to this IFB. **Form B-2 and B-3 must be signed in ink by an officer authorized to bind the Bidder.**

3. COMPLETION OF BID SUBMISSION PACKAGE.

a. It is the responsibility of the bidder to insure that all pages are included. All Bidders are advised to closely examine this package.

b. **All bids must be submitted on the provided Bid forms (B1 – B5), as applicable**. Bids submitted on Contractor Letterhead or quotation forms will not be accepted.

c. Bid forms must be neatly written in ink or typed, and must be signed in ink by an officer or employee having authority to bind the company or firm (where a signature is required). **Failure to submit a duly signed bid shall be cause for rejection of the bid.**

4. ERRORS/ERASURES/CORRECTIONS

a. **Bids having erasures or corrections must be initialed in ink by the Bidder.** If a correction is necessary, draw a single line through the entered figure and enter the corrected figure above it and initial the correction. Any illegible entries, pencil bids or corrections not initialed may not be accepted.

b. In the event of mathematical extension error(s), the unit price will prevail and the bidder's total offer will be corrected accordingly. In the event of addition errors, the extended line item will prevail and the bidder's total will be corrected accordingly.

c. Bidders shall not be allowed to modify their bids after the bid opening time and date. Bid files may be examined during normal working hours, after bid opening, by appointment only.

d. Bidder represents that it has taken all necessary steps to ascertain the nature and location of the work and that it has investigated and satisfied itself as to the general and local conditions which can affect the performance of the work, including: (i) conditions relating to access, egress, transportation, debris disposal, parking and storage of materials; (ii) availability of labor; and (iii) physical conditions at the site. Any failure by Bidder to take these steps will not relieve the Bidder from the responsibility for estimating properly the difficulty and cost of successfully performing the work without additional expense to Owner.

5. CERTIFICATION AND LICENSES. Bidder must include with its bid package a copy of all applicable Certificates of Competency issued by the State of Florida or the County Construction Industry Licensing Board and a current Occupational License in the name of the Bidder submitting the Bid from the County in which the Bidder's principal place of business is located. If awarded the contract, any Bidder who is not required to have an occupational license from the City will be required to obtain a Certificate of Registration from the City of Lake Worth prior to contract execution.

6. NO LOBBYING. In accordance with the Palm Beach County Lobbyist Registration Ordinance and Section 2-112(k) the City's procurement code, the City's procurement cone of silence will be in effect as of the due date for proposals in response to this IFB. A complete copy of the City's procurement code is available on- line at municode.com under the City's code of ordinances (sections 2-111 – 2-117). All Proposers are highly encouraged to review the same. In summary, the cone of silence prohibits communication between certain City officials, employees and agents and any entity or person seeking to be awarded a contract (including their representatives, lobbyists and potential subcontractors). The cone of silence terminates at the time of award, rejection of all response or some other action by the City to end the selection process

7. CONFLICT OF INTEREST AND ETHICS REQUIREMENTS. This IFB is subject to the State of Florida Code of Ethics and the Palm Beach County Code of Ethics. Accordingly, there are prohibitions and limitations on the employment of City officials and employees and contractual relationships providing a benefit to the same. Bidders are highly encouraged to review both the Florida Code of Ethics and the Palm Beach County Code of Ethics in order to insure compliance with the same.

Further, any Bidder coming before the City Commission for an award of a contract and who has made an election campaign contribution in an amount that is more than one hundred dollars ($100.00) to any elected official of the City Commission, who is a current sitting member of the Commission, must disclose such election campaign contribution, verbally and in writing, in their responsive proposal to this IFB.

8. PUBLIC ENTITY CRIMES. Pursuant to section 287.133, Florida Statutes, a person or affiliate who has been placed on the convicted vendor list maintained by the State of Florida may not submit a bid to the City as agent for the ECR Board for 36 months following the date of being placed on the convicted vendor list.

9. INQUIRIES AND ADDENDA. Any and all inquiries on the scope of work, specifications, additional requirements, attachments, terms and general conditions or instructions, or any issue, must be directed in writing, by US mail, fax or email to:

Hirut Darge, Purchasing Agent
City of Lake Worth, Finance Office
7 N. Dixie Hwy.
Lake Worth, Fl 33460
E-mail: hdarge@lakeworth.org
(561) 586-1651

Any addenda or other modification to the Bid documents will be issued by the City prior to the date and time of Bid closing, as a written addenda distributed to all prospective bidders who have obtained the bid package directly from the City or its authorized representative. Such written addenda or modification shall be part of the Bid documents and shall be binding upon each Bidder. Each Bidder is required to acknowledge receipt of any and all addenda in writing and submit with their bid. No Bidder may rely upon any oral or verbal modification or interpretation in preparing its bid. No interpretation of the Invitation to Bid will be made for any bidder, except by written addendum.

10. ACCEPTANCE; REJECTION; CANCELLATION. In accordance with the City's procurement code, this Invitation for Bid may be cancelled and may or may not be re-bid when determined to be in the best interests of the City. Any or all bids may be accepted or rejected in whole or in part, when determined to be in the best interests of the City. The City also reserves the right to reject the bid of any Bidder who has previously failed in the performance of an award or to deliver contracts of a similar nature on time or who is not in a position to perform properly under this award. The City reserves the right to inspect all facilities of bidders. Any bid received without an authorized signature or past the submittal deadline will be rejected.

Any withdrawal or cancellation of this Invitation for Bid, either before or after selection of a bidder, shall be without liability or obligation on the part of the City or its employees. Any action, selection or failure to select a successful bidder to this Invitation for Bid shall be without any liability or obligation of the part of the City or its employees.

The City reserves the right to waive any non-material irregularities and technicalities, except timeliness and signature requirements. Additionally, bids may be considered irregular and may be rejected if the bid: 1) does not strictly conform to the requirements of the Invitation for Bid; 2) is incomplete; 3) any Bid Form is altered; 4) contains additions not called for; 5) is conditional; 6) contains prices that are, in the opinion of the City, unbalanced either in excess or below the reasonable cost analysis values; 7) bids is in excess of the approved budget for the project.

11. SELECTION OF BIDDER WITH WHOM TO CONTRACT. The selection of a bidder with whom to contract shall be based on the "best value" to the City using the following criteria:

Definition:

Responsive bidder: One who meets all the specifications and conditions of the bid at the time of opening.

Responsible bidder: One who is capable of performing the scope of work in terms of ability, capacity, skill, deliver/completion time, financial capacity, quality of performance on previous contracts and ability to provide future maintenance or service.

1. Qualifications;
2. Skill and experience based on reference verification;
3. Amount of the bid in relation to the needed goods & services and in relation to other bids received; and,
4. Adherence to the specifications and requirements of the IFB.

12. POSTING OF AWARD TABULATIONS. The selected bidder will be notified in writing with intent to award a contract. Recommended awards will be available for review by interested parties at the Finance Office.

13. CONTRACT. The City and successful bidder will be contractually bound only if and when a written contract between the parties is executed by the City. In the event a contract is not executed with the selected bidder and City reserve the right to select the next "best value" bidder based on the bid tabulation and to contract with said bidder.

14. PROCUREMENT CODE. The City's Procurement Code, sections 2-111 to 2-119 of the City's Code of Ordinances, shall govern this IFB. If there are any inconsistencies between this IFB and the Procurement Code, the Procurement Code shall take precedence.

15. COSTS. All costs incurred by any party in responding to this Invitation for Bid are the sole responsibility of the Bidder.

16. PROTEST PROCEDURE. *Please see* section 2-115 of the City's Procurement Code for the procedure.

17. CITY IS DOCUMENT GATEKEEPER. This IFB is issued directly by the City and the City shall be the sole distributor of all addenda and/or revisions to these documents. It is the responsibility of the Bidder to confirm the legitimacy of procurement opportunities or notices directly with the Procurement Office. The City is not responsible for any solicitations advertised by subscriptions, publications, websites (other than the City's) or other sources not connected with the City and the Bidder should not rely on such sources for information regarding ay solicitation made by the City of Lake Worth.

18. SMALL BUSINESS AND LOCAL BUSINESS PREFERENCE. Section 2-117 of the City's Procurement Code shall govern the application of a small business and/or local business preference for this IFB. **Documentation to support a Bidder as a Small Business and/or Local Business must be submitted with the response to the IFB.** Documentation submitted after the bid deadline will be rejected.

19. PROPERTY OF THE CITY. All materials submitted in response to this IFB become the property of the City. The City has the right to use any or all ideas presented in any response to this IFB, whether amended or not, and selection or rejection of a proposals does not affect this right. No variances to this provision shall be accepted.

20. DISCLOSURE AND DISCLAIMER. The information contained herein is provided solely for the convenience of the Bidders. It is the responsibility of each Bidder to assure itself that information contained herein is accurate and complete. Neither the City, nor its advisors provide any assurances as to the accuracy of any information in this IFB. Any reliance on the contents of this IFB regarding the project or scope of thereof, or on any oral communications with City representatives or advisors, shall be at each Bidder's own risk. Bidders should rely exclusively on their own investigations, interpretations and analyses in connection with this matter. This IFB is being provided by the City without any warranty or representation, express or implied, as to its content, accuracy or completeness and no Bidder or other party shall have recourse to the City if any information herein contained shall be inaccurate or incomplete. No warranty or representation is made by the City that any bid or proposal conforming with these requirements will be selected for consideration, negotiation or approval.

Any action taken by the City in response to bids or proposals made pursuant to this IFB or in making any award or failure or refusal to make any award pursuant to such bids or proposals, or in any cancellation of award, or in any withdrawal or cancellation of this IFB, either before or after issuance of an award, shall be without any liability or obligation on the part of the City, or their advisors.

Any recipient of this IFB who responds hereto fully acknowledges all the provisions of this Discloser and Disclaimer and agrees to be bound by the terms hereof. Any proposal submitted pursuant to this IFB is at the sole risk and responsibility of the party submitting such proposal.

21. CONTRACT AGREEMENT / COMPENSATION. The terms and conditions of the resulting contract will be pursuant to a standard City agreement. If the successful bidder will not cannot agree on the terms and conditions of the resulting contract, the City reserves the right to disqualify the successful bidder and move to the next ranked bidder to enter a standard City agreement. This process may continue until the City is able to enter into a contract with a Bidder. The resulting contract shall be for the scope of work identified herein. However, since the scope of work is being solicited and submitted based on unit prices, the City reserves the right to amend the resulting contract if the City needs additional services which are consistent with and based on the unit prices submitted.

22. COMPLIANCE. All bids or proposals received in accordance with this IFB shall be subject to applicable Florida Statutes governing public records including without limitation Chapter 119, Florida Statutes.

END OF SECTION 2 - INSTRUCTIONS TO BIDDERS

(B1)

BID PACKAGE COVER SHEET

IFB # 15-116	Project Title: **15 MVA POWER TRANSFORMERS**

Bidder Company Name: ……

Enclose the following documents:

_____ 1. Bid Package Cover Sheet. (B1)

_____ 2. Bid (B2) **Must be signed**.

_____ 3. Schedule of Bid Items (B3) **Must be signed**.

_____ 4. Reference List (B4)

_____ 5. Drug Free Certification (B5)

Clearly mark the outside lower left corner of the Envelope with the Invitation for Bid number and title, and the Date and Time for the bid closing deadline.

THIS PAGE AND THE FOLLOWING PAGES ARE TO BE RETURNED WITH YOUR BID.

Submit ONE (1) ORIGINAL and THREE (3) PHOTOCOPIES of your Bid package.

AVOID BID REJECTION*:*
All bids must be submitted on the provided Bid forms (B1 – B5).
Form B2 and B3 must be signed in ink by an officer authorized to bind the Bidder.
All Forms must be fully completed.

BID

IFB # 15-116

15 MVA POWER TRANSFORMERS

Proposal of: _____
(Bidder Company Name)

Bid Amount: $_____

_____

_____
(Write Dollar Figure Here)

Bidder agrees to furnish, unless otherwise provided, all implements, machinery, equipment, transportation, tools, materials, supplies, labor and other things necessary for the performance and completion of the work for the amount indicated above.

The undersigned Bidder hereby declares that:

1. This bid is made in good faith, without collusion or fraud and is fair and competitive in all respects.

2. **By signing and submitting this Bid, Bidder represents that all Bid Forms are fully complete and accurate**.

3. Bidder acknowledges that the Bid may be rejected if all Bid Forms are not fully complete, not accurate or if forms are not signed by properly authorized signatures where required.

Name of Firm: _____

HQ Address: _____ ST_____ Zip_____

Phone: (_____) _____ Email: _____

FEIN: _____ State of Incorporated: _____

Print Name: _____ Title: _____

SIGNATURE: _____ Date: _____

Sales Office: _____ ST_____ Zip_____

Sales Contact Name: _____ Title: _____

Phone: (_____) _____ Email: _____

Failure to fully complete and sign this Bid Form may result in rejection of the Bid.

IFB #15-116

15 MVA POWER TRANSFORMERS

SCHEDULE OF BID ITEMS

In accordance with the scope of work and specifications noted in this IFB document, following are the fixed prices to provide all required.

No.	QTY	DESCRIPTION	DELIVERY	PRICE	TOTAL PRICE
OPTION 1					
1.	4	15 MVA POWER TRANSFORMERS ***(FIRM PRICE)***	12 to 18 Month		
OPTION 2					
2.	4	15 MVA POWER TRANSFORMERS ***(FIRM PRICE)***	12 to 18 Month		
3.	4	15 MVA POWER TRANSFORMERS ***(PRICE WITH CPI) Accept price adjustments based on material cost***	36 MONTH		
OPTION 3					
4.	4	15 MVA POWER TRANSFORMERS ***(FIRM PRICE)***	12 to 18 Month		
5.	4	15 MVA POWER TRANSFORMERS ***(FIRM PRICE)***	36 MONTH		

Name of Firm: _____

Address: _____ ST_____ Zip_____

Phone: (_____) _____ Email: _____

Print Name: _____ Title: _____

SIGNATURE: _____ Date: _____

(B4)

IFB # 15-116

15 MVA POWER TRANSFORMERS

LIST OF REFERENCES

1. Owner's Name & Address: _____

_____

Project: _____

Contact Person: _____

Telephone: ( ) _____ Fax: ( )_____

E-Mail: _____

2. Owner's Name & Address: _____

_____

Project: _____

Contact Person: _____

Telephone: ( ) _____ Fax: ( )_____

E-Mail: _____

3. Owner's Name & Address: _____

_____

Project: _____

Contact Person: _____

Telephone: ( ) _____ Fax: ( )_____

E-Mail: _____

IFB # 15-116

15 MVA POWER TRANSFORMERS

DRUG FREE WORKPLACE CERTIFICATION

The undersigned Bidder, in accordance with Florida Statute 287.087 hereby certifies that

_____ does:
(Name of Business)

1. Publish a statement notifying employees that the unlawful manufacture, distribution, dispensing, possession, or use of a controlled substance is prohibited in the workplace and specifying the actions that will be taken against employees for violation of such prohibition.

2. Inform employees about the dangers of drug abuse in the workplace, the business' policy of maintaining a drug-free workplace, any available drug counseling, rehabilitation, and employee assistance programs, and the penalties that may be imposed upon employees for drug abuse violations.

3. Give each employee engaged in providing the commodities or contractual services that are under this bid a copy of the statement specified in subsection (1).

4. In the statement specified in subsection (1), notify the employees that, as a condition of working on the commodities, or contractual services that are under bid, the employee will abide by the terms of the statement, and will notify the employer of any conviction of, or plea of guilty, or *nolo contendre* to any violation of Chapter 1893, or of any controlled substance law of the United States, or any State, for a violation occurring in the workplace no later than five (5) days after such conviction.

5. Impose a sanction on, or require the satisfactory participation in a drug abuse assistance, or rehabilitation program, if such is available in the employee's community, by any employee who is so convicted.

6. Make a good faith effort to continue to maintain a drug-free workplace through implementation of this section.

As the person authorized to sign the statement, I certify that this firm complies fully with the above requirements.

_____
Bidders Authorized Signature

Print Name: _____

_____
Date