INSTRUMENT NUMBERING LEGEND

FIRST DIGIT (X) AREA PROCESS NUMBER	SECOND DIGIT (Y) LOOP NUMBER	THIRD DIGIT (Z)	THIRD DIGIT SUFFIX
1 – WASTE WATER PUMPING	SYSTEMATIC SEQUENTIAL NUMBERING OF FUNCTION STEPS THRU UNIT PROCESS	1 – UNIT 1 2 – UNIT 2 3 – UNIT 3 4 – UNIT 4 5 – UNIT 5 6 – UNIT 6 7 – UNIT 7 8 – UNIT 8 9 – UNIT 9	ADDITIONAL SEQUENTIAL NUMBERING FOR CONVENIENCE (AS APPLICABLE)
2 – ODOR CONTROL			
3 – NOT USED			
4 – NOT USED			
5 – NOT USED			
6 – NOT USED			
7 – NOT USED			
8 – NOT USED			
9 – NOT USED			
0 – NOT USED			

AE XYZ XX — FUNCTIONAL INDENTIFICATION PER ISA STANDARD S5.1

XX – ANALYZER
CLR – CHLORINE RESIDUAL
COND – CONDUCTIVITY
DO – DISSOLVED OXYGEN
TURB. – TURBIDITY
pH – pH
TSS – TOTAL SUSPENDED SOLIDS

MEANINGS OF IDENTIFICATION LETTERS

	FIRST LETTER		SUCCEEDING LETTERS		
	MEASURED OR INITIATING VARIABLE	MODIFIER	READOUT OR PASSIVE FUNCTION	OUTPUT FUNCTION	MODIFIER
A	ANALYSIS		ALARM		
B	USERS' CHOICE		USER'S CHOICE	USER'S CHOICE	USER'S CHOICE
C	CONDUCTIVITY (ELECTRICAL)			CONTROL	
D	DENSITY (MASS) OR SPECIFIC GRAVITY	DIFFERENTIAL			
E	VOLTAGE (EMF)		PRIMARY ELEMENT		
F	FLOW RATE	RATIO (FRACTION)			
G	GAUGING (DIMENSIONAL)		GLASS		
H	HAND (MANUALLY INITIATED)		AUDIBLE HORN		HIGH
I	CURRENT (ELECTRICAL)		INDICATE		
J	POWER	SCAN			
K	TIME OR TIME SCHEDULE			CONTROL STATION	
L	LEVEL		LIGHT (PILOT)		LOW
M	MOISTURE OR HUMIDITY				MIDDLE OR INTERMEDIATE
N	AMPLITUDE		USER'S CHOICE	USER'S CHOICE	USER'S CHOICE
O	USER'S CHOICE		ORIFICE (RESTORATION)		
P	PRESSURE OR VACUUM		POINT (TEST CONN.)		
Q	QUANTITY OR EVENT	INTEGRATE OR TOTALIZE			
R	RUN		RELAY		
S	SPEED OR FREQUENCY	SAFETY		SWITCH	
T	TEMPERATURE			TRANSMIT	
U	MULTIVARIABLE		MULTIFUNCTION	MULTIFUNCTION	MULTIFUNCTION
V	VISCOSITY			VALVE, DAMPER OR LOUVER	
W	WEIGHT OR FORCE		WELL		
X	FAILURE				
Y	USER'S CHOICE			RELAY OR COMPUTE	
Z	POSITION			DRIVE, ACTUATE OR UNCLASSIFIED FINAL CONTROL ELEMENT	

PROCESS & INSTRUMENTATION LEGEND

- STATUS LIGHT, PANEL MOUNTED
- AUDIBLE HORN
- PANEL MOUNTED DEVICE
- SUB PANEL MOUNTED DEVICE
- FIELD MOUNTED DEVICE
- COMPUTER FUNCTION
- PLC FUNCTION
- NEW PANEL MOUNTED INTERLOCK (HARDWIRED)
- CONTINUATION
- WIRING CONTINUATION
- HOSE CONNECTION
- ANNUNCIATOR WINDOW/POINT
- SOLENOID VALVE
- FLUSHING CONNECTION
- SAMPLE POINT
- CONTROL SIGNAL RELAY
- MANUAL BUTTERFLY VALVE
- MANUAL GATE VALVE
- MANUAL BALL VALVE
- SWING ARM CHECK VALVE
- ROTAMETER
- FLOW ELEMENT (VENTURI)
- FLOW ELEMENT (ORIFICE PLATE)
- FLOW RESTRICTER
- LEVEL (BUBBLE TUBE)
- LEVEL (FLOAT)
- CHEMICAL METER PUMP
- FLOW METER (MAGNETIC)
- PLC INPUT/OUTPUT POINT
- DIAPHRAM
- PRIMARY PROCESS LINE
- SECONDARY PROCESS LINE
- TERTIARY PROCESS LINE
- EXISTING PROCESS LINE
- ELECTRICAL SIGNAL (PROPOSED)
- ELECTRICAL SIGNAL (EXISTING)
- VENDOR SUPPLIED CABLE
- CAPILLARY TUBING
- COPPER TUBING
- 120V POWER SUPPLY
- FIELD PANEL WIRING CONTINUATION
- FLOOR DRAIN
- PROCESS FLUME
- INSTRUMENT AIR COMPRESSOR
- STATIC MIXER
- PRESSURE SENSOR (FLANGE)
- DUPLEX GFR
- AIR RELIEF VALVE
- FLOW SWITCH

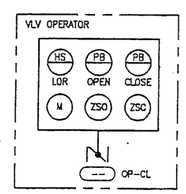

– MOTOR OPERATED BUTTERFLY VALVE

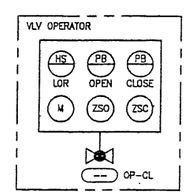

– MOTOR OPERATED BALL VALVE

ABBREVIATIONS

AI	ANALOG INPUT	LR	LOCAL OR REMOTE
AO	ANALOG OUTPUT	LOR	LOCAL OFF REMOTE
AM	AUTOMATIC OR MANUAL	MB	MOD BUS
CL	CHLORINE	MB+	MOD BUS PLUS
CP	CONTROL PANEL	MCC	MOTOR CONTROL CENTER
CTM	CURRENT TRIP MODULE	MCP	MAIN CONTROL PANEL
DI	DISCRETE INPUT	MOA	MANUAL OR OFF OR AUTOMATIC
DN	DEVICE NET	MOD	MODULATING
DO	DISCRETE OUTPUT	OC	OPEN OR CLOSE
EN	ETHERNET	OAC	OPEN AUTO CLOSE
ES	ELECTRICAL SUPPLY	OHC	OPEN OR HOLD OR CLOSE
ETM	ELAPSED TIME METER	PB	PUSH BUTTON
F	FLUORIDE	PCP	POSITION CONTROL PROCESSOR
FCLR	--	PLC	PROGRAMMABLE LOGIC CONTROLLER
FCV	FLOW CONTROL VLV, OPEN-CLOSE	RO	READ OUT, DIGITAL
FMV	FLOW MODULATING VALVE	SDI	SILT DENSITY INDEX
FP	FIELD PANEL	SI	SIGNAL ISOLATOR
HO	HAND OR OFF	S.P.	SAMPLE POINT
HOA	HAND OR OFF OR AUTOMATIC	TCLR	TOTAL CHLORINE
HOR	HAND OR OFF OR REMOTE	VFD	VARIABLE FREQUENCY DRIVE
LA	LOCAL OR AUTO	WS	WEATHER STATION
		YN	YES OR NO

DATE OF
NOV 05 2007
PRINT

DATE OF
OCT 06 2004
PRINT

CADD FILE:

NO.	DATE	BY	REVISION

C&W engineering
ELECTRICAL CONSULTANTS
2326 S. CONGRESS AVE., SUITE 1F
WEST PALM BEACH, FL. 33406
(561)642-5333, fax (561)966-2293
EMAIL: CWENG@BELLSOUTH.NET

REGISTRATION NUMBERS
C & W ENGINEERING EB0006245
DALE G. WALKER, ELECTRICAL PE 36914
CHARLES GERI, ELECTRICAL PE 17774

FLORIDA E.B. NO. 48 — FLORIDA L.B. NO. 48
MOCK·ROOS
ENGINEERS SURVEYORS PLANNERS
5720 Corporate Way, West Palm Beach, Florida 33407 (561) 683-3113, fax 478-7248

SEAL
DALE G. WALKER
FLORIDA P.E. NO. 36914
DATE

FIELD:
DRAWN: GH
DESIGN: DGW
APPR: DGW
SCALE: AS NOTED

I&C LEGEND SHEET
MASTER PUMP STATION REPLACEMENT
CONSTRUCTION DRAWINGS
PREPARED FOR
CITY OF LAKE WORTH UTILITIES
PALM BEACH COUNTY, FLORIDA

DATE: SEPTEMBER 2004
P.A. NO. 99076.07
DR. NO. 44-43-27-81
SHEET 11 OF 19

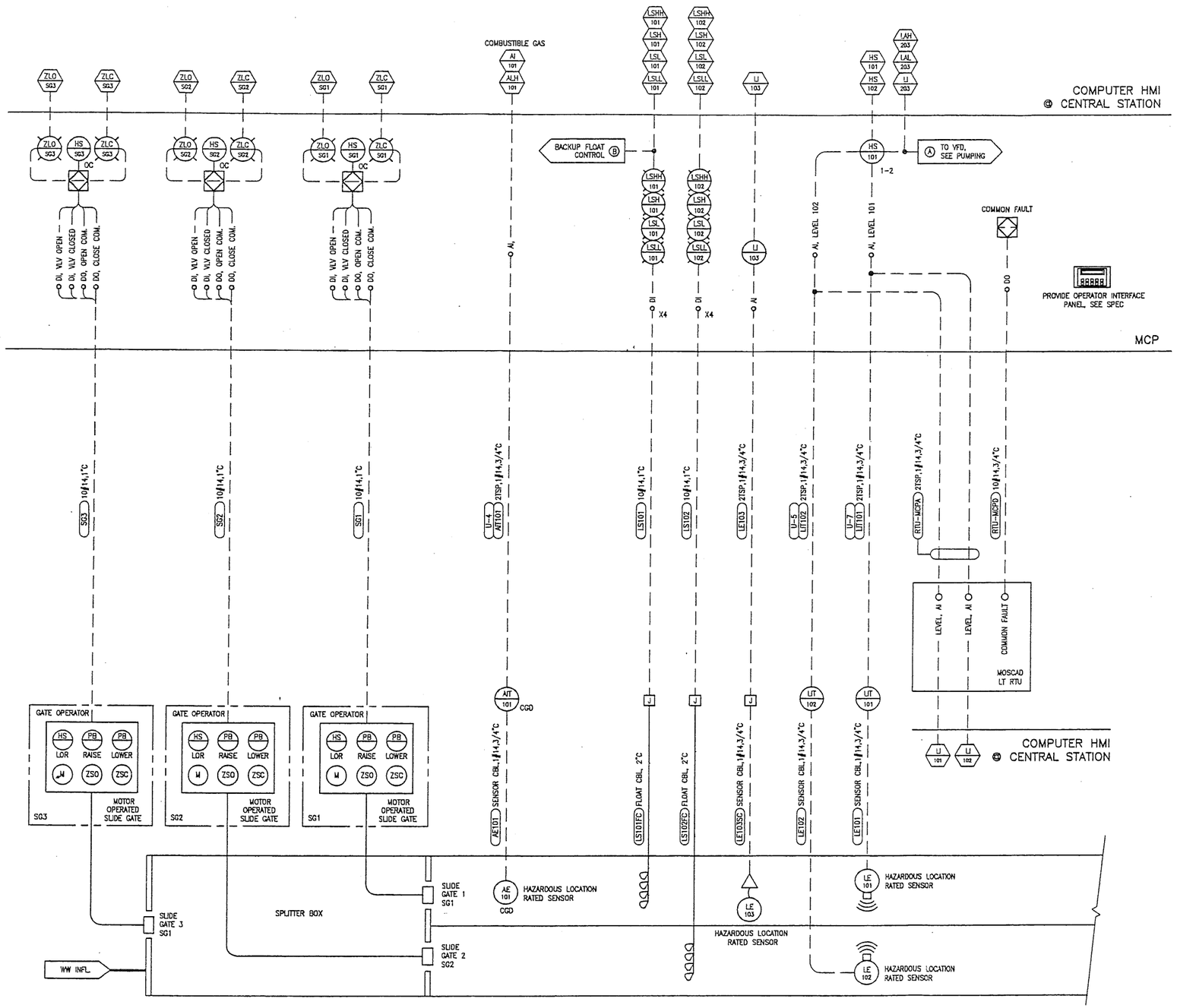

DATE OF
NOV 05 2007
PRINT

DATE OF
OCT 06 2004
PRINT

CADD FILE:	NO.	DATE	BY	REVISION	C&W engineering ELECTRICAL CONSULTANTS 2326 S. CONGRESS AVE., SUITE 1F WEST PALM BEACH, FL. 33406 (561)642-5333, fax (561)966-2293 EMAIL: CWENG@BELLSOUTH.NET	REGISTRATION NUMBERS C & W ENGINEERING EB0006245 DALE G. WALKER, ELECTRICAL PE 36914 CHARLES DERI, ELECTRICAL PE 17774	FLORIDA E.B. NO. 48 FLORIDA L.B. NO. 48 MOCK ROOS ENGINEERS • SURVEYORS • PLANNERS 5720 Corporate Way, West Palm Beach, Florida 33407 (561) 683-3113, fax 478-7248	SEAL DALE G. WALKER FLORIDA P.E. NO. 36914 DATE	FIELD: DRAWN: GH DESIGN: DGW APPR: DGW SCALE: AS NOTED	I&C WETWELL MASTER PUMP STATION REPLACEMENT CONSTRUCTION DRAWINGS PREPARED FOR CITY OF LAKE WORTH UTILITIES PALM BEACH COUNTY, FLORIDA	DATE: SEPTEMBER 2004 P.A. NO. 99076.07 DR. NO. 44-43-27-81 SHEET 12 OF 19

INSTRUMENT NUMBERING LEGEND

FIRST DIGIT (X) AREA PROCESS NUMBER	SECOND DIGIT (Y) LOOP NUMBER	THIRD DIGIT (Z)	THIRD DIGIT SUFFIX
1 – WASTE WATER PUMPING	SYSTEMATIC SEQUENTIAL NUMBERING OF FUNCTION STEPS THRU UNIT PROCESS	1 – UNIT 1 2 – UNIT 2 3 – UNIT 3 4 – UNIT 4 5 – UNIT 5 6 – UNIT 6 7 – UNIT 7 8 – UNIT 8 9 – UNIT 9	ADDITIONAL SEQUENTIAL NUMBERING FOR CONVENIENCE (AS APPLICABLE)
2 – ODOR CONTROL			
3 – NOT USED			
4 – NOT USED			
5 – NOT USED			
6 – NOT USED			
7 – NOT USED			
8 – NOT USED			
9 – NOT USED			
0 – NOT USED			

AE XYZ XX

FUNCTIONAL INDENTIFICATION PER ISA STANDARD S5.1

XX – ANALYZER
CLR – CHLORINE RESIDUAL
COND – CONDUCTIVITY
DO – DISSOLVED OXYGEN
TURB. – TURBIDITY
pH – pH
TSS – TOTAL SUSPENDED SOLIDS

MEANINGS OF IDENTIFICATION LETTERS

	FIRST LETTER		SUCCEEDING LETTERS		
	MEASURED OR INITIATING VARIABLE	MODIFIER	READOUT OR PASSIVE FUNCTION	OUTPUT FUNCTION	MODIFIER
A	ANALYSIS		ALARM		
B	USERS' CHOICE		USER'S CHOICE	USER'S CHOICE	USER'S CHOICE
C	CONDUCTIVITY (ELECTRICAL)			CONTROL	
D	DENSITY (MASS) OR SPECIFIC GRAVITY	DIFFERENTIAL			
E	VOLTAGE (EMF)		PRIMARY ELEMENT		
F	FLOW RATE	RATIO (FRACTION)			
G	GAUGING (DIMENSIONAL)		GLASS		
H	HAND (MANUALLY INITIATED)		AUDIBLE HORN		HIGH
I	CURRENT (ELECTRICAL)		INDICATE		
J	POWER	SCAN			
K	TIME OR TIME SCHEDULE			CONTROL STATION	
L	LEVEL		LIGHT (PILOT)		LOW
M	MOISTURE OR HUMIDITY				MIDDLE OR INTERMEDIATE
N	AMPLITUDE		USER'S CHOICE	USER'S CHOICE	USER'S CHOICE
O	USER'S CHOICE		ORIFICE (RESTORATION)		
P	PRESSURE OR VACUUM		POINT (TEST CONN.)		
Q	QUANTITY OR EVENT	INTEGRATE OR TOTALIZE			
R	RUN		RELAY		
S	SPEED OR FREQUENCY	SAFETY		SWITCH	
T	TEMPERATURE			TRANSMIT	
U	MULTIVARIABLE		MULTIFUNCTION	MULTIFUNCTION	MULTIFUNCTION
V	VISCOSITY			VALVE, DAMPER OR LOUVER	
W	WEIGHT OR FORCE		WELL		
X	FAILURE				
Y	USER'S CHOICE			RELAY OR COMPUTE	
Z	POSITION			DRIVE, ACTUATE OR UNCLASSIFIED FINAL CONTROL ELEMENT	

PROCESS & INSTRUMENTATION LEGEND

- STATUS LIGHT, PANEL MOUNTED
- AUDIBLE HORN
- PANEL MOUNTED DEVICE
- SUB PANEL MOUNTED DEVICE
- FIELD MOUNTED DEVICE
- COMPUTER FUNCTION
- PLC FUNCTION
- NEW PANEL MOUNTED INTERLOCK (HARDWIRED)
- CONTINUATION
- WIRING CONTINUATION
- HOSE CONNECTION
- ANNUNCIATOR WINDOW/POINT
- SOLENOID VALVE
- FLUSHING CONNECTION
- SAMPLE POINT
- CONTROL SIGNAL RELAY
- MANUAL BUTTERFLY VALVE
- MANUAL GATE VALVE
- MANUAL BALL VALVE
- SWING ARM CHECK VALVE
- ROTAMETER
- FLOW ELEMENT (VENTURI)
- FLOW ELEMENT (ORIFICE PLATE)
- FLOW RESTRICTER
- LEVEL (BUBBLE TUBE)
- LEVEL (FLOAT)
- CHEMICAL METER PUMP
- FLOW METER (MAGNETIC)
- PLC INPUT/OUTPUT POINT
- DIAPHRAM
- PRIMARY PROCESS LINE
- SECONDARY PROCESS LINE
- TERTIARY PROCESS LINE
- EXISTING PROCESS LINE
- ELECTRICAL SIGNAL (PROPOSED)
- ELECTRICAL SIGNAL (EXISTING)
- VENDOR SUPPLIED CABLE
- CAPILLARY TUBING
- COPPER TUBING
- 120V POWER SUPPLY
- FIELD PANEL WIRING CONTINUATION
- FLOOR DRAIN
- PROCESS FLUME
- INSTRUMENT AIR COMPRESSOR
- STATIC MIXER
- PRESSURE SENSOR (FLANGE)
- DUPLEX GFR
- AIR RELIEF VALVE
- FLOW SWITCH

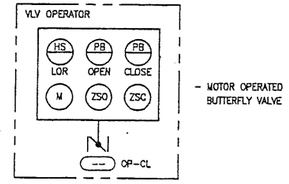

– MOTOR OPERATED BUTTERFLY VALVE

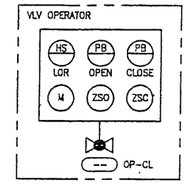

– MOTOR OPERATED BALL VALVE

ABBREVIATIONS

AI	ANALOG INPUT	LR	LOCAL OR REMOTE
AO	ANALOG OUTPUT	LOR	LOCAL OFF REMOTE
AM	AUTOMATIC OR MANUAL	MB	MOD BUS
CL	CHLORINE	MB+	MOD BUS PLUS
CP	CONTROL PANEL	MCC	MOTOR CONTROL CENTER
CTM	CURRENT TRIP MODULE	MCP	MAIN CONTROL PANEL
DI	DISCRETE INPUT	MOA	MANUAL OR OFF OR AUTOMATIC
DN	DEVICE NET	MOD	MODULATING
DO	DISCRETE OUTPUT	OC	OPEN OR CLOSE
EN	ETHERNET	OAC	OPEN AUTO CLOSE
ES	ELECTRICAL SUPPLY	OHC	OPEN OR HOLD OR CLOSE
ETM	ELAPSED TIME METER	PB	PUSH BUTTON
F	FLUORIDE	PCP	POSITION CONTROL PROCESSOR
FCLR	---	PLC	PROGRAMMABLE LOGIC CONTROLLER
FCV	FLOW CONTROL VLV, OPEN–CLOSE	RO	READ OUT, DIGITAL
FMV	FLOW MODULATING VALVE	SDI	SILT DENSITY INDEX
FP	FIELD PANEL	SI	SIGNAL ISOLATOR
HO	HAND OR OFF	S.P.	SAMPLE POINT
HOA	HAND OR OFF OR AUTOMATIC	TCLR	TOTAL CHLORINE
HOR	HAND OR OFF OR REMOTE	VFD	VARIABLE FREQUENCY DRIVE
LA	LOCAL OR AUTO	WS	WEATHER STATION
		YN	YES OR NO

DATE OF
OCT 0 6 2004
PRINT

DATE OF
NOV 0 5 2007
PRINT

CADD FILE:

NO.	DATE	BY	REVISION

C&W engineering
ELECTRICAL CONSULTANTS
2326 S. CONGRESS AVE., SUITE 1F
WEST PALM BEACH, FL. 33406
(561)642-3333, fax (561)966-2293
EMAIL: CWENG@BELLSOUTH.NET

REGISTRATION NUMBERS
C & W ENGINEERING EB0006245
DALE G. WALKER, ELECTRICAL PE 36914
CHARLES DERI, ELECTRICAL PE 17774

FLORIDA E.B. NO. 48 FLORIDA L.B. NO. 48
MOCK ROOS
ENGINEERS SURVEYORS PLANNERS
5720 Corporate Way, West Palm Beach, Florida 33407 (561) 683-3113, fax 478-7248

SEAL
DALE G. WALKER
FLORIDA P.E. NO. 36914
DATE

FIELD:
DRAWN: GH
DESIGN: DGW
APPR: DGW
SCALE: AS NOTED

I&C LEGEND SHEET
MASTER PUMP STATION
REPLACEMENT
CONSTRUCTION DRAWINGS
PREPARED FOR
CITY OF LAKE WORTH UTILITIES
PALM BEACH COUNTY, FLORIDA

DATE: SEPTEMBER 2004
P.A. NO. 99076.07
DR. NO. 44-43-27-81
SHEET 11 OF 19

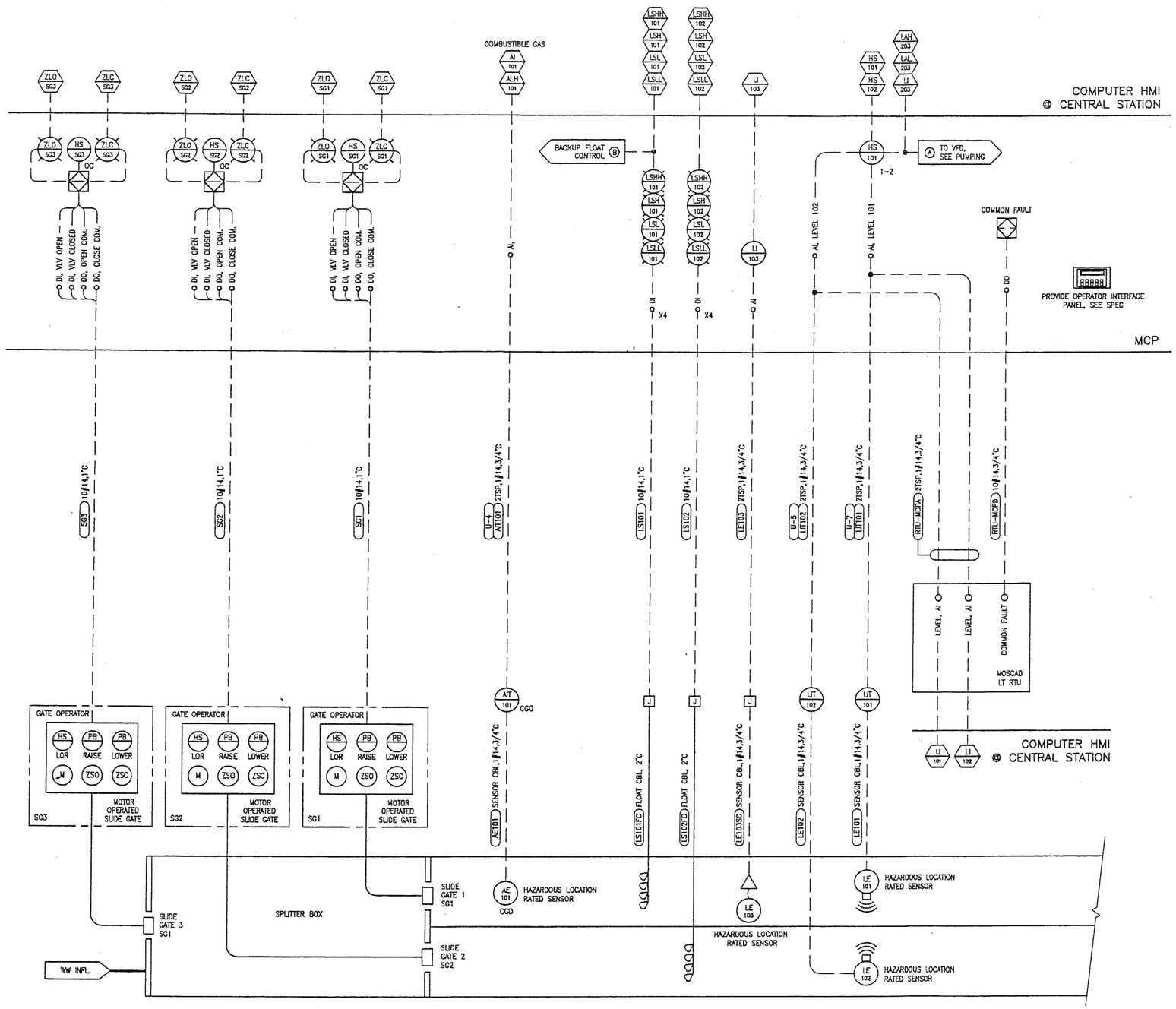

DATE OF
OCT 0 6 2004
PRINT

DATE OF
NOV 0 5 2007
PRINT

CADD FILE:

NO.	DATE	BY	REVISION

C&W engineering
ELECTRICAL CONSULTANTS
2326 S. CONGRESS AVE., SUITE 1F
WEST PALM BEACH, FL. 33406
(561)642-5333, fax (561)966-2293
EMAIL: CWENG@BELLSOUTH.NET

REGISTRATION NUMBERS
C & W ENGINEERING EB0006245
DALE G. WALKER, ELECTRICAL PE 36914
CHARLES DERI, ELECTRICAL PE 17774

65111

FLORIDA E.B. NO. 48 FLORIDA L.B. NO. 48
MOCK ROOS
ENGINEERS ARCHITECTS PLANNERS
5720 Corporate Way, West Palm Beach, Florida 33407 (561) 683-3113, fax 478-7248

SEAL
DALE G. WALKER
FLORIDA P.E. NO. 36914
DATE

FIELD:
DRAWN: GH
DESIGN: DGW
APPR: DGW
SCALE: AS NOTED

I&C WETWELL
MASTER PUMP STATION
REPLACEMENT
CONSTRUCTION DRAWINGS
PREPARED FOR
CITY OF LAKE WORTH UTILITIES
PALM BEACH COUNTY, FLORIDA

DATE: SEPTEMBER 2004
P.A. NO. 99076.07
DR. NO. 44-43-27-81
SHEET 12 OF 19

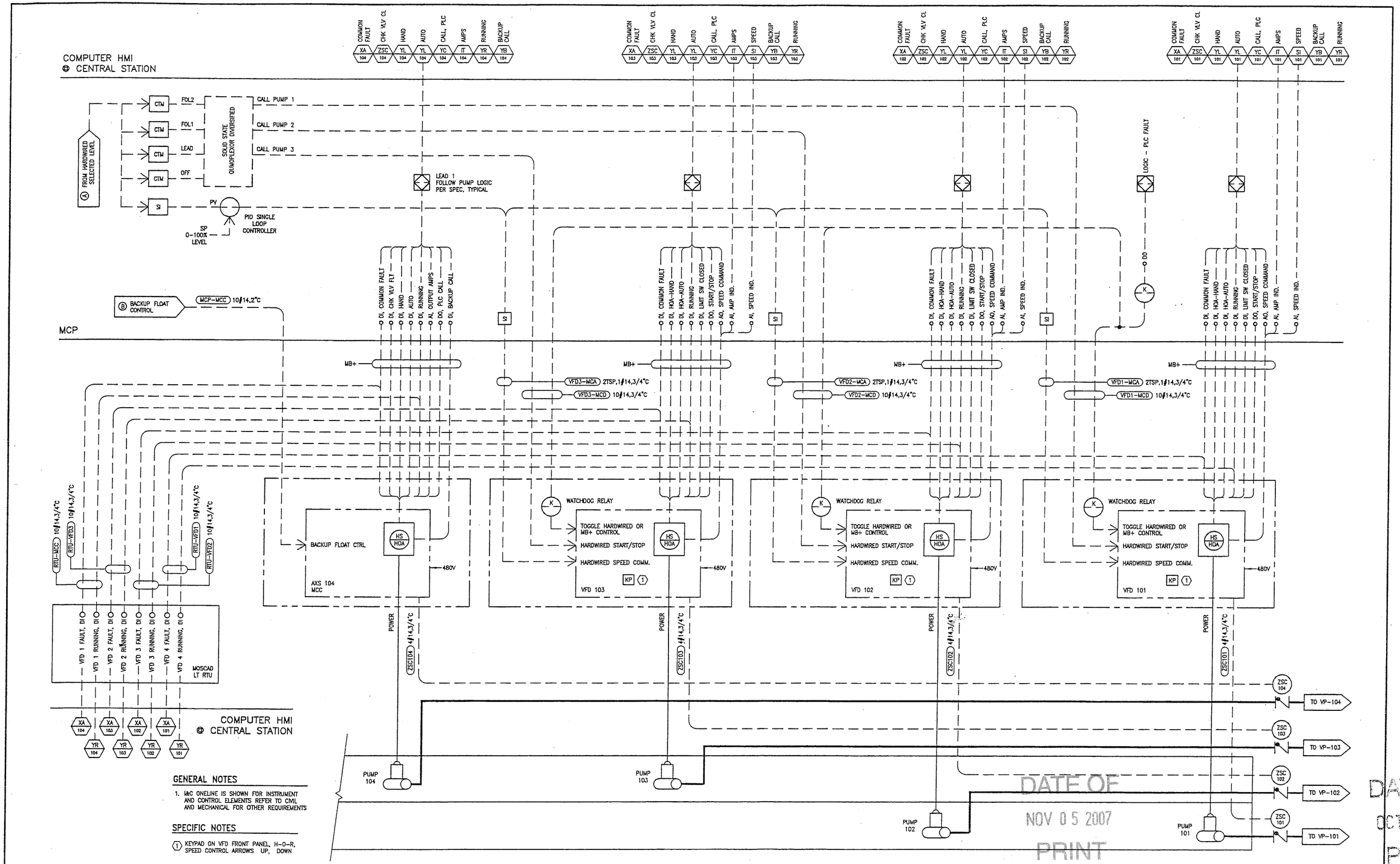

GENERAL NOTES

1. I&C ONELINE IS SHOWN FOR INSTRUMENT AND CONTROL ELEMENTS REFER TO CML AND MECHANICAL FOR OTHER REQUIREMENTS

SPECIFIC NOTES

(1) KEYPAD ON VFD FRONT PANEL, H-O-R, SPEED CONTROL ARROWS UP, DOWN

DATE OF NOV 05 2007 PRINT

DATE OF OCT 06 2004 PRINT

NO.	DATE	BY	REVISION

CADD FILE:

C&W engineering
ELECTRICAL CONSULTANTS
2326 S. CONGRESS AVE., SUITE 1F
WEST PALM BEACH, FL. 33406
(561)642-5333, fax (561)986-2293
EMAIL: CWENG@BELLSOUTH.NET

REGISTRATION NUMBERS
C & W ENGINEERING EB0006245
DALE C. WALKER, ELECTRICAL PE 36914
CHARLES DERI, ELECTRICAL PE 17774

68111

FLORIDA E.B. NO. 48 FLORIDA L.B. NO. 48
MOCK ROOS
ENGINEERS ARCHITECTS PLANNERS
5720 Corporate Way, West Palm Beach, Florida 33407 (561) 683-3113, fax 478-7248

SEAL
DALE C. WALKER
FLORIDA P.E. NO. 36914
DATE

FIELD:
DRAWN: GH
DESIGN: DGW
APPR: DGW
SCALE: AS NOTED

I&C PUMPING
MASTER PUMP STATION
REPLACEMENT
CONSTRUCTION DRAWINGS
PREPARED FOR
CITY OF LAKE WORTH UTILITIES
PALM BEACH COUNTY, FLORIDA

DATE: SEPTEMBER 2004
P.A. NO. 99076.07
DR. NO. 44-43-27-81
SHEET 13 OF 19

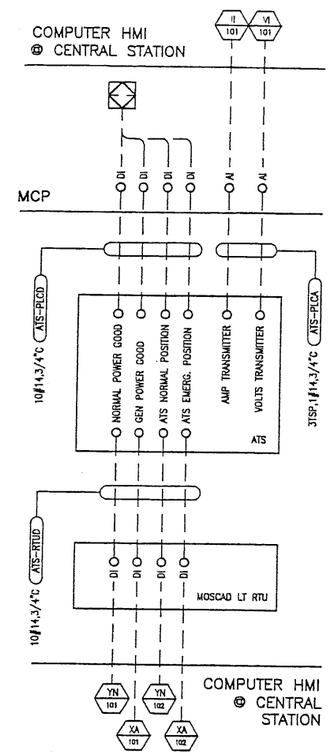

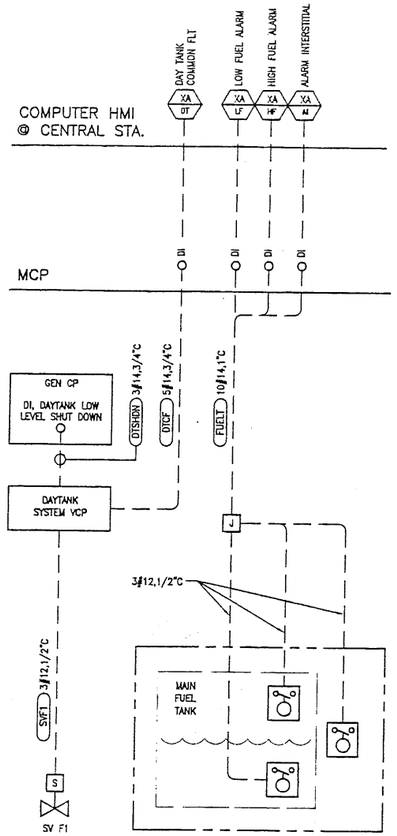

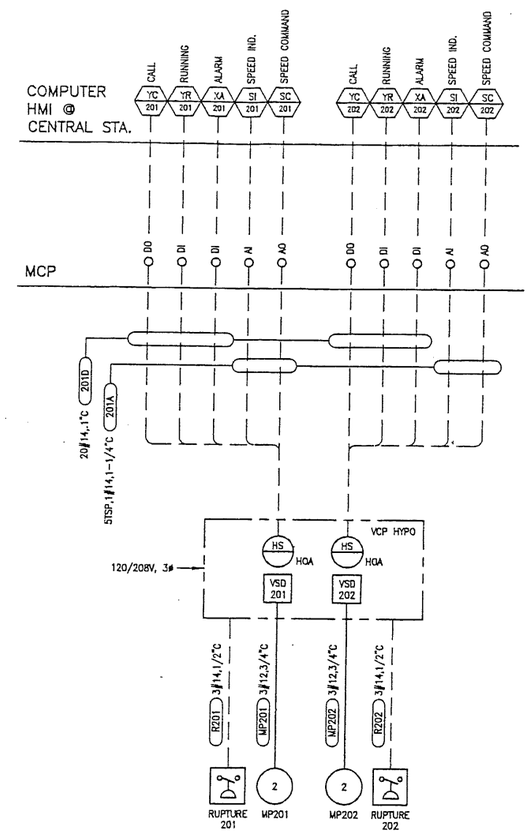

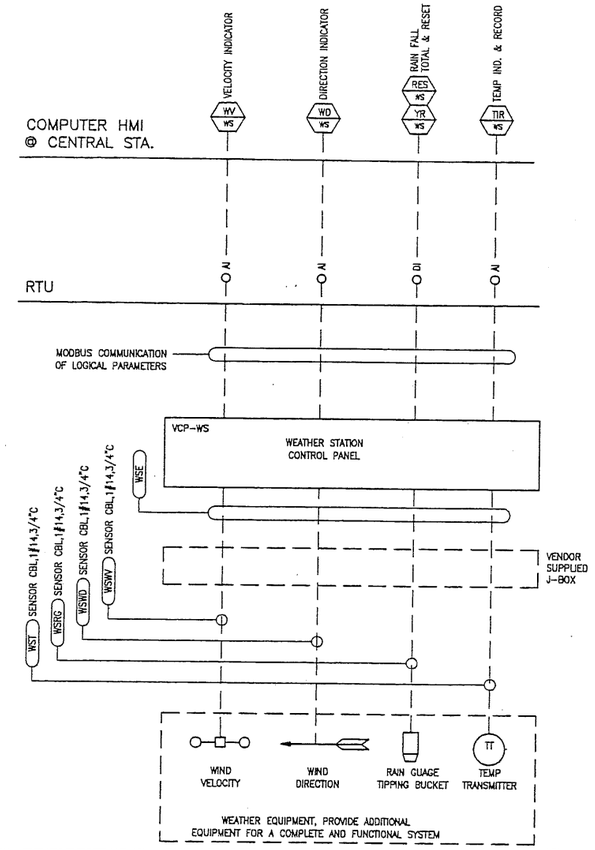

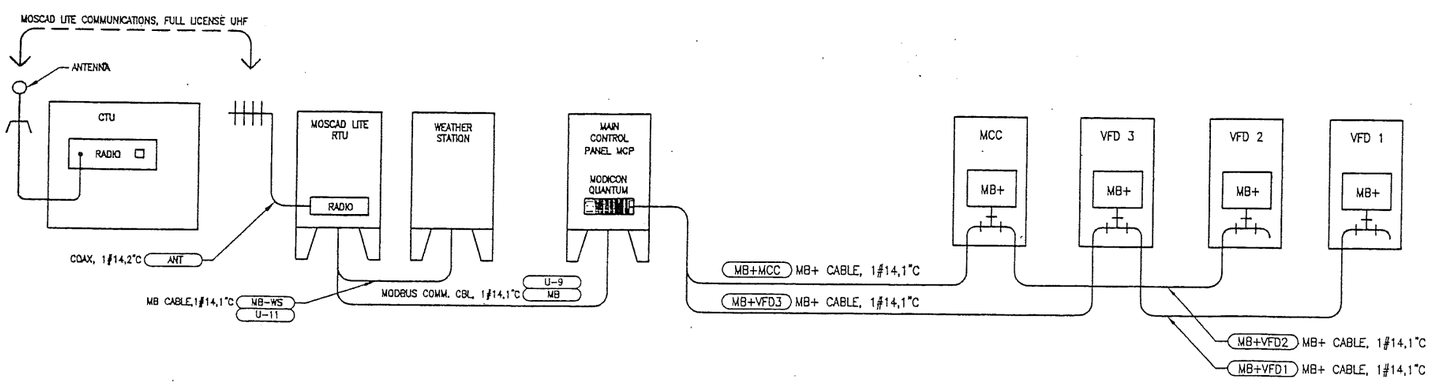

DATE OF
NOV 05 2007
PRINT

DATE OF
OCT 06 2004
PRINT

CADD FILE:

NO.	DATE	BY	REVISION

C&W engineering
ELECTRICAL CONSULTANTS
2325 S. CONGRESS AVE., SUITE 1F
WEST PALM BEACH, FL 33406
(561)642-5333, fax (561)966-2293
EMAIL: CWENG@BELLSOUTH.NET

REGISTRATION NUMBERS
C & W ENGINEERING EB0006245
DALE G. WALKER, ELECTRICAL PE 36914
CHARLES DERI, ELECTRICAL PE 17774

68111

FLORIDA E.B. NO. 48 FLORIDA L.B. NO. 48
MOCK ROOS
ENGINEERS SURVEYORS PLANNERS
5720 Corporate Way, West Palm Beach, Florida 33407 (561) 683-3113, fax 478-7248

SEAL
DALE G. WALKER
FLORIDA P.E. NO. 36914
DATE

FIELD:
DRAWN: CH
DESIGN: DGW
APPR: DGW
SCALE: AS NOTED

I&C SYSTEM DIAGRAM
MASTER PUMP STATION
REPLACEMENT
CONSTRUCTION DRAWINGS
PREPARED FOR
CITY OF LAKE WORTH UTILITIES
PALM BEACH COUNTY, FLORIDA

DATE: SEPTEMBER 2004
P.A. NO. 99076.07
DR. NO. 44-43-27-81
SHEET 17 OF 19

LOADCENTER SCHEDULE U

WIRE SIZE	COND SIZE	BUS AMPS A	BUS AMPS B	BUS AMPS C	LOAD	POLES	AMPS	BUS A B C		AMPS	POLES	LOAD	BUS AMPS A	BUS AMPS B	BUS AMPS C	WIRE SIZE	COND SIZE
3#12	1/2	2			MCP	1	20	1	2	20	1	SPARE					
3#12	1/2		2		LIT101	1	20	3	4	20	1	CGD101		2		3#12	1/2
3#12	1/2			2	LIT102	1	20	5	6								
3#12	1/2	2			FIT101	1	20	7	8	20	1	SPARE					
3#12	1/2		2		RTU	1	20	9	10	20	1	SPARE					
3#12	1/2			2	WEATHER STATION	1	20	11	12	20	1	SPARE					

RATED VOLTAGE: ■120/208 □277/480 3ø, 4 WIRE	BRANCH POLES: ■12 □20 □30 □42	APP. MF'RS. CUTLER HAMMER, SIEMENS, SQD GE ONLY
RATED AMPS: □100 □225 □400 ■60	CABINET: ■ SURFACE □ FLUSH	NEMA ■1 □3R □4X
□ MAIN LUGS ONLY MAIN 60 AMPS ■ BREAKER	■ HINGED DOOR	■ KEYED DOOR LATCH
□ FUSED ■ CIRCUIT BREAKER BRANCH DEVICES	□ _____ TO BE GFI BREAKERS	FULL NEUTRAL BUS / GROUND BUS
ALL BREAKERS MUST BE RATED TO INTERRUPT A SHORT CIRCUIT ISC OF 10,000 AMPS SYMMETRICAL.		

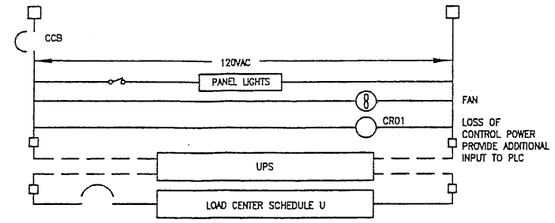

CONTROL POWER WIRING DIAGRAM

NTS

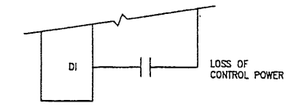

ADDITIONAL DISCRETE SIGNALS

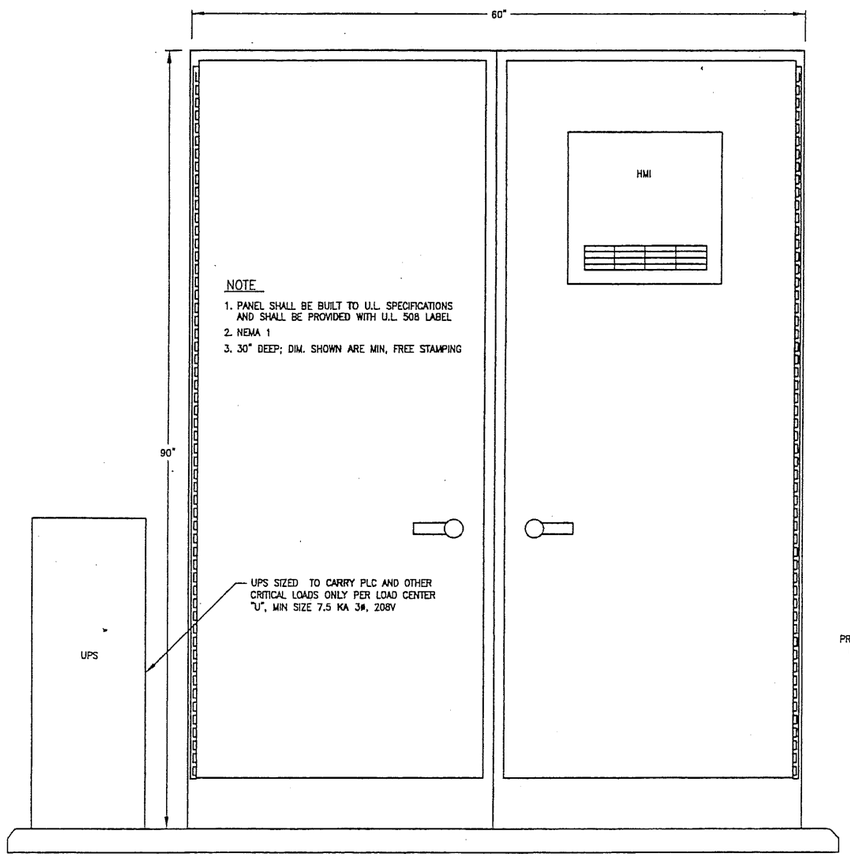

FRONT VIEW

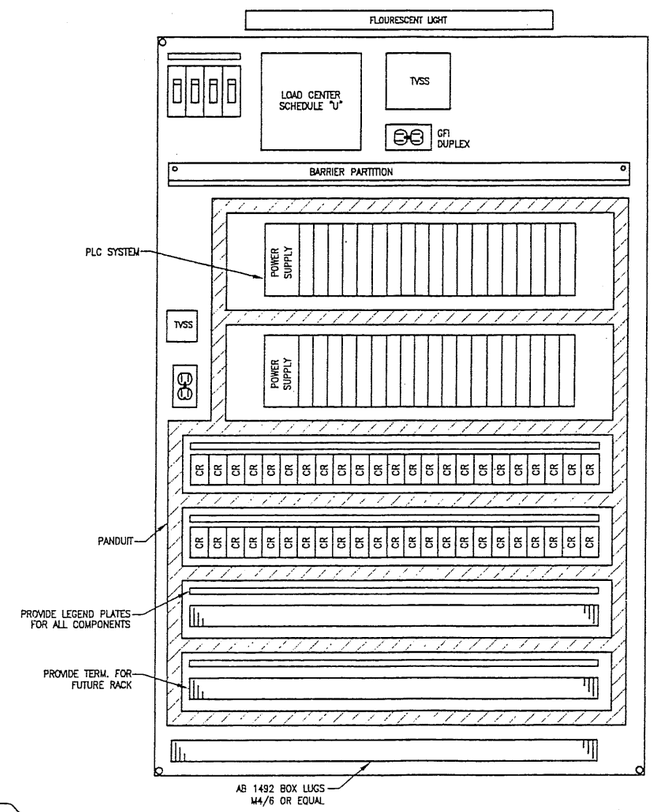

SUBPLATE LAYOUT

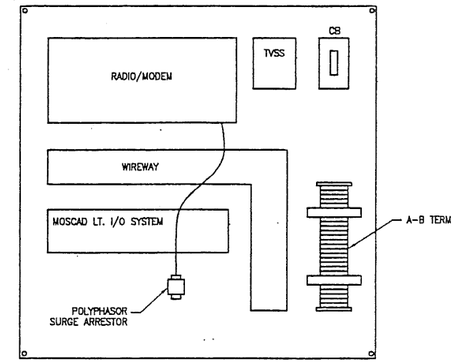

SUBPLATE VIEW

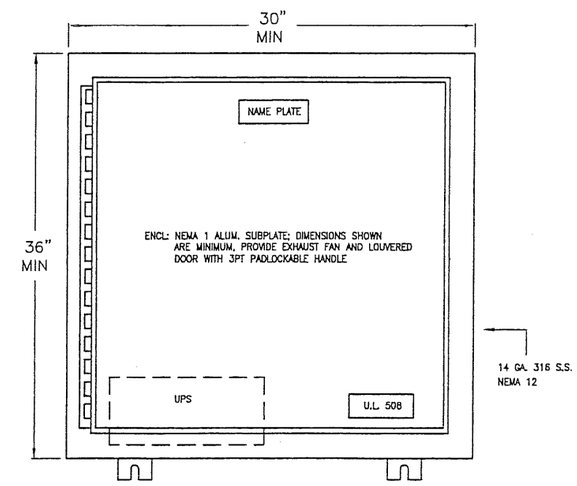

FRONT VIEW

PLC CONTROL PANEL

NTS

RTU PANEL DETAIL

NTS

DATE OF
NOV 05 2007
PRINT

DATE O
OCT 06 2004
PRINT

I&C MCP & RTU DETAILS

NO.	DATE	BY	REVISION

CADD FILE:

C&W engineering
ELECTRICAL CONSULTANTS
2326 S. CONGRESS AVE., SUITE 1F
WEST PALM BEACH, FL. 33406
(561)642-5333, fax (561)966-2293
EMAIL: CWENG@BELLSOUTH.NET

REGISTRATION NUMBERS
C & W ENGINEERING EB0006245
DALE G. WALKER, ELECTRICAL PE 36914
CHARLES DERI, ELECTRICAL PE 17774

68111

FLORIDA E.B. NO. 48 FLORIDA L.B. NO. 48
MOCK·ROOS
ENGINEERS SURVEYORS PLANNERS
5720 Corporate Way, West Palm Beach, Florida 33407 (561) 683-3113, fax 478-7248

SEAL
DALE G. WALKER
FLORIDA P.E. NO. 36914
DATE

FIELD:
DRAWN: GH
DESIGN: DGW
APPR: DGW
SCALE: AS NOTED

MASTER PUMP STATION
REPLACEMENT
CONSTRUCTION DRAWINGS
PREPARED FOR
CITY OF LAKE WORTH UTILITIES
PALM BEACH COUNTY, FLORIDA

DATE: SEPTEMBER 2004
P.A. NO. 99076.07
DR. NO. 44-43-27-81
SHEET 18 OF 19

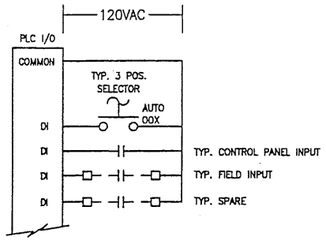

TYPICAL DI DIAGRAMS

NTS

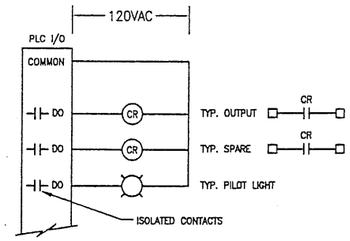

TYPICAL DO DIAGRAMS

NTS

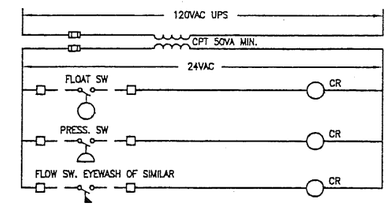

TYPICAL LOW VOLTAGE REQUIREMENTS

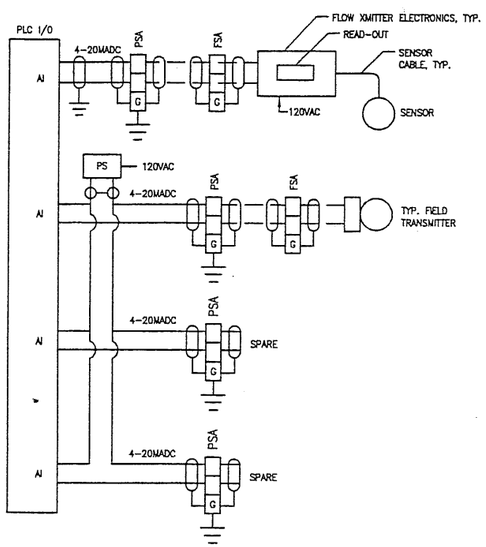

TYPICAL AI LOOP DIAGRAMS

NTS

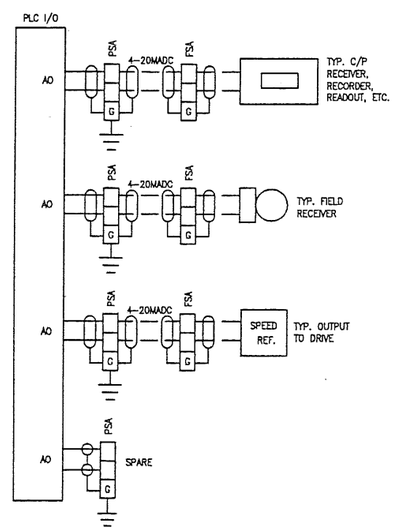

TYPICAL AO LOOP DIAGRAMS

NTS

GENERAL NOTES

1. TYPICAL PLC I/O LOOP DRAWINGS INDICATE MIN REQUIREMENTS
2. REFER TO OTHER PLANS FOR ADDITIONAL REQUIREMENTS

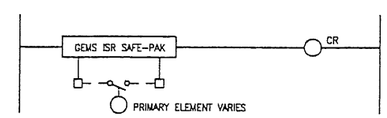

TYPICAL LOW VOLTAGE REQUIREMENTS

DATE OF
NOV 05 2007
PRINT

DATE OF
OCT 06 2004
PRINT

CADD FILE:

NO.	DATE	BY	REVISION

C&W engineering
ELECTRICAL CONSULTANTS
2326 S. CONGRESS AVE., SUITE 1F
WEST PALM BEACH, FL. 33406
(561)642-5333, fax (561)966-2293
EMAIL: CWENG@BELLSOUTH.NET

REGISTRATION NUMBERS
C & W ENGINEERING EB0006245
DALE G. WALKER, ELECTRICAL PE 36914
CHARLES DERI, ELECTRICAL PE 17774

68111

FLORIDA E.B. NO. 48 FLORIDA L.B. NO. 48

MOCK ROOS
ENGINEERS ARCHITECTS PLANNERS
5720 Corporate Way, West Palm Beach, Florida 33407 (561) 683-3113, fax 478-7248

SEAL
DALE G. WALKER
FLORIDA P.E. NO. 36914
DATE

FIELD:
DRAWN: GH
DESIGN: DGW
APPR: DGW
SCALE: AS NOTED

I&C WIRING DIAGRAMS
MASTER PUMP STATION
REPLACEMENT
CONSTRUCTION DRAWINGS
PREPARED FOR
CITY OF LAKE WORTH UTILITIES
PALM BEACH COUNTY, FLORIDA

DATE: SEPTEMBER 2004
P.A. NO. 99076.07
DR. NO. 44-43-27-81
SHEET 19 OF 19