CITY OF LAKE WORTH
N. BOOSTER PUMP STATION AND ELEVATED TANK PIPING MODIFICATION
PALM BEACH COUNTY, FLORIDA

BID No. IFB 16-104
FINANCE PROJECT No. WT1602

LOCATION MAP
N.T.S

NORTH

DRAWING INDEX

SHEET NUMBER	SHEET TITLE
C0-1	COVER SHEET AND LOCATION PLAN
C0-2	GENERAL NOTES
C0-3	SURVEY
C1-1	ELEVATED TANK PIPING MODIFICATION PLAN
C1-2	N. BOOSTER PUMP STATION MODIFICATION PLAN
C1-3	PIPING DETAILS 1 OF 2
C1-4	PIPING DETAILS 2 OF 2
C1-5	VAULT DETAILS
C1-6	WATER DISTRIBUTION DETAILS

CITY COMMISSION
PAM TRIOLO, MAYOR
SCOTT MAXWELL, VICE MAYOR
CHRISTOPHER MCVOY
ANDY AMOROSO
RYAN MAIER

CITY MANAGER
MICHAEL BORNSTEIN

BID SET

URS
7800 CONGRESS AVENUE, SUITE 200
BOCA RATON, FLORIDA 33487 -1350
PHONE: (561) 994-6500
FAX: (561) 994-6524
CERT. OF AUTHORIZATION NO. 0002

DATE:_____

ENGINEER OF RECORD:
ANA C. DEMELO, P.E.
FL. REG. NUMBER: 57420

#	Date	Revision Description

CITY OF LAKE WORTH
N. BOOSTER PUMP STATION AND
ELEVATED TANK PIPING MODIFICATION
PALM BEACH COUNTY, FLORIDA

COVER SHEET AND LOCATION PLAN	
DWN: CDS	DSN: HDB
CHK: FN	SCALE: AS SHOWN
APV: ACD	DATE: 1/20/16

SHEET
C0-1

Z:\60440020 – CLW N. BOOSTER PUMP & ELEV. TANK\BID SET REVISED\CAD\ C0-1.dwg Feb 26, 2016 – 2:00pm

I. CITY OF LAKE WORTH PUBLIC SERVICES DEPARTMENT - GENERAL NOTES

A. SAFETY. THE CONTRACTOR SHALL BE RESPONSIBLE FOR COMPLYING WITH THE PROVISIONS OF THE FLORIDA TRENCH SAFETY ACT, THE FLORIDA UNDERGROUND FACILITY DAMAGE PREVENTION AND SAFETY ACT, AND ALL APPLICABLE O.S.H.A. REQUIREMENTS. THE CONTRACTOR SHALL BE RESPONSIBLE FOR TAKING ALL NECESSARY PRECAUTIONS WHEN WORKING IN THE VICINITY OF OVERHEAD ELECTRIC LINES.

B. ACCESS. THE CONTRACTOR SHALL BE RESPONSIBLE FOR MAINTAINING SAFE VEHICULAR AND PEDESTRIAN ACCESS AT ALL TIMES.

C. WARRANTY. ALL WORK, MATERIALS, OR EQUIPMENT SHALL BE WARRANTIED FOR A MINIMUM OF ONE YEAR, FROM THE DATE OF FINAL ACCEPTANCE BY THE CITY OF LAKE WORTH, AGAINST DEFECTIVE MATERIALS AND/OR WORKMANSHIP. ALL WORK FOUND TO BE DEFECTIVE WILL BE REPLACED BY THE CONTRACTOR AT NO EXPENSE TO THE CITY OF LAKE WORTH.

D. FIELD REVIEWS. THE CONTRACTOR SHALL PROVIDE NOTIFICATION, 48 HOURS (MIN.), PRIOR TO ANY REQUIRED FIELD REVIEWS OR INSPECTIONS AND SHALL SUPPLY ALL NECESSARY EQUIPMENT, LABOR, AND MATERIALS FOR INSPECTION AND/OR TEST. ALL WORK SHALL BE OPEN AND SUBJECT TO REVIEW AND/OR INSPECTION BY AUTHORIZED PERSONNEL OF THE CITY OF LAKE WORTH AND THE ENGINEER OF RECORD.

E. DENSITY TESTING. THE CONTRACTOR SHALL BE RESPONSIBLE FOR OBTAINING ALL NECESSARY TESTING TO ENSURE THAT THE PROPER COMPACTION HAS BEEN ACHIEVED FOR ALL SUBGRADE, BASE MATERIAL, PIPE BASE MATERIAL, BACKFILL, & ALL OTHER AREAS WHERE COMPACTION REQUIREMENTS ARE SPECIFIED. ALL TEST RESULTS SHALL BE SIGNED & SEALED BY A FLORIDA LICENSED PROFESSIONAL ENGINEER AND COPIES SHALL BE PROVIDED TO THE ENGINEER OF RECORD AND THE CITY OF LAKE WORTH.

F. PERMITS. THE CONTRACTOR SHALL NOT COMMENCE CONSTRUCTION PRIOR TO RECEIPT OF ALL APPLICABLE PERMITS AND APPROVALS INCLUDING AN APPROVED MAINTENANCE OF TRAFFIC PLAN. THE CONTRACTOR SHALL ABIDE BY ALL APPLICABLE REQUIREMENTS OF THE PERMITS AND AGENCY APPROVALS.

G. EROSION CONTROL. ALL EROSION CONTROL MEASURES SHALL BE INSTALLED IN ACCORDANCE WITH FDOT INDICES 102, 103 AND 106, THE FDEP NATIONAL POLLUTANT DISCHARGE ELIMINATION SYSTEM (NPDES) GENERAL PERMIT (IF APPLICABLE), AND THE STORMWATER POLLUTION PREVENTION PLAN (SWPPP). FILTER FABRIC, HAY BALES, OR ROCK BAGS SHALL BE INSTALLED IN EACH INLET THROUGHOUT THE CONSTRUCTION PERIOD. A SOIL TRACKING PREVENTION DEVICE (STPD) SHALL BE CONSTRUCTED AT ALL UNSTABILIZED CONSTRUCTION ACCESS POINTS, PER FDOT INDEX NO. 106.

H. DEWATERING. THE CONTRACTOR SHALL BE RESPONSIBLE FOR OBTAINING AND COMPLYING WITH ANY DEWATERING PERMITS AND/OR APPROVALS NECESSARY FOR CONSTRUCTION. NO WATER FROM DEWATERING MEASURES SHALL BE DISCHARGED OFF-SITE. ALL DISCHARGE SHALL BE CONTAINED IN ON-SITE SEDIMENT BASINS.

I. THE CITY OF LAKE WORTH WILL PROVIDE THE CONTRACTOR WITH THE HEALTH DEPARTMENT PERMIT. THE CONTRACTOR IS RESPONSIBLE FOR OBTAINING ANY ADDITIONAL PERMITS REQUIRED FOR THE CONSTRUCTION OF THIS PROJECT.

J. NO CONNECTIONS FOR THE PURPOSE OF OBTAINING WATER SUPPLY DURING CONSTRUCTION SHALL BE MADE TO ANY FIRE HYDRANT OR BLOW OFF STRUCTURE WITHOUT FIRST OBTAINING PERMISSION AND A TEMPORARY CONSTRUCTION METER FROM THE CITY OF LAKE WORTH CUSTOMER SERVICE.

K. WATER DISTRIBUTION SYSTEM. THE CONTRACTOR SHALL LOCATE ISOLATION VALVES PRIOR TO SCHEDULING WORK IN AFFECTED WATER MAINS. APPENDIX A IN THE PROJECT MANUAL PROVIDES A SCHEMATIC DRAWING OF THE CITY OF LAKE WORTH WATER DISTRIBUTION SYSTEM TO ASSIST THE CONTRACTOR IN IDENTIFYING APPLICABLE ISOLATION VALVES.

II. LOCATION OF UTILITIES

A. UNDERGROUND UTILITIES SHOWN IN THESE PLANS ARE BASED ON THE BEST AVAILABLE INFORMATION PROVIDED TO THE ENGINEER. CONTRACTOR SHALL CALL 811, 48 HOURS BEFORE DIGGING OR TRENCHING OPERATIONS BEGIN.

B. THE CONTRACTOR SHALL ACCURATELY LOCATE AND UNCOVER ALL EXISTING UTILITIES BEFORE CONSTRUCTION.

C. ANY DAMAGE RESULTING FROM THE CONTRACTORS OPERATIONS SHALL BE REPAIRED AT THE CONTRACTOR'S SOLE EXPENSE. NOTIFY CONSTRUCTION MANAGER IF CONFLICTS ARE PRESENT.

D. CONTRACTOR SHALL EMPLOY AN UNDERGROUND UTILITY LOCATOR SUCH AS "INFRAMAP" FOR THE LOCATION OF ALL UTILITIES WITHIN THE PROJECT LIMITS PRIOR TO THE START OF CONSTRUCTION.

E. SHOULD CONFLICTS RISE BETWEEN THE PROPOSED IMPROVEMENTS SHOWN AND THE LOCATION OF EXISTING UTILITIES, THE CONTRACTOR SHALL CONTACT THE CONSTRUCTION MANAGER FOR RESOLUTION PRIOR TO INSTALLATION.

III. APPLICABLE CODES

A. ALL CONSTRUCTION AND MATERIALS SHALL CONFORM TO THE STANDARDS AND SPECIFICATIONS OF THE CITY OF LAKE WORTH AND ALL OTHER LOCAL, STATE AND NATIONAL CODES WHERE APPLICABLE. IN THE EVENT OF A CONFLICT, CITY OF LAKE WORTH SPECIFICATIONS WILL GOVERN.

B. ALL CONSTRUCTION WILL BE DONE IN A SAFE MANNER AND IN STRICT COMPLIANCE WITH ALL THE REQUIREMENTS OF THE FEDERAL OCCUPATIONAL SAFETY AND HEALTH ACT OF 1970, AND ALL STATE AND LOCAL SAFETY AND HEALTH REGULATIONS.

IV. PRE CONSTRUCTION RESPONSIBILITIES

A. UPON THE RECEIPT OF THE "NOTICE TO PROCEED", THE CONTRACTOR SHALL CONTACT THE OWNER AND ARRANGE A PRE CONSTRUCTION CONFERENCE TO INCLUDE ALL INVOLVED GOVERNMENTAL AGENCIES, UTILITY OWNERS AND THE OWNER.

B. THE CONTRACTOR SHALL OBTAIN A SUNSHINE STATE ONE CALL OF FLORIDA, INC. CERTIFICATION NUMBER AT LEAST 48 HOURS PRIOR TO BEGINNING ANY EXCAVATION. CALL 1-800-432-4770.

C. ALL UTILITY EASEMENTS TO BE SECURED PRIOR TO CONSTRUCTION (IF REQUIRED).

D. LOCATION OF EXISTING FACILITIES AS SHOWN ON CONSTRUCTION DRAWINGS ARE DRAWN FROM AVAILABLE RECORDS PROVIDED BY THE SURVEYOR (WHIDDEN SURVEYING AND MAPPING INC). THE ENGINEER ASSUMES NO RESPONSIBILITY FOR THE ACCURACY OF THE FACILITIES SHOWN OR FOR ANY FACILITY THAT IS NOT SHOWN. THE CONTRACTOR SHALL VERIFY THE ELEVATIONS AND LOCATIONS OF EXISTING FACILITIES PRIOR TO CONSTRUCTION. IF AN EXISTING FACILITY IS FOUND TO CONFLICT WITH THE PROPOSED CONSTRUCTION UPON EXCAVATION, THE CONTRACTOR SHALL IMMEDIATELY NOTIFY THE CONSTRUCTION MANAGER OF RECORD SO THAT APPROPRIATE MEASURES CAN BE TAKEN TO RESOLVE THE PROBLEM.

V. INSPECTIONS

A. THE CONTRACTOR SHALL NOTIFY THE CITY OF LAKE WORTH WATER AND SEWER UTILITIES DEPARTMENT, THE CONSTRUCTION MANAGER, AND ANY OTHER GOVERNMENTAL AGENCIES HAVING JURISDICTION AT LEAST 48 HOURS PRIOR TO BEGINNING CONSTRUCTION AND PRIOR TO THE INSPECTION OF THE FOLLOWING ITEMS, WHERE APPLICABLE.

VI. PIPE, VALVES AND FITTINGS

A. PIPE AND FITTINGS: SHALL BE DUCTILE IRON PIPE AS DESIGNED BY ANSI/AWWA C150/A21.50 AND MANUFACTURED TO ANSI/AWWA C151/A21.51, SUPPLIED WITH RUBBER GASKET PUSH-ON JOINTS IN ACCORDANCE WITH ANSI/AWWA C111/A21.11. PIPE SHALL BE SUPPLIED IN MINIMUM PRESSURE CLASS 250 IN ACCORDANCE WITH AWWA C115. PIPES SHALL BE EPOXY LINED. EPOXY LINING SHALL BE FUSION BONDED BOTH INTERIOR AND EXTERIOR AND CONFORM TO ANSI/ AWWA C116/A21.16

1. JOINTS:
   a. FLANGED: CANDIDATE FLANGED PIPE THREAD-FABRICATION SHALL BE SPECIAL THICKNESS CLASS 53 IN ACCORDANCE WITH AWWA C115. BOLT CIRCLE AND BOLT HOLES MATCH THOSE OF ANSI B16.1 CLASS 125. THE FLANGES SHALL BE RATED FOR AT LEAST 250 PSI WORKING PRESSURE. BOLTS, GASKETS, AND INSTALLATION SHALL BE IN ACCORDANCE WITH AWWA C115, APPENDIX A REQUIREMENTS, AND FLANGED GASKETS SHALL BE TORUSEAL GASKETS, WITH A SPECIAL SEAL DESIGN. GASKETS SHALL BE FULL-FACE TORUSEAL DESIGN FOR ALL SERVICE INSTALLATIONS. FLANGE FACING SHALL BE SHALL BE SMOOTH OR WITH SHALLOW SERRATIONS PER AWWA C115. FLANGE BOLTS PROVIDED SHALL BE STAINLESS STEEL.

2. FITTINGS:
   a. MECHANICAL JOINT: DUCTILE IRON ASTM A536 GRADE 70-50-05 CONFORMING TO ANSI/AWWA C153/A21.53 OR C110/A21.10 WITH A MINIMUM RATED WORKING PRESSURE OF 250 PSI. PROVIDE FITTINGS WITH BELLS AND GASKETS SPECIFICALLY DESIGNED FOR CAST IRON EQUIVALENT OUTSIDE DIAMETER PIPE IN ACCORDANCE WITH ANSI/AWWA C111/A21.11. GASKETS SHALL BE STANDARD STYRENE BUTADIENE COPOLYMER (SBR.) FITTINGS SHALL BE MECHANICAL JOINT AND EPOXY LINED. EPOXY LINING SHALL BE FUSION BONDED BOTH INTERIOR AND EXTERIOR AND CONFORM TO ANSI/ AWWA C116/A21.16.
   b. FLANGED: FLANGE FITTINGS SHALL BE DUCTILE IRON IN ACCORDANCE WITH AWWA C110 OR AWWA C153, NOT ANSI B16.1. BOLT CIRCLE AND BOLT HOLES SHALL MATCH THOSE OF ANSI B16.1 CLASS 125. FITTINGS SHALL BE EPOXY LINED. THE EPOXY LINING SHALL BE FUSION BONDED BOTH INTERIOR AND EXTERIOR AND CONFORM TO ANSI/ AWWA C116/A21.16.
3. SCREW SET: BOLTS TO BE 316SS, NUTS 304SS.
4. COATING: FLANGED PIPE AND FITTINGS SHALL BE EPOXY LINED. EPOXY LINING SHALL BE FUSION BONDED BOTH INTERIOR AND EXTERIOR AND CONFORM TO ANSI/AWWA C116/A21.16.
5. COLOR CODING: DUCTILE IRON PIPE SHALL BE COLOR CODED AS PER F.A.C. 62-555.320(21)(b)3.
6. MARKING: PIPE SHALL BE LEGIBLY AND PERMANENTLY MARKED WITH THE FOLLOWING INFORMATION:
   a. CLASS OR NOMINAL THICKNESS
   b. MANUFACTURER'S NAME OR TRADEMARK AND PRODUCTION RECORD CODE
   c. PRODUCTION DATE (MONTH, YEAR)
   d. LETTERS "DI"OR "DUCTILE" SHALL BE CAST OR STAMPED ON THE PIPE.
7. ACCEPTABLE MANUFACTURERS:
   a. AMERICAN DUCTILE IRON PIPE
   b. US PIPE
   c. CLOW
8. TAPE WRAP SHALL BE 15 MIL BUTYL RUBBER ADHESIVE, POLYETHYLENE BACKED TAPE AS MANUFACTURED BY POLYKEN DIVISION OF THE KENDALL COMPANY, BOSTON, MA; ROYSTON LABORATORIES, INC., PITTSBURGH, PA; OR EQUAL.
9. GATE VALVES:
   a. GATE VALVES SHALL BE MSS-SP-70, CLASS 125, MOUNTED, DUCTILE IRON BODY, INSIDE SCREW TYPE WITH NO-RISING STEM, WITH 2" SQUARE WRENCH NUTS. DIRECTION OF ROTATION TO OPEN VALVES SHALL BE COUNTERCLOCKWISE. VALVES SHALL MEET THE REQUIREMENTS OF AWWA C500-80. ENDS SHALL BE FLANGED. VALVES SHALL BE A-2361 RESILIENT WEDGE GATE VALVES - FLXFL MANUFACTURED BY MUELLER, CLOW OR AMERICAN DARLING COMPANIES. VALVES SHALL BE FURNISHED WITH ALL JOINTING ACCESSORIES.
   b. VALVE BOXES: BURIED VALVES SHALL HAVE CAST IRON VALVE BOXES WITH CAST IRON COVERS, AS MADE BY TYLER UNION. VALVE BOXES SHALL BE PROVIDED WITH SUITABLE HEAVY BONNETS AND WILL EXTEND TO AN ELEVATION AT OR SLIGHTLY ABOVE THE FINISHED GRADE SURFACE AS DIRECTED BY THE ENGINEER. THE BARREL SHALL BE ONE OR TWO PIECE, SCREW TYPE, HAVING A 5-1/4 INCH SHAFT DIAMETER. COVERS SHALL HAVE "WATER", CAST INTO THE TOP AND SHALL BE PAINTED THE CORRESPONDING COLOR FOR THE PIPE COMMODITY THAT THEY ARE FOR. ALL VALVES SHALL HAVE ACTUATING NUTS EXTENDED TO WITHIN SIX INCHES OF THE TOP OF VALVE BOX COVER.
10. CHECK VALVES:
    THE VALVES TO BE OPENED BY THE FLUID FLOW IN ONE DIRECTION AND CLOSE AUTOMATICALLY TO PREVENT FLOW IN THE REVERSE DIRECTION. VALVE BODY AND COVERS SHALL BE DUCTILE IRON TO ASTM A536. ENDS SHALL BE FLANGED. ALL SURFACES SHALL BE SHOT BLASTED, PREHEATED AND HAVE AN ELECTRO STATICALLY APPLIED, OVEN CURED FUSION BONDED NSF 61 APPROVED EPOXY COATING. THE VALVE SEAT, OPERATING SHAFT, ALL INTERNAL SCREWS, BOLTS SHALL BE 316 SS, AND NUTS SHALL BE SAE 304 STAINLESS STEEL. THE VALVE SPRING SHALL BE 302 STAINLESS STEEL. VALVE BEARING SHALL BE BRONZE ASTM B 62. THE DISC SEAL, THE NYLON FABRIC BONDED RUBBER DIAPHRAGM, AND ALL O RINGS SHALL BE BUNA N. PILOT CONTROL SHALL BE STAINLESS STEEL. VALVES SHALL BE SWING TYPE GRAVITY OPERATED CHECK VALVE-FLXFL, D.I.BOLT, 200 P516 MAX WORKING PRESSURE AS MANUFACTURED BY MUELLER, OR CLOW OR AMERICAN DARLING COMPANIES. VALVES SHALL BE FURNISHED WITH ALL JOINTING ACCESSORIES. EACH VALVE WILL BE INSTALLED INSIDE PRECAST CONCRETE VAULT. SEAL VAULT JOINTS WATERTIGHT WITH PREFORMED PLASTIC JOINT SEALANT COMPOUND. APPLY ASPHALT WATER PROOFING TO EXTERIOR WALLS. SEAL ANNULAR SPACE BETWEEN PIPE AND WALL SLEEVES WITH NON-SHRINKING GROUT. INSTALL VAULT COVERS AND FRAME: ADJUST TO FINISHED GRADE ELEVATION.
11. PIPES:
    ALL PIPE JOINTS SHALL BE RESTRAINED.

VII. PREPARATION OF TRENCH

A. PIPE BASE: A SUITABLE TRENCH BOTTOM MATERIAL COVERING THAT AREA OF THE PIPE TRENCH BETWEEN THE BOTTOM OF THE TRENCH AND THE FLOW LINE OF THE PIPE, EXTENDING THE FULL WIDTH AND LENGTH OF THE TRENCH.

B. PIPE ZONE: THAT AREA OF THE PIPE TRENCH BETWEEN THE TOP OF THE PIPE BASE AND A PLANE ABOVE THE PIPE EXTENDING THE FULL WIDTH AND LENGTH OF THE TRENCH. SEE "EXECUTION" FOR THE DISTANCE OF THE PIPE ZONE ABOVE THE PIPE.

C. PIPE BASE AND PIPE ZONE MATERIAL:
1. PIPE BASE AND PIPE ZONE MATERIAL FOR DUCTILE IRON AND PIPE 16 INCHES IN DIAMETER AND SMALLER SHALL BE CLEAN PEA GRAVEL OR CRUSHED ROCK WITH A MAXIMUM SIZE OF ¾ INCH, UNIFORMLY GRADED FROM COARSE TO FINE. CLEAN BEACH, PIT-RUN, OR REJECTED CRUSHER-RUN SAND MAY BE SUBSTITUTED FOR BASE MATERIAL IN TRENCHES WITH NO GROUNDWATER IN PIPE ZONE.
2. SELECTED TRENCH SIDE MATERIAL MAY BE SUBSTITUTED FOR THE PIPE ZONE MATERIAL HEREINBEFORE SPECIFIED ONLY WHERE APPROVED BY THE OWNER. MATERIAL SHALL BE FRIABLE AND CONTAIN NO ROCK, CLAY MASSES, CLODS, FROZEN SOIL, OR OTHER PIECES OF MATERIAL LARGER THAN THE MAXIMUM SIZE SPECIFIED HEREINBEFORE FOR THE APPLICABLE PIPING MATERIAL.

D. EXCAVATION AND BACKFILL
1. EXCAVATION: TRENCHES FOR ALL UNDERGROUND PIPELINES SHALL BE EXCAVATED TO THE REQUIRED DEPTHS. THE BOTTOM OF TRENCHES SHALL BE TAMPED HARD AND GRADED TO SECURE THE REQUIRED FALL. BELL OR FLANGE HOLES SHALL BE EXCAVATED SO THAT PIPE WILL REST ON SOLID GROUND FOR ITS ENTIRE LENGTH. ROCK, WHERE ENCOUNTERED, SHALL BE EXCAVATED TO A DEPTH OF 6" BELOW THE BOTTOM OF THE PIPE AND, BEFORE PIPE IS LAID, THE SPACE BETWEEN THE BOTTOM OF THE PIPE AND ROCK SHALL BE FILLED WITH APPROVED BACKFILL MATERIAL.
2. BACKFILLING: AFTER PIPELINES HAVE BEEN TESTED, INSPECTED AND APPROVED BY THE OWNER, AND PRIOR TO BACKFILLING, FORMS SHALL BE REMOVED AND THE EXCAVATION SHALL BE CLEANED OF TRASH AND DEBRIS. MATERIALS FOR BACKFILLING SHALL CONSIST OF THE EXCAVATION OR BORROW OF SAND, GRAVEL OR OTHER APPROVED MATERIAL AND SHALL BE FREE OF TRASH, LUMBER, OR OTHER DEBRIS. BACKFILL SHALL BE PLACED IN HORIZONTAL LAYERS OF 6 INCHES IN THICKNESS, EACH LAYER BEING PROPERLY MOISTENED AND COMPACTED. BACKFILL SHALL BE BROUGHT TO A SUITABLE ELEVATION ABOVE GRADE TO PROVIDE FOR SETTLEMENT AND SHRINKAGE.
3. COMPACTION: COMPACT BACKFILL SOIL TO 98% OF THE MODIFIED PROCTOR MAXIMUM DRY DENSITY IN ACCORDANCE WITH AASHTO T-180. REFER TO DETAIL IN SHEET C1-6.

VIII. TESTING

CONTRACTOR SHALL PREPARE A FLUSHING, PRESSURE TEST, DISINFECTION AND PALM BEACH COUNTY HEALTH DEPARTMENT (PBC HD) CLEARANCE PLAN FOR REVIEW AND AUTHORIZATION BY THE PROJECT MANAGER PRIOR TO WATER PIPE LINE INSTALLATION. THE PLAN SHALL INCLUDE A SCHEMATIC THAT INDICATES SWAB LOCATIONS, DIRECTION OF FLUSH, SAMPLE POINTS AND AFFECTED VALVES. THE PBC HD CLEARANCE REQUIRES THE CONTRACTOR'S PRESSURE TEST REPORT, DISINFECTION REPORT, LAB REPORTS AND AS-BUILT DRAWINGS.

1. CLEANING AND FLUSHING:
   a. UPON COMPLETION OF PIPE INSTALLATION, FOR ANY SECTION, PERFORM SWABBING AND CANNON FLUSHING IN ACCORDANCE WITH THE CLEANING AND FLUSHING PROCEDURE DETAIL SHOWN ON THE PROJECT CONSTRUCTION DRAWINGS. THE PROJECT MANAGER MUST OBSERVE THE SWAB BEING INSERTED INTO THE LINE AND WITNESS THE CLEANING AND FLUSHING PROCESS. THE SWAB IS TO BE ONE (1) PIPE SIZE DIAMETER LARGER THAN THE PIPE BEING CLEANED.
2. PRESSURE:
   a. PRIOR TO CONDUCTING THE OFFICIAL PRESSURE TEST, TO BE WITNESSED BY THE PROJECT MANAGER AND ENGINEER, THE CONTRACTOR SHALL CONDUCT AND DOCUMENT A PRELIMINARY PRESSURE TEST MEETING ALL OF THE FOLLOWING REQUIREMENTS.
   b. POTABLE WATER SHALL BE SUPPLIED TO THE MAIN AND PUMPED TO THE MINIMUM OF 155 PSI. THE WATER MAIN BEING TESTED SHALL BE SEPARATED FROM THE SUPPLY LINE OR ISOLATED BY A DOUBLE VALVE ARRANGEMENT.
   c. THE CONTRACTOR SHALL PREPARE A DOCUMENTED TEST REPORT FOR EACH TEST IDENTIFYING, DATE, TIME, WEATHER, LINEAR FOOT OF PIPE BEING TESTED, THE PIPING SEGMENT TESTED (STATION TO STATION), BEGINNING TEST PRESSURE AND TIME, ENDING TEST PRESSURE AND TIME, AMOUNT OF "MAKE-UP" WATER AND A CLEAR "PASS / FAIL" STATEMENT. THE TEST REPORT SHALL BE SIGNED BY THE CONTRACTOR, ENGINEER AND PROJECT MANAGER. AFTER TEST ACCEPTANCE, CONTRACTOR SHALL PROVIDE COPIES OF THE TEST REPORT TO THE PROJECT MANAGER AND ENGINEER AND RETAIN THE ORIGINAL TEST REPORT FOR INCLUSION IN THE PROJECT RECORD DOCUMENTS.
   d. CONTRACTOR SHALL PROVIDE ALL NECESSARY EQUIPMENT SUCH AS PUMPS, GAGES AND WATER MEASURING TANKS, AND ALL NECESSARY WORK REQUIRED FOR PIPE PRESSURE AND LEAKAGE TESTS. MAKE PRESSURE AND LEAKAGE TESTS BETWEEN VALVES AND/OR CONNECTIONS FOR EACH SECTION BEING TESTED, USING PROCEDURE OUTLINED IN ANSI/AWWA C-600.
   e. TEST LINES AT A MINIMUM OF 155 PSI FOR NO LESS THAN TWO (2) HOURS.
   f. ALLOWABLE LEAKAGE NOT TO EXCEED VALUE DERIVED FROM FOLLOWING FORMULA:
      L = (SD x SQUARE ROOT OF P)/148,000.
      L = ALLOWABLE LEAKAGE (GALLON PER HOUR)
      S = LENGTH OF PIPE (FEET)
      D = NOMINAL DIAMETER OF PIPE (INCHES)
      P = AVERAGE TEST PRESSURE (PSIG)
   g. CONDUCT PRESSURE TESTS WITH ALL VALVES SERVICING HYDRANTS, SERVICES, ETC., IN OPEN POSITION.
   h. ALL POTABLE WATER MAINS SHALL BE PRESSURE TESTED BEFORE BACTERIOLOGICAL ACCEPTABILITY.
   i. THE TEST SHALL BE PERFORMED AS DETERMINED IN THE CURRENT AWWA SPECIFICATION. THE STANDARD TEST DURATION IS TWO (2) HOURS. THE MAXIMUM QUANTITY OF WATER THAT MUST BE SUPPLIED INTO THE TESTED PIPE TO MAINTAIN PRESSURE WITHIN 5 PSI OF THE SPECIFIED TEST PRESSURE SHALL NOT EXCEED THE APPLICABLE AWWA C-600 STANDARD.
   j. BACTERIOLOGICAL TESTING SHALL NOT BEGIN UNTIL AFTER THE PRESSURE TEST HAS BEEN ACCEPTED BY THE PROJECT MANAGER.
3. DISINFECTANT:
   a. LIQUID CHLORINE CONFORMING TO ANSI/AWWA B301 (100% AVAILABLE CHLORINE).
   b. SODIUM HYPOCHLORITE CONFORMING TO ANSI/AWWA B300 (5% - 15% AVAILABLE CHLORINE.
   c. CALCIUM HYPOCHLORITE CONFORMING TO ANSI/AWWA B300 (65% AVAILABLE CHLORINE BY WEIGHT).

IX. DISINFECTION REPORT AND RECORD DOCUMENT

1. DISINFECTION REPORT FROM CONTRACTOR SHALL BE SIGNED AND DATED:
   a. COMPANY NAME.
   b. TYPE, FORM AND QUANTITY OF DISINFECTANT USED.
   c. DIAMETERS AND LENGTHS (IN LINEAR FEET) OF PIPE BEING DISINFECTED.
   d. DATE AND TIME OF DISINFECTANT INJECTION START AND TIME OF COMPLETION (CONTINUOUS FEED METHOD).
   e. TEST LOCATIONS (1 SET FOR EVERY 1,200 LF OF PIPE, 1 FROM EVERY BRANCH AND 1 FROM THE END OF THE LINE).
   f. INITIAL AND 24 HOUR DISINFECTANT RESIDUALS (QUANTITY IN TREATED WATER) IN PPM AND/OR MG/L FOR EACH OUTLET TESTED.
   g. DURING THE 24 HOUR DISINFECTION PROCESS, CONTRACTOR SHALL OPERATE ALL INLINE AND BRANCH VALVES.
   h. AT THE END OF THE 24 HOUR DISINFECTION PROCESS THE FREE CHLORINE RESIDUAL SHALL NOT BE LESS THAN 25 PPM OR 25MG/L.
   i. DATE AND TIME OF FLUSHING START AND COMPLETION
   j. DISINFECTANT RESIDUAL AFTER FLUSHING IN PPM FOR EACH OUTLET TESTED.
   k. AT THE CONCLUSION OF THE CONTRACTOR'S DISINFECTION AND FLUSHING PROCESS, THE TOTAL CHLORINE (IN PPM) SHALL BE EQUAL TO THAT OF THE CITY'S POTABLE WATER SYSTEM SOURCE POINT.
2. BACTERIOLOGICAL REPORT:
   a. DATE ISSUED, PROJECT NAME, AND TESTING LABORATORY NAME, ADDRESS, AND TELEPHONE NUMBER.
   b. TIME AND DATE OF WATER SAMPLE COLLECTION.
   c. NAME OF PERSON COLLECTING SAMPLES
   d. SAMPLE POINT NUMBERS AND TEST LOCATIONS.
   e. INITIAL AND 24 HOUR DISINFECTANT RESIDUALS IN PPM FOR EACH OUTLET TESTED.
   f. COLIFORM BACTERIA TEST RESULTS FOR EACH OUTLET TESTED
   g. SIGNED CERTIFICATION THAT WATER CONFORMS, OR FAILS TO CONFORM, TO BACTERIAL STANDARDS OF THE PALM BEACH COUNTY HEALTH DEPARTMENT.
3. PALM BEACH COUNTY HEALTH DEPARTMENT RELEASE.

X. RESTORATION OF SURFACE IMPROVEMENTS

1. RESTORATION OF SURFACE IMPROVEMENTS SHALL BE CONCURRENT WITH THE INSTALLATION OF THE WATER MAIN PIPES, VAULTS AND APPURTENANCES. AREAS AFFECTED BY THE WORK SHALL BE RESTORED TO A CONDITION EQUAL TO OR BETTER THAN CONDITION EXISTING BEFORE THE COMMENCEMENT OF THE WORK. RESTORATION WORK INCLUDES RE-GRADING, SODDING, SEED AND MULCH, RESTORATION OF CONCRETE SIDEWALK, ASPHALT PAVEMENT AND GRANULATED MATERIAL SURFACE (FDOT 57 STONE AND SIMILAR), WHERE APPLICABLE. BIDDERS ARE ENCOURAGED TO INSPECT THE SITE TO IDENTIFY THE TYPE OF RESTORATION NEEDED IN EACH LOCATION DUE TO THE VARIOUS TYPES PRESENT AS IDENTIFIED.

City of Lake Worth
North Elevated Tank & North Booster Pump
TOPOGRAPHIC SURVEY
SECTION 16, TOWNSHIP 44 SOUTH, RANGE 43 EAST
PALM BEACH COUNTY, FLORIDA

LOCATION MAP
1"=150'

SURVEYOR'S NOTES

1. THIS IS A TOPOGRAPHIC SURVEY AS DEFINED IN CHAPTER 5J-17, FLORIDA ADMINISTRATIVE CODE AND WAS PREPARED AT THE REQUEST OF ANA DEMELO, PE, PROJECT MANAGER FOR URS CORPORATION TO AID IN THEIR EFFORTS WITH THE CITY OF LAKE WORTH.
THE SURVEY FOR THIS PROJECT WILL INCLUDE A TOPOGRAPHIC DATA OF THE PROPOSED EXFILTRATION SITE AS:

2. BEARINGS AND COORDINATES AS SHOWN HEREON ARE BASED ON STATE PLANE COORDINATES FLORIDA EAST ZONE NORTH AMERICAN DATUM OF 1983 (NAD83) ADJUSTMENT OF 2010 AND WERE ESTABLISHED BY REDUNDANT GPS OBSERVATIONS UTILIZING THE TRIMBLE VIRTUAL REFERENCE SYSTEM AND NGS CONTROL STATIONS.

3. THERE MAY BE ADDITIONAL EASEMENTS AND/OR RESTRICTIONS NOT SHOWN HEREON THAT MAY BENEFIT OR ENCUMBER THE LAND SHOWN HEREON.

4. LOCATION OF IMPROVEMENTS SHOWN HEREON WERE OBSERVED UTILIZING REAL TIME KINEMATIC (RTK) GPS PROCEDURES WHICH MEET OR EXCEED THIRD ORDER CLASS 1 SPECIFICATIONS AS WELL AS A TRIMBLE S-6 ROBOTIC TOTAL STATION.

5. UNDERGROUND FOUNDATIONS OR UTILITIES WERE NOT LOCATED.

6. UNLESS IT BEARS THE SIGNATURE AND ORIGINAL RAISED SEAL OF A FLORIDA LICENSED SURVEYOR AND MAPPER, THIS DRAWING, SKETCH, PLAT OR MAP(S) IS FOR INFORMATIONAL PURPOSE ONLY AND IS NOT VALID.

7. ADDITIONS OR DELETIONS TO THE SURVEY MAPS OR REPORTS BY OTHER THAN THE SIGNING PARTY OR PARTIES IS PROHIBITED WITHOUT THE WRITTEN CONSENT OF THE SIGNING PARTY OR PARTIES.

8. THE IMAGERY SHOWN HEREON WAS OBTAINED FROM THE SOUTH FLORIDA WATER MANAGEMENT DISTRICT, HAS A FLIGHT DATE OF MAY 2011 AND 0.5 PIXEL RESOLUTION.

9. DATE OF FIELD SURVEY AND LAST SITE INSPECTION – OCTOBER 7, 2015.

10. THIS PROPERTY FALLS WITHIN THE COMMERCIAL RISK CATEGORY AS CLASSIFIED IN CHAPTER 5J-17, FLORIDA ADMINISTRATIVE CODE. ALL FIELD CONTROL MEASUREMENTS EXCEEDED THE ACCURACY REQUIREMENTS FOR THIS CLASSIFICATION.

11. THE CONTROL POINT ELEVATIONS SHOWN HEREON WERE OBTAINED FROM A THIRD ORDER LEVEL RUN FROM NGS PUBLISHED BENCHMARK "M 402" UTILIZING A DINI 22 DIGITAL LEVEL. ALL SECONDARY ELEVATIONS WERE OBTAINED FROM A TRIMBLE S-6 ROBOTIC TOTAL STATION. ALL ELEVATIONS SHOWN HEREON ARE RELATIVE TO NORTH AMERICAN VERTICAL DATUM OF 1988 (NAVD88).

CERTIFICATE OF SURVEYOR:

I HEREBY CERTIFY THAT THIS TOPOGRAPHIC SURVEY WAS MADE UNDER MY RESPONSIBLE CHARGE AND MEETS THE APPLICABLE MINIMUM TECHNICAL STANDARDS FOR SURVEYS AS SET FORTH BY THE FLORIDA BOARD OF LAND SURVEYORS IN CHAPTER 5J-17, FLORIDA ADMINISTRATIVE CODE, PURSUANT TO SECTION 472.027, FLORIDA STATE STATUTES.

THOMAS E. WHIDDEN
PROFESSIONAL SURVEYOR AND MAPPER
FLORIDA CERTIFICATION NUMBER 6225

THIS MAP IS INTENDED TO BE DISPLAYED AT A SCALE OF 1"=30' OR SMALLER

LEGEND & ABBREVIATIONS

CMP = CORRUGATED METAL PIPE
CCE = ARMY CORPS OF ENGINEERS
P.B. = PLAT BOOK
PG = PAGE
OHW = OVERHEAD WIRES
O.R.B. = OFFICIAL RECORD BOOK OF PALM BEACH COUNTY
= WOOD UTILITY POLE
= PALM TREE
= TREE
= GUY ANCHOR
= SPRINKLER HEAD
= LIGHT POLE
= SIGN
= FIRE HYDRANT
= WATER VALVE
= WATER METER
= CALCULATED SECTION CORNER
HDPE = CORRUGATED PLASTIC PIPE
PVC = POLY VINYL CHLORIDE
ENCR. = ENCROACHING
CORS = CONTINUOUS OPERATING REFERENCE STATION
R/W = RIGHT OF WAY
(C) = CALCULATED
(P) = PLAT DIMENSION
R = RADIUS
L = ARC LENGTH
D = CENTRAL ANGLE
P.I. = POINT OF INTERSECTION
℄ = CENTERLINE
= SANITARY SEWER MANHOLE
= DRAINAGE MANHOLE
AT&T = AMERICAN TELEPHONE & TELEGRAPH
F.E.C. = FLORIDA EAST COAST
P.I.D. = PERMENANT IDENTIFICATION NUMBER
= LANDSCAPE LIGHTS
W.C. = WITNESS CORNER
= CATCH BASIN
= CURB INLET

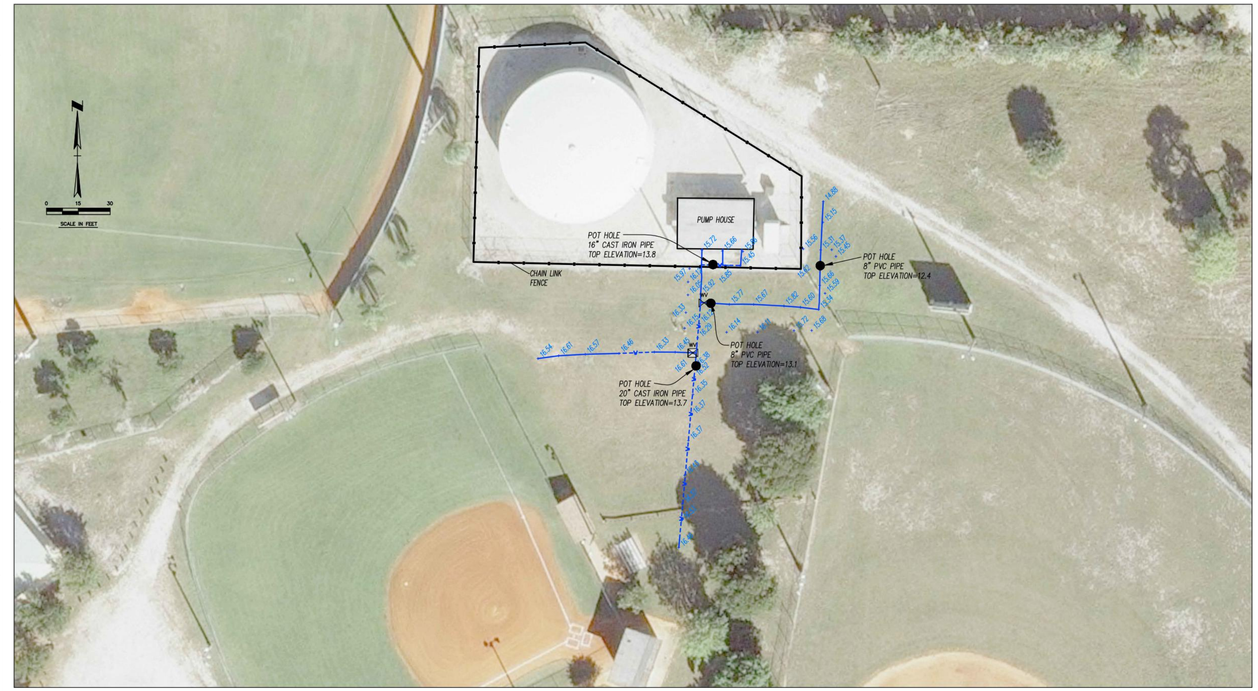

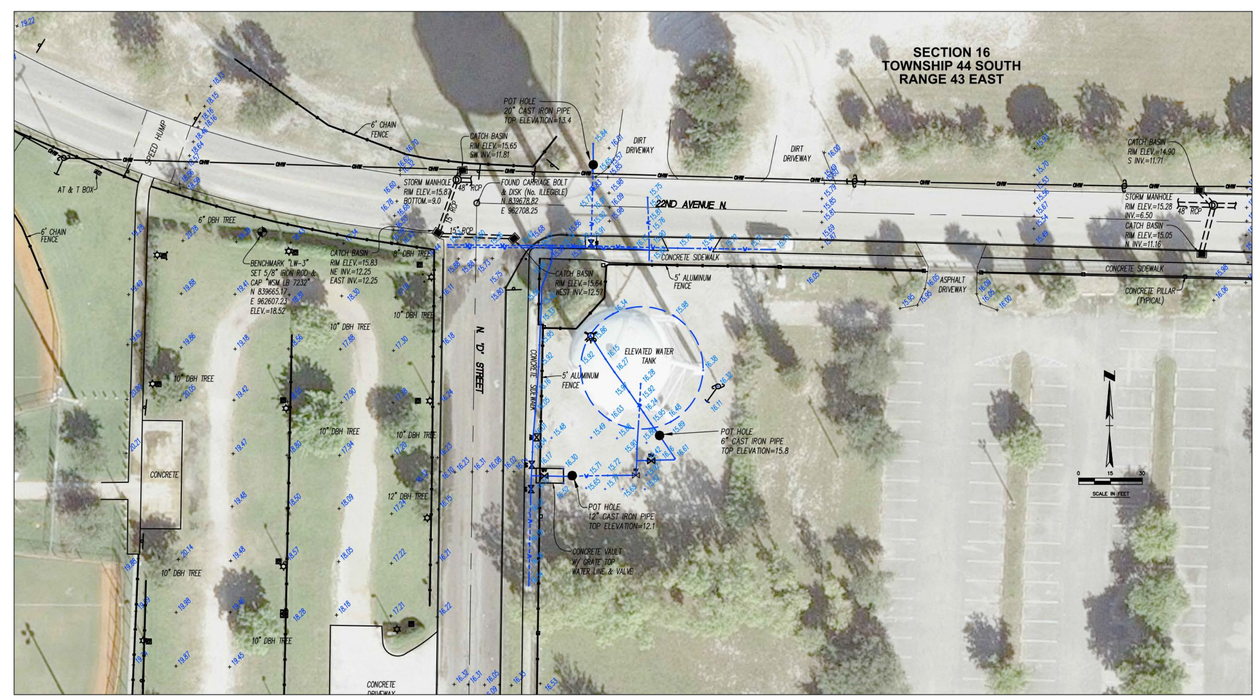

Whidden Surveying & Mapping, Inc.
9200 Belvedere Road, Ste 114
Royal Palm Beach, FL 33411
Phone: 561.790.5515
Fax: 561.790.6557
www.whiddensurveying.com
Licensed Buisness No. 7232

#	DATE	REVISIONS

DRAWN: | CHECKED: | DATE:

North Elevated Tank & North Booster Pump
TOPOGRAPHIC SURVEY
CITY OF LAKE WORTH, FLORIDA
SECTIONS: 16
TOWNSHIP: 44 SOUTH
RANGE: 43 EAST

DRAWING NO. ETBP
CAD FILE NO. ELEVATED TANK.dwg
SHEET 1 OF 1

DRAWN: CHECKED: DATE: 07/07/15
FIELD PERSON(S)
FIELD DATE(S):
FIELD BOOK(S):
PAGE(S):
DATA COLLECTOR FILE(S):

URS
7800 CONGRESS AVENUE, SUITE 200
BOCA RATON, FLORIDA 33487 -1350
PHONE: (561) 994-6500
FAX: (561) 994-6524
CERT. OF AUTHORIZATION NO. 0002

#	Date	Revision Description

CITY OF LAKE WORTH N. BOOSTER PUMP STATION AND ELEVATED TANK PIPING MODIFICATION PALM BEACH COUNTY, FLORIDA

SURVEY	
DWN: CDS	DSN: HDB
CHK: FN	SCALE: AS SHOWN
APV: ACD	DATE: 1/20/16

SHEET C0-3

Z:\60440020 – CLW N. BOOSTER PUMP & ELEV. TANK\BID SET REVISED\CAD\ C0-3.dwg Feb 26, 2016 – 2:00pm

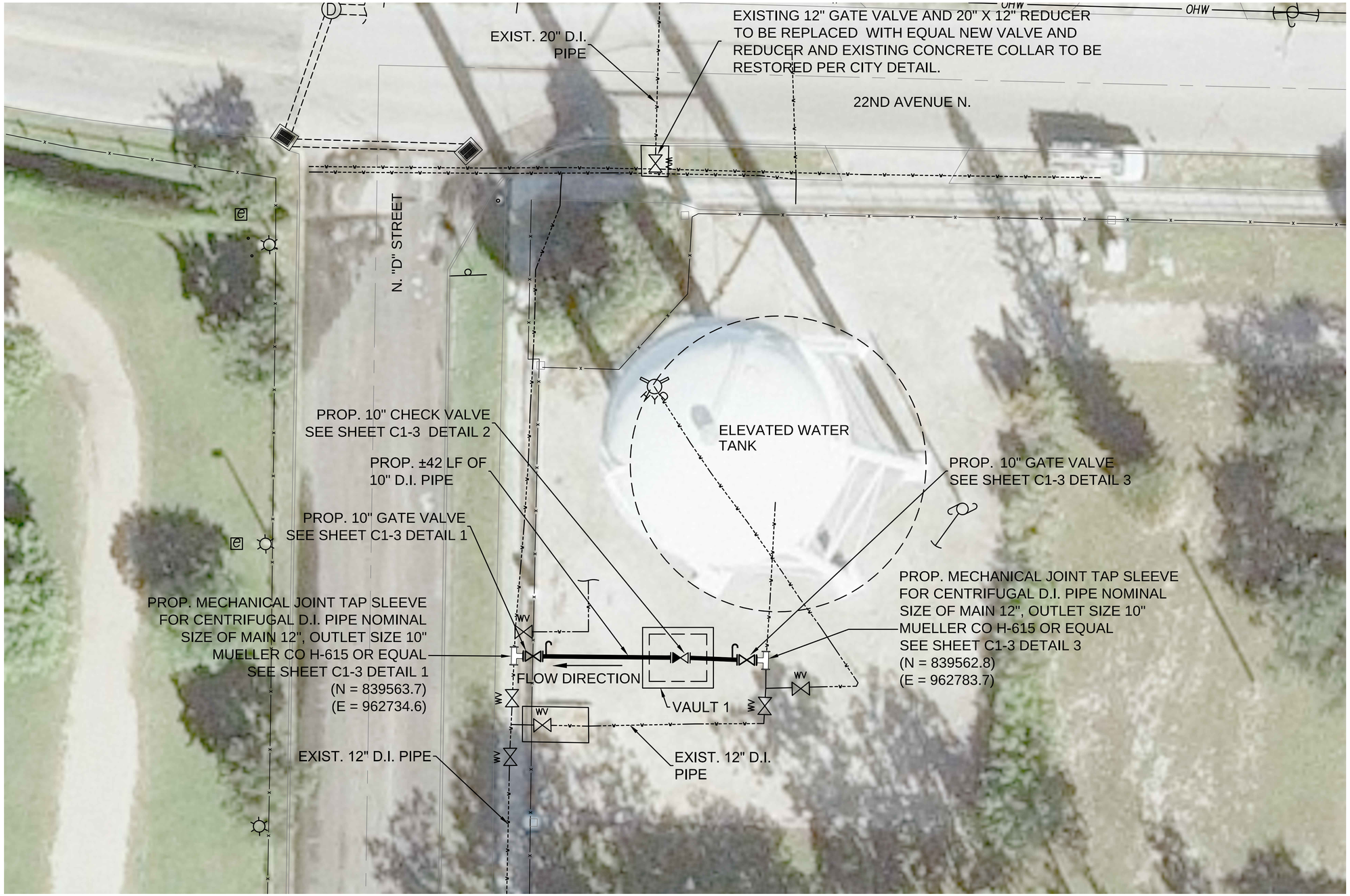

GRAPHIC SCALE

10' 0 5' 10' 20' 40'

SCALE: 1" = 10'-0"

NOTE:
D.I. PIPE POTABLE WATERMAIN COLOR CODED AS PER F.A.C. 62-555-320(21)(b)3.

Z:\60440020 - CLW N. BOOSTER PUMP & ELEV. TANK\BID SET REVISED\CAD\ C1-1.dwg Feb 26, 2016 - 2:01pm

URS
7800 CONGRESS AVENUE, SUITE 200
BOCA RATON, FLORIDA 33487 -1350
PHONE: (561) 994-6500
FAX: (561) 994-6524
CERT. OF AUTHORIZATION NO. 0002

DATE:_____

ENGINEER OF RECORD:
ANA C. DEMELO, P.E.
FL. REG. NUMBER: 57420

#	Date	Revision Description

CITY OF LAKE WORTH
N. BOOSTER PUMP STATION AND ELEVATED TANK PIPING MODIFICATION
PALM BEACH COUNTY, FLORIDA

ELEVATED TANK PIPING MODIFICATION PLAN

DWN: CDS	DSN: HDB
CHK: FN	SCALE: AS SHOWN
APV: ACD	DATE: 1/20/16

SHEET
C1-1

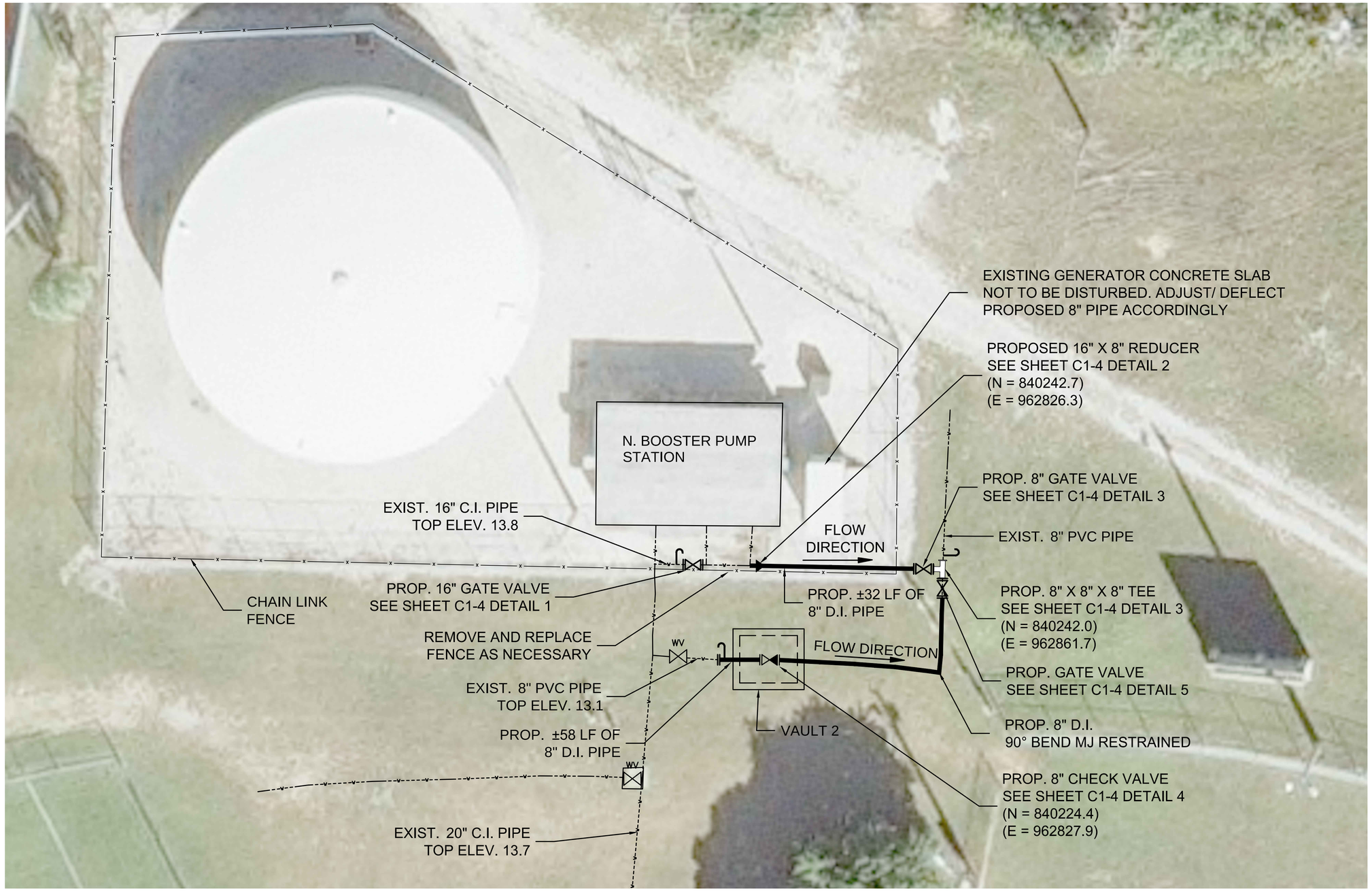

GRAPHIC SCALE

10' 0 5' 10' 20' 40'

SCALE: 1" = 10'-0"

NOTE:
D.I. PIPE POTABLE WATERMAIN COLOR CODED
AS PER F.A.C. 62-555-320(21)(b)3.

Z:\60440020 - CLW N. BOOSTER PUMP & ELEV. TANK\BID SET REVISED\CAD\ C1-2.dwg Feb 26, 2016 - 2:01pm

URS
7800 CONGRESS AVENUE, SUITE 200
BOCA RATON, FLORIDA 33487 -1350
PHONE: (561) 994-6500
FAX: (561) 994-6524
CERT. OF AUTHORIZATION NO. 0002

DATE:_____

ENGINEER OF RECORD:
ANA C. DEMELO, P.E.
FL. REG. NUMBER: 57420

#	Date	Revision Description

CITY OF LAKE WORTH
N. BOOSTER PUMP STATION AND
ELEVATED TANK PIPING MODIFICATION
PALM BEACH COUNTY, FLORIDA

N. BOOSTER PUMP STATION MODIFICATION PLAN

DWN: CDS	DSN: HDB
CHK: FN	SCALE: AS SHOWN
APV: ACD	DATE: 1/20/16

SHEET
C1-2

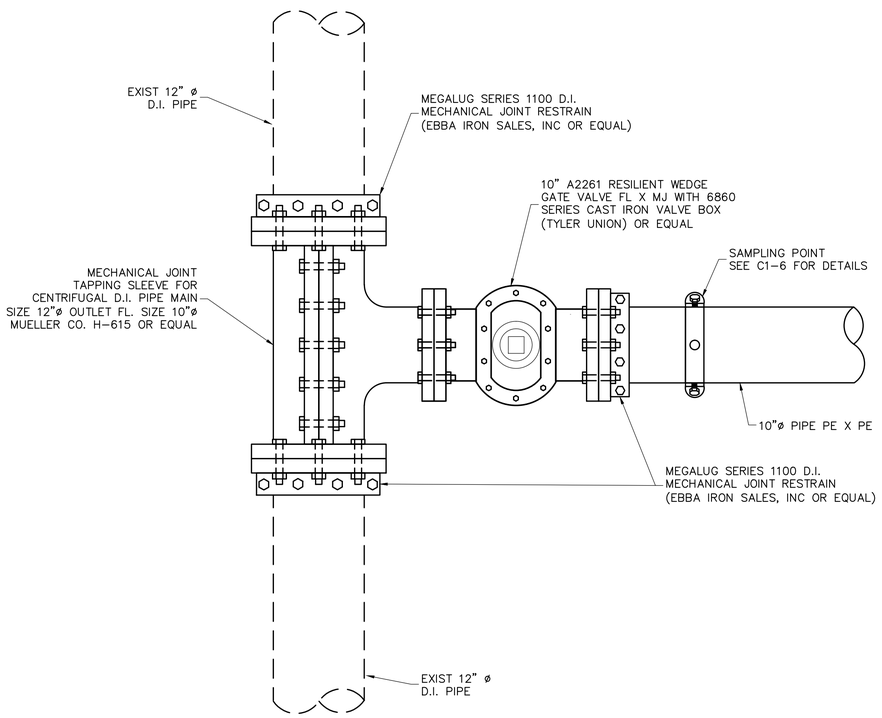

DETAIL 1
N.T.S.

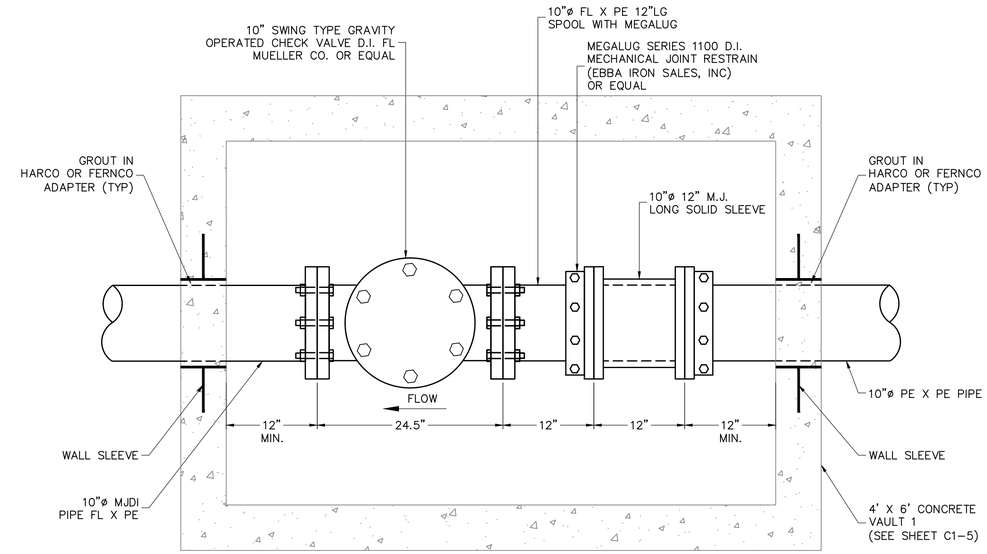

VAULT 1
DETAIL 2
N.T.S.

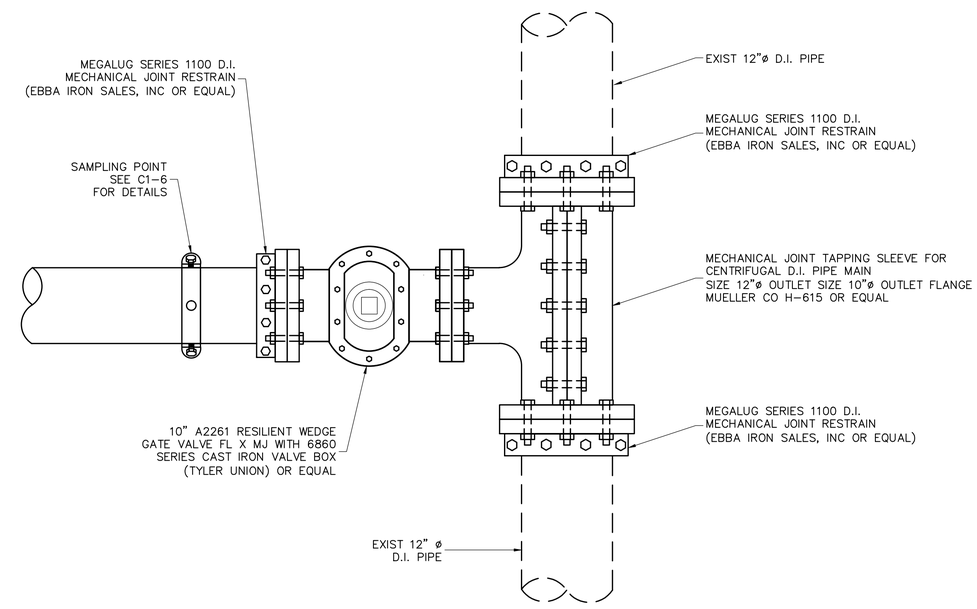

DETAIL 3
N.T.S.

URS
7800 CONGRESS AVENUE, SUITE 200
BOCA RATON, FLORIDA 33487 -1350
PHONE: (561) 994-6500
FAX: (561) 994-6524
CERT. OF AUTHORIZATION NO. 0002

DATE:_____

ENGINEER OF RECORD:
ANA C. DEMELO, P.E.
FL. REG. NUMBER: 57420

#	Date	Revision Description

CITY OF LAKE WORTH FLORIDA

CITY OF LAKE WORTH
N. BOOSTER PUMP STATION AND
ELEVATED TANK PIPING MODIFICATION
PALM BEACH COUNTY, FLORIDA

PIPING DETAILS 1 OF 2

DWN: CDS	DSN: HDB
CHK: FN	SCALE: AS SHOWN
APV: ACD	DATE: 1/20/16

SHEET
C1-3

Z:\60440020 - CLW N. BOOSTER PUMP & ELEV. TANK\BID SET REVISED\CAD\ C1-3.dwg Feb 26, 2016 - 2:01pm

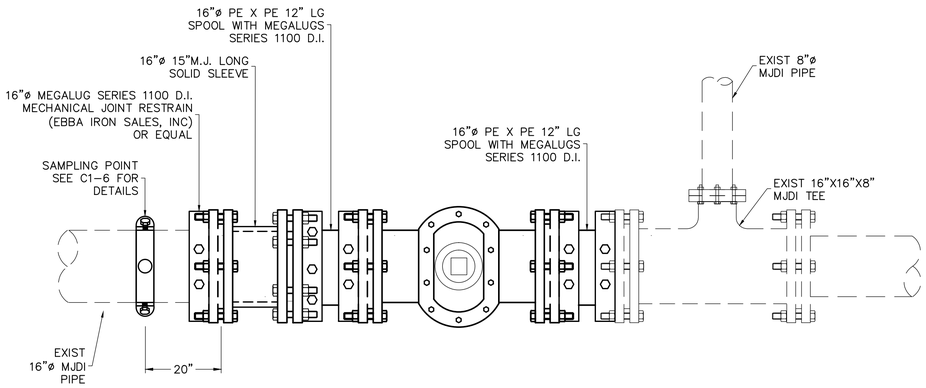

DETAIL 1 - PLAN
N.T.S.

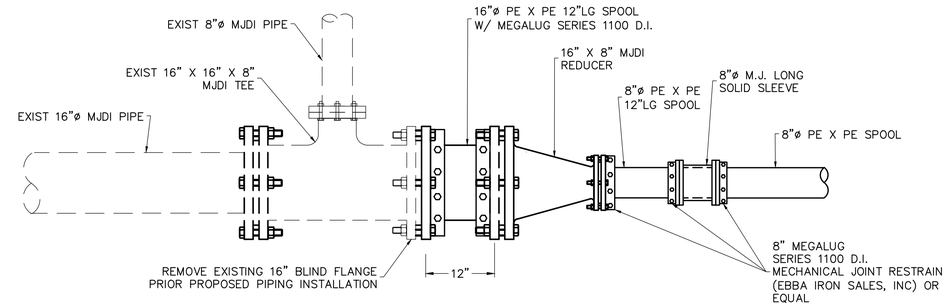

DETAIL 2
N.T.S.

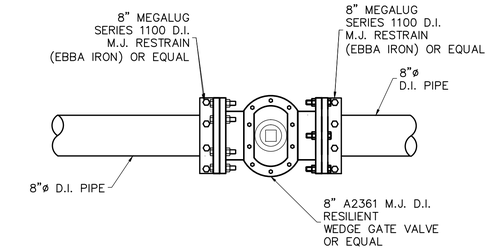

DETAIL 5 - PLAN
N.T.S.

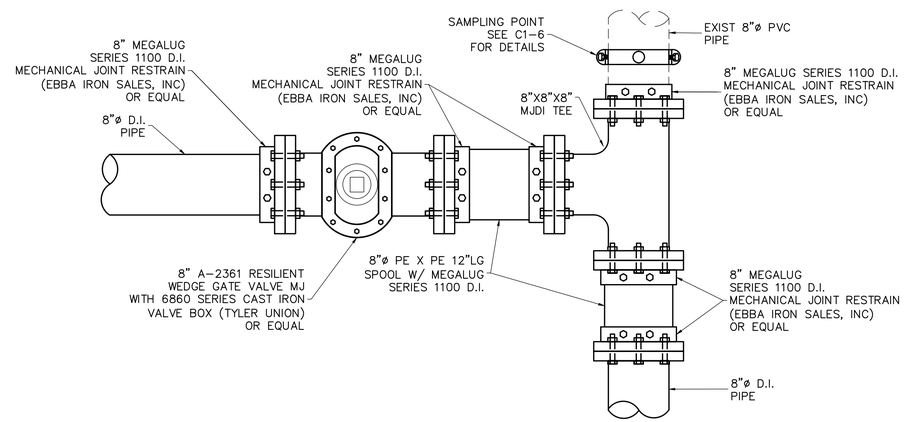

DETAIL 3
N.T.S.

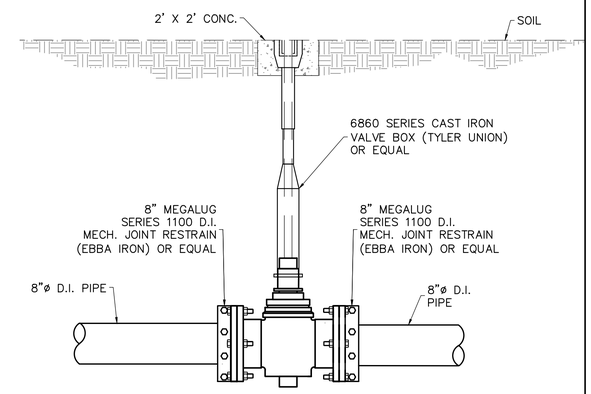

DETAIL 5 - SECTION
N.T.S.

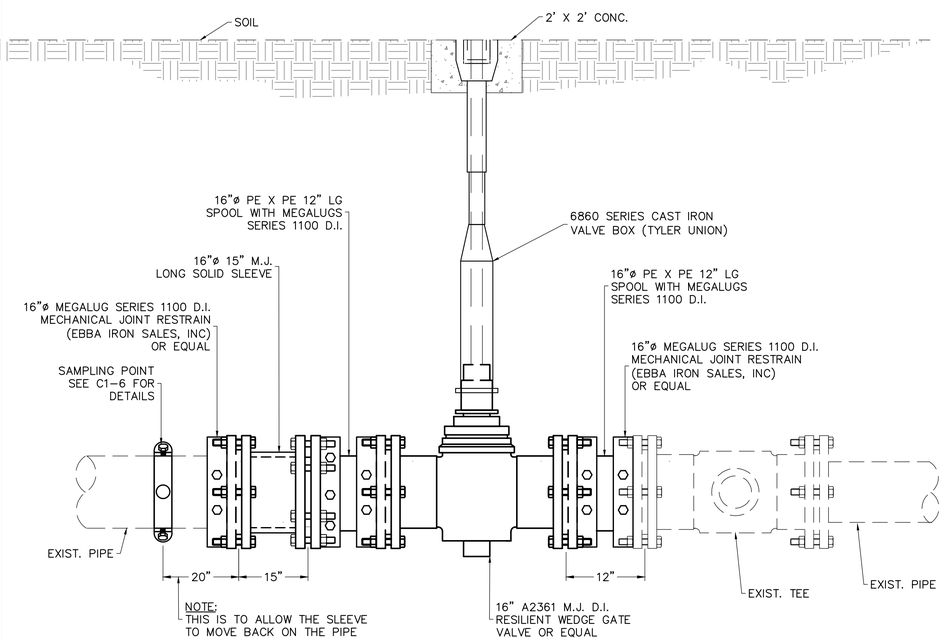

DETAIL 1 - SECTION
N.T.S.

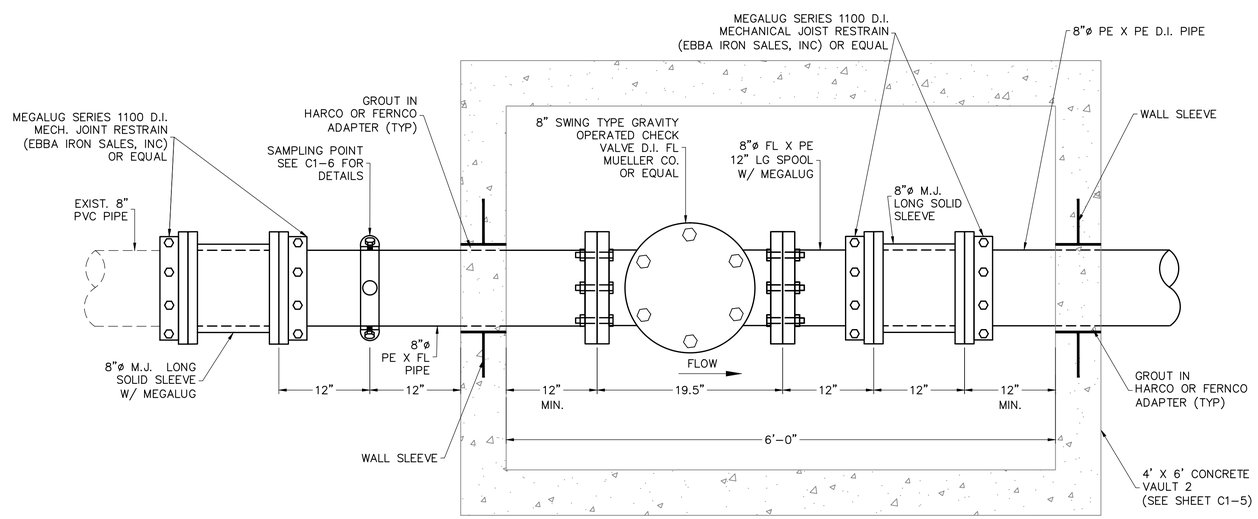

DETAIL 4 - VAULT 2
N.T.S.

URS
7800 CONGRESS AVENUE, SUITE 200
BOCA RATON, FLORIDA 33487 -1350
PHONE: (561) 994-6500
FAX: (561) 994-6524
CERT. OF AUTHORIZATION NO. 0002

DATE:_____

ENGINEER OF RECORD:
ANA C. DEMELO, P.E.
FL. REG. NUMBER: 57420

#	Date	Revision Description

CITY OF LAKE WORTH
N. BOOSTER PUMP STATION AND
ELEVATED TANK PIPING MODIFICATION
PALM BEACH COUNTY, FLORIDA

PIPING DETAILS 2 OF 2

DWN: CDS	DSN: HDB
CHK: FN	SCALE: AS SHOWN
APV: ACD	DATE: 1/20/16

SHEET
C1-4

C:\Users\maria_valiejos\appdata\local\temp\AcPublish_3348\ C1-4.dwg Feb 26, 2016 - 2:21pm

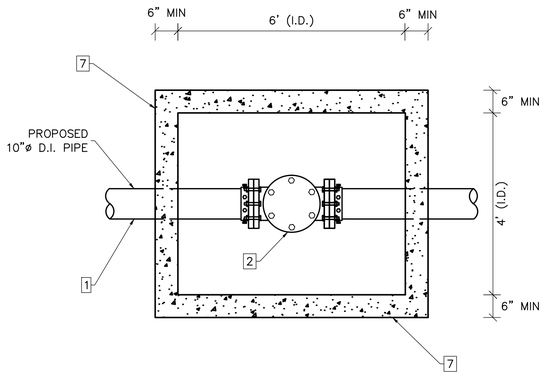

VAULT 1 PLAN
N.T.S.

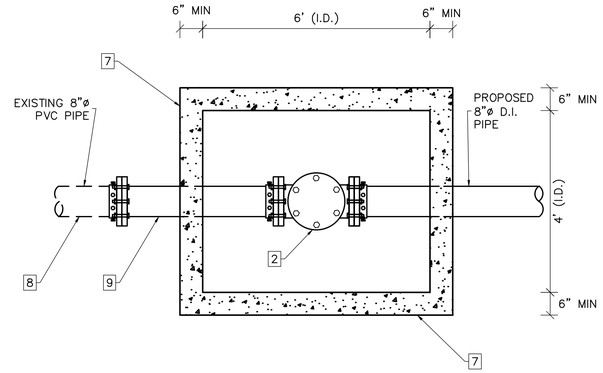

VAULT 2 PLAN
N.T.S.

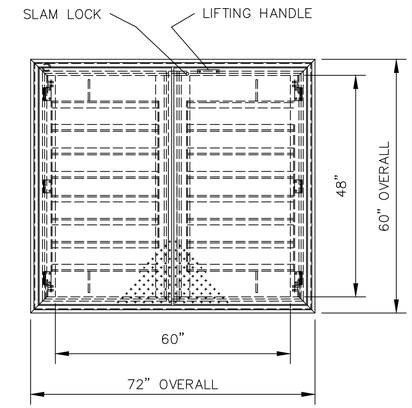

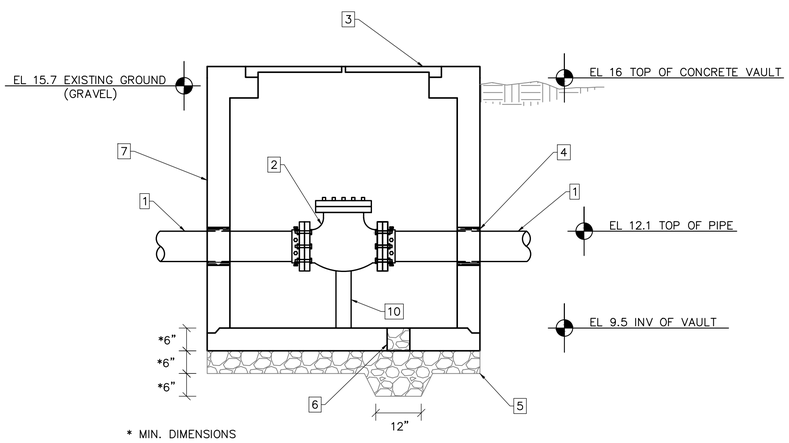

VAULT 1 ELEVATION
N.T.S.

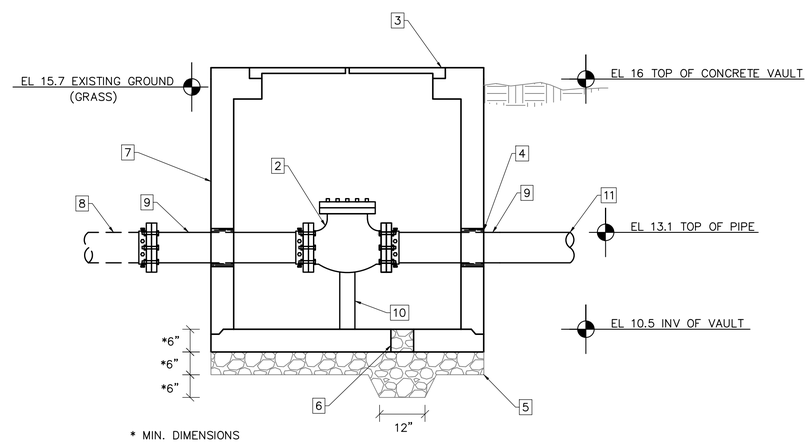

VAULT 2 ELEVATION
N.T.S.

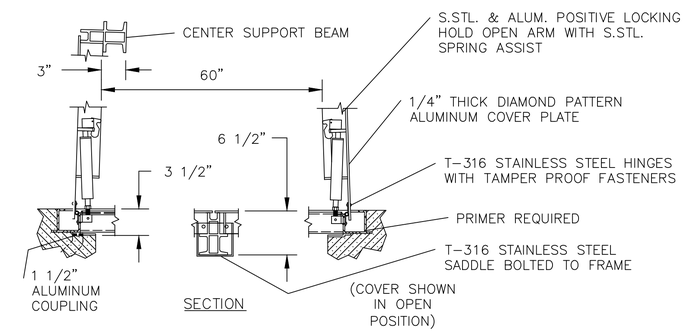

5' X 4' ACCESS DOOR DETAIL
N.T.S.

KEY NOTES:

1. PROPOSED 10" DUCTILE IRON PIPE.
2. CHECK VALVE.
3. 5 FT X 4 FT ACCESS DOOR – HALLIDAY HATCH H266048 INSTALL PER MANUFACTURES RECOMMENDATIONS.
4. PIPE PENETRATIONS SEALED WITH FLEXIBLE CONNECTORS (HARCO OR FERNCO ADAPTER).
5. 6" (MIN) #57 WASHED STONE WRAPPED WITH NON-WOVEN FILTER FABRIC.
6. 6" ø DRAIN FILL WITH #57 WASHED STONE.
7. PRECAST REINFORCED CONCRETE VAULT – 5 FT X 4 FT. I.D. SEE DETAILS FOR DEPTH. SEE NOTES BELOW FOR ADDITIONAL DESIGN INFORMATION .
8. EXISTING 8" PVC PIPE.
9. PROPOSED 8" DUCTILE IRON PIPE.
10. PIPE/VALVE CONCRETE SUPPORT. SEE NOTES BELOW FOR ADDITIONAL DESIGN INFORMATION.
11. PROPOSED 8" DUCTITE IRON PIPE.

GENERAL NOTES:

A. VAULT SHALL BE SIZED FOR ENOUGH CLEARANCE AND SHALL PROVIDE VALVE/PIPE STRUCTURAL SUPPORT AS SHOWN. VAULT SHALL BE RATED FOR FDOT HS-20 LOADING, CONTRACTOR SHALL SUBMIT SHOP DRAWINGS OF VAULT DESIGN FOR REVIEW. SHOP DRAWING SHALL BE SIGNED AND SEALED BY P.E.
B. ALL CONCRETE SHALL BE MINIMUM 4000 PSI COMPRESSIVE STRENGTH.
C. DESIGN SHALL CONFORM TO ASTM C858 – SPECIFICATIONS FOR "UNDERGROUND PRECAST CONCRETE UTILITY STRUCTURE".
D. STEEL REINFORCING DESIGN SHALL CONFORM TO ASTM C857.
E. REBARS SHALL BE GRADE 60 PER ASTM A615.
F. DIAGONAL REINFORCING SHALL BE ADDED AT ALL OPENINGS.
G. ALL JOINTS SHALL BE MADE WATERTIGHT USING 2 RINGS OF BUTYL RUBBER JOINT MASTIC.

URS
7800 CONGRESS AVENUE, SUITE 200
BOCA RATON, FLORIDA 33487 -1350
PHONE: (561) 994-6500
FAX: (561) 994-6524
CERT. OF AUTHORIZATION NO. 0002

DATE:_____

ENGINEER OF RECORD:
ANA C. DEMELO, P.E.
FL. REG. NUMBER: 57420

#	Date	Revision Description

CITY OF LAKE WORTH
N. BOOSTER PUMP STATION AND
ELEVATED TANK PIPING MODIFICATION
PALM BEACH COUNTY, FLORIDA

VAULT DETAILS	
DWN: CDS	DSN: RH
CHK: FN	SCALE: AS SHOWN
APV: ACD	DATE: 1/20/16

SHEET
C1-5

Z:\60440020 – CLW N. BOOSTER PUMP & ELEV. TANK\BID SET REVISED\CAD\ C1-5.dwg Feb 26, 2016 – 2:02pm

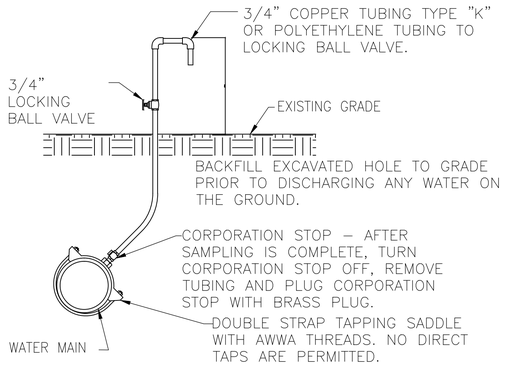

SAMPLING POINT

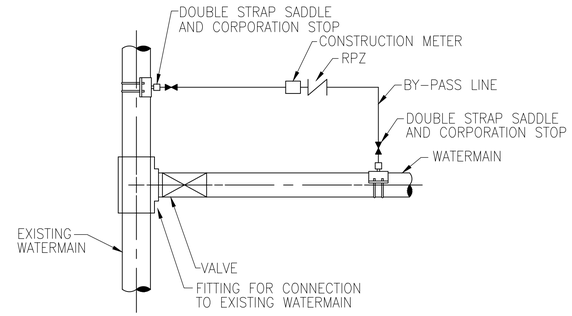

NOTES:

1. PERFORM PRESSURE AND LEAKAGE TEST ON TAPPING SLEEVE AND TAPPING VALVE (WHEN USED) PRIOR TO MAKING TAP.
2. ALL WATER FOR FLUSHING, PRESSURE AND LEAKAGE TESTS, AND BACTERIOLOGICAL CLEARANCE MUST BE FROM THE "BY–PASS" LINE WITH CHECK VALVE IN PLACE.
3. DURING ALL PRESSURE AND LEAKAGE TESTS, BOTH CORPORATION STOPS ON THE "BY–PASS" LINE MUST BE CLOSED.
4. THE UTILITY COMPANY SUPPLYING THE WATER SHALL BE NOTIFIED BEFORE FILLING AND FLUSHING. ONLY THE UTILITY COMPANY SHALL OPERATE THE VALVES.
5. DOUBLE STRAP SADDLES ARE NOT REQUIRED WHEN CONNECTING TO DUCTILE IRON PIPE.
6. CONNECT PRESSURE TEST PUMP TO SERVICE LINE OR BLOWOFF. NO EXTRA TAPS ARE PERMITTED UNLESS NEITHER A SERVICE LINE OR BLOWOFF ARE PRESENT IN THE TEST SECTION.
7. WATERMAIN VALVES CANNOT BE OPENED UNTIL THE ENTIRE SYSTEM HAS BEEN CLEARED BY THE GOVERNING PERMITTING AGENCY.
8. REMOVE THE "BY–PASS" LINE AFTER THE MAIN HAS BEEN CLEARED. PLUG CORPORATION STOP WITH THREADED BRASS PLUG.
9. INSTALL ADJUSTABLE CAST IRON VALVE BOX ON THE VALVE.

DOUBLE VALVE CONNECTION

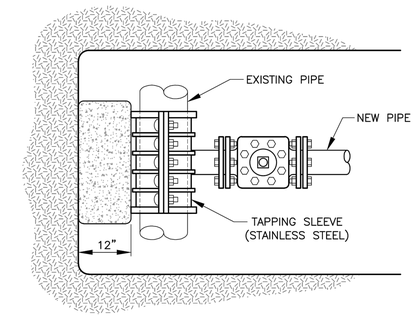

PLAN VIEW

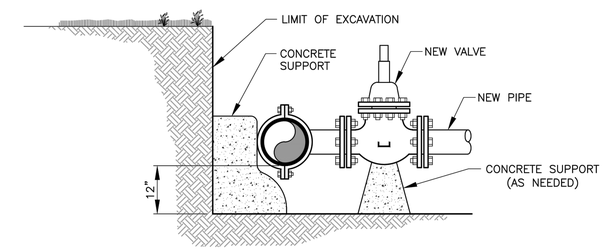

SECTION

NOTES:

1. 18" CLEARANCE FROM FITTINGS & BELLS.
2. TAPPING VALVE & SLEEVE SHALL BE PRESSURE TESTED AT 150 PSI PRIOR TO BEING TAPPED.

TAPPING SLEEVE AND VALVE INSTALLATION

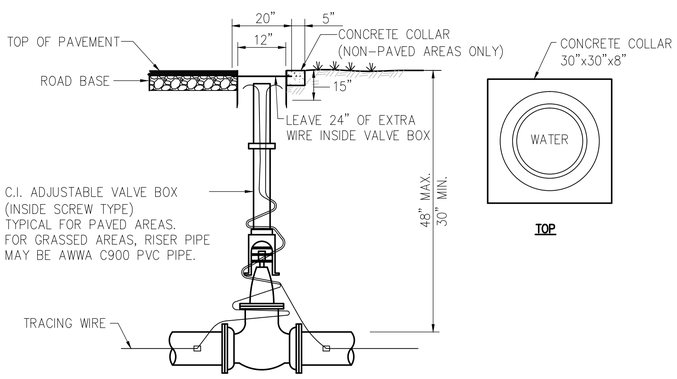

NOTES:

1. TOP OF LID MUST BE FLUSH WITH PAVEMENT OR CONCRETE COLLAR.
2. WHEN VALVE IS DEEPER THAN 36" AN EXTENSION WILL BE REQUIRED TO BRING OPERATING NUT TO 24" OF FINISHED GRADE. EXTENSION MUST BE SET SCREW TYPE AND ATTACHED TO OPERATING NUT.
3. OUTSIDE BOX SHALL BE UNITED STATES FOUNDRY NO. 7630 WITH TYPE FD LID. LID SHALL BE CAST WITH THE WORDS: "WATER" OR "RAW WATER".
4. USE NYLON CABLE TIES TO SECURE TRACE WIRE TO OUTSIDE OF VALVE EXTENSION AND CABLE TIE BEHIND EACH BELL.
5. SEE NOTES ON DETAIL NO. 3, THIS SHEET.

VALVE SETTING

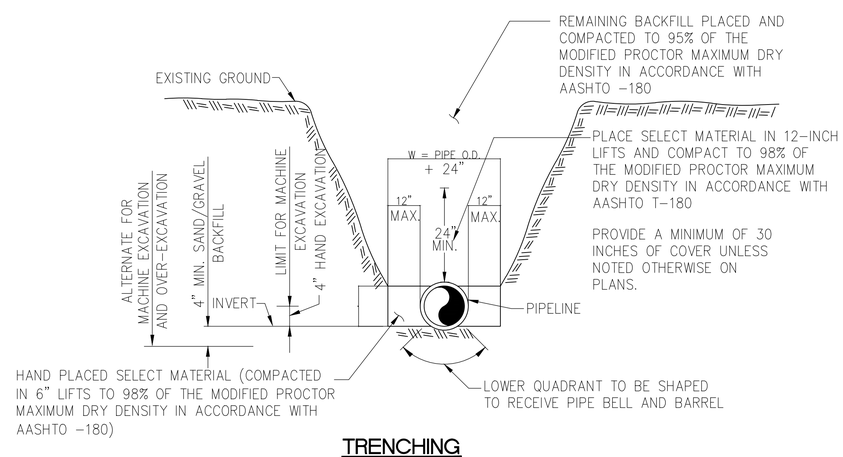

TRENCHING

URS
7800 CONGRESS AVENUE, SUITE 200
BOCA RATON, FLORIDA 33487 -1350
PHONE: (561) 994-6500
FAX: (561) 994-6524
CERT. OF AUTHORIZATION NO. 0002

DATE:_____

ENGINEER OF RECORD:
ANA C. DEMELO, P.E.
FL. REG. NUMBER: 57420

#	Date	Revision Description

CITY OF LAKE WORTH
N. BOOSTER PUMP STATION AND ELEVATED TANK PIPING MODIFICATION
PALM BEACH COUNTY, FLORIDA

WATER DISTRIBUTION DETAILS

DWN: CDS	DSN: RH
CHK: FN	SCALE: AS SHOWN
APV: ACD	DATE: 1/20/16

SHEET
C1-6

Z:\60440020 – CLW N. BOOSTER PUMP & ELEV. TANK\BID SET REVISED\CAD\ C1-6.dwg Feb 26, 2016 – 2:02pm