SHEET NO.
C-1

NEW SANITARY SEWER INSTALLATION & WATER MAIN REPLACEMENT FROM 10TH TO 12TH AVE. SOUTH IN ALLEY BETWEEN B & C ST.

BID DRAWING SET IFB #16-118

CITY OF LAKE WORTH
PALM BEACH COUNTY, FLORIDA

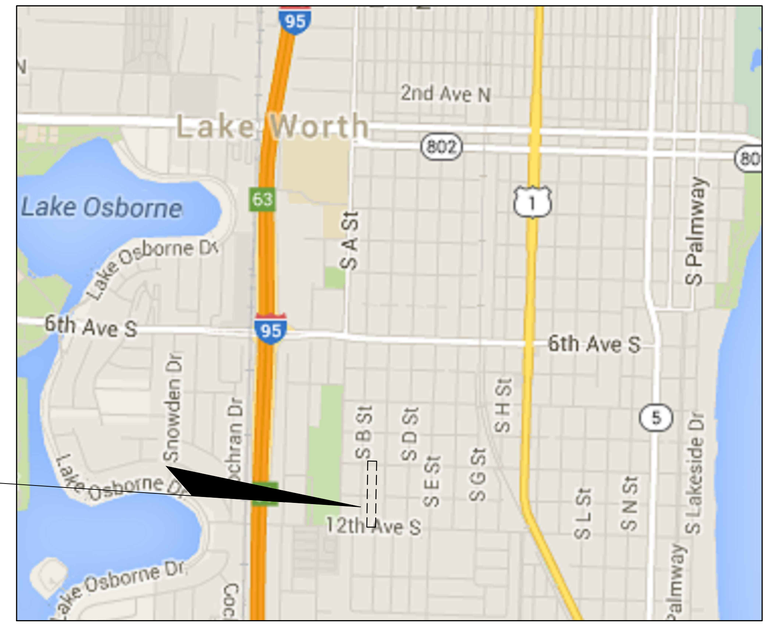

PROJECT LOCATION

LOCATION MAP

SECTION 28, TOWNSHIP 44, RANGE 43

SHEET INDEX

SHEET NO.	DESCRIPTION	REV
C-1	COVER SHEET	
C-2	GENERAL NOTES & SPECIFICATIONS	
C-3	WATER & SEWER PLAN	
C-4	WATER & SEWER PROFILE	
C-5	WATER DETAILS	
C-6	WATER DETAILS	
C-7	SANITARY SEWER DETAILS	
C-8	SANITARY SEWER DETAILS	
C-9	LIFT STATION DETAIL	
C-10	PAVING & GRADING DETAILS & SECTIONS	
V-1 & V-2	TOPOGRAPHIC SURVEY	

REV. #	DESCRIPTION	DATE
1	COVER SHEET	

WATER UTILITIES DIRECTOR:
BRIAN SHIELDS, P.E.

ASSISTANT UTILITIES DIRECTOR:
JULIE PARHAM, P.E.

CITY OF LAKE WORTH

CITY COMMISSION

PAM TRIOLO, MAYOR
SCOTT MAXWELL, VICE MAYOR
CHRISTOPHER McVOY
ANDY AMOROSO
RYAN MAIER

CRAVEN • THOMPSON AND ASSOCIATES, INC.
ENGINEERS • PLANNERS • SURVEYORS
3563 N.W. 53RD STREET, FORT LAUDERDALE, FLORIDA 33309
FAX: (954) 739-6409 TEL.: (954) 739-6400
FLORIDA LICENSED ENGINEERING, SURVEYING & MAPPING BUSINESS No. 271
FLORIDA LICENSED LANDSCAPE ARCHITECTURE BUSINESS No. C000114

MATERIAL SHOWN HEREON IS THE PROPERTY OF CRAVEN THOMPSON & ASSOCIATES, INC. AND SHALL NOT BE REPRODUCED IN WHOLE OR IN PART WITHOUT PERMISSION OF CRAVEN THOMPSON & ASSOCIATES, INC. WRITING CRAVEN THOMPSON & ASSOCIATES, INC. COPYRIGHT © 2015

Always call 811 two full business days before you dig
Sunshine811.com

VERTICAL INFORMATION HEREON IS RELATIVE TO THE NORTH AMERICAN VERTICAL DATUM (NAVD88).

Matthew J. Cigale
Florida P.E. No. 74584

FINANCIAL PROJECT NO. LS 1609
TASK ORDER NO. 6
CTA PROJECT NUMBER:15-0006-001-04

I. APPLICABLE CODES

A. ALL CONSTRUCTION AND MATERIALS SHALL CONFORM TO THE STANDARDS AND SPECIFICATIONS OF CITY OF LAKE WORTH UTILITY DEPARTMENT & ALL OTHER LOCAL, STATE AND NATIONAL CODES WHERE APPLICABLE.

B. ALL CONSTRUCTION SHALL BE DONE IN A SAFE MANNER AND IN STRICT COMPLIANCE WITH ALL THE REQUIREMENTS OF THE FEDERAL OCCUPATIONAL SAFETY AND HEALTH ACT OF 1970, AND ALL STATE AND LOCAL SAFETY AND HEALTH REGULATIONS.

C. ALL ELEVATIONS SHOWN ON THE CONSTRUCTION DRAWINGS ARE BASED ON THE NORTH AMERICAN VERTICAL DATUM OF 1988 (N.A.V.D.).

D. WITHIN THE CITY OF LAKE WORTH JURISDICTIONAL RIGHT-OF-WAY, ALL MATERIALS AND CONSTRUCTION SHALL CONFORM WITH CITY OF LAKE WORTH PUBLIC SERVICES DEPARTMENT & UTILITY DEPARTMENT "MINIMUM STANDARDS" REQUIREMENTS.

E. TRENCH SAFETY ACT

1. ALL TRENCH EXCAVATION SHALL BE PERFORMED IN ACCORDANCE WITH CHAPTER 90-96 OF THE LAWS OF FLORIDA (THE TRENCH SAFETY ACT).
2. ALL TRENCH EXCAVATION IN EXCESS OF 5 FEET IN DEPTH SHALL BE UNDERTAKEN IN ACCORDANCE WITH O.S.H.A. STANDARD 29 CFR. SECTION 1926.650 SUBPART P.
3. A TRENCH SAFETY SYSTEM, IF REQUIRED, SHALL BE DESIGNED BY THE CONTRACTOR.

F. ASBESTOS CEMENT PIPE (ACP), AND TRANSITE PIPE, CONTAIN ASBESTOS MATERIAL. ALL ASBESTOS CONTAINING MATERIALS SHALL BE HANDLED AND DISPOSED OF IN ACCORDANCE WITH THE CURRENT LOCAL, STATE AND FEDERAL REGULATIONS. THIS INCLUDES THE CUTTING, PLUGGING AND DISPOSAL OF EXISTING ACP OR TRANSITE WATER MAIN PIPES.

G. ALL HANDICAP ACCESSIBLE AREAS TO CONFORM WITH THE REQUIREMENTS OF THE AMERICANS WITH DISABILITIES ACT, LATEST EDITION.

H. IN THE EVENT OF A CONFLICT BETWEEN THE CONTRACT DOCUMENTS AND THE REQUIREMENTS OF ANY JURISDICTIONAL AUTHORITIES, THE MORE STRINGENT REQUIREMENT SHALL APPLY.

II. PRECONSTRUCTION RESPONSIBILITIES

A. FOR WORK WITHIN CITY OF LAKE WORTH JURISDICTIONAL RIGHT-OF-WAY, PLAN APPROVAL, CITY COMMISSION APPROVAL AND PERMIT ISSUANCE ARE REQUIRED PRIOR TO SCHEDULING PRE-CONSTRUCTION CONFERENCE.

B. UPON THE RECEIPT OF THE "NOTICE TO PROCEED", THE CONTRACTOR SHALL CONTACT THE ENGINEER OF RECORD AND ARRANGE A PRECONSTRUCTION CONFERENCE TO INCLUDE ALL INVOLVED GOVERNMENTAL AGENCIES, UTILITY OWNERS AND THE ENGINEER OF RECORD.

C. THE CONTRACTOR SHALL OBTAIN A SUNSHINE STATE ONE CALL CERTIFICATION NUMBER AND FIELD MARKINGS AT LEAST 48 HOURS PRIOR TO BEGINNING ANY EXCAVATION, CALL 811.

D. LOCATION OF EXISTING FACILITIES AS SHOWN ON CONSTRUCTION DRAWINGS ARE DRAWN FROM AVAILABLE RECORDS. THE ENGINEER ASSUMES NO RESPONSIBILITY FOR THE ACCURACY OF THE EXISTING FACILITIES SHOWN OR FOR ANY EXISTING FACILITY NOT SHOWN. THE CONTRACTOR SHALL VERIFY THROUGH VACUUM EXCAVATION & TEST HOLE METHODS, THE ELEVATIONS AND LOCATIONS OF EXISTING FACILITIES PRIOR TO CONSTRUCTION. IF AN EXISTING FACILITY IS FOUND TO CONFLICT WITH THE PROPOSED CONSTRUCTION UPON EXCAVATION, THE CONTRACTOR SHALL IMMEDIATELY NOTIFY THE ENGINEER OF RECORD SO THAT APPROPRIATE MEASURES CAN BE TAKEN TO RESOLVE THE ISSUE.

E. THE CONTRACTOR SHALL COORDINATE W/ OTHER UTILITY OWNERS TO LOCATE, IDENTIFY OR RELOCATE EXISTING UTILITIES AS REQUIRED. NO ADDITIONAL PAYMENT SHALL BE MADE FOR THIS WORK. IT SHALL BE CONSIDERED INCIDENTAL TO THE PROJECT.

F. FOR STREET EXCAVATION OR CLOSING OR FOR ALTERATION OF ACCESS TO PUBLIC OR PRIVATE PROPERTY, INFORM:
1. LOCAL POLICE TRAFFIC SERGEANT
2. LOCAL FIRE DEPARTMENT DISPATCH
3. LAKE WORTH PUBLIC SERVICES DEPARTMENT

G. THE CONTRACTOR SHALL USE EXTREME CAUTION WORKING UNDER, OVER AND AROUND EXISTING ELECTRIC LINES. THE CONTRACTOR SHALL CONTACT THE CITY OF LAKE WORTH ELECTRIC UTILITY DEPARTMENT TO VERIFY LOCATIONS, VOLTAGE AND REQUIRED CLEARANCES, ONSITE, IN RIGHT-OF-WAYS AND IN EASEMENTS, PRIOR TO ANY CONSTRUCTION IN THE VICINITY OF EXISTING LINES.

H. ALL UTILITY / ACCESS EASEMENTS TO BE SECURED PRIOR TO CONSTRUCTION.

I. NO CONSTRUCTION MAY COMMENCE UNTIL THE APPROPRIATE PERMITS HAVE BEEN OBTAINED FROM ALL LOCAL, STATE, AND FEDERAL AGENCIES.

J. ALL REQUIRED GOVERNMENTAL AGENCY BUILDING AND RIGHT OF WAY PERMITS TO BE OBTAINED BY THE CONTRACTOR PRIOR TO ANY CONSTRUCTION ACTIVITY.

K. CONTRACTOR TO COORDINATE CONSTRUCTION SCHEDULING FOR CONNECTION TO THE EXISTING WATER AND SEWER LINES WITH THE CITY OF LAKE WORTH WATER UTILITY DEPARTMENT.

L. NO CONNECTIONS TO EXISTING LINES SHALL BE MADE UNTIL APPLICABLE TESTS HAVE BEEN PERFORMED AND PASSED AND THE SYSTEM IS APPROVED BY APPLICABLE REGULATORY AGENCIES, INCLUDING THE PALM BEACH COUNTY HEALTH DEPARTMENT.

III. INSPECTIONS

A. THE CONTRACTOR SHALL NOTIFY THE CITY OF LAKE WORTH PUBLIC SERVICES & UTILITY DEPARTMENT, THE ENGINEER OF RECORD, AND ANY OTHER GOVERNMENTAL AGENCIES HAVING JURISDICTION AT LEAST 48 HOURS PRIOR TO BEGINNING CONSTRUCTION AND 24 HOUR ADVANCED NOTIFICATION PRIOR TO THE INSPECTION OF THE FOLLOWING ITEMS, WHERE APPLICABLE:

1. CLEARING AND FILLING
2. STORM DRAINAGE SYSTEM (INSTALLATION & TESTING)
3. WATER DISTRIBUTION SYSTEM (INSTALLATION & TESTING)
4. SEWER COLLECTION SYSTEM (INSTALLATION & TESTING)
5. SUBGRADE
6. LIMEROCK BASE
7. ASPHALTIC CONCRETE
8. SIDEWALK
9. LANDSCAPING
10. FINAL

IV. SHOP DRAWINGS

A. PRIOR TO THEIR CONSTRUCTION OR INSTALLATION, SHOP DRAWINGS SHALL BE SUBMITTED TO AND APPROVED BY THE ENGINEER OF RECORD FOR THE FOLLOWING: LIFT/ PUMP STATION EQUIPMENT, SANITARY MAINTENANCE ACCESS STRUCTURES, CATCH BASINS, FIRE HYDRANTS, VALVES, PIPE MATERIAL AND ALL REQUIRED ACCESSORIES. IT IS THE RESPONSIBILITY OF THE CONTRACTOR TO OBTAIN ALL OTHER AGENCY APPROVALS IF REQUIRED.

V. TEMPORARY FACILITIES

A. GENERAL:

IT SHALL BE THE CONTRACTOR'S RESPONSIBILITY TO ARRANGE FOR OR SUPPLY TEMPORARY WATER SERVICE, SANITARY FACILITIES AND ELECTRICITY.

B. TRAFFIC REGULATION:

1. MAINTENANCE OF TRAFFIC IN THE PUBLIC RIGHT-OF-WAY SHALL BE IN ACCORDANCE WITH THE MANUAL ON UNIFORM TRAFFIC CONTROL DEVICES (M.U.T.C.D.). CONTRACTOR IS RESPONSIBLE TO PREPARE AND PROCESS A MAINTENANCE OF TRAFFIC PLAN AND OBTAIN APPROVAL FROM CITY OF LAKE WORTH PUBLIC SERVICES & UTILITY DEPARTMENT AND PALM BEACH COUNTY TRAFFIC ENGINEERING AND FDOT WHERE APPLICABLE PRIOR TO THE START OF CONSTRUCTION.
2. ALL OPEN TRENCHES AND HOLES ADJACENT TO ROADWAYS OR WALKWAYS SHALL BE PROPERLY MARKED AND BARRICADED TO ASSURE THE SAFETY OF BOTH VEHICULAR AND PEDESTRIAN TRAFFIC.
3. NO TRENCHES OR HOLES NEAR WALKWAYS, IN ROADWAYS OR THEIR SHOULDERS ARE TO BE LEFT OPEN DURING NIGHTTIME HOURS, UNLESS IN ACCORDANCE WITH METHODS APPROVED BY THE ENGINEER OF RECORD AND THE CITY OF LAKE WORTH PUBLIC SERVICES & UTILITY DEPARTMENT.
4. THE SAFE WALK ROUTE FOR ALL SCHOOLS WITHIN THE VICINITY OF THE CONSTRUCTION ZONE SHALL BE MAINTAINED DURING THE ARRIVAL AND DISMISSAL OF SCHOOL.
5. IT SHALL BE THE RESPONSIBILITY OF THE GENERAL CONTRACTOR FOR ANY NECESSARY CONSTRUCTION, PAVEMENT MARKING AND SIGNAGE OR ANY PEDESTRIAN SIGNALIZATION AND/OR SIGNAL MODIFICATION TO ACCOMMODATE AN ALTERNATE SAFE WALK ROUTE.
6. IT SHALL BE THE CONTRACTORS RESPONSIBILITY TO MAINTAIN ALL TRAFFIC CONTROL DEVICES DURING CONSTRUCTION. ANY DEVICE DAMAGED DURING CONSTRUCTION SHALL BE PROPERLY RESTORED AT THE CONTRACTORS EXPENSE. ALL TRAFFIC CONTROL DEVICES SHALL BE RESTORED IN ACCORDANCE WITH CITY OF LAKE WORTH PUBLIC SERVICES & UTILITY DEPARTMENT STANDARDS.

VI. GRAVITY SEWER COLLECTION SYSTEM

A. GENERAL:

1. EXISTING MANHOLE RIM ELEVATIONS AS SHOWN ON PLANS SHALL BE ADJUSTED TO CONFIRM TO PROPOSED GRADES.
2. DISTANCE AND LENGTHS SHOWN ON PLANS AND PROFILE DRAWINGS ARE REFERENCED TO THE CENTER OF STRUCTURES

B. MATERIALS

1. ALL P.V.C. SEWER PIPE AND FITTINGS SHALLOWER THAN 12' SHALL BE NON-PRESSURE POLYVINYL CHLORIDE (P.V.C.) PIPE CONFORMING TO ASTM D 3034, SDR 26, WITH PUSH-ON RUBBER GASKET JOINTS. ALL P.V.C. GRAVITY SEWER PIPE DEEPER THAN 12' SHALL BE C900 P.V.C. AND SHALL CONFORM TO ANSI/AWWA STANDARD C900-07 OR LATEST REVISION. C900 P.V.C. SHALL BE MADE FROM CLASS 12454-A OR CLASS 12454-B VIRGIN MATERIAL AND CONFORM WITH THE OUTSIDE DIAMETER OF CAST IRON PIPE WITH A MINIMUM WALL THICKNESS OF DR SERIES 18. ULTRA VIOLET DEGRADATION OR SUN BLEACHED PIPE WILL BE CAUSE FOR REJECTION.
2. MANHOLES SHALL BE PRECAST REINFORCED CONCRETE PER ASTM C478 WITH 4,000 PSI CONCRETE, TYPE II CEMENT, 8" MINIMUM WALL THICKNESS, AND GRADE 60 STEEL. THE PRECAST REINFORCED BASE SHALL BE MINIMUM OF 8" THICK AND BE CAST MONOLITHICALLY WITH THE BOTTOM SECTIONS WALLS.
3. MANHOLES ARE TO BE SEALED WITH TYPE II SULPHATE RESISTANT CEMENT OR APPROVED EQUAL - NO MOLDING PLASTER.
4. JOINTS FOR P.V.C. NON-PRESSURE PIPE AND FITTINGS SHALL BE BELL AND SPIGOT PUSH-ON RUBBER GASKET TYPE ONLY. NO SOLVENT WELD OR THREADED JOINTS WILL BE PERMITTED.
5. P.V.C. CLEAN-OUTS SHALL HAVE MALE THREADED ACCESS PLUGS WITH RAISED 2-INCH SQUARE OPERATING NUTS. LONG RADIUS WYE CONNECTIONS AND FITTINGS SHALL BE USED IN ORDER TO ACCESS CLEAN-OUT OPERATIONS.

C. INSTALLATION:

1. P.V.C. SEWER PIPE SHALL BE LAID IACCORDANCE WITH ASTM D 2321 AND THE UNI-BELL PLASTIC PIPE ASSOCIATION'S "RECOMMENDED PRACTICE FOR THE INSTALLATION OF P.V.C. SEWER PIPE".
2. MANHOLES SHALL BE SET PLUMB TO LINE AND GRADE ON FIRM SUBGRADE PROVIDING UNIFORM BEARING UNDER THE BASE AS SHOWN ON PLANS. PRECAST CONCRETE GRADE RINGS SHALL BE USED TO ADJUST RIM TO GRADE. BRICK SHALL NOT BE ALLOWED.
3. ALL OPENINGS AND JOINTS SHALL BE SEALED WATERTIGHT.
4. THE ENTIRE INSIDE AND OUTSIDE OF THE MANHOLE STRUCTURES SHALL BE PAINTED WITH TWO COATS (1ST COAT RED, 2ND COAT BLACK-8 MILS EACH) OF AGRU SUREGRIP, KERNEOS SEWERCOAT OR APPROVED EQUAL.
5. PIPE BEDDING MATERIAL SHALL CONSIST OF WELL GRADED ASTM C33 #67 ROCK (3/4" TO NO. 4), COMPACTED IN 6" MAXIMUM LAYERS TO ACHIEVE 98% OF THE MAXIMUM DENSITY PER AASTHO T-180. BEDDING MATERIAL SHALL BE PLACED MINIMUM 6" BELOW BOTTOM OF PIPE AND EXTEND TO SPRING LINE OF PIPE.
6. BACKFILL MATERIAL SHALL BE WELL GRADED GRANULAR MATERIAL, WELL TAMPED LAYERS NOT TO EXCEED 6" TO A HEIGHT 12" ABOVE PIPE. REFER TO TRENCH DETAIL WITHIN PLAN SHEETS.

D. TESTING:

1. AFTER CONSTRUCTION OF THE SEWER SYSTEM, THE ENGINEER WILL REQUIRE A LAMPING, A 2 HOUR INFILTRATION AND/OR EXFILTRATION TEST TO BE PERFORMED ON THE ENTIRE SYSTEM OR ANY PART THEREOF, AND SEWER LINES WILL BE T.V. INSPECTED AT THE EXPENSE OF THE CONTRACTOR.
2. PIPE DEFLECTION TESTING:
NO PIPE SHALL EXCEED DEFLECTION OF 5%. A RIGID BALL OR MANDREL SHALL BE USED WITH A DIAMETER NOT LESS THAN 95% OF THE BASE INSIDE DIAMETER OR AVERAGE INSIDE DIAMETER OF THE PIPE. TESTS SHALL BE PERFORMED WITHOUT MECHANICAL PULLING DEVICES.
3. THE ALLOWABLE LIMITS OF INFILTRATION OR EXFILTRATION FOR THE ENTIRE SYSTEM OR ANY PORTION THEREOF, SHALL NOT EXCEED A RATE OF 100 GALLONS PER INCH OF INSIDE PIPE DIAMETER PER MILE PER DAY FOR ANY SECTION TESTED. NO ADDITIONAL ALLOWANCE WILL BE MADE FOR HOUSE SERVICE LINES. NO VISIBLE LEAKAGE SHALL BE ALLOWED AND LINES WILL BE T.V. INSPECTED AT THE EXPENSE OF THE CONTRACTOR.
4. EXFILTRATION OR INFILTRATION TESTS SHALL BE PERFORMED WITH A MINIMUM POSITIVE HEAD OF 2 FEET.
5. AIR TESTS, AS A MINIMUM SHALL CONFORM TO THE TESTING PROCEDURES DESCRIBED IN ASTM F-1417 FOR PLASTIC PIPE, AND FOR OTHER MATERIALS APPROPRIATE TEST PROCEDURES.
6. THE ALLOWABLE LIMITS OF INFILTRATION OR EXFILTRATION OF MANHOLES SHALL NOT EXCEED A RATE OF FOUR GALLONS PER MANHOLE PER 24 HOURS. AIR TESTING SHALL CONFORM TO ASTM C-1244. NO VISIBLE LEAKAGE SHALL BE ALLOWED.
7. BEFORE ANY PHYSICAL CONNECTIONS ARE MADE TO THE EXISTING GRAVITY SEWERS, THE COMPLETE SYSTEM SHALL BE CLEARED BY PALM BEACH COUNTY HEALTH DEPARTMENT AND CITY OF LAKE WORTH UTILITIES, AND THE ENGINEER OF RECORD.

VII. WATER DISTRIBUTION AND OR SEWAGE FORCE MAIN SYSTEM:

A. SEPARATION OF WATER AND SEWER MAINS:

FOR THE PURPOSE OF THIS SECTION, THE PHRASE "WATER MAINS" SHALL MEAN MAINS, INCLUDING TREATMENT PLANT PROCESS PIPING, CONVEYING EITHER RAW, PARTIALLY TREATED, OR FINISHED DRINKING WATER; FIRE HYDRANT LEADS; AND SERVICE LINES THAT ARE UNDER THE CONTROL OF A PUBLIC WATER SYSTEM AND THAT HAVE AN INSIDE DIAMETER OF THREE INCHES OR GREATER.

HORIZONTAL SEPARATION BETWEEN UNDERGROUND WATERMAINS AND SANITARY OR STORM SEWERS, WASTEWATER OR STORMWATER FORCE MAINS, RECLAIMED WATER PIPELINES AND ON SITE SEWAGE TREATMENT AND DISPOSAL SYSTEMS.

1. NEW OR RELOCATED UNDERGROUND WATERMAINS SHALL BE LAID TO PROVIDE A HORIZONTAL DISTANCE OF AT LEAST THREE FEET BETWEEN THE OUTSIDE OF THE WATERMAIN AND THE OUTSIDE OF ANY EXISTING OR PROPOSED SEWER, STORMWATER FORCEMAIN, OR PIPELINE CONVEYING RECLAIMED WATER REGULATED UNDER PART III OF CHAPTER 2-610, F.A.C.
2. NEW OR RELOCATED UNDERGROUND WATERMAINS SHALL BE LAID TO PROVIDE A HORIZONTAL DISTANCE OF AT LEAST THREE FEET, AND PREFERABLY TEN FEET, BETWEEN THE OUTSIDE OF THE WATERMAIN AND THE OUTSIDE OF ANY EXISTING OR PROPOSED VACUUM-TYPE SANITARY SEWER.
3. NEW OR RELOCATED UNDERGROUND WATERMAINS SHALL BE LAID TO PROVIDE A HORIZONTAL DISTANCE OF AT LEAST SIX, AND PREFERABLY TEN FEET, BETWEEN THE OUTSIDE OF THE WATERMAIN AND THE OUTSIDE OF ANY EXISTING OR PROPOSED GRAVITY OR PRESSURE TYPE SANITARY SEWER, WASTEWATER FORCEMAIN, OR PIPELINE CONVEYING RECLAIMED WATER NOT REGULATED UNDER PART III OF CHAPTER 62-610, F.A.C. THE MINIMUM HORIZONTAL SEPARATION BETWEEN WATERMAINS AND GRAVITY TYPE SANITARY SEWERS SHALL BE REDUCED TO THREE FEET WHERE THE BOTTOM OF THE WATERMAIN IS LAID AT LEAST SIX INCHES ABOVE THE TOP OF THE SEWER.
4. NEW OR RELOCATED UNDERGROUND WATERMAINS SHALL BE LAID TO PROVIDE A MINIMUM HORIZONTAL DISTANCE OF AT LEAST TEN FEET BETWEEN THE OUTSIDE OF THE WATERMAIN AND ALL PARTS OF ANY EXISTING OR PROPOSED 'ON SITE SEWAGE TREATMENT AND DISPOSAL SYSTEM' AS DEFINED IN SECTION 381.0065(2), F.S. AND RULE 64E-6.002, F.A.C.

VERTICAL SEPARATION BETWEEN UNDERGROUND WATERMAINS AND SANITARY OR STORM SEWERS, WASTEWATER OR STORMWATER FORCEMAINS, AND RECLAIMED WATER PIPELINES.

1. NEW OR RELOCATED UNDERGROUND WATERMAINS CROSSING ANY EXISTING OR PROPOSED GRAVITY OR VACUUM TYPE SANITARY OR STORM SEWER SHALL BE LAID SO THE OUTSIDE OF THE WATERMAIN IS AT LEAST SIX INCHES, AND PREFERABLY TWELVE INCHES ABOVE, OR AT LEAST TWELVE INCHES BELOW THE OUTSIDE OF THE OTHER PIPELINE. HOWEVER, IT IS PREFERABLE TO LAY THE WATERMAIN ABOVE THE OTHER PIPELINE.
2. NEW OR RELOCATED UNDERGROUND WATERMAINS CROSSING ANY EXISTING OR PROPOSED PRESSURE TYPE SANITARY SEWER, WASTEWATER OR STORMWATER FORCE MAIN, OR PIPE LINE CONVEYING RECLAIMED WATER SHALL BE LAID SO THE OUTSIDE OF THE WATERMAIN IS AT LEAST TWELVE INCHES ABOVE OR BELOW THE OUTSIDE OF THE OTHER PIPELINE. HOWEVER, IT IS PREFERABLE TO LAY THE WATERMAIN ABOVE THE OTHER PIPELINE.
3. AT THE UTILITY CROSSING DESCRIBED IN PARAGRAPH 1 AND 2 ABOVE, ONE FULL LENGTH OF WATER MAIN PIPE SHALL BE CENTERED ABOVE OR BELOW THE OTHER PIPELINE SO THE WATERMAIN JOINTS SHALL BE AS FAR AS POSSIBLE FROM THE OTHER PIPELINE. ALTERNATIVELY, AT SUCH CROSSINGS, THE PIPES SHALL BE ARRANGED SO THAT ALL WATERMAIN JOINTS ARE AT LEAST THREE FEET FROM ALL JOINTS IN VACUUM TYPE SANITARY SEWER, STORM SEWERS, STORMWATER FORCEMAINS, OR PIPELINES CONVEYING RECLAIMED WATER REGULATED UNDER PART III OF CHAPTER 62-610, F.A.C., AND AT LEAST SIX FEET FROM ALL JOINTS IN GRAVITY OR PRESSURE TYPE SANITARY SEWERS, WASTEWATER FORCEMAINS, OR PIPELINES CONVEYING RECLAIMED WATER NOT REGULATED UNDER PART III OF CHAPTER III 62-610, F.A.C.
4. WHERE 12" VERTICAL SEPARATION BETWEEN POTABLE WATER MAINS AND SANITARY OR STORM SEWERS CANNOT BE MAINTAINED, A 20 LINEAR FOOT SEGMENT OF DUCTILE IRON PIPE WATER MAIN WILL BE INSTALLED ON CENTER OVER THE CONFLICT.

B. MATERIALS:
PER CITY OF LAKE WORTH APPROVED PRODUCTS LIST OR AS OTHERWISE NOTED.

1. ALL WATER MAIN PIPE, INCLUDING FITTINGS, SHALL BE COLOR CODED OR MARKED BLUE AS A PREDOMINANT COLOR TO DIFFERENTIATE DRINKING WATER FROM RECLAIMED OR OTHER WATER. UNDERGROUND PLASTIC PIPE SHALL BE SOLID-WALL BLUE PIPE, SHALL HAVE A CO-EXTRUDED BLUE EXTERNAL SKIN, OR SHALL BE WHITE OR BLACK PIPE WITH BLUE STRIPES INCORPORATED INTO, OR APPLIED TO, THE PIPE WALL; AND UNDERGROUND METAL OR CONCRETE PIPE SHALL HAVE BLUE STRIPES APPLIED TO THE PIPE WALL. PIPE STRIPED DURING MANUFACTURING OF THE PIPE SHALL HAVE CONTINUOUS STRIPES THAT RUN PARALLEL TO THE AXIS OF THE PIPE, THAT ARE LOCATED AT NO GREATER THAN 90 DEGREE INTERVALS AROUND THE PIPE, AND THAT WILL REMAIN INTACT DURING AND AFTER INSTALLATION OF THE PIPE. IF TAPE OR PAINT IS USED TO STRIPE PIPE DURING INSTALLATION OF PIPE, THE TAPE OR PAINT SHALL BE APPLIED IN A CONTINUOUS LINE THAT RUNS PARALLEL TO THE AXIS OF THE PIPE AND THAT IS LOCATED ALONG THE TOP OF THE PIPE; FOR PIPES WITH AN INTERNAL DIAMETER OF 24 INCHES OR GREATER, TAPE OR PAINT SHALL BE APPLIED IN A CONTINUOUS LINES ALONG EACH SIDE OF THE PIPE, AS WELL AS ALONG THE TOP OF THE PIPE.
2. DUCTILE IRON PIPE FOR WATER DISTRIBUTION MAINS SHALL BE CLASS 52 CONFORMING TO ANSI/AWWA STANDARD C150/A21.50-08 AND C151/A21.51-09, "DUCTILE IRON PIPE CENTRIFUGALLY CAST IN METAL MOLDS OR "SAND-LINED MOLDS". DUCTILE IRON PIPE SHALL BE CEMENT LINED AND SEAL COATED IN ACCORDANCE WITH ANSI/AWWA STANDARD C104/A21.3-08. APPROVED MANUFACTURERS: AMERICAN, CLOW, US PIPE, McWAYNE, & GRIFFIN.
3. POLYVINYL CHLORIDE (PVC) PRESSURE PIPE SHALL BE C-900 (4"-12") AND C-905 (OVER 12") CONFORMING TO ANSI/AWWA STANDARD C900-07 OR LATEST REVISION. PVC PRESSURE PIPE SHALL BE CEMENT LINED AND SEAL COATED; POLYETHYLENE (PE) ENCASED. PVC PRESSURE PIPE SHALL BE MADE FROM CLASS 12454-A OR CLASS 12454-B VIRGIN MATERIAL AND CONFORM WITH A MINIMUM WALL THICKNESS OF DR SERIES 18. ULTRA VIOLET DEGRADATION OR SUN BLEACHED PIPE WILL BE CAUSE FOR REJECTION. JOINTS FOR PVC PRESSURE PIPE SHALL BE BELL AND SPIGOT PUSH ON RUBBER GASKET TYPE ONLY. NO SOLVENT WELD OR THREADED JOINTS PERMITTED.
4. ADEQUATE PROTECTIVE MEASURES AGAINST CORROSION SHALL BE USED AS DETERMINED BY THE ENGINEER.
5. DUCTILE IRON FITTINGS FOR WATER DISTRIBUTION MAINS SHALL CONFORM TO ANSI/AWWA STANDARD C153/A21.53-11. FITTINGS 4" AND LARGER SHALL BE CEMENT LINED AND SEAL COATED IN ACCORDANCE WITH ANSI/AWWA STANDARD C104/A21.3-08.
6. ALL WATER MAIN INSTALLATIONS SHALL COMPLY WITH THE REQUIREMENTS OF CHAPTER 62-555.320, FLORIDA ADMINISTRATIVE CODE.
7. JOINTS FOR BELL AND SPIGOT DUCTILE IRON PIPE AND FITTINGS SHALL CONFORM TO ANSI/AWWA STANDARD C111/A21.11-12 OR LATEST REVISION. MECHANICAL JOINT RESTRAINT SHALL BE EBAA IRON/ MEGALUG.
8. WATER DISTRIBUTION VALVES SHALL BE GATE VALVES (4"-16") CONFORMING TO ANSI/AWWA C509-09 OR LATEST REVISION. THEY SHALL BE RESILIENT SEAT AND BI-DIRECTIONAL FLOW ONLY. MAXIMUM WORKING PRESSURE OF 200 PSI AND TESTED AT 400 PSI. GATE VALVES SHALL BE MUELLER, AMERICAN DARLING OR CLOW.
9. TAPPING VALVES SHALL BE RESILIENT WEDGE TYPE AND MANUFACTURED BY MUELLER, AMERICAN DARLING, OR CLOW.
10. TAPPING SLEEVES SHALL BE MUELLER H-615 (4"-24"), MUELLER H-616(10"-24"), OR AMERICAN DARLING 2800C (4"-12" AND 16").
11. TAPPING CROSS SHALL BE MUELLER H-715.
12. BACK FLOW PREVENTOR SHALLED BE WATTS MODEL 009, FEBCO 805Y-BV OR APPROVED EQUAL.
13. FIRE HYDRANTS SHALL BE MUELLER SUPER CENTURION A-423, 5 1/4" PLUGGED DRAIN OR AMERICAN DARLING 5 1/4" B-84-B-5. PUMPER NOZZLE TO BE 18" MIN. AND 24" MAX. FROM FINISHED GRADE. ALL HYDRANTS SHALL HAVE A TOP COAT OF TNEMEC SERIES 66 YELLOW.
14. WATER VALVE BOXES WITHIN PAVED AREAS SHALL BE CAST IRON ADJUSTABLE VALVE BOX (INSIDE SCREW TYPE). VALVE BOXES WITHIN GRASSED AREAS, RISER PIPE MAY BE AWWA C900 PIPE. OUTSIDE BOX AND COVER SHALL BE UNITED STATES FOUNDARY NO. 7630 WITH FD LID MARKED "WATER". 30"x30"x8" CONCRETE COLLAR INSTALLED WITHIN NON-PAVED AREAS ONLY.
15. FORCE MAIN SHALL BE PVC (SCHEDULE 80) AND GREEN IN COLOR SO IT CAN NOT BE CONFUSED WITH POTABLE WATER MAIN.
16. SEWAGE FORCE MAIN VALVES SHALL BE PLUG VALVES WHICH SHALL BE OF THE NON-LUBRICATED, ECCENTRIC TYPE WITH RESILIENT FACED PLUGS, PORT AREAS FOR VALVES 20 INCHES AND SMALLER SHALL BE AT LEAST 80% OF FULL PIPE AREA. PORT AREA OF VALVES 24 INCHES AND LARGER SHALL BE AT LEAST 70% OF FULL PIPE AREA. THE BODY SHALL BE OF SEMI-STEEL (ASTM A-126 C1.B) AND SHALL HAVE BOLTED BONNET WHICH GIVES ACCESS TO THE INTERVALS OF THE VALVE. SEATS SHALL BE WELDED OVERLAY OF HIGH NICKEL CONTENT OR A STAINLESS STEEL PLATE LOCKED IN THE BODY CAVITY. IF A PLATE IS USED, IT SHALL BE REPLACEABLE THROUGH THE BONNET ACCESS. BEARINGS SHALL BE PERMANENTLY LUBRICATED OF STAINLESS STEEL, BRONZE OR TEFLON LINED, FIBER GLASS BACKED DURALON. BEARING AREAS SHALL BE ISOLATED FROM THE FLOW WITH GRIT SEALS. VALVES SHALL HAVE PACKING BONNETS WHERE THE SHAFT PROTRUDES FROM THE VALVE AND THE PACKING SHALL BE SELF-ADJUSTING CHEVRON TYPE WHICH CAN BE REPLACED WITHOUT REMOVING THE BONNET. ALL NUTS, BOLTS, SPRINGS AND WASHERS SHALL BE STAINLESS STEEL.
17. PLUG VALVES SHALL BE DESIGNED FOR A WORKING PRESSURE OF 150 P.S.I. THE VALVE AND ACTUATOR SHALL BE CAPABLE OF SATISFACTORY OPERATION IN EITHER DIRECTION OF FLOW AGAINST PRESSURE DROPS UP TO AND INCLUDING 100 P.S.I. (FOR PLUG VALVES OVER 12 INCHES IN DIAMETER). VALVES SHALL BE BUBBLE TIGHT IN BOTH DIRECTIONS AT 100 PSI DIFFERENTIAL.
18. PLUG VALVES ARE TO BE INSTALLED WITH THE SEAT POINTED TOWARDS THE UPSTREAM FLOW, WHEN SPECIFIED.
19. PLUG VALVE MANUFACTURERS: PRATT, CLOW OR APPROVED EQUAL.
20. SEWER FORCE MAIN VALVE BOXES SHALL BE TYLER UNION 6850 SERIES W/ ADJUSTABLE SCREW TYPE LOCKING COVER, 5 1/4" DIAMETER SHAFT, 18" AND 24" EXTENSIONS, COVER TO BE MARKED "SEWER" , 30"x30"x8" CONCRETE COLLAR INSTALLED WITHIN NON-PAVED AREAS ONLY, CAST IRON ASTM-A-48 CLASS 30. THE STEM OF A BURIED VALVE SHALL BE WITHIN 12" OF FINISHED GRADE UNLESS OTHERWISE SPECIFIED. THE TYPE OF VALVE SHALL BE STAMPED ON A PERMANENT TAG LOCATED NEXT TO THE VALVE BOX IN THE PAVEMENT OR IN THE CONCRETE COLLAR.

C. SERVICE CONNECTION:

1. DOUBLE STRAP SERVICE SADDLES (CC THREADS) SHALL BE STAINLESS STEEL JCM 404 (3/4"-2"). JCM 313 MAY ALSO BE USED FOR 1" AND 2" DOUBLE STRAP SERVICE SADDLES (CC THREADS). ALL SERVICE SADDLES SHALL CONFORM TO ANSI/AWWA C111/A21.11-12 AND ASTM A-588.
2. DOUBLE STRAP TAPPING SADDLES (CC THREADS) SHALL BE McDONALD 3826 (3/4"-2").
3. WATER SERVICE LINES SHALL BE ENDOT ENDOTRACE POLYETHYLENE (3408) TUBING (BLUE IN COLOR), 200 PSI RATED, AND CONFORM TO AWWA C901-08 WITH A SDR OF 9. PIPE JOINTS SHALL BE OF THE COMPRESSION TYPE TOTALLY CONFINED GRIP SEAL AND COUPLING NUT.
4. WATER SERVICE FITTINGS SHALL BE THE FOLLOWING:
3/4"-2": McDONALD 74753T, McDONALD 74753-22,
McDONALD 74758T, McDONALD 74758-22,
McDONALD 74754T, McDONALD 74754-22,
MUELLER H-15428N, MUELLER H-15403N, MUELLER H-15451N
5. DUAL WATER SERVICE FITTING/ U BRANCH CONNECTION SHALL BE THE FOLLOWING:
1"x 3/4" x 6 1/2": McDONALD 708UMF OR MUELLER H-15365N

C. SERVICE CONNECTION (CONTINUED):

6. CORPORATION STOPS SHALL BE THE FOLLOWING:
1" ONLY: MUELLER H-15028N
2" ONLY: MUELLER B-20045N AND McDONALD 73148B
1" AND 2": MUELLER B-25008N, MUELLER P-25008N, McDONALD 74701BT, AND McDONALD 74701B-22
7. CURB STOPS SHALL BE THE FOLLOWING:
UP TO 2": MUELLER B-25170, McDONALD 76102WT, McDONALD 76101W, McDONALD 74606B-22, McDONALD 74606BQ, McDONALD 4704B-22
8. METER COUPLINGS SHALL BE MUELLER H-10890 (3/4" AND 1").
9. BALL STYLE METER STOP SHALL BE McDONALD 74604B (3/4" ONLY).
10. GROUND KEY ANGLE METER STOP SHALL BE MUELLER H-14265N (5/8"x 3/4" x 3/4").
11. METER FLANGE SHALL BE McDONALD 610F (2" ONLY).
12. METER BOXES SHALL BE CONCRETE OLDCASTLE CHRISTY B12 W/ NICOR INC. READ-RITE POLYMER B12 LID, HDR VERSION AND ANTIFLOAT. (FOR 3/4" OR 1" METERS). METER BOXES SHALL BE OLDCASTLE PRECAST N36 BOX W/ B36E LID (FOR 1 1/2" & 2" METERS).

D. INSTALLATION:

1. ALL WATER AND FORCE MAINS SHALL BE LAID WITH A MINIMUM 36" COVER FOR PVC AND 30" FOR DIP.
2. ALL DIP SHALL BE INSTALLED IN ACCORDANCE WITH ANSI/AWWA C600-10.
3. PIPE DEFLECTION SHALL NOT EXCEED 75% OF THE MAXIMUM DEFLECTION RECOMMENDED BY THE MANUFACTURER.
4. NO CONNECTIONS TO EXISTING LINES SHALL BE MADE UNTIL PRESSURE TESTS & BACTERIOLOGICAL TESTS HAVE BEEN PERFORMED AND THE SYSTEM IS ACCEPTABLE TO THE CITY OF LAKE WORTH UTILITY DEPARTMENT AND THE PALM BEACH COUNTY HEALTH DEPARTMENT.
5. PIPE BEDDING MATERIAL SHALL CONSIST OF IN-SITU GRANULAR MATERIAL OR WASHED AND GRADED LIMEROCK 3/8"-7/8" SIZING. UNSUITABLE IN-SITU MATERIALS SUCH AS MUCK, DEBRIS, AND LARGER ROCK SHALL BE REMOVED. BEDDING MATERIAL SHALL BE COMPACTED IN 6" MAXIMUM LAYERS TO ACHIEVE 98% OF THE MAXIMUM DENSITY PER AASTHO T-180. BEDDING MATERIAL SHALL BE PLACED 4" BELOW BOTTOM OF PIPE AND EXTEND TO SPRING LINE OF PIPE.
6. BACKFILL MATERIAL SHALL BE WELL GRADED GRANULAR MATERIAL (2" MAX. SIZE), PLACED AND COMPACTED TO ACHIEVE 98% OF THE MAXIMUM DENSITY PER AASTHO T-180, WITH WELL TAMPED LAYERS NOT TO EXCEED 6" TO A HEIGHT 12" ABOVE PIPE. REFER TO UTILITY TRENCH DETAIL WITHIN PLAN SHEETS.

E. TESTING:

1. BEFORE ANY PHYSICAL CONNECTIONS TO THE EXISTING WATER MAINS ARE MADE, THE COMPLETE WATER SYSTEM SHALL BE PRESSURE TESTED, DISINFECTED, AND CLEARED BY DEPARTMENT OF HEALTH.
2. HYDROSTATIC TESTING OF NEW WATER AND FORCE MAINS SHALL BE PERFORMED AT A MINIMUM STARTING PRESSURE OF 150 PSI (200 PSI MIN. FOR FIRELINES) FOR TWO HOURS IN ACCORDANCE WITH ANSI/AWWA C600-05 OR LATEST REVISION, THE PRESSURE TEST SHALL NOT VARY MORE THAN 5 PSI DURING THE TEST. THE PRESSURE TEST SHALL BE WITNESSED BY A REPRESENTATIVE OF THE CITY OF LAKE WORTH UTILITY DEPARTMENT AND THE ENGINEER OF RECORD.
3. BEFORE ACCEPTANCE FOR OPERATION, THE WATER SYSTEM SHALL BE DISINFECTED IN ACCORDANCE WITH THE ANSI/AWWA C651-05; METER RECONNECTIONS MAY BE MADE TO NEW LINES AFTER TWO CONSECUTIVE DAYS OF BACTERIOLOGICAL SAMPLES HAVE PASSED, AND COPIES OF RESULTS HAVE BEEN RECEIVED AND ACCEPTED BY THE ENGINEER, CITY OF LAKE WORTH UTILITY DEPARTMENT, AND DEPARTMENT OF HEALTH.
4. BACTERIOLOGICAL TESTS THAT MUST BE SUBMITTED TO DEPARTMENT OF HEALTH WITH THE FINAL WATER MAIN CERTIFICATION PACKAGE EXPIRE AFTER 60 DAYS (FROM THE DATE TESTS WERE PERFORMED). CONTRACTOR WILL BE REQUIRED TO PROVIDE NEW BACTERIOLOGICAL TESTS (AT CONTRACTORS EXPENSE) IF THEY SHOULD EXPIRE.
5. SAMPLING POINTS SHALL BE PROVIDED AT THE LOCATIONS SHOWN ON THE PLANS.
6. THE ALLOWABLE LEAKAGE SHALL BE LESS THAN THE NUMBER OF GALLONS PER HOUR AS DETERMINED BY THE FORMULA:

$$L = \frac{S\,D\,P^{(0.5)}}{148000}$$

IN WHICH L EQUALS THE ALLOWABLE LEAKAGE IN GALLONS PER HOUR. S EQUALS LENGTH OF PIPE (LINEAR FEET), D EQUALS NOMINAL DIAMETER OF PIPE (INCHES) AND P EQUALS THE MINIMUM TEST PRESSURE (POUNDS PER SQUARE INCH).

VIII. PAVING

A. GENERAL:

1. ALL UNDERGROUND UTILITIES SHALL BE COMPLETED AND TESTED PRIOR TO FINISHED GRADING AND COMPACTION OF SUBGRADE.
2. ALL EXISTING PAVEMENT, CUT OR DAMAGED BY CONSTRUCTION, SHALL BE PROPERLY RESTORED AT THE CONTRACTOR'S EXPENSE.
3. WHERE ANY PROPOSED PAVEMENT IS TO BE CONNECTED TO EXISTING PAVEMENT, THE EXISTING EDGE OF PAVEMENT SHALL BE CLEANLY SAW CUT TO ENSURE A PROPER JOINT.

B. MATERIALS:

1. LIMEROCK BASE MATERIAL SHALL BE CRUSHED LIMEROCK MIAMI OOLITE WITH A MINIMUM OF 70% CARBONATES OF CALCIUM AND MAGNESIUM (60% FOR LOCAL STREETS, DRIVEWAYS AND PARKING AREAS).
2. ASPHALT SURFACES FOR ROADWAYS SHALL CONFORM WITH THE FOLLOWING:

LOCAL: (40'-50' ROW)	1 1/2" TYPE S-III ASPHALT (TWO 3/4" LIFTS): BOTTOM COURSE: 3/4" LIFT OF TYPE S-III ASPHALTIC CONCRETE PAVEMENT FOLLOWED BY 3/4" LIFT OF TYPE S-III ASPHALTIC CONCRETE PAVEMENT. TACK COAT PER FDOT SECTION 300 BETWEEN LIFTS. NEW MATERIAL ONLY, NO RECYCLED ASPHALT (WEARING COURSE)
COLLECTOR: (60'-90' ROW)	2" TYPE S ASPHALT: BOTTOM COURSE 1 1/4" LIFT OF FDOT TYPE S-1 ASPHALTIC CONCRETE PAVEMENT FOLLOWED BY 3/4" THICKNESS OF FDOT TYPE S-III ASPHALTIC CONCRETE PAVEMENT. TACK COAT PER FDOT SECTION 300 BETWEEN LIFTS. NEW MATERIAL ONLY, NO RECYCLED ASPHALT (WEARING COURSE)

3. REINFORCED CONCRETE SLABS SHALL BE CONSTRUCTED OF CLASS I CONCRETE WITH A MINIMUM STRENGTH OF 3,000 PSI EXCEPT WHERE OTHERWISE SHOWN ON THE PLANS.
4. SIDEWALK CONSTRUCTION SHALL BE CLASS I CONCRETE AND MINIMUM 3000 PSI COMPRESSIVE STRENGTH AT 28 DAYS. SAWCUT CONSTRUCTION JOINTS 5 FOOT O.C. WITHIN 48 HOURS OF PLACING. SIDEWALK THICKNESS SHALL BE 4" THICK WITHIN RESIDENTIAL AREAS. SIDEWALK THINKNESS SHALL BE 6" THICK WITHIN 10' OF CROSS STREETS/INTERSECTIONS, AT DRIVEWAYS, AND WITHIN ALL AREAS SUBJECT TO VEHICULAR TRAFFIC.
5. CURBS : CONCRETE 3000 PSI COMPRESSIVE STRENGTH AT 28 DAYS, SAWCUT CONSTRUCTION JOINTS AT 10 FOOT (O.C.) MAX. SPACING (NO SECTION SHALL BE LESS THAN 4 FEET) WITHIN 48 HOURS OF PLACING.

C. INSTALLATION:

1. STABILZED SUBGRADE FOR ROADWAYS SHALL BE COMPACTED TO 98% OF MAXIMUM DENSITY PER AASTHO T-180 AND HAVE A MIN. L.B.R. OF 40.
2. LIMEROCK BASE COURSE FOR PAVED AREAS SHALL BE COMPACTED TO 98% OF MAXIMUM DRY DENSITY AS PER AASTHO T-180, HAVE A L.B.R. OF 100, AND CONFORM WITH THE FOLLOWING:

LOCAL: (40'-50' ROW)	A MINIMUM THICKNESS OF 8" & SHALL BE CONSTRUCTED IN TWO FOUR INCH LIFTS OR 10" CRUSHED CONCRETE. PRIME & TACK COAT PER FDOT SECTION 300.
COLLECTOR: (60'-90' ROW)	A MINIMUM THICKNESS OF 12" & SHALL BE CONSTRUCTED IN TWO SIX INCH LIFTS. PRIME & TACK COAT PER FDOT SECTION 300.

3. INSTALLATION OF THE BASE COURSE AND WEARING COURSE SHALL CONFORM WITH THE REQUIREMENTS OF THE F.D.O.T. STANDARD SPECIFICATIONS FOR TYPE "S" ASPHALTIC CONCRETE OR THE LATEST REVISION.

D. TESTING:

1. THE FINISHED SURFACE OF THE ASPHALT BASE COURSE AND THAT OF THE ASPHALT WEARING SURFACE SHALL NOT VARY MORE THAN 1/4" FROM THE TEMPLATE. ANY IRREGULARITIES EXCEEDING THIS LIMIT SHALL BE CORRECTED.
2. DENSITY TESTS SHALL BE TAKEN BY AN INDEPENDENT TESTING LABORATORY CERTIFIED BY THE STATE OF FLORIDA.
3. ALL TESTING COSTS (PAVING) SHALL BE PAID FOR BY THE CONTRACTOR.
4. DENSITY TESTS ON THE STABILIZED SUBGRADE SHALL BE SUPPLIED TO THE ENGINEER OF RECORD, AND APPROVED BEFORE ANY LIMEROCK BASE IS CONSTRUCTED.
5. DENSITY TESTS AND AS-BUILTS ON THE FINISHED LIMEROCK BASE SHALL BE SUPPLIED TO THE ENGINEER OF RECORD (E.O.R.) AND APPROVED BEFORE ANY ASPHALT PAVEMENT IS CONSTRUCTED. INCLUDING AS-BUILTS ON PAVED SWALES AND DRIVEWAYS.

IX. PAVEMENT MARKING & SIGNAGE

A. ALL PAVEMENT MARKINGS AND SIGNAGE SHALL BE IN ACCORDANCE WITH THE "MANUAL ON UNIFORM TRAFFIC CONTROL DEVICES FOR STREETS AND HIGHWAYS," LATEST EDITION; AND CITY OF LAKE WORTH PUBLIC SERVICES & UTILITY DEPARTMENT STANDARDS (LATEST EDITION). ALL NEW PAVEMENT MARKINGS SHALL BE THERMOPLASTIC.

X. DE-WATERING

A. THE CONTRACTOR SHALL BE RESPONSIBLE FOR DETERMINING IF DEWATERING PERMIT IS REQUIRED FOR ANY OF THE PROPOSED CONSTRUCTION ACTIVITIES. IF A DEWATERING PERMIT IS REQUIRED, IT SHALL BE THE CONTRACTORS RESPONSIBILITY TO PREPARE AND SUBMIT A DEWATERING REPORT APPLICATION (PREPARED BY A STATE OF FLORIDA LICENSED ENGINEER OR A REGISTERED PROFESSIONAL GEOLOGIST) TO ALL APPLICABLE AGENCIES FOR PERMIT APPROVAL. THE CONTRACTOR MAY BE REQUIRED TO PROVIDE TESTING AND MONITORING OF THE DEWATERING OPERATIONS AND WILL BE RESPONSIBLE FOR ALL COSTS ASSOCIATED WITH MEANS AND METHODS OF DEWATERING WHICH WILL BE SET FORTH BY THE DEWATERING PERMIT(S) OBTAINED BY THE CONTRACTOR.

THE CONTRACTOR WILL BE REQUIRED TO PROVIDE TESTING AND MONITORING OF THE DEWATERING OPERATIONS AND WILL BE RESPONSIBLE FOR ALL COSTS ASSOCIATED WITH MEANS AND METHODS OF DEWATERING WHICH WILL BE SET FORTH BY THE DEWATERING PERMIT(S) OBTAINED BY THE CONTRACTOR.

XI. NPDES REQUIREMENT

A. AT LEAST TWO (2) DAYS PRIOR TO THE START OF CONSTRUCTION, THE CONTRACTOR SHALL SUBMIT A CGP "NOTICE OF INTENT (N.O.I.) TO USE GENERIC PERMIT FOR STORMWATER DISCHARGE FROM CONSTRUCTION ACTIVITIES THAT DISTURB ONE OR MORE ACRES OF LAND" FORM (DEP FORM 62-621.300(4)(b)) TO FDEP NOTICES CENTER. THE CONTRACTOR WILL BE RESPONSIBLE FOR (AT THE CONTRACTORS EXPENSE) (1) ASSISTING THE OWNER(S) WITH PREPARING, COMPLETING, AND FILING THE N.O.I. AND N.O.T. TO FDEP (2) PREPARING A STORM WATER POLLUTION PREVENTION PLAN (SWPPP) (REQUIRED PRIOR TO THE NOI SUBMITTAL) (3) IMPLEMENTATION OF THE STORM WATER POLLUTION PREVENTION PLAN (SWPPP) THAT WAS REQUIRED TO BE DEVELOPED PRIOR TO THE NOI SUBMITTAL, AND (4) RETENTION OF RECORDS REQUIRED BY THE PERMIT, INCLUDING RETENTION OF A COPY OF THE SWPPP AT THE CONSTRUCTION SITE FROM THE DATE OF PROJECT INITIATION TO THE DATE OF FINAL SITE STABILIZATION. A "NOTICE OF TERMINATION (N.O.T.) OF GENERIC PERMIT COVERAGE" FORM (DEP FORM 62-621.300(6)) MUST BE SUBMITTED TO FDEP TO DISCONTINUE PERMIT COVERAGE, SUBSEQUENT TO COMPLETION OF CONSTRUCTION. FOR ADDITIONAL INFORMATION SEE FDEP WEBSITE:
http://www.dep.state.fl.us/water/stormwater/npdes.
AS OF MARCH, 2003 THRESHOLD WILL BE REDUCED TO PROJECTS ONE ACRE OR MORE.

XII. PROJECT CLOSE-OUT

A. CLEAN-UP:

1. DURING CONSTRUCTION, THE PROJECT SITE AND ALL ADJACENT AREAS SHALL BE MAINTAINED IN A NEAT AND CLEAN MANNER, AND UPON FINAL CLEAN-UP, THE PROJECT SITE SHALL BE LEFT CLEAR OF ALL SURPLUS MATERIAL OR TRASH. THE PAVED AREAS SHALL BE SWEPT BROOM CLEAN.
2. THE CONTRACTOR SHALL RESTORE OR REPLACE, WHEN AND AS DIRECTED, ANY PUBLIC OR PRIVATE PROPERTY DAMAGED BY HIS WORK, EQUIPMENT, OR EMPLOYEES, TO A CONDITION AT LEAST EQUAL TO THAT EXISTING IMMEDIATELY PRIOR TO THE BEGINNING OF OPERATIONS. TO THAT END, THE CONTRACTOR SHALL DO, AS REQUIRED, ALL NECESSARY HIGHWAY, DRIVEWAY, WALK AND LANDSCAPING WORK. SUITABLE MATERIALS AND METHODS SHALL BE USED FOR SUCH RESTORATION.
3. WHERE MATERIAL OR DEBRIS HAS WASHED OR FLOWED INTO OR HAS BEEN PLACED IN WATER COURSES, DITCHES, DRAINS, CATCH BASINS, OR ELSEWHERE AS A RESULT OF THE CONTRACTOR'S OPERATIONS, SUCH MATERIAL OR DEBRIS SHALL BE REMOVED AND SATISFACTORILY DISPOSED OF DURING THE PROGRESS OF THE WORK, AND THE AREA KEPT IN A CLEAN AND NEAT CONDITION.
4. ALL PROPERTY MONUMENTS OR PERMANENT REFERENCES, REMOVED OR DESTROYED BY THE CONTRACTOR DURING CONSTRUCTION SHALL BE RESTORED BY A STATE OF FLORIDA REGISTERED LAND SURVEYOR AT THE CONTRACTOR'S EXPENSE.
5. ALL UNPAVED SURFACES DISTURBED AS A RESULT OF CONSTRUCTION ACTIVITIES SHALL BE RESTORED TO A CONDITION EQUAL TO OR BETTER THAN THAT WHICH EXISTED BEFORE THE CONSTRUCTION.

B. PROJECT RECORD DOCUMENTS:

1. DURING THE DAILY PROGRESS OF THE JOB, THE CONTRACTOR SHALL RECORD ON HIS SET OF CONSTRUCTION DRAWINGS THE EXACT LOCATION, LENGTH, MATERIAL AND ELEVATION OF ANY FACILITY NOT BUILT EXACTLY ACCORDING TO PLANS.
2. UPON COMPLETION OF DRAINAGE IMPROVEMENTS AND LIMEROCK BASE CONSTRUCTION (AND BEFORE PLACING ASPHALT PAVEMENT) THE CONTRACTOR SHALL FURNISH THE ENGINEER OF RECORD "AS-BUILT" PLANS FOR THESE IMPROVEMENTS. SEE ENGINEERS AS-BUILT REQUIREMENTS. ALL "AS-BUILT" INFORMATION SHALL BE CERTIFIED BY A FLORIDA REGISTERED LAND SURVEYOR.
3. UPON COMPLETION OF THE WATER SYSTEMS AND PRIOR TO FINAL PAYMENT, THE CONTRACTOR SHALL SUBMIT TO THE ENGINEER OF RECORD ONE COMPLETE SET OF ALL "AS-BUILT" CONTRACT DRAWINGS FOR REVIEW AND APPROVAL. THESE DRAWINGS SHALL BE MARKED TO SHOW "AS-BUILT" CONSTRUCTION CHANGES AND DIMENSIONS, LOCATIONS, AND ELEVATIONS OF ALL IMPROVEMENTS. ALSO SEE ENGINEERS AS-BUILT REQUIREMENTS.
4. ALL "AS-BUILT" INFORMATION SHALL BE CERTIFIED BY A FLORIDA REGISTERED LAND SURVEYOR.

XIII. ENGINEER'S AS-BUILT REQUIREMENTS

A. ALL AS-BUILT LOCATIONS MENTIONED BELOW SHALL PROVIDE COORDINATES (NORTHING AND EASTING) SPATIALLY LOCATED WITHIN STATE PLANE COORDINATES. ALL LOCATIONS (NORTHING AND EASTING) SHALL BE PROVIDED TO THE NEAREST HUNDREDTH OF A FOOT. ALSO ALL AS-BUILT LOCATION POINT COORDINATES SHALL BE PROVIDED AT THE CORRESPONDING NORTHING AND EASTING IN AN AUTOCAD FILE.

B. IN ORDER TO ORGAINZE ITS PRESENTATION AND MAKE DRAWINGS READABLE, THE WATER AND SANITARY SEWER/WASTEWATER AS-BUILTS SHALL BE PROVIDED ON SEPARATE SHEETS.

C. EASEMENT LOCATIONS (NORTHING AND EASTINGS) SHALL BE PROVIDED ON AS-BUILTS.

D. INDICATE PIPE JOINT LOCATIONS WHERE WATER AND WASTEWATER OR RECLAIMED WATER PIPING CROSSES.

E. SHOWING THE EXTENTS OF D.I.P. WATER MAIN OVER WATER CONFLICTS.

F. SHOW ALL ABANDONED IN PLACE FACILITIES INCLUDING THE EXTENT AND METHOD OF ABANDONMENT.

G. AS-BUILTS OF WATER AND FIRE LINES SHALL INCLUDE THE FOLLOWING INFORMATION:

1. TOP OF PIPE ELEVATIONS SHALL BE PROVIDED AT VERTICAL DEFLECTION POINTS, EVERY 50 LINEAR FEET AND TO THE NEAREST HUNDREDTH OF A FOOT.
2. LOCATIONS AND TOP OF PIPE ELEVATIONS OF ALL VERTICAL DEFLECTION POINTS AND FITTINGS INCLUDING BENDS, TEES, CHECK VALVES, GATE VALVES, DOUBLE DETECTOR CHECK VALVES, FIRE HYDRANTS, ETC.
3. ALL TIE INS TO EXISTING LINES SHALL PROVIDE LOCATION AND TOP OF PIPE ELEVATION.
4. LOCATION AND TOP OF PIPE ELEVATION AT THE ENDS OF ALL WATER SERVICES AT THE BUILDINGS OR WHERE THE WATER SERVICE TERMINATES.
5. CROSSING INFORMATION BETWEEN PROPOSED WATER MAIN PIPING AND EXISTING AND PROPOSED SEWER MAIN, FORCE MAIN, DRAINAGE, WATER MAIN, UTILITIES, ETC.
6. THE ENDS OF ALL WATER SERVICES AT THE BUILDINGS OR HOMES SHALL BE AS-BUILT OR WHERE THE WATER SERVICE TERMINATES.

H. AS-BUILTS OF SEWER FORCE MAINS SHALL BE PREPARED THE SAME AS WATER LINE AS-BUILTS.

I. AS-BUILTS OF ALL GRAVITY SANITARY SEWER LINES SHALL BE NEAREST HUNDREDTH OF A FOOT AND INCLUDE THE FOLLOWING INFORMATION:

1. RIMS, INVERTS AND LENGTH OF PIPING BETWEEN STRUCTURES AND ACTUAL SLOPE BETWEEN MANHOLE CENTERS.
2. MANHOLE RIMS, INVERT ELEVATIONS, FORCE MAIN CONNECTIONS TO MANHOLES, LIFT STATION TOP SLAB, LIFT STATION BOTTOM OF WETWELL, AND CONTROL SET POINTS SHALL BE PROVIDED TO THE NEAREST ONE HUNDREDTH OF A FOOT.
3. THE STUB ENDS OF ALL SEWER LATERALS SHALL BE LOCATED AND IF THERE ARE ANY CLEANOUTS INSTALLED ON THE SEWER LATERALS THEN THE INVERT ELEVATION OF THESE CLEANOUTS NEED TO BE OBTAINED.
4. CROSSING INFORMATION BETWEEN PROPOSED SEWER LATERALS AND PROPOSED OR EXISTING WATER MAINS SHALL ALSO BE PROVIDED.
5. LIFT STATION AS-BUILTS SHALL CONSIST OF TOP OF WET WELL ELEVATION, INVERT ELEVATION OF THE INCOMING LINE(S), BOTTOM OF THE WET WELL AND AS-BUILTS OF THE COMPOUND AREA INCLUDING INTERNAL FLOAT CONTROL(S).
6. AS-BUILTS OF SANITARY SEWER AND WATER MAIN PROFILES SHALL BE PROVIDED TO INCLUDE A ELEVATIONS, LOCATIONS, AND CROSSINGS AS DESCRIBED ABOVE.

J. DRAINAGE AS-BUILTS SHALL BE PROVIDED SHOWING OF ALL DRAINAGE PIPING AND STRUCTURES WHICH SHALL INCLUDE THE FOLLOWING INFORMATION:

1. LOCATION, RIM ELEVATION, INVERTS, BOTTOM OF STRUCTURE, BOTTOM OF POLLUTION RETARDANT BAFFLE AND WEIR ELEVATIONS (IF APPLICABLE) ON DRAINAGE STRUCTURES.
2. LENGTH AND SIZE OF THE PIPING BETWEEN STRUCTURES. SIZE OF THE PIPING SHALL BE VERIFIED BY THE SURVEY CREW AT THE TIME OF AS-BUILT.
3. LENGTH AND SIZE OF EXFILTRATION TRENCH BETWEEN STRUCTURES ALONG WITH THE TOP AND BOTTOM ELEVATIONS OF EXFILTRATION TRENCH. LENGTH, SIZE, TOP OF AND BOTTOM OF EXFILTRATION TRENCH SHALL BE VERIFIED BY THE SURVEY CREW AT THE TIME OF AS-BUILT.
4. CONTROL STRUCTURE AS-BUILTS SHALL INCLUDE, BUT NOT BE LIMITED TO, RIM ELEVATIONS, WEIR ELEVATIONS, BOTTOM ELEVATION OF THE STRUCTURES, BOTTOM ELEVATION OF POLLUTION RETARDANT BAFFLE, AND INVERTS ELEVATIONS OF PIPING.
5. CROSSING INFORMATION BETWEEN PROPOSED DRAINAGE PIPING AND EXISTING AND PROPOSED SEWER MAIN, FORCE MAIN, DRAINAGE, WATER MAIN, UTILITIES, ETC.

K. ROCK AS-BUILTS SHALL BE PROVIDED FOR ROADWAYS AND DRIVEWAYS AREAS WHICH SHALL CONSIST OF THE FOLLOWING:

1. ROCK ELEVATIONS AT ALL HIGH AND LOW POINTS, AND AT ENOUGH INTERMEDIATE POINTS TO CONFIRM SLOPE CONSISTENCY.
2. ROCK AS-BUILTS AND LIP OF CURB AS-BUILT ELEVATIONS SHALL BE TAKEN AT ALL LOCATIONS WHERE THERE IS A FINISH GRADE ELEVATION SHOWN ON THE DESIGN PLANS.
3. ALL CATCH BASIN AND MANHOLE RIM ELEVATIONS SHALL BE SHOWN.
4. ELEVATIONS AROUND ISLAND AREAS WILL ALSO BE REQUIRED.
5. WHERE CONCRETE IS TO BE USED AS A FINISHED PRODUCT FOR THE ROADWAY OR DRIVEWAY ROCK AS-BUILTS WILL BE REQUIRED AS INDICATED ABOVE AS WELL AS AS-BUILTS ON THE FINISHED CONCRETE AT LOCATIONS WHERE THERE IS A FINISH GRADE ELEVATION SHOWN ON THE DESIGN PLANS.
6. AS-BUILTS SHALL BE TAKEN ON ALL PAVED AND UNPAVED SWALES, PRIOR TO PLACEMENT OF ASPHALT OR TOPSOIL/SOD, AT ENOUGH INTERMEDIATE POINTS TO CONFIRM SLOPE CONSISTENCY AND CONFORMANCE TO THE PLAN DETAILS.

L. SIDEWALK AS-BUILTS SHALL BE PROVIDED CONSISTING OF THE FOLLOWING: LOCATION REFERENCED TO RIGHT OF WAY AND AS-BUILT ELEVATIONS PROVIDED AT BACK AND FRONT OF SIDEWALK EVERY 50 LF AND AT THE PC AND PT ALONG CURVES.

M. UPON COMPLETION OF THE WORK, THE CONTRACTOR SHALL PREPARE RECORD DRAWINGS AND "AS-BUILTS", ON FULL SIZE, 24" X 36" REPRODUCIBLE MATERIAL. EIGHT (8) SETS OF THESE RECORD DRAWINGS AND "AS-BUILTS" SHALL BE SIGNED AND SEALED BY A FLORIDA REGISTERED PROFESSIONAL LAND SURVEYOR. ADDITIONALLY, AN ELECTRONIC COPY OF THESE RECORD DRAWINGS AND "AS-BUILTS", SHALL BE SUBMITTED TO THE ENGINEER OF RECORD IN BOTH PDF AND AUTOCAD (VERSION 2007 OR GREATER).

N. FINAL DELIVERABLES SHALL INCLUDE AN AUTOCAD-COMPATIBLE DIGITAL FILE CONTAINING ALL PERTINENT RECORD DRAWING AND "AS-BUILT" INFORMATION (INCLUDING, WATER, SEWER, PAVING, AND DRAINAGE). FILE TO BE SPATIALLY LOCATED WITHIN STATE PLANE COORDINATES.

Matthew J. Cigale
Florida P.E. No. 74584

CITY PROJECT NO. LS 1609
CTA JOB No. 15-0006-001-04
TASK ORDER NO. 6

REVISIONS

DATE	BY	DESCRIPTION	DATE	BY	DESCRIPTION

	NAME	DATE		NAME	DATE
DESIGNED BY			DRAWN BY		
CHECKED BY			CHECKED BY		
SUPERVISED BY:					

CRAVEN • THOMPSON AND ASSOCIATES, INC.
ENGINEERS • PLANNERS • SURVEYORS
3563 N.W. 53RD STREET, FORT LAUDERDALE, FLORIDA 33309
FAX: (954) 739-6409 TEL.: (954) 739-6400
FLORIDA LICENSED ENGINEERING, SURVEYING & MAPPING BUSINESS No. 271
FLORIDA LICENSED LANDSCAPE ARCHITECTURE BUSINESS No. C000114

NEW SANITARY GRAVITY SEWER INSTALLATION & WATER MAIN RE-PLACEMENT FROM 10TH TO 12TH AVE. SOUTH IN ALLEY BETWEEN B & C ST.
PREPARED FOR:
CITY OF LAKE WORTH

GENERAL NOTES & SPECIFICATIONS

SHEET NO.
C-2

R:\Engineering\2015\15-0006-001-Lake Worth Continuing Services\004-11th to 12th Water & Sewer- TO#6\Drawings\15-0006-001-04-SPECS.dwg [C-2] Jun 16, 2016 2:51pm MCIGALE

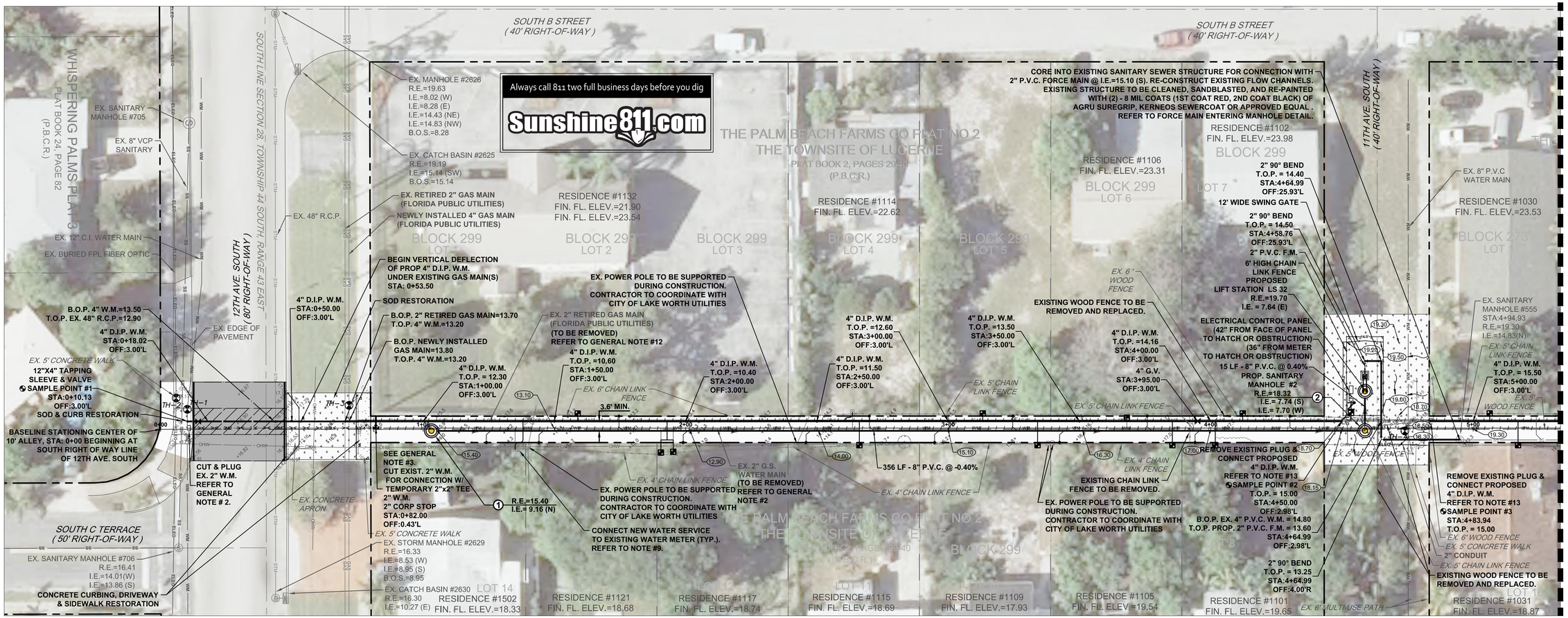

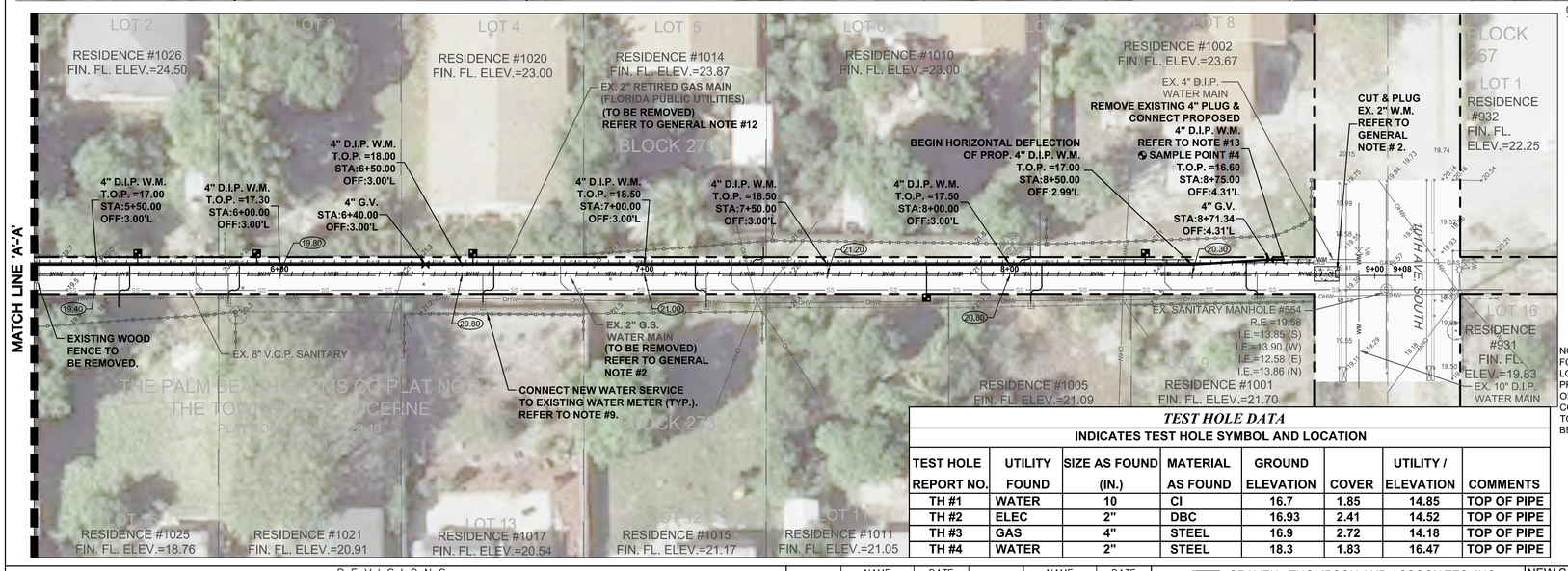

TEST HOLE DATA

INDICATES TEST HOLE SYMBOL AND LOCATION

TEST HOLE REPORT NO.	UTILITY FOUND	SIZE AS FOUND (IN.)	MATERIAL AS FOUND	GROUND ELEVATION	COVER	UTILITY / ELEVATION	COMMENTS
TH #1	WATER	10	CI	16.7	1.85	14.85	TOP OF PIPE
TH #2	ELEC	2"	DBC	16.93	2.41	14.52	TOP OF PIPE
TH #3	GAS	4"	STEEL	16.9	2.72	14.18	TOP OF PIPE
TH #4	WATER	2"	STEEL	18.3	1.83	16.47	TOP OF PIPE

GENERAL NOTES:

1.) WATER AND SEWER SERVICE PROVIDED BY THE CITY OF LAKE WORTH.

2.) THE REMOVAL OR ABANDONMENT OF EXISTING UTILITIES (WATER, SEWER, GAS, ETC.) SHALL BE COORDINATED WITH THE CONSTRUCTION, ENGINEER'S ACCEPTANCE, AND CERTIFICATION OF THE PROPOSED WATER SYSTEM. ALL EXISTING UTILITIES (WATER, SEWER, GAS, ETC.) AND DRAINAGE SERVICES MUST BE MAINTAINED BY THE CONTRACTOR THROUGHOUT THE ENTIRE DURATION OF CONSTRUCTION. CONTRACTOR TO COORDINATE SHUT-DOWN OF EXISTING MAIN (IF REQUIRED) WITH CITY OF LAKE WORTH.

3.) CONTRACTOR IS RESPONSIBLE FOR CONSTRUCTING, COORDINATING & MAINTAINING TEMPORARY WATER MAIN AND TEMPORARY WATER SERVICES INCLUDING CONNECTING TEMPORARY WATER SERVICES TO EXISTING WATER METER. CONTRACTOR SHALL ADJUST TEMPORARY WATER MAIN AND SERVICES AS REQUIRED TO FACILITATE THE INSTALLATION OF PROPOSED WATER AND SANITARY SEWER IMPROVEMENTS.

4.) CONTRACTOR SHALL COORDINATE THE SHUTDOWN OF EXISTING WATER SERVICE WITH THE CITY OF LAKE WORTH AND THE AFFECTED CITY RESIDENTS. OTHER THAN APPROVED SHUTDOWN HOURS BY THE CITY OF LAKE WORTH, EXISTING WATER SERVICE MUST BE MAINTAINED AND OPERATIONAL THROUGHOUT CONSTRUCTION.

5.) CONTRACTOR SHALL FIELD VERIFY THE LOCATIONS AND ELEVATIONS OF ALL EXISTING UNDERGROUND UTILITIES PRIOR TO STARTING THE WORK.

6.) CONTRACTOR IS REQUIRED TO OBTAIN PLUMBING PERMIT FROM CITY OF LAKE WORTH BUILDING DEPARTMENT FOR NEW WATER AND SEWER SERVICE CONNECTIONS ON PRIVATE PROPERTY.

7.) CONTRACTOR IS RESPONSIBLE FOR COMPLETE RESTORATION OF EXISTING LANDSCAPING, SOD, DECORATIVE WALLS, FENCING, MAIL BOXES, ASPHALT, PAVERS, & CONCRETE DAMAGED DUE TO PROPOSED CONSTRUCTION ACTIVITIES IN OR OUT OF RIGHT OF WAY.

NOTE: PROPOSED WATER SERVICES AND SEWER SERVICES ARE SHOWN FOR INFORMATION ONLY. CONTRACTOR SHALL FIELD VERIFY ACTUAL LOCATIONS OF EXISTING WATER AND SEWER SERVICE LOCATIONS ON PRIVATE PROPERTY OR AT THE PROPERTY LINE PRIOR TO INSTALLATION OF NEW WATER AND SEWER SERVICE AT THE PROPOSED MAIN LINE. CONTRACTOR SHALL FIELD ADJUST PROPOSED MAIN LINE CONNECTIONS TO ACCOMMODATE EXISTING SERVICE(S). NO ADDITIONAL PAYMENT WILL BE MADE FOR THIS WORK.

8.) CONTRACTOR TO ENSURE WATER SERVICE RECONNECTION PRIOR TO ABANDONMENT/ REMOVAL OF EXISTING WATER MAINS.

9.) PROPOSED METER BOX SYMBOL INDICATES TO REMOVE EXISTING WATER METER BOX AND INSTALL NEW WATER METER BOX. ONLY DAMAGED EXISTING METER BOXES SHALL BE REMOVED AND RE-PLACED. CONTRACTOR SHALL FIELD VERIFY LOCATION OF EXISTING METER BOXES AND DETERMINE WITH CITY REPRESENTATIVE AND ENGINEER WHICH METER BOXES ARE DAMAGED AND IN NEED OF RE-PLACEMENT.

10.) CONTRACTOR TO REMOVE VALVES AND VALVE BOXES FROM ALL ABANDONED AND/OR GROUT-FILLED WATER MAINS.

11.) EXISTING FIRE HYDRANTS DESIGNATED FOR REMOVAL SHALL BE SALVAGED AND DELIVERED TO THE CITY OF LAKE WORTH WATER UTILITIES SERVICES DEPARTMENT.

12.) CONTRACTOR SHALL CONTACT FLORIDA PUBLIC UTILITIES PRIOR TO THE REMOVAL OF EXISTING RETIRED GAS MAINS TO CONFIRM THAT THE GAS MAIN IS OUT OF SERVICE AND HOW TO TERMINATE REMOVAL OF GAS MAIN AT CONNECTION POINT TO ACTIVE GAS MAIN.

13.) CONTRACTOR TO FIELD VERIFY LOCATION OF PROPOSED WATER MAIN TIE-IN CONNECTION POINTS TO EXISTING PRIOR TO INSTALLATION OF PROPOSED IMPROVEMENTS.

PROPOSED LEGEND:

- SINGLE WATER SERVICE & METER BOX
- DOUBLE WATER SERVICE & METER BOXES
- TEE
- RPZ BACKFLOW PREVENTER
- GATE VALVE
- BACTERIOLOGICAL SAMPLING POINT
- SINGLE WATER SERVICE CONNECTED TO EXISTING METER BOX
- SANITARY SEWER MANHOLE
- 6" SANITARY SEWER LATERAL W/ CLEANOUT
- (15.4) INDICATES PROPOSED GRADE
- TO BE ABANDONED IN-PLACE & GROUT FILLED
- TO BE REMOVED

PROPOSED LEGEND- PAVING & GRADING

- INDICATES MILL & OVERLAY EXISTING ASPHALT
- INDICATES PAVEMENT RESTORATION
- INDICATES 6" THICK CONCRETE DRIVEWAY & SIDEWALK RESTORATION
- INDICATES SOD RESTORATION

EXISTING LEGEND:

- OHW — OVER HEAD WIRES
- PROPERTY LINE
- WM — WATER MAIN
- STRM — STORM DRAINAGE
- SS — SANITARY SEWER (GRAVITY)
- ELEC — FIBER OPTIC CABLE
- GAS — GAS MAIN

Matthew J. Cigale
Florida P.E. No. 74584

CITY PROJECT NO. LS 1609
CTA JOB No. 15-0006-001-04
TASK ORDER NO. 6

REVISIONS						
DATE	BY	DESCRIPTION	DATE	BY	DESCRIPTION	

	NAME	DATE		NAME	DATE
DESIGNED BY			DRAWN BY		
CHECKED BY			CHECKED BY		
SUPERVISED BY:					

CRAVEN • THOMPSON AND ASSOCIATES, INC.
ENGINEERS • PLANNERS • SURVEYORS
3563 N.W. 53RD STREET, FORT LAUDERDALE, FLORIDA 33309
FAX: (954) 739-6409 TEL.: (954) 739-6400
FLORIDA LICENSED ENGINEERING, SURVEYING & MAPPING BUSINESS No. 271
FLORIDA LICENSED LANDSCAPE ARCHITECTURE BUSINESS No. C000114

NEW SANITARY GRAVITY SEWER INSTALLATION & WATER MAIN RE-PLACEMENT FROM 10TH TO 12TH AVE. SOUTH IN ALLEY BETWEEN B & C ST.
PREPARED FOR:
CITY OF LAKE WORTH

WATER AND SEWER PLAN

SHEET NO.
C-3

R:\Engineering\2015\15-0006-001-Lake Worth Continuing Services\004-11th to 12th Water & Sewer- TO#6\Drawings\15-0006-001-04-WS.dwg [C-3] Jun 21, 2016 4:07pm MCIGALE

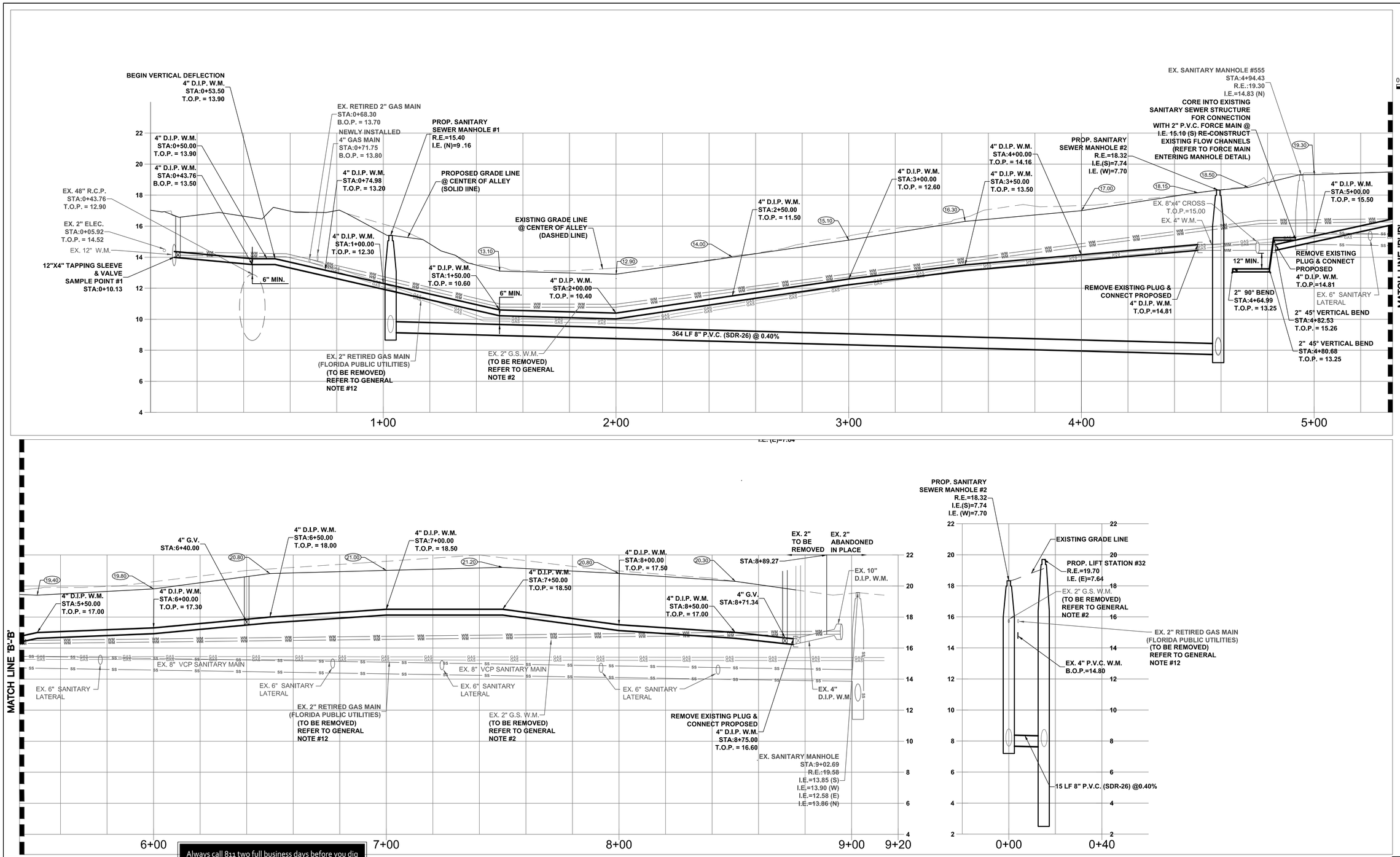

Always call 811 two full business days before you dig

Sunshine811.com

Matthew J. Cigale
Florida P.E. No. 74584

CITY PROJECT NO. LS 1609
CTA JOB No. 15-0006-001-04
TASK ORDER NO. 6

REVISIONS					
DATE	BY	DESCRIPTION	DATE	BY	DESCRIPTION

	NAME	DATE		NAME	DATE
DESIGNED BY			DRAWN BY		
CHECKED BY			CHECKED BY		
SUPERVISED BY:					

CRAVEN • THOMPSON AND ASSOCIATES, INC.
ENGINEERS • PLANNERS • SURVEYORS
3563 N.W. 53RD STREET, FORT LAUDERDALE, FLORIDA 33309
FAX: (954) 739-6409 TEL.: (954) 739-6400
FLORIDA LICENSED ENGINEERING, SURVEYING & MAPPING BUSINESS No. 271
FLORIDA LICENSED LANDSCAPE ARCHITECTURE BUSINESS No. C000114

NEW SANITARY GRAVITY SEWER INSTALLATION & WATER MAIN RE-PLACEMENT FROM 10TH TO 12TH AVE. SOUTH IN ALLEY BETWEEN B & C ST.
PREPARED FOR:
CITY OF LAKE WORTH

WATER AND SEWER PROFILE

SHEET NO.
C-4

R:\Engineering\2015\15-0006-001-Lake Worth Continuing Services\004-11th to 12th Water & Sewer- TOPE\Drawings\15-0006-001-04-WS-NEW.dwg [C-4] Jun 20, 2016 10:48am MCIGALE

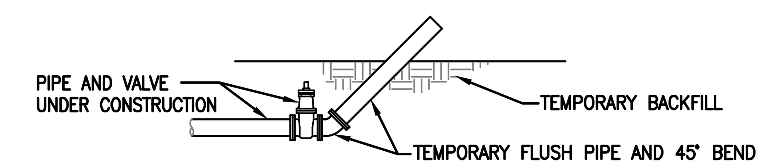

NOTES:

1. UPON COMPLETION OF THE PIPE INSTALLATION FOR ANY SECTION, THE MAINS SHALL BE PIGGED. CANNON FLUSHING MAY BE USED IN ADDITION TO PIGGING ONLY WITH THE APPROVAL OF THE ENGINEER. CANNON FLUSHING SHALL ACHIEVE A MINIMUM VELOCITY OF 2.5 FEET PER SECOND IN THE PIPE, FITTINGS, ETC.
2. INSTALL A 45° BEND AND ASSOCIATED PIPING AS SHOWN TO DIRECT THE FLUSHING WATER AWAY FROM THE IMMEDIATE WORK AREA AND EXERCISE DUE CARE SO AS TO ENSURE THAT THE WATER USED IN FLUSHING DOES NOT CAUSE A NUISANCE OR INFLICT PROPERTY DAMAGE.
3. BENDS AND PIPING SHALL BE THE SAME SIZE AS THE LINE TO BE FLUSHED.
4. PRIOR TO THE ACTUAL LINE FLUSHING OPERATION, THE CONTRACTOR SHALL PROPERLY NOTIFY THE ENGINEER OF SUCH INTENDED WATER USE.
5. NO EXISTING VALVES SHALL BE TURNED ON OR OFF, EXCEPT BY AUTHORIZED UTILITY PERSONNEL.
6. PIGGING AND FLUSHING SHALL NOT BE ACCOMPLISHED WITHOUT THE ACTUAL PRESENCE OF THE ENGINEER.
7. AFTER THE LINE UNDER CONSTRUCTION HAS BEEN SUCCESSFULLY PIGGED AND FLUSHED, THE CONTRACTOR SHALL REMOVE THE TEMPORARY PIPING ARRANGEMENT AND PROCEED WITH THE REMAINING CONSTRUCTION AS SPECIFIED.

PIGGING AND CANNON FLUSHING

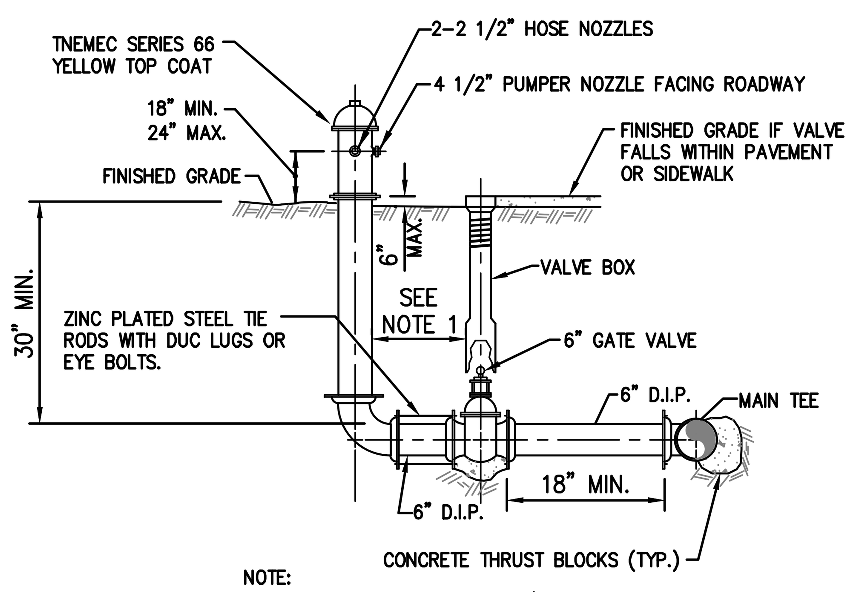

NOTE:
1. ON RUNS LONGER THAN 60' ANOTHER VALVE IS REQUIRED.
2. MEGALUGS REQUIRED ON ALL JOINTS.
3. BLUE RPM TO BE LOCATED WITHIN CENTERLINE OF ROADWAY

FIRE HYDRANT INSTALLATION

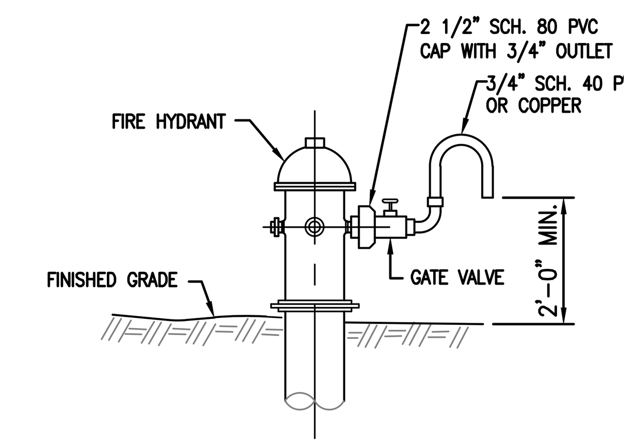

SAMPLE POINT ON FIRE HYDRANT

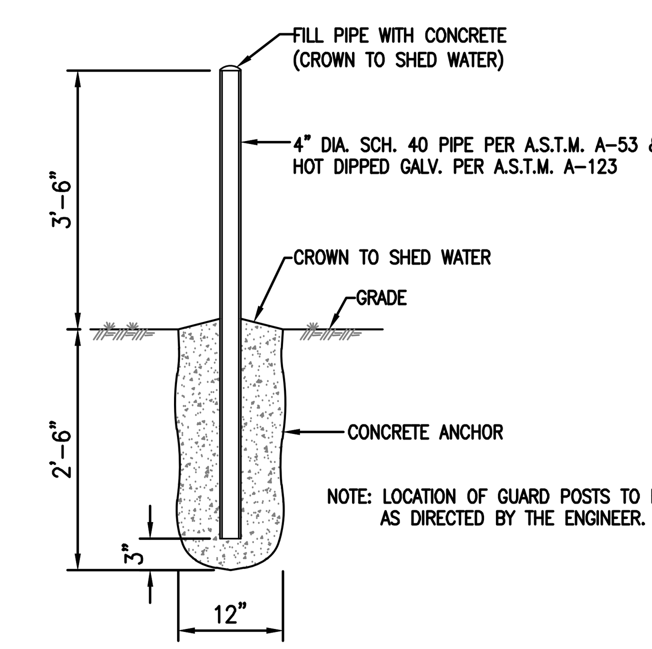

GUARD POST

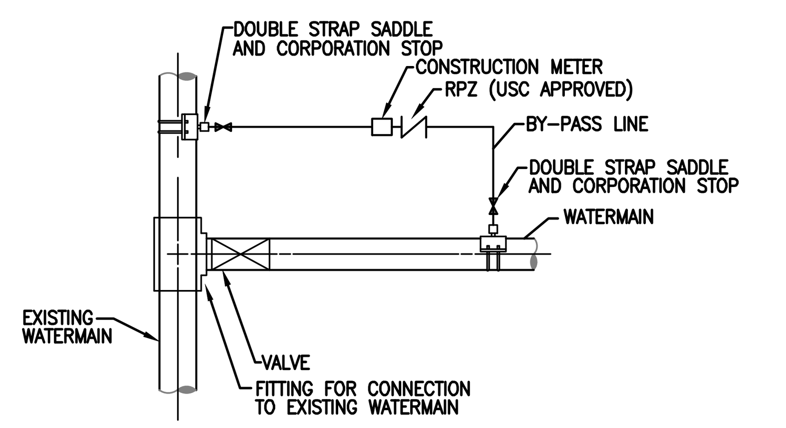

1. PERFORM PRESSURE AND LEAKAGE TEST ON TAPPING SLEEVE AND TAPPING VALVE (WHEN USED) PRIOR TO MAKING TAP.
2. ALL WATER FOR FLUSHING, PRESSURE AND LEAKAGE TESTS, AND BACTERIOLOGICAL CLEARANCE MUST BE FROM THE "BY-PASS" LINE WITH CHECK VALVE IN PLACE.
3. DURING ALL PRESSURE AND LEAKAGE TESTS, BOTH CORPORATION STOPS ON THE "BY-PASS" LINE MUST BE CLOSED.
4. THE UTILITY COMPANY SUPPLYING THE WATER SHALL BE NOTIFIED BEFORE FILLING AND FLUSHING. ONLY THE UTILITY COMPANY SHALL OPERATE THE VALVES.
5. DOUBLE STRAP SADDLES ARE NOT REQUIRED WHEN CONNECTING TO DUCTILE IRON PIPE.
6. CONNECT PRESSURE TEST PUMP TO SERVICE LINE OR BLOWOFF. NO EXTRA TAPS ARE PERMITTED UNLESS NEITHER A SERVICE LINE OR BLOWOFF ARE PRESENT IN THE TEST SECTION.
7. WATERMAIN VALVES CANNOT BE OPENED UNTIL THE ENTIRE SYSTEM HAS BEEN CLEARED BY THE GOVERNING PERMITTING AGENCY.
8. REMOVE THE "BY-PASS" LINE AFTER THE MAIN HAS BEEN CLEARED. PLUG CORPORATION STOP WITH THREADED BRASS PLUG.
9. INSTALL ADJUSTABLE CAST IRON VALVE BOX ON THE VALVE.

CONNECTION TO EXISTING WATER MAIN–TAPPING SLEEVE AND VALVE

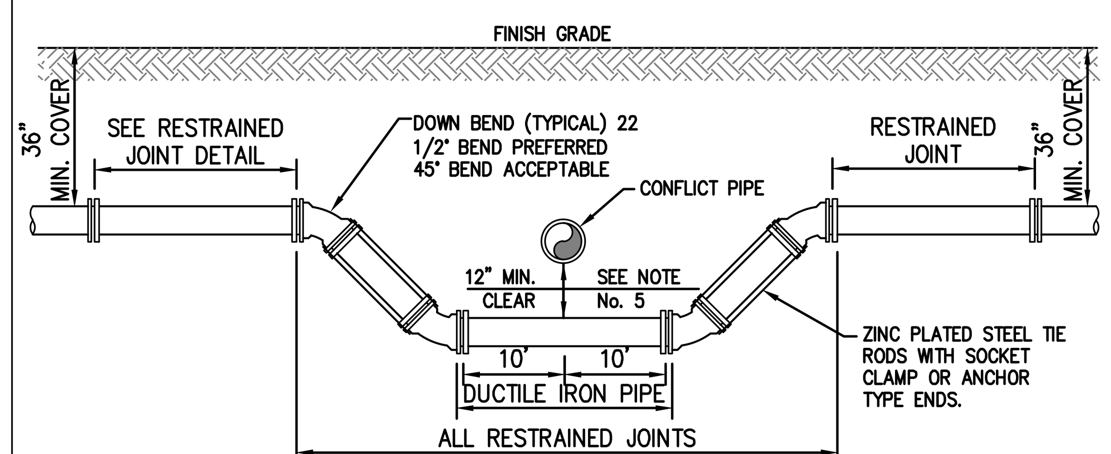

FITTING TYPE JOINTS

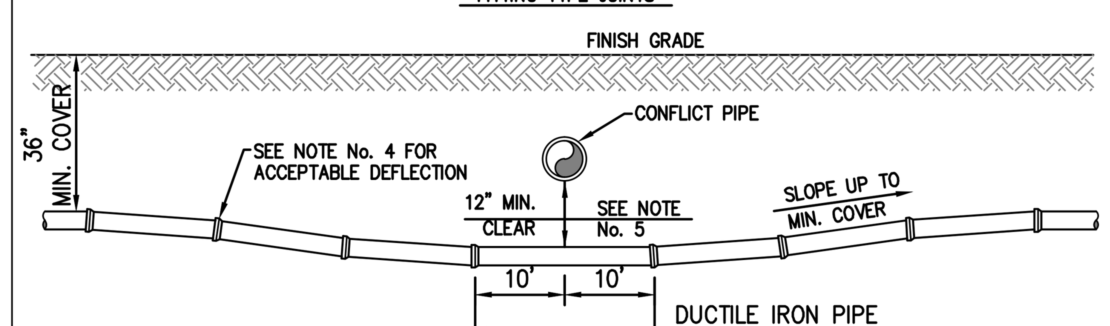

DEFLECTION TYPE JOINTS
PREFERRED METHOD

NOTES:

1. THERE SHALL BE, IN ALL CASES, A MINIMUM OF 12" SEPARATION BETWEEN WATER MAINS AND FORCE MAINS.
2. WHEREVER POSSIBLE WATER MAINS SHALL PASS OVER FORCE MAINS OR STORM SEWERS.
3. FITTINGS SHALL BE RESTRAINED WITH MEGALUGS AND TIE RODS BETWEEN OFFSET FITTINGS. THRUST BLOCKS SHALL ONLY BE USED WITH THE APPROVAL OF THE ENGINEER.
4. THE DEFLECTION TYPE CROSSING IS PREFERRED. SEE SPECIFICATIONS AND MANUFACTURER'S SUBMITTAL FOR MAXIMUM DEFLECTION ALLOWED.
5. A MINIMUM OF 12" VERTICAL SEPARATION BETWEEN WATER MAINS AND STORM SEWERS SHALL BE MAINTAINED. WHERE THIS IS NOT POSSIBLE WATER MAIN SHALL BE D.I.P. WITH NO LESS THAN 6" SEPARATION.

PRESSURE PIPE CONFLICT

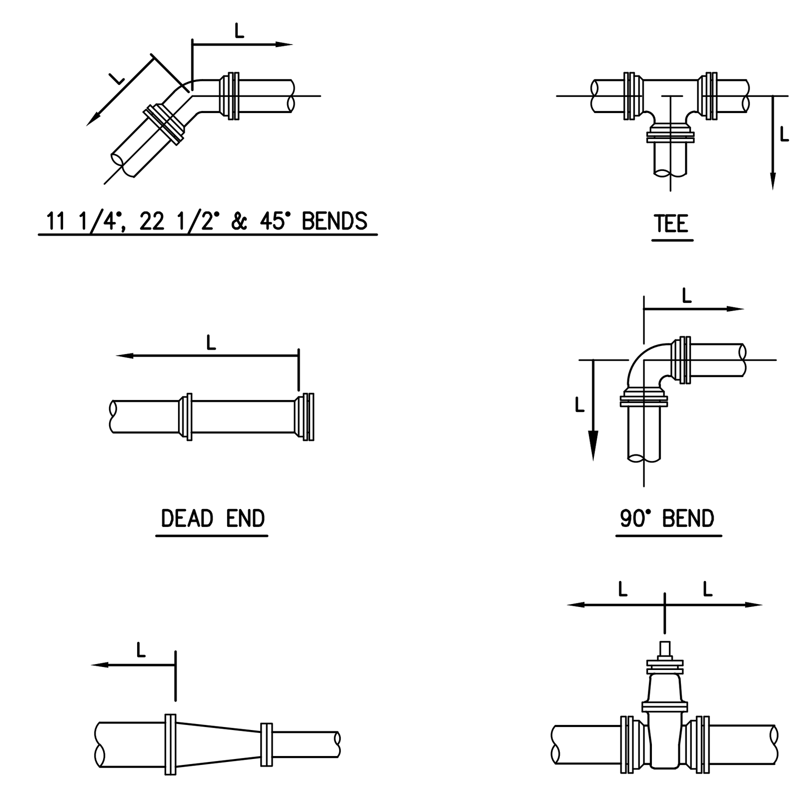

NOTES:

1. LENGTH 'L' IS IN FEET.
2. RESTRAINED LENGTHS ARE BASED ON THE FOLLOWING:
   - A. 150 PSI TEST PRESSURE
   - B. MIN. 30" COVER.
   - C. PVC – PIPE SIZES 4" – 12". PVC/DI
     DI – PIPE SIZES 4" – 48".
   - D. SANDY SOIL.
   - E. SAFETY FACTOR OF 1.5.
3. LENGTH 'L' SHOWN IN THE TABLE TO BE RESTRAINED IN THE DIRECTION OF THE ARROWS.

RESTRAINED PIPE JOINTS

FITTING TYPE		PIPE SIZE 4"	6"	8"	10"	12"	14"	16"	18"	20"	24"	30"	36"	42"	48"
90° HORIZ. BEND		17/14	24/20	31/25	36/30	42/35	40	44	49	53	61	71	80	89	96
45° HORIZ. BEND		7/6	10/8	13/11	15/12	18/15	16	18	20	22	25	29	33	37	40
22.5° HORIZ. BEND		3/3	5/4	6/5	7/6	8/7	8	9	10	10	12	14	16	18	19
11.25° HORIZ. BEND		2/1	2/2	3/3	4/3	4/3	4	4	5	5	6	7	8	9	10
45° VERT. OFFSET	UPPER BEND	19/12	27/17	35/22	42/27	50/32	36	40	44	48	55	67	77	86	95
	LOWER BEND	5/4	7/6	9/8	11/9	13/11	12	14	15	17	19	23	26	29	32
22.5° VERT. OFFSET	UPPER BEND	9/6	13/8	17/11	20/13	24/15	17	19	21	23	27	32	37	41	46
	LOWER BEND	2/2	3/3	4/4	5/4	6/5	6	7	7	8	9	11	13	14	15
11.25° VERT. OFFSET	UPPER BEND	5/3	6/4	8/5	10/6	12/7	9	10	11	12	13	16	18	21	23
	LOWER BEND	1/1	2/1	2/2	3/2	3/3	3	3	4	4	5	5	6	7	8
DEAD END AND INLINE VALVE		46/30	65/42	85/54	102/65	120/76	86	97	107	117	136	162	186	208	229
TEE (BRANCH RESTRAINT)	4"x	21/13	8/5	1/1	1/1	1/1	–	–	–	–	–	–	–	–	–
	6"x	–	39/25	30/19	20/13	10/7	1	1	1	1	1	1	–	–	–
	8"x	–	–	59/37	51/32	44/28	23	17	12	6	1	1	1	–	–
	10"x	–	–	–	75/47	69/44	40	35	31	26	17	1	1	–	–
	12"x	–	–	–	–	93/59	55	52	48	44	36	23	8	1	1
	14"x	–	–	–	–	–	69	66	63	59	53	41	29	15	1
	16"x	–	–	–	–	–	–	79	76	74	68	58	47	35	23
	18"x	–	–	–	–	–	–	–	89	86	81	73	63	53	42
	20"x	–	–	–	–	–	–	–	–	99	94	86	78	69	59
	24"x	–	–	–	–	–	–	–	–	–	117	111	104	97	88
	30"x	–	–	–	–	–	–	–	–	–	–	143	137	132	125
	36"x	–	–	–	–	–	–	–	–	–	–	–	167	162	157
	42"x	–	–	–	–	–	–	–	–	–	–	–	–	188	184
	48"x	–	–	–	–	–	–	–	–	–	–	–	–	–	209
REDUCER (LARGER PIPE RESTRAINT)	6"x	34/21	–	–	–	–	–	–	–	–	–	–	–	–	–
	8"x	61/39	34/23	–	–	–	–	–	–	–	–	–	–	–	–
	10"x	83/53	63/40	34/22	–	–	–	–	–	–	–	–	–	–	–
	12"x	104/66	87/55	64/40	59/37	–	–	–	–	–	–	–	–	–	–
	14"x	–	69	56	54	22	–	–	–	–	–	–	–	–	–
	16"x	–	82	71	69	41	22	–	–	–	–	–	–	–	–
	18"x	–	–	84	82	58	41	22	–	–	–	–	–	–	–
	20"x	–	–	–	95	73	58	41	22	–	–	–	–	–	–
	24"x	–	–	–	–	100	88	74	58	41	–	–	–	–	–
	30"x	–	–	–	–	134	125	114	102	88	57	–	–	–	–
	36"x	–	–	–	–	–	–	–	–	127	102	56	–	–	–
	42"x	–	–	–	–	–	–	–	–	159	138	101	54	–	–
	48"x	–	–	–	–	–	–	–	–	–	–	138	99	53	–

MECHANICAL THRUST RESTRAINT – MINIMUM PIPE LENGTHS

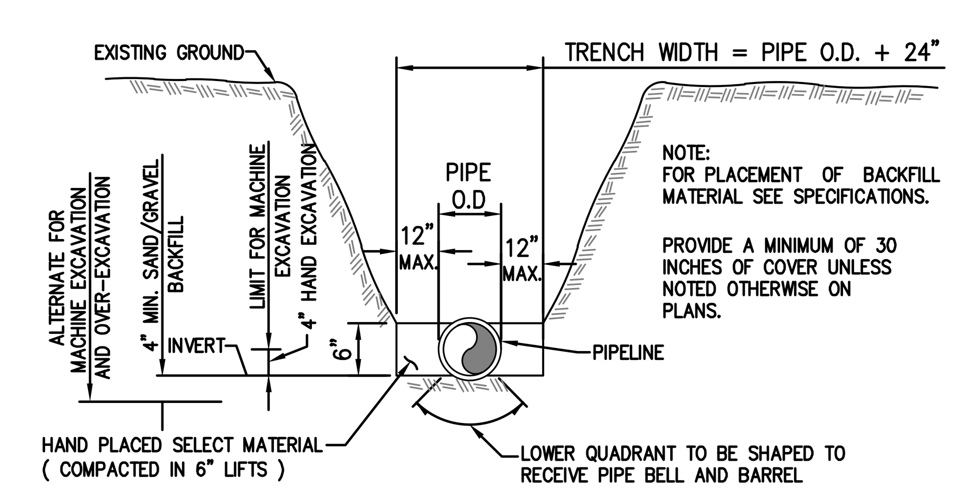

NOTE:
FOR PLACEMENT OF BACKFILL MATERIAL SEE SPECIFICATIONS.

PROVIDE A MINIMUM OF 30 INCHES OF COVER UNLESS NOTED OTHERWISE ON PLANS.

TRENCHING

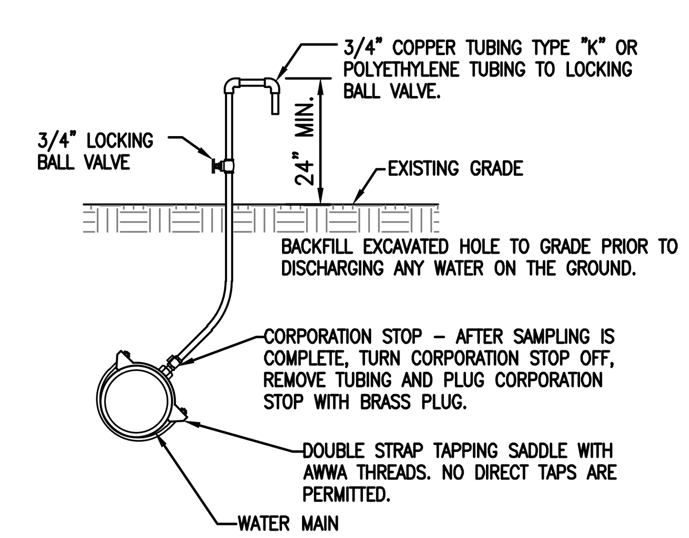

SAMPLING POINT

DATE: Jun 13, 2016 – 12:06pm R:\Engineering\2015\15-0006-001-Lake Worth Continuing Services\004-11th to 12th Water & Sewer- TO#6\Drawings\15-0006-001-04-WATER DET.dwg

R:\Engineering\2015\15-0006-001-Lake Worth Continuing Services\004-11th to 12th Water & Sewer- TO#6\Drawings\15-0006-001-04-WATER DET.dwg [C-5] Jun 13, 2016 12:06pm JWEST

Matthew J. Cigale
Florida P.E. No. 74584

CITY PROJECT NO. LS 1609
CTA JOB No. 15-0006-001-04
TASK ORDER NO. 6

REVISIONS					
DATE	BY	DESCRIPTION	DATE	BY	DESCRIPTION

	NAME	DATE		NAME	DATE
DESIGNED BY			DRAWN BY		
CHECKED BY			CHECKED BY		
SUPERVISED BY:					

CRAVEN • THOMPSON AND ASSOCIATES, INC.
ENGINEERS • PLANNERS • SURVEYORS
3563 N.W. 53RD STREET, FORT LAUDERDALE, FLORIDA 33309
FAX: (954) 739-6409 TEL.: (954) 739-6400
FLORIDA LICENSED ENGINEERING, SURVEYING & MAPPING BUSINESS No. 271
FLORIDA LICENSED LANDSCAPE ARCHITECTURE BUSINESS No. C000114

NEW SANITARY GRAVITY SEWER INSTALLATION & WATER MAIN RE-PLACEMENT FROM 10TH TO 12TH AVE. SOUTH IN ALLEY BETWEEN B & C ST.
PREPARED FOR:
CITY OF LAKE WORTH

WATER DETAILS

SHEET NO.
C-5

TAPPING SADDLE 1" – JCM 404-CC

MATERIAL & PARTS PER CITY OF LAKE WORTH APPROVED PRODUCTS LIST
MULLERS PARTS MATERIAL OR A. Y. McDONALD OR FORD METER ONLY

	MULLER
CORPORATION STOP	P-25008
CURB STOP	P-14258
ANGLE CURB STOP	P-14258
METER COUPLING – 3/4" OR 1"	H-10890
U-BRANCH CONNECTION – 1"x 3/4"x 6 1/2"	P-15363

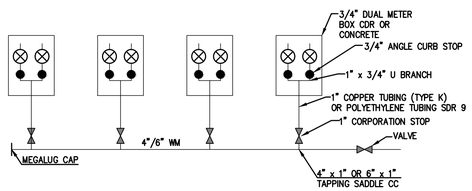

MULTIPLE WATER SERVICES

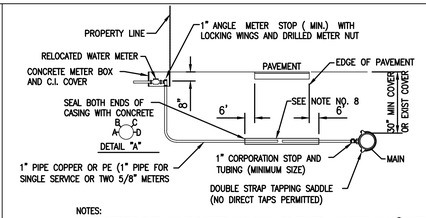

NOTES:

1. SUCCESSIVE TAPS INTO THE WATER MAIN SHALL BE SPACED A MINIMUM OF 18". OFFSET AND AT 45° FROM THE CENTERLINE (ON MAINS WITH GREATER THAN 30" OF COVER. SEE DETAIL 'A').
2. WHERE NO SIDEWALK EXISTS, METER BOXES SHALL BE SET TO CONFORM TO FINISH GRADE..
3. COPPER TUBING SHALL BE TYPE "K" WITH COMPRESSION FITTINGS. POLYETHYLENE TUBING SHALL BE SDR 9, COPPER SIZE TUBING.
4. ROTATE THE CORPORATION STOP SO THAT THE OPERATING NUT IS ACTUATED FROM THE VERTICAL POSITION RATHER THAN THE HORIZONTAL.
5. COPPER SERVICE LINES SHALL BE CONTINUOUS FROM CORPORATION STOP TO ANGLE METER STOP WITH NO FITTINGS IN BETWEEN.
6. TAPPING SADDLES AND CORPORATION STOPS SHALL HAVE CC THREADS.
7. SERVICE CASING SHALL NOT BE INSTALLED BY WATER JETTING UNDER ROADWAY.
8. GALVANIZED CASING REQUIRED FOR JACK AND BORE IN MOST CASES, SCHEDULE 40 PVC MAY BE USED WITH THE APPROVAL OF THE ENGINEER . CASING SHOULD EXTEND SIX (6) FEET BEYOND EDGE OF PAVEMENT AND SIZED AS FOLLOWS
   A. 1" SERVICE USE 2" CASING
   B. 2" SERVICE USE 4" CASING
9. METER BOX TO BE SET DIRECTLY BEHIND EXISTING OR PROPOSED SIDEWALK (ON PRIVATE PROPERTY) AND TWO FEET INSIDE SIDE PROPERTY LINE ON EITHER SIDE OF PROPERTY.
10. PIPING LAYOUT SHOWN IS TYPICAL FOR 2" SERVICE.

WATER SERVICE FOR 1" OR 2" PIPE

TO PUT CONTINUOUS TRACE WIRE UNDER BOLT, FIRST LOOSEN BOLT. THEN STRIP 3" MIN., WRAP ONCE AROUND BOLT, 1 TWIST, 2 WRAPS. DO "NOT CUT WIRE" TIGHTEN BOLT AFTER WRAPPING TRACE WIRE AROUND THE BOLT.

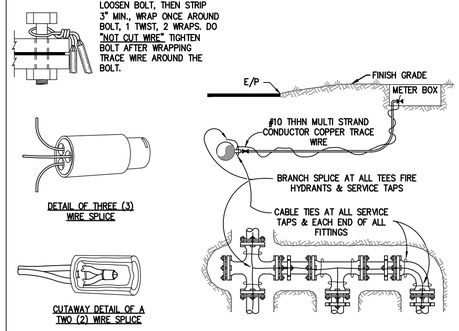

NOTES:

1. TRACE WIRE IS REQUIRED ON ALL NON METALLIC PIPE.
2. INCLUDE ALL COST OF MATERIAL & LABOR IN PRICE OF PIPE.
3. CONTRACTOR IS RESPONSIBLE FOR CONTINUITY OF ALL TRACE WIRE.
4. WIRE SPLICE CONNECTORS SHALL BE DRY-CON DIRECT BURY LUG BY KING INNOVATIONS, DS-500 DRI-SPLICE BY SPEARS OR DIRECT BURY PRODUCTS BY 3M

TRACE WIRE

FOR THE PURPOSE OF THIS SECTION, THE PHRASE "WATER MAINS" SHALL MEAN MAINS, INCLUDING TREATMENT PLANT PROCESS PIPING, CONVEYING EITHER RAW, PARTIALLY TREATED, OR FINISHED DRINKING WATER; FIRE HYDRANT LEADS; AND SERVICE LINES THAT ARE UNDER THE CONTROL OF A PUBLIC WATER SYSTEM AND THAT HAVE AN INSIDE DIAMETER OF THREE INCHES OR GREATER.

HORIZONTAL SEPARATION BETWEEN UNDERGROUND WATERMAINS AND SANITARY OR STORM SEWERS, WASTEWATER OR STORMWATER FORCE MAINS, RECLAIMED WATER PIPELINES AND ON SITE SEWAGE TREATMENT AND DISPOSAL SYSTEMS.

1. NEW OR RELOCATED UNDERGROUND WATERMAINS SHALL BE LAID TO PROVIDE A HORIZONTAL DISTANCE OF AT LEAST THREE FEET BETWEEN THE OUTSIDE OF THE WATERMAIN AND THE OUTSIDE OF ANY EXISTING OR PROPOSED SEWER, STORMWATER FORCEMAIN, OR PIPELINE CONVEYING RECLAIMED WATER REGULATED UNDER PART III OF CHAPTER 2-610, F.A.C.
2. NEW OR RELOCATED UNDERGROUND WATERMAINS SHALL BE LAID TO PROVIDE A HORIZONTAL DISTANCE OF AT LEAST THREE FEET, AND PREFERABLY TEN FEET, BETWEEN THE OUTSIDE OF THE WATERMAIN AND THE OUTSIDE OF ANY EXISTING OR PROPOSED VACUUM-TYPE SANITARY SEWER.
3. NEW OR RELOCATED UNDERGROUND WATERMAINS SHALL BE LAID TO PROVIDE A HORIZONTAL DISTANCE OF AT LEAST SIX, AND PREFERABLY TEN FEET, BETWEEN THE OUTSIDE OF THE WATERMAIN AND THE OUTSIDE OF ANY EXISTING OR PROPOSED GRAVITY OR PRESSURE TYPE SANITARY SEWER, WASTEWATER FORCEMAIN, OR PIPELINE CONVEYING RECLAIMED WATER NOT REGULATED UNDER PART III OF CHAPTER 62-610, F.A.C. THE MINIMUM HORIZONTAL SEPARATION BETWEEN WATERMAINS AND GRAVITY TYPE SANITARY SEWERS SHALL BE REDUCED TO THREE FEET WHERE THE BOTTOM OF THE WATERMAIN IS LAID AT LEAST SIX INCHES ABOVE THE TOP OF THE SEWER.
4. NEW OR RELOCATED UNDERGROUND WATERMAINS SHALL BE LAID TO PROVIDE A MINIMUM HORIZONTAL DISTANCE OF AT LEAST TEN FEET BETWEEN THE OUTSIDE OF THE WATERMAIN AND ALL PARTS OF ANY EXISTING OR PROPOSED ONSITE SEWAGE TREATMENT AND DISPOSAL SYSTEM AS DEFINED IN SECTION 381.0065(2), F.S. AND RULE 64E-6.002, F.A.C.

VERTICAL SEPARATION BETWEEN UNDERGROUND WATERMAINS AND SANITARY OR STORM SEWERS, WASTEWATER OR STORMWATER FORCEMAINS, AND RECLAIMED WATER PIPELINES.

1. NEW OR RELOCATED UNDERGROUND WATERMAINS CROSSING ANY EXISTING OR PROPOSED GRAVITY OR VACUUM TYPE SANITARY OR STORM SEWER SHALL BE LAID SO THE OUTSIDE OF THE WATERMAIN IS AT LEAST SIX INCHES, AND PREFERABLY TWELVE INCHES ABOVE, OR AT LEAST TWELVE INCHES BELOW THE OUTSIDE OF THE OTHER PIPELINE. HOWEVER, IT IS PREFERABLE TO LAY THE WATERMAIN ABOVE THE OTHER PIPELINE.
2. NEW OR RELOCATED UNDERGROUND WATERMAINS CROSSING ANY EXISTING OR PROPOSED PRESSURE TYPE SANITARY SEWER, WASTEWATER OR STORMWATER FORCE MAIN, OR PIPE LINE CONVEYING RECLAIMED WATER SHALL BE LAID SO THE OUTSIDE OF THE WATERMAIN IS AT LEAST TWELVE INCHES ABOVE OR BELOW THE OUTSIDE OF THE OTHER PIPELINE. HOWEVER, IT IS PREFERABLE TO LAY THE WATERMAIN ABOVE THE OTHER PIPELINE.
3. AT THE UTILITY CROSSING DESCRIBED IN PARAGRAPH 1 AND 2 ABOVE, ONE FULL LENGTH OF WATER MAIN PIPE SHALL BE CENTERED ABOVE OR BELOW THE OTHER PIPELINE SO THE WATERMAIN JOINTS SHALL BE AS FAR AS POSSIBLE FROM THE OTHER PIPELINE. ALTERNATIVELY, AT SUCH CROSSINGS, THE PIPES SHALL BE ARRANGED SO THAT ALL WATERMAIN JOINTS ARE AT LEAST THREE FEET FROM ALL JOINTS IN VACUUM TYPE SANITARY SEWER, STORM SEWERS, STORMWATER FORCEMAINS, OR PIPELINES CONVEYING RECLAIMED WATER REGULATED UNDER PART III OF CHAPTER 62-610, F.A.C., AND AT LEAST SIX FEET FROM ALL JOINTS IN GRAVITY OR PRESSURE TYPE SANITARY SEWERS, WASTEWATER FORCEMAINS, OR PIPELINES CONVEYING RECLAIMED WATER NOT REGULATED UNDER PART III OF CHAPTER III 62-610, F.A.C.
4. WHERE 12" VERTICAL SEPARATION BETWEEN POTABLE WATER MAINS AND SANITARY OR STORM SEWERS CANNOT BE MAINTAINED, A 20 LINEAR FOOT SEGMENT OF DUCTILE IRON PIPE WATER MAIN WILL BE INSTALLED ON CENTER OVER THE CONFLICT.

WATER AND SEWER SEPARATION CRITERIA

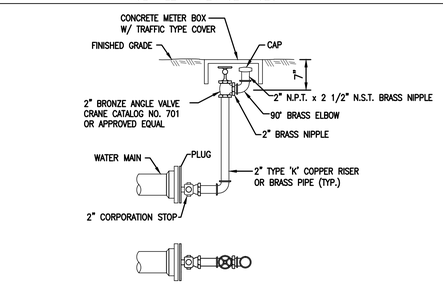

NOTES:

1. GALVANIZED PIPING AND FITTINGS SHALL NOT BE USED ON TEMPORARY OR PERMANENT BLOWOFFS.
2. MEGALUG RESTRAINED JOINTS REQUIRED ON WATERMAIN.

2" TERMINAL BLOWOFF

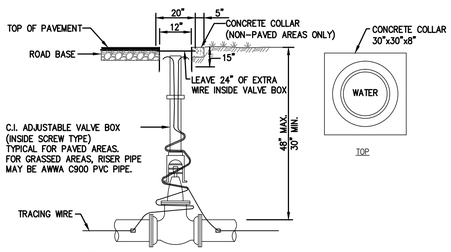

NOTES:

1. TOP OF LID MUST BE FLUSH WITH PAVEMENT OR CONCRETE COLLAR.
2. WHEN VALVE IS DEEPER THAN 36" AN EXTENSION WILL BE REQUIRED TO BRING OPERATING NUT TO 24" OF FINISHED GRADE. EXTENSION MUST BE SET SCREW TYPE AND ATTACHED TO OPERATING NUT.
3. OUTSIDE BOX SHALL BE UNITED STATES FOUNDRY NO. 7630 WITH TYPE FD LID. LID SHALL BE CAST WITH THE WORDS: "WATER" OR "RAW WATER".
4. USE NYLON CABLE TIES TO SECURE TRACE WIRE TO OUTSIDE OF VALVE EXTENSION AND CABLE TIE BEHIND EACH BELL.
5. SEE NOTES ON DETAIL NO. 3, THIS SHEET.

VALVE SETTING

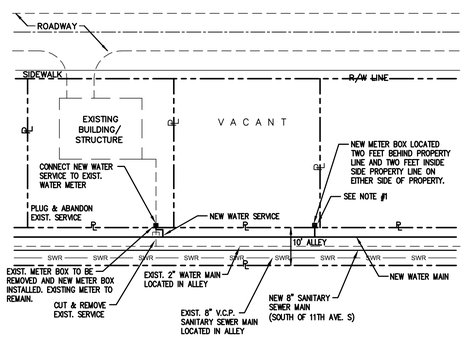

1. WATER SERVICES SHALL BE PROVIDED TO ALL VACANT LOTS AND SHALL BE ENDED WITH CURB STOPS SET WITHIN METER BOX.
2. SINGLE WATER SERVICES PROVIDED TO SERVE SINGLE LOTS SHALL BE LOCATED / ENDED WITHIN A METER BOX AT 2 FEET (TYPICALLY) FROM THE PROPERTY CORNER.
3. SINGLE AND DOUBLE WATER SERVICES EXTENDING BENEATH THE ROADWAY TO SERVE TWO LOTS SHALL BE 1" IN DIAMETER.
4. EXISTING METER BOXES MAY BE BURIED OR DIFFICULT TO FIND. CONTRACTOR SHALL MAKE EXPLORATIONS NECESSARY TO LOCATE METERS AND FIELD VERIFY LOCATION OF EXISTING WATER METERS AND SERVICES PRIOR TO INSTALLATION OF NEW SERVICE FROM NEW WATER MAIN.
5. CONTRACTOR SHALL RESTORE EXISTING DRIVEWAYS, WALKWAYS, SOD, WALLS, FENCES, ETC. ON PRIVATE PROPERTY AS A RESULT OF NEW WATER SERVICE CONNECTION TO EXISTING.

ONLY DAMAGED EXISTING METER BOXES SHALL BE REMOVED AND RE-PLACED. PRIOR TO ORDERING NEW METER BOXES, CONTRACTOR SHALL FIELD VERIFY LOCATION OF EXISTING METER BOXES AND DETERMINE WITH CITY REPRESENTATIVE AND ENGINEER WHICH METER BOXES ARE DAMAGED AND IN NEED OF RE-PLACEMENT.

WATER SERVICE CONNECTION DETAIL (EXISTING METER BOX TO REMOVED & RE-PLACED)

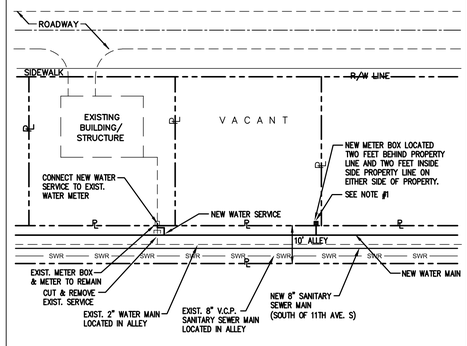

1. WATER SERVICES SHALL BE PROVIDED TO ALL VACANT LOTS AND SHALL BE ENDED WITH CURB STOPS SET WITHIN METER BOX.
2. SINGLE WATER SERVICES PROVIDED TO SERVE SINGLE LOTS SHALL BE LOCATED / ENDED WITHIN A METER BOX AT 2 FEET (TYPICALLY) FROM THE PROPERTY CORNER.
3. SINGLE AND DOUBLE WATER SERVICES EXTENDING BENEATH THE ROADWAY TO SERVE TWO LOTS SHALL BE 1" IN DIAMETER.
4. EXISTING METER BOXES MAY BE BURIED OR DIFFICULT TO FIND. CONTRACTOR SHALL MAKE EXPLORATIONS NECESSARY TO LOCATE METERS AND FIELD VERIFY LOCATION OF EXISTING WATER METERS AND SERVICES PRIOR TO INSTALLATION OF NEW SERVICE FROM NEW WATER MAIN.
5. CONTRACTOR SHALL RESTORE EXISTING DRIVEWAYS, WALKWAYS, SOD, WALLS, FENCES, ETC. ON PRIVATE PROPERTY AS A RESULT OF NEW WATER SERVICE CONNECTION TO EXISTING.

ONLY DAMAGED EXISTING METER BOXES SHALL BE REMOVED AND RE-PLACED. PRIOR TO ORDERING NEW METER BOXES, CONTRACTOR SHALL FIELD VERIFY LOCATION OF EXISTING METER BOXES AND DETERMINE WITH CITY REPRESENTATIVE AND ENGINEER WHICH METER BOXES ARE DAMAGED AND IN NEED OF RE-PLACEMENT.

WATER SERVICE CONNECTION DETAIL (EXISTING METER BOX TO REMAIN)

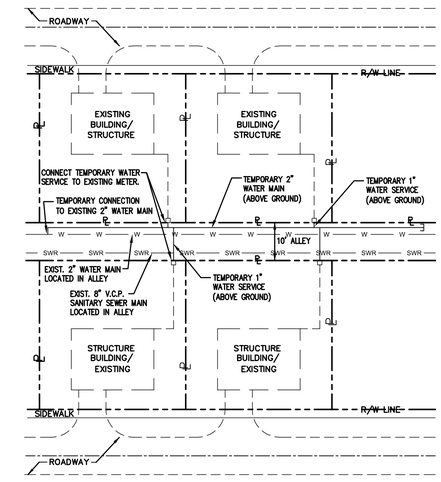

1. CONTRACTOR IS RESPONSIBLE FOR CONSTRUCTING, COORDINATING AND MAINTAINING TEMPORARY WATER MAIN AND TEMPORARY WATER SERVICES INCLUDING CONNECTING TEMPORARY WATER SERVICES TO EXISTING WATER METERS.
2. CONTRACTOR SHALL COORDINATE THE SHUTDOWN OF EXISTING WATER SERVICE WITH THE CITY OF LAKE WORTH AND THE AFFECTED RESIDENTS. OTHER THAN APPROVED SHUTDOWN HOURS BY THE CITY OF LAKE WORTH, EXISTING WATER SERVICES MUST BE MAINTAINED AND OPERATIONAL THROUGHOUT CONSTRUCTION.
3. EXISTING METER BOXES MAY BE BURIED OR DIFFICULT TO FIND. CONTRACTOR SHALLL MAKE FIELD EXPLORATIONS NECESSARY TO LOCATE EXISTING WATER METERS.
4. CONTRACTOR TO MAKE NECESSARY RELOCATIONS/ADJUSTMENTS TO TEMPORARY WATER MAIN AND SERVICES (AS REQUIRED) IN ORDER TO FACILITATE CONSTRUCTION OF PROPOSED WATER AND SANITARY SEWER IMPROVEMENTS.

TEMPORARY WATER SERVICE CONNECTION DETAIL

Matthew J. Cigale
Florida P.E. No. 74584

CITY PROJECT NO. LS 1609
CTA JOB No. 15-0006-001-04
TASK ORDER NO. 6

REVISIONS					
DATE	BY	DESCRIPTION	DATE	BY	DESCRIPTION

	NAME	DATE		NAME	DATE
DESIGNED BY			DRAWN BY		
CHECKED BY			CHECKED BY		
SUPERVISED BY:					

CRAVEN • THOMPSON AND ASSOCIATES, INC.
ENGINEERS • PLANNERS • SURVEYORS
3563 N.W. 53RD STREET, FORT LAUDERDALE, FLORIDA 33309
FAX: (954) 739-6409 TEL.: (954) 739-6400
FLORIDA LICENSED ENGINEERING, SURVEYING & MAPPING BUSINESS No. 271
FLORIDA LICENSED LANDSCAPE ARCHITECTURE BUSINESS No. C000114

NEW SANITARY GRAVITY SEWER INSTALLATION & WATER MAIN RE-PLACEMENT FROM 10TH TO 12TH AVE. SOUTH IN ALLEY BETWEEN B & C ST.
PREPARED FOR:
CITY OF LAKE WORTH

WATER DETAILS

SHEET NO.
C-6

R:\Engineering\2015\15-0006-001-Lake Worth Continuing Services\004-11th to 12th Water & Sewer- TO#6\Drawings\15-0006-001-04-WATER DET.dwg [C-6] Jun 17, 2016 11:01am MCIGALE

DATE: Jun 17, 2016 - 11:01am R:\Engineering\2015\15-0006-001-Lake Worth Continuing Services\004-11th to 12th Water & Sewer- TO#6\Drawings\15-0006-001-04-WATER DET.dwg

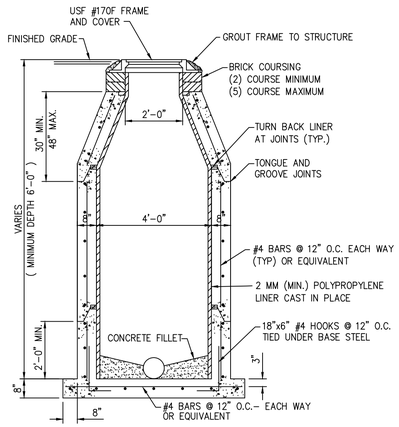

STANDARD MANHOLE | 1

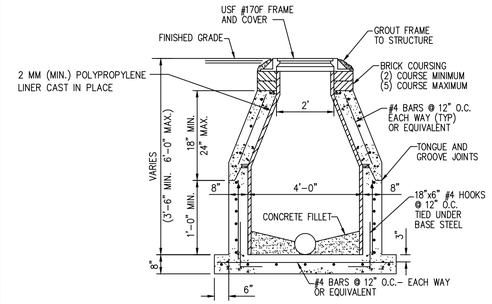

SHALLOW MANHOLE | 2

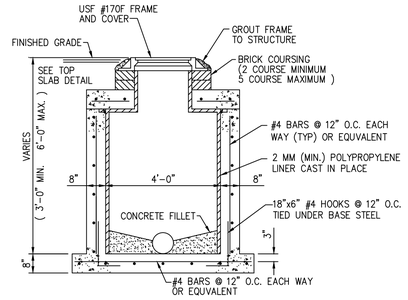

SHALLOW MANHOLE | 3

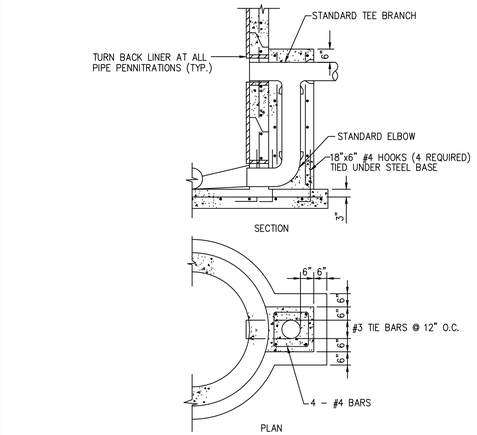

DROP CONNECTION | 4

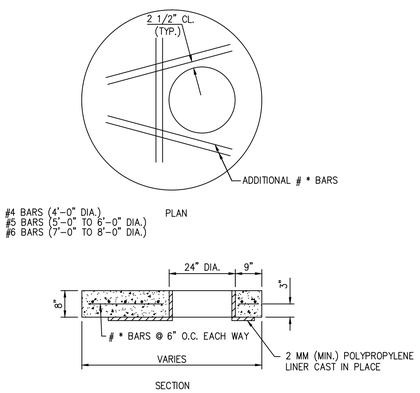

FLAT TOP SLAB | 5

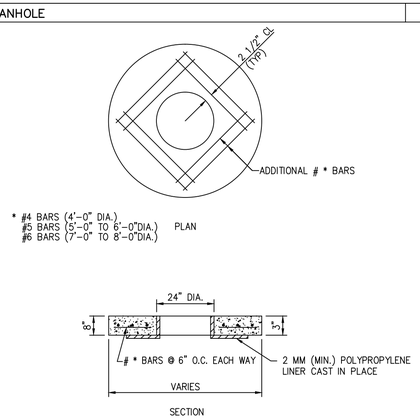

FLAT TOP SLAB | 6

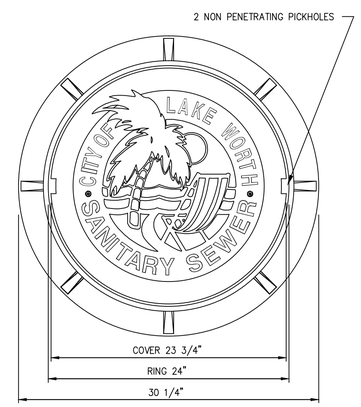

USF 170 RING & EU COVER | 7

NOTE: CITY TO DESIGNATE WHICH MANHOLE RING & COVER TO USE BASED ON LOCATION.

USF 750 RING & NH COVER | 8

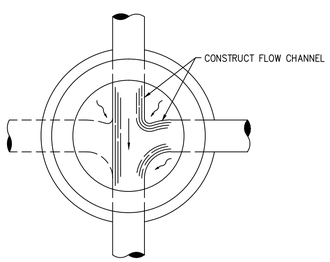

MANHOLE BOTTOM FOR TWO OR MORE INFLUENT LINES | 9

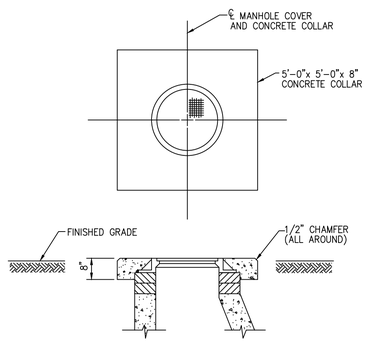

CONCRETE COLLAR (REQUIRED WHEN MANHOLE IS OUT OF PAVEMENT) | 11

1. REINFORCING STEEL ON ALL CONCRETE STRUCTURES SHALL HAVE A MINIMUM COVER OF 3 INCHES.
2. BRICK COURSING ON MANHOLES SHALL BE PLASTERED WITH 1/2 INCH CEMENT MORTAR ON THE INSIDE AND OUTSIDE FACES.
3. THE DISTANCES AND CONTROLS SHOWN ON THE DRAWINGS REFER TO THE CENTERLINE OF THE MANHOLES.
4. COAT EXTERIOR AND INTERIOR SURFACES OF MANHOLES WITH TWO COATS (1ST COAT RED, 2ND COAT BLACK–8 MILS EACH COAT) OF AGRU SUREGRIP, KERNEOS SEWPERCOAT OR EQUAL APPROVED BY THE ENGINEER. PROVIDE A MINIMUM DRY FILM THICKNESS OF 16 MILS. APPLY IN STRICT ACCORDANCE WITH THE MANUFACTURER'S RECOMMENDATIONS. INTERIOR COATING SHALL BE FIELD APPLIED AFTER FINAL LAMPING AND REVIEW BY THE ENGINEER.
5. STEPS ARE REQUIRED IN MANHOLES GREATER THAN 3 FEET IN DEPTH. STEPS SHALL BE SPACED 16 INCHES ON CENTER AND SHALL BE POLYPROPYLENE PLASTIC COATED NO.3 AS MANUFACTURED BY MA INDUSTRIES, INC. OR EQUAL APPROVED BY THE ENGINEER.
6. PVC FORCE MAIN PIPE SHALL BE WRAPPED WITH WIRE FOR LOCATING PURPOSES. A 14 GAUGE, THIN INSULATED, SOLID COPPER WIRE SHALL BE LAID IN THE PIPE TRENCH CONTINUOUS FROM VALVE BOX TO VALVE BOX. WIRE SHALL BE WRAPPED TWO TIMES AROUND EACH JOINT OF PIPE AND EXTENDED INSIDE EACH VALVE BOX TO ENABLE LOCATION DEVICES TO BE ATTACHED WITHOUT DIGGING UP THE VALVE BOX . WIRE CONNECTIONS SHALL BE MADE WITH COMMERCIAL CONNECTORS AND SEALED AGAINST MOISTURE WITH SCOTCH E–Z SEAL NO.2200 ELECTRICAL INSULATING PAD WITH VINYL BACKING.
7. DROP CONNECTIONS ON MANHOLES ARE REQUIRED WHENEVER AN INFLUENT SEWER IS LOCATED 2 FEET OR MORE ABOVE THE MAIN INVERT CHANNEL.
8. CAST IRON MANHOLE COVERS SHALL HAVE THE WORD 'SANITARY' CAST IN THEM IN RAISED LETTERS.

GENERAL NOTES | 12

Matthew J. Cigale
Florida P.E. No. 74584

CITY PROJECT NO. LS 1609
CTA JOB No. 15-0006-001-04
TASK ORDER NO. 6

REVISIONS					
DATE	BY	DESCRIPTION	DATE	BY	DESCRIPTION

	NAME	DATE		NAME	DATE
DESIGNED BY			DRAWN BY		
CHECKED BY			CHECKED BY		
SUPERVISED BY:					

CRAVEN • THOMPSON AND ASSOCIATES, INC.
ENGINEERS • PLANNERS • SURVEYORS
3563 N.W. 53RD STREET, FORT LAUDERDALE, FLORIDA 33309
FAX: (954) 739–6409 TEL.: (954) 739–6400
FLORIDA LICENSED ENGINEERING, SURVEYING & MAPPING BUSINESS No. 271
FLORIDA LICENSED LANDSCAPE ARCHITECTURE BUSINESS No. C000114

NEW SANITARY GRAVITY SEWER INSTALLATION & WATER MAIN RE-PLACEMENT FROM 10TH TO 12TH AVE. SOUTH IN ALLEY BETWEEN B & C ST.
PREPARED FOR:
CITY OF LAKE WORTH

SANITARY SEWER DETAILS

SHEET NO.
C-7

R:\Engineering\2015\15-0006-001-Lake Worth Continuing Services\004-11th to 12th Water & Sewer- TO#6\Drawings\15-0006-001-04-SSDETAILS.dwg [C-7] Jun 13, 2016 11:49am JMEST

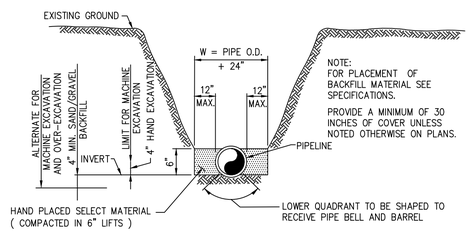

TRENCHING | 1

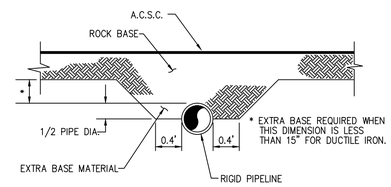

EXTRA BASE MATERIAL FOR SHALLOW PIPES IN ROADWAYS | 2

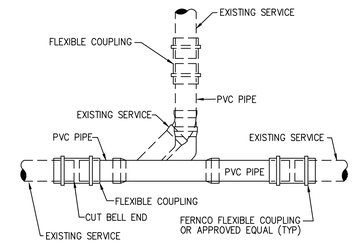

PIPE SECTION REPLACEMENT | 3

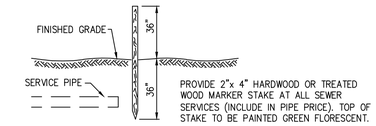

MARKER STAKE | 4

HORIZONTAL SEPARATION BETWEEN UNDERGROUND WATERMAINS AND SANITARY OR STORM SEWERS, WASTEWATER OR STORMWATER FORCE MAINS, RECLAIMED WATER PIPELINES AND ON SITE SEWAGE TREATMENT AND DISPOSAL SYSTEMS.

1. *NEW OR RELOCATED UNDERGROUND WATERMAINS SHALL BE LAID TO PROVIDE A HORIZONTAL DISTANCE OF AT LEAST THREE FEET BETWEEN THE OUTSIDE OF THE WATERMAIN AND THE OUTSIDE OF ANY EXISTING OR PROPOSED SEWER, STORMWATER FORCEMAIN, OR PIPELINE CONVEYING RECLAIMED WATER REGULATED UNDER PART III OF CHAPTER 2-610, F.A.C.*
2. *NEW OR RELOCATED UNDERGROUND WATERMAINS SHALL BE LAID TO PROVIDE A HORIZONTAL DISTANCE OF AT LEAST THREE FEET, AND PREFERABLY TEN FEET, BETWEEN THE OUTSIDE OF THE WATERMAIN AND THE OUTSIDE OF ANY EXISTING OR PROPOSED VACUUM-TYPE SANITARY SEWER.*
3. *NEW OR RELOCATED UNDERGROUND WATERMAINS SHALL BE LAID TO PROVIDE A HORIZONTAL DISTANCE OF AT LEAST SIX, AND PREFERABLY TEN FEET, BETWEEN THE OUTSIDE OF THE WATERMAIN AND THE OUTSIDE OF ANY EXISTING OR PROPOSED GRAVITY OR PRESSURE TYPE SANITARY SEWER, WASTEWATER FORCEMAIN, OR PIPELINE CONVEYING RECLAIMED WATER NOT REGULATED UNDER PART III OF CHAPTER 62-610, F.A.C. THE MINIMUM HORIZONTAL SEPARATION BETWEEN WATERMAINS AND GRAVITY TYPE SANITARY SEWERS SHALL BE REDUCED TO THREE FEET WHERE THE BOTTOM OF THE WATERMAIN IS LAID AT LEAST SIX INCHES ABOVE THE TOP OF THE SEWER.*
4. *NEW OR RELOCATED UNDERGROUND WATERMAINS SHALL BE LAID TO PROVIDE A MINIMUM HORIZONTAL DISTANCE OF AT LEAST TEN FEET BETWEEN THE OUTSIDE OF THE WATERMAIN AND ALL PARTS OF ANY EXISTING OR PROPOSED ON-SITE SEWAGE TREATMENT AND DISPOSAL SYSTEM' AS DEFINED IN SECTION 381.0065(2), F.S. AND RULE 64E-6.002, F.A.C.*

VERTICAL SEPARATION BETWEEN UNDERGROUND WATERMAINS AND SANITARY OR STORM SEWERS, WASTEWATER OR STORMWATER FORCEMAINS, AND RECLAIMED WATER PIPELINES.

1. *NEW OR RELOCATED UNDERGROUND WATERMAINS CROSSING ANY EXISTING OR PROPOSED GRAVITY OR VACUUM TYPE SANITARY OR STORM SEWER SHALL BE LAID SO THE OUTSIDE OF THE WATERMAIN IS AT LEAST SIX INCHES, AND PREFERABLY TWELVE INCHES ABOVE, OR AT LEAST TWELVE INCHES BELOW THE OUTSIDE OF THE OTHER PIPELINE. HOWEVER, IT IS PREFERABLE TO LAY THE WATERMAIN ABOVE THE OTHER PIPELINE.*
2. *NEW OR RELOCATED UNDERGROUND WATERMAINS CROSSING ANY EXISTING OR PROPOSED PRESSURE TYPE SANITARY SEWER, WASTEWATER OR STORMWATER FORCE MAIN, OR PIPE LINE CONVEYING RECLAIMED WATER SHALL BE LAID SO THE OUTSIDE OF THE WATERMAIN IS AT LEAST TWELVE INCHES ABOVE OR BELOW THE OUTSIDE OF THE OTHER PIPELINE. HOWEVER, IT IS PREFERABLE TO LAY THE WATERMAIN ABOVE THE OTHER PIPELINE.*
3. *AT THE UTILITY CROSSING DESCRIBED IN PARAGRAPH 1 AND 2 ABOVE, ONE FULL LENGTH OF WATERMAIN PIPE SHALL BE CENTERED ABOVE OR BELOW THE OTHER PIPELINE SO THE WATERMAIN JOINTS SHALL BE AS FAR AS POSSIBLE FROM THE OTHER PIPELINE. ALTERNATIVELY, AT SUCH CROSSINGS, THE PIPES SHALL BE ARRANGED SO THAT ALL WATERMAIN JOINTS ARE AT LEAST THREE FEET FROM ALL JOINTS IN VACUUM TYPE SANITARY SEWER, STORM SEWERS, STORMWATER FORCEMAINS, OR PIPELINES CONVEYING RECLAIMED WATER REGULATED UNDER PART III OF CHAPTER 62-610, F.A.C., AND AT LEAST SIX FEET FROM ALL JOINTS IN GRAVITY OR PRESSURE TYPE SANITARY SEWERS, WASTEWATER FORCEMAINS, OR PIPELINES CONVEYING RECLAIMED WATER NOT REGULATED UNDER PART III OF CHAPTER III 62-610, F.A.C.*

WATER AND SEWER SEPARATION CRITERIA | 5

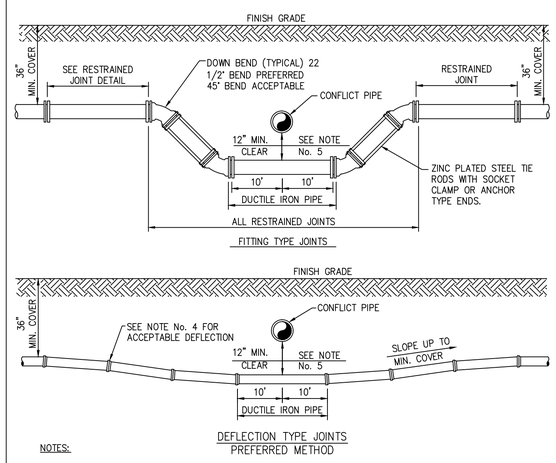

NOTES:

1. THERE SHALL BE, IN ALL CASES, A MINIMUM OF 12" SEPARATION BETWEEN WATER MAINS AND FORCE MAINS.
2. WHEREVER POSSIBLE WATER MAINS SHALL PASS OVER FORCE MAINS OR STORM SEWERS.
3. FITTINGS SHALL BE RESTRAINED WITH MEGALUGS AND TIE RODS BETWEEN OFFSET FITTINGS. THRUST BLOCKS SHALL ONLY BE USED WITH THE APPROVAL OF THE ENGINEER.
4. THE DEFLECTION TYPE CROSSING IS PREFERRED. SEE SPECIFICATIONS AND MANUFACTURER'S SUBMITTAL FOR MAXIMUM DEFLECTION ALLOWED.
5. A MINIMUM OF 12" VERTICAL SEPARATION BETWEEN WATER MAINS AND STORM SEWERS SHALL BE MAINTAINED. WHERE THIS IS NOT POSSIBLE WATER MAIN SHALL BE D.I.P. WITH NO LESS THAN 6" SEPARATION.

PRESSURE PIPE CONFLICT | 6

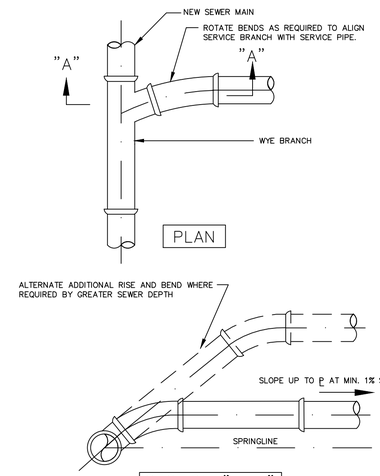

NOTES:

1. SINGLE SERVICE CONNECTIONS SHALL USE 6" PIPE AND FITTINGS.
2. USE RISER CONNECTIONS WHERE INVERT OF SEWER IS MORE THAN 7'-0" DEEP.
3. WHERE BELL OF WYE AND SPIGOT OF EXISTING MAIN ARE NOT COMPATIBLE, USE A SECOND FLEXIBLE COUPLING.
4. RIGID COUPLINGS ARE ALSO ACCEPTABLE.
5. CONNECTION SHALL NOT BE MADE BELOW SPRINGLINE OF MAIN.

WYE SERVICE CONNECTION

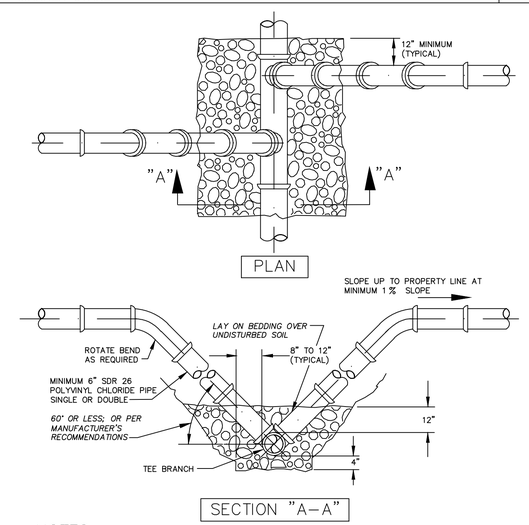

NOTES:

1. MODIFIED RISER CONNECTION TO BE USED ONLY WHEN DIRECTED BY ENGINEER.
2. FLOWABLE FILL OR SMALL DIAMETER PEA ROCK, AS DIRECTED BY ENGINEER SHALL BE USED AS BEDDING OVER UNDISTURBED SOIL, FOR POLYVINYL CHLORIDE PIPE, AT WYE CONNECTION TO MAIN.
3. USE OF VERTICAL RISERS (RISERS GREATER THAN 45 DEGREES) ARE NOT ALLOWED ON DEPTHS GREATER THAN 12 FEET WITHOUT SPECIAL DESIGN CONSIDERATIONS.

MODIFIED RISER SERVICE CONNECTION

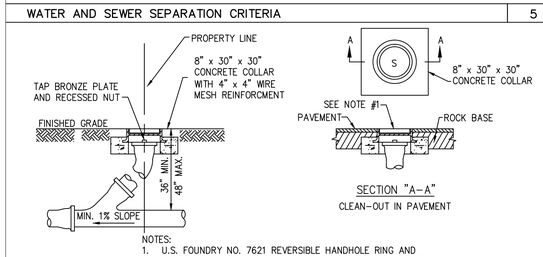

NOTES:

1. U.S. FOUNDRY NO. 7621 REVERSIBLE HANDHOLE RING AND COVER OR APPROVED EQUAL SHALL BE USED, COVER TO BE CAST WITH "S" IN THE CENTER.
2. CLEAN OUT REQUIRED ON ALL SERVICES AT PROPERTY LINE.
3. STANDARD WYE SHALL BE USED AT CLEAN OUT.
4. ALL PIPE AND CLENOUT SHALL BE 6" MIN.

CLEAN OUT | 9

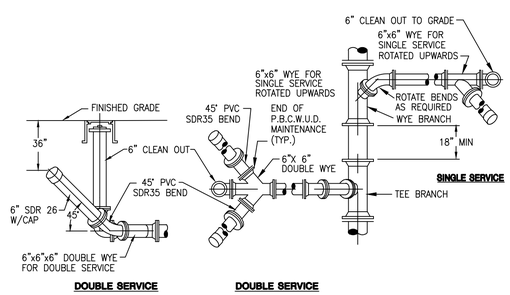

TYPICAL WASTEWATER SERVICE CONNECTION | 10

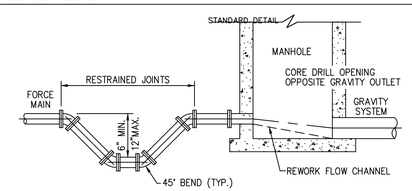

NOTES:

1. INVERT LEVEL OF FORCE MAIN AT POINT OF ENTRY SHALL BE 6" ABOVE INVERT OF MANHOLE.
2. EXISTING STURCTURE TO BE CLEANED, SANDBLASTED, AND RE-PAINTED WITH TWO (2) - 8 MIL COATS (1ST COAT RED, 2ND COAT BLACK) OF AGRU SUREGRIP, KERNEOS SEWERCOAT OR APPROVED EQUAL.

FORCE MAIN ENTERING MANHOLE | 12

Matthew J. Cigale
Florida P.E. No. 74584

CITY PROJECT NO. LS 1609
CTA JOB No. 15-0006-001-04
TASK ORDER NO. 6

REVISIONS					
DATE	BY	DESCRIPTION	DATE	BY	DESCRIPTION

	NAME	DATE		NAME	DATE
DESIGNED BY			DRAWN BY		
CHECKED BY			CHECKED BY		
SUPERVISED BY:					

CRAVEN • THOMPSON AND ASSOCIATES, INC.
ENGINEERS • PLANNERS • SURVEYORS
3563 N.W. 53RD STREET, FORT LAUDERDALE, FLORIDA 33309
FAX: (954) 739-6409 TEL.: (954) 739-6400
FLORIDA LICENSED ENGINEERING, SURVEYING & MAPPING BUSINESS No. 271
FLORIDA LICENSED LANDSCAPE ARCHITECTURE BUSINESS No. C000114

NEW SANITARY GRAVITY SEWER INSTALLATION & WATER MAIN RE-PLACEMENT FROM 10TH TO 12TH AVE. SOUTH IN ALLEY BETWEEN B & C ST.
PREPARED FOR:
CITY OF LAKE WORTH

SANITARY SEWER DETAILS

SHEET NO.
C-8

R:\Engineering\2015\15-0006-001-Lake Worth Continuing Services\004-11th to 12th Water & Sewer- TO#6\Drawings\15-0006-001-04-SSDETAILS.dwg [C-8] Jun 20, 2016 10:39am MCIGALE

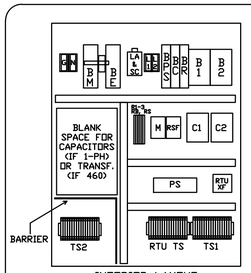

INTERIOR LAYOUT

PANEL COMPONENTS

ALT	ALTERNATOR (ON DISC)
AS	ALARM SILENCE SWITCH
B1-2	MOTOR BREAKERS
BC	CONTROL BREAKER
BE	EMERGENCY BREAKER
BM	MAIN BREAKER
BPS	POWER SUPPLY BREAKER
BR	RECEPTACLE BREAKER
C1-2	CONTACTOR, MOTOR START
CR	CONVENIENCE RECEPTACLE
DISC	DUPLEX INTRINSICALLY SAFE CONTROLLER
ETM	ELAPSED TIME METER
GR	GENERATOR RECEPTACLE
H	HORN
HOA	HAND-OFF-AUTO SWITCH (ON DISC)
LA	LIGHTNING ARRESTOR
M	MONITOR: 1PH.=VOLT, 3PH.=PHASE
PL	PILOT LIGHT (ON DISC)
PS	POWER SUPPLY
SC	SURGE CAPACITOR
TS1	TERMINAL STRIP FOR PUMPS
TS2	TERMINAL STRIP FOR FLOATS
R1-3	RELAYS
RB	BATTERY RELAY
RS	SILENCE RELAY
RSF	SEAL FAIL RELAY
RTUXF	RTU TRANSFORMER
RTU TS	RTU TERMINAL STRIP

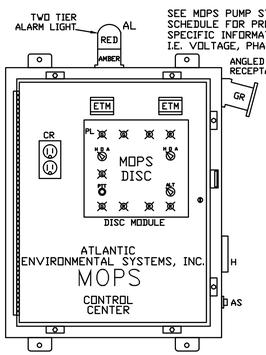

DEAD FRONT LAYOUT
(DOOR NOT SHOWN FOR CLARITY)

NOTES:
A. NEMA 4X STAINLESS STEEL ENCLOSURE ALUMINUM INNER (DEAD FRONT) DOOR 30"H × 24"W × 8"D
B. PANEL LABELED FOR UL. 508A "MOTOR CONTROL CENTERS" AND UL. 698A "HAZARDOUS LOCATION PANELS" (INTRINSICALLY SAFE)
C. COMPLETE BACK-UP, SELF-CHARGING BATTERY, VISUAL/AUDIO ALARM SYSTEM, PER RSWF-45

TS1 TERMINAL SCHEDULE

		COM	SF1	SF2	T1	T2	T3	1	2	PIG	T1	T2	T3	1	2	PIG
RTU TERMINALS (IF USED)			PUMP SEAL FAIL		MOTOR LEADS			MT1 MOTOR 1		GND	MOTOR 2 LEADS			MT2 MOTOR 2		GND

JUMPERS

1	2	3	4	5	6	7	8
FS1 ALT OFF		FS2 CALL LEAD		FS3 CALL LAG		FS4 HIGH ALARM	

TS2 TERMINAL SCHEDULE

MOPS CONTROL CENTER

CONTROL CENTER DESIGNED AND MANUFACTURED TO MEET ALL D.E.P. REQUIREMENTS. SEE SCHEDULE FOR ELECTRICAL SERVICE REQUIREMENTS.

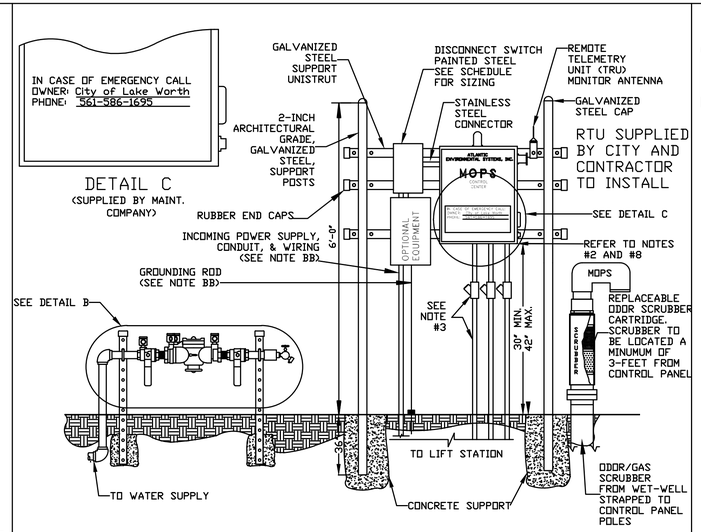

CONTROL CENTER ASSEMBLY AND INSTALLATION N.T.S.

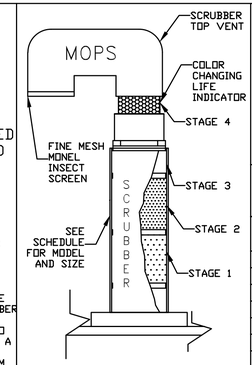

DETAIL A

MOPS ODOR/GAS SCRUBBER

NOTES:
1. SCRUBBER DESIGNED TO REMOVE TOXIC SEWAGE GASES, H2S, AND OFFENSIVE ODORS SUCH AS SKATOLES AND MERCAPTANS.
2. SCRUBBER'S LIFE EXPECTANCY CALCULATIONS ARE INCLUDED IN SHOP DRAWING SUBMITTALS.
3. SCRUBBER UNIT CAN BE MOUNTED INSIDE WET-WELL OR TOP MOUNTED.
4. MODEL 'B' SHOWN.

MOPS

MANUFACTURED ODORLESS PUMP STATION

ATLANTIC ENVIRONMENTAL SYSTEMS, INC.
LAKE WORTH, FL 33461
PH: (561) 547-8080 FAX: (561) 547-3999

© 2000

THIS DRAWING AND THE DESIGN CONTAINED HEREIN IS PROPRIETARY AND IS AND SHALL REMAIN THE PROPERTY OF ATLANTIC ENVIRONMENTAL SYSTEMS, INC. THIS DRAWING AND DESIGN SHOULD BE USED ONLY FOR THE PURPOSE FOR WHICH IT IS INTENDED, AND ONLY WITH WRITTEN AUTHORIZATION FROM ATLANTIC ENVIRONMENTAL SYSTEMS, INC. ANY REPRODUCTION IN WHOLE OR IN PART, WITHOUT PERMISSION FROM ATLANTIC ENVIRONMENTAL SYSTEMS, WOULD VIOLATE ATLANTIC ENVIRONMENTAL SYSTEMS' COPYRIGHTS.

REVISION	DATE
01	02/24/16
02	05/16/16
--	--/--/--
--	--/--/--

MOPS PUMP STATION SCHEDULE

MOPS SERIES		ITEM DESCRIPTION		
INITIAL DESIGN FLOW (G.P.M.)	26		100 YEAR FLOOD ELEVATION	N/A
INITIAL DESIGN HEAD (T.D.H.)	24'		25 YEAR FLOOD ELEVATION	N/A
SECONDARY DESIGN FLOW (G.P.M.)	N/A	A	GRADE ELEVATION	19.70'
SECONDARY DESIGN HEAD (T.D.H.)	N/A	B	TOP ELEVATION OF WET WELL	19.70'
RATED PERFORMANCE SPEED	3450 RPM	C	BOTTOM ELEVATION OF WET WELL	2.70'
RATED MOTOR HORSEPOWER	2.0	D	ALL PUMPS OFF ELEVATION	5.50'
SUBMERSIBLE PUMP TYPE (P=1,P-2)	GRINDER	E	LEAD PUMP ON ELEVATION	6.00'
PUMP MODEL NUMBER	MOPS	F	LAG PUMP ON ELEVATION	6.50'
SERVICE ENTRANCE VOLTAGE	240	G	HIGH ALARM ELEVATION	7.00'
SERVICE ENTRANCE PHASE	1	H	INSIDE DIAMETER OF WET-WELL	48"
CONTROL CENTER FULL LOAD AMPS	32	I	OUTSIDE DIAMETER OF ANTI-FLOATATION RING	84"
NEMA 3R PAINTED STEEL DISCONNECT SWITCH, RATED AMPS	60	J	MINIMUM CUBIC FEET OF CONCRETE BALLAST (CU YDS)	000/(0)
WET WELL SCOURER SYSTEM	N/A	K	INVERT PIPE DIAMETER	8"
REMOTE STATION MONITOR (TELEMETRY)	N/A	L	FORCE MAIN DIAMETER	1.25"/2"
ON-SITE GENERATOR SYSTEM	N/A	M	PRIMARY INVERT ELEVATION	7.64'
		N	SECONDARY INVERT ELEVATION	N/A

MOPS EQUIPMENT IDENTIFICATION	QTY.	MODEL DESIGNATION
MOPS PUMP STATION	1	B21.25-48204-B-2.0
MOPS VALVE BOX ASSEMBLY (VBA)	1	VBA-21.25
MOPS ODOR/GAS SCRUBBER (OGS)	1	OGS-B
MOPS R.P.Z. ASSEMBLY	1	75
MOPS CONTROL CENTER	1	PSC-221-2.0
MOPS DISCONNECT SWITCH	1	FDS-60-1-2-PS
MOPS CONTROL CENTER MOUNTING ASSEMBLY	1	CCMA-22GA
MOPS WET WELL SCOURER SYSTEM	0	N/A
MOPS REMOTE STATION MONITOR	0	N/A
1st YEAR SERVICE/MAINTENANCE CONTRACT	0	OPTIONAL
MOPS ON-SITE GENERATOR SYSTEM	0	N/A
MOPS FIELD SERVICE WORK	1	CONTROL INSTALLATION & START-UP

MOPS PUMP STATION COMPLIANCE NOTES

THIS PUMP STATION DESIGN COMPLIES WITH THE FOLLOWING REQUIRED STANDARDS:

- STATE OF FLORIDA ENVIRONMENTAL PROTECTION STANDARDS
- FLORIDA ADMINISTRATIVE CODE (F.A.C.): 62-640.400- COLLECTION AND TRANSMISSION SYSTEMS
- NATIONAL ELECTRIC CODE (NEC) CLASS 1, DIVISION 1, GROUP D- HAZARDOUS LOCATIONS
- UNDERWRITER'S LABORATORIES (U.L.) 508A-MOTOR CONTROL CENTERS AND U.L. 698A-INSTRINSICALLY SAFE CONTROL CENTERS
- RECOMMENDED STANDARDS FOR WASTEWATER FACILITIES (1997 EDITION).

1. PUMPS ARE RATED BY FACTORY MUTUAL FOR CLASS 1, DIVISION 1, GROUP D ATMOSPHERES AS REQUIRED BY NEC.
2. THE CONTROL CENTER INCORPORATES INTRINSICALLY SAFE RELAYS AND IS LISTED TO UL 698A INTRINSICALLY SAFE FOR CLASS 1, DIVISION 1 ATMOSPHERES.
3. THE CONDUIT PROVIDED, ALONG WITH CONDUIT GAS-SEAL-OFFS, ARE RATED FOR CLASS 1, DIVISION 1 LOCATIONS.
4. THE WASTEWATER PUMPS AND THE CONTROL CENTER INCORPORATE A MECHANICAL SEAL FAILURE DETECTION AND NOTIFICATION SYSTEM.
5. THE CONTROL CENTER INCLUDES EITHER A REMOTE TELEMETRY UNIT (RTU) OR A SELF-CHARGING, BACK-UP ALARM SYSTEM TO OPERATE ON POWER FAILURE.
6. THE PUMP STATION INCORPORATES AN ODORLESS DESIGN WITH A SCRUBBER SYSTEM TO CONTROL TOXIC GASES AND ODORS FOR COMPLIANCE TO F.A.C. 62-604.400.
7. THE BOTTOM OF THE TOP RIM ELEVATION OF PUMP STATION MUST BE LOCATED AT A HIGHER ELEVATION THAN THE 25 YEAR FLOOD ELEVATION. THE LISTED 25 YEAR FLOOD ELEVATION PROVIDED BY SITE CIVIL ENGINEER.
8. THE BOTTOM ELEVATION OF THE MOPS CONTROL CENTER MUST BE LOCATED AT A HIGHER ELEVATION THAN THE 100 YEAR FLOOD ELEVATION. THE LISTED 100 YEAR FLOOD ELEVATION PROVIDED BY THE SITE CIVIL ENGINEER.

MOPS ENGINEERING NOTES

AA. THE HORSEPOWER SHOWN ON THE SCHEDULE IS A MINIMUM HORSEPOWER REQUIREMENT BASED ON THE STATION'S DESIGN CRITERIA AND THE REQUIRE TORQUE. (LOWER RATED HORSEPOWER EQUIPMENT WILL NOT BE ACCEPTABLE.)
BB. THESE ITEMS ARE NOT SUPPLIED BY A.E.S. WITH THE MOPS STATION.
CC. INVERT ELEVATIONS BASED ON INSIDE BOTTOM OF PIPE.
DD. THE MOPS CONTROL ASSEMBLY CONSISTS OF THE FOLLOWING: CONTROL CENTER DISCONNECT SWITCH, MOUNTING ASSEMBLY, ELECTRICAL CONDUITS, AND SEAL-OFF. THESE ITEMS MUST BE SUPPLIED AND INSTALLED BY THE MOPS PUMP STATION MANUFACTURER TO VALIDATE MOPS WARRANTY PROGRAM.

THE MOPS WASTEWATER PUMP STATION DESIGN AND EQUIPMENT SHOWN ON THIS DRAWING HAS BEEN REVIEWED, PERMITTED, AND CERTIFIED AS COMPLYING WITH ALL THE STATE OF FLORIDA D.E.P. AND LOCAL REQUIREMENTS. ANY SUBSTITUTION FROM THIS DESIGN MAY REQUIRE NEW PERMITS, APPLICATION FEES, AND ENGINEERING SERVICES FOR RE-CERTIFICATION AND DESIGN REVIEW.

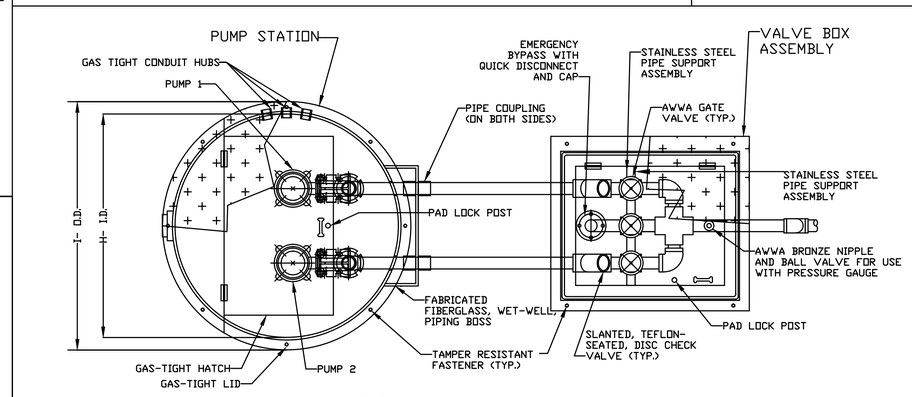

TOP VIEW N.T.S.

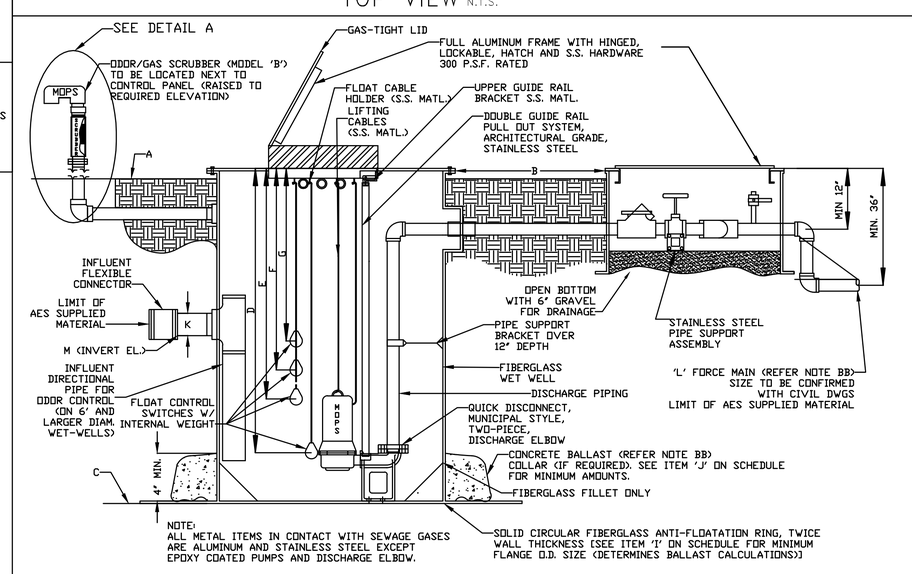

SECTION VIEW N.T.S.

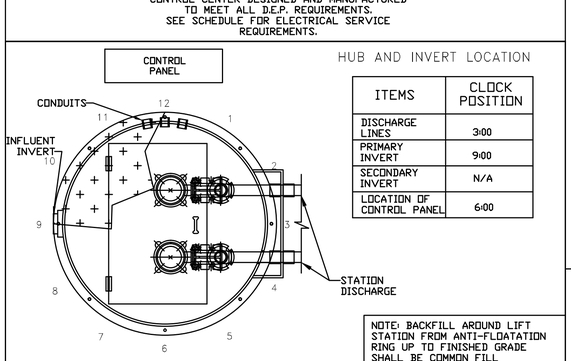

HUB AND INVERT LOCATION

ITEMS	CLOCK POSITION
DISCHARGE LINES	3:00
PRIMARY INVERT	9:00
SECONDARY INVERT	N/A
LOCATION OF CONTROL PANEL	6:00

SCHEMATIC BASED ON THE STATION'S DISCHARGE BEING LOCATED AT THE #3 CLOCK POSITION. SEE SCHEDULE FOR LOCATION OF INVERTS AND CONTROL PANEL. LOCATIONS SUBJECT TO CHANGE.

NOTE: BACKFILL AROUND LIFT STATION FROM ANTI-FLOATATION RING UP TO FINISHED GRADE SHALL BE COMMON FILL COMPACTED IN 12-INCH MAX. LIFTS TO 98% DENSITY PER AASHTO T-180. CONTRACTOR SHALL EXERCISE CARE NOT TO DAMAGE WETWELL DURING COMPACTION.

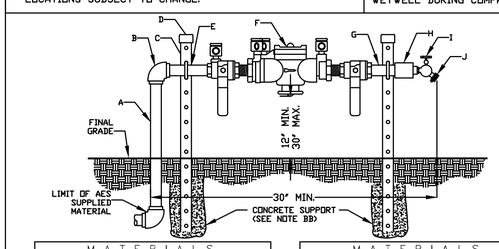

MATERIALS		
ITEM	QTY	DESCRIPTION
A	1	3/4" x 24" STAINLESS STEEL NIPPLE
B	2	3/4" x 1" STAINLESS STEEL 90o ELBOW
C	2	1" x 1" x 40" SS SUPPORT BRACKET
D	2	SUPPORT BRACKET CAPS P/N 940
E	2	3/4" STAINLESS STEEL PIPE BOLTS

MATERIALS		
ITEM	QTY	DESCRIPTION
F	1	3/4" APPROVED BACKFLOW PREVENTER
G	1	3/4" x 4" STAINLESS STEEL NIPPLE
H	1	3/4" x 3/4" STAINLESS STEEL COUPLING
I	1	3/4" BRONZE HOSE BIBB
J	1	3/4" VACUUM BREAKER

DETAIL B

R.P.Z. BACKFLOW PREVENTER ASSEMBLY DETAIL

U.S.C. AND A.S.S.E. APPROVED N.T.S.

P.E. CERTIFICATION:

Bonnie S. McLeod, P.E. License # 70797
V.P. of Engineering
Atlantic Environmental Systems, Inc., C A # 26398
2244 4th Ave. North, Lake Worth, Florida 33461
Ph: 561-547-8080 / Fax: 561-547-3999

CITY OF LAKE WORTH
LS #32

Project: CITY OF LAKE WORTH- 11TH AVE S.-12TH AVE S.

Prepared For: CRAVEN THOMPSON & ASSOCIATES
3563 NW 53RD ST., FT. LAUDERDALE, FL 33309

AES Project No: 940

Date: 09/21/15

Page No. C-9

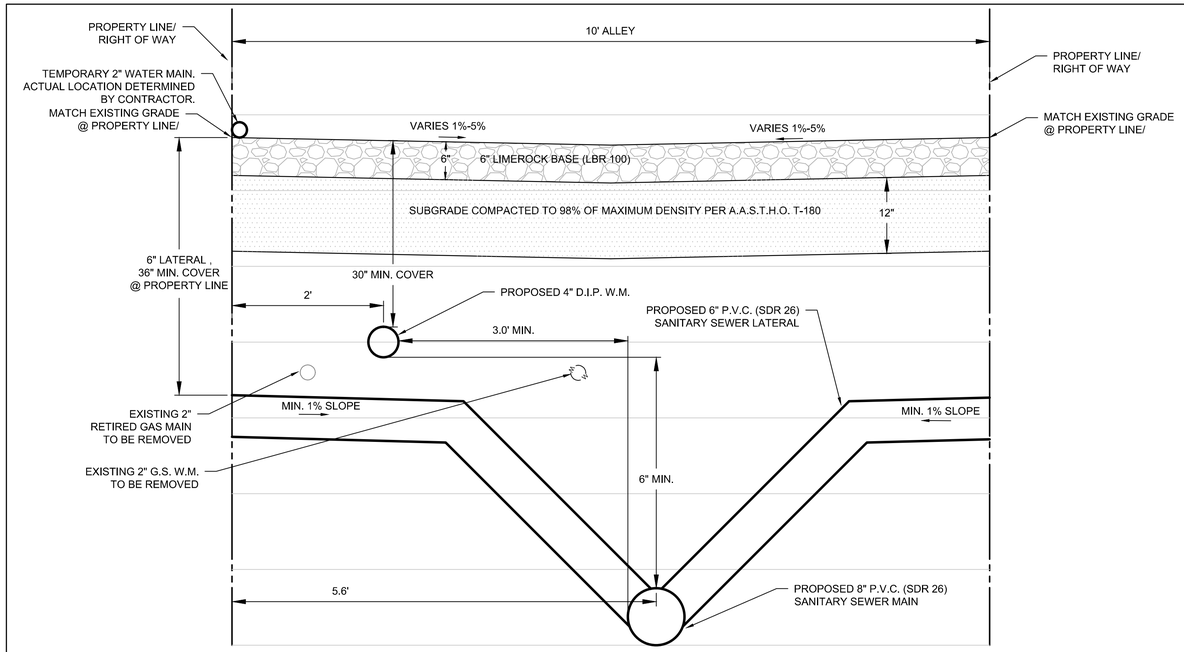

TYPICAL ALLEY SECTION SOUTH OF 11TH AVE SOUTH

SCALE: N.T.S.

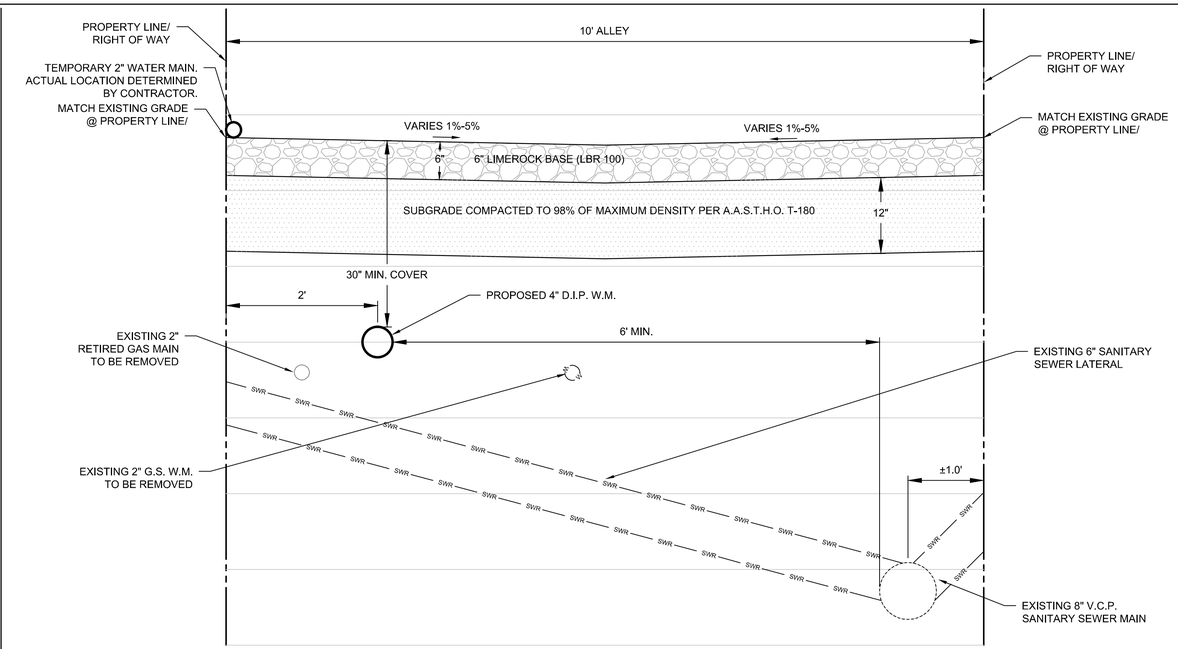

TYPICAL ALLEY SECTION NORTH OF 11TH AVE SOUTH

SCALE: N.T.S.

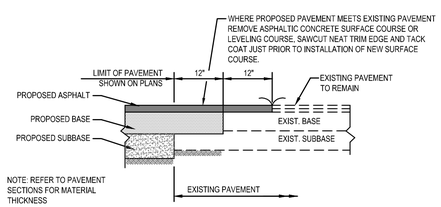

PAVEMENT RESTORATION DETAIL

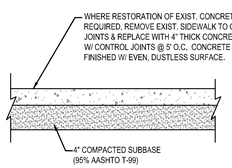

CONCRETE SIDEWALK RESTORATION DETAIL
N.T.S.

CITY OF LAKE WORTH PUBLIC SERVICES DEPARTMENT	PAVEMENT AND SIDEWALK RESTORATION	DETAIL NO. 19

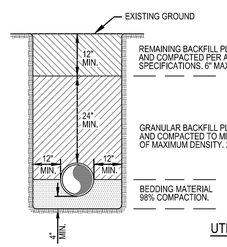

NOTES:
1. BEDDING SHALL CONSIST OF IN-SITU GRANULAR MATERIAL OR WASHED AND GRADED LIMEROCK 3/8" - 7/8" SIZING. UNSUITABLE IN-SITU MATERIALS SUCH AS MUCK, DEBRIS AND LARGER ROCK SHALL BE REMOVED.
2. THE PIPE SHALL BE FULLY SUPPORTED FOR ITS ENTIRE LENGTH WITH APPROPRIATE COMPACTION UNDER THE PIPE HAUNCHES.
3. THE PIPE SHALL BE PLACED IN A DRY TRENCH.
4. BACKFILL SHALL BE FREE OF UNSUITABLE MATERIALS SUCH AS LARGER ROCK, MUCK AND DEBRIS.

UTILITY TRENCH DETAIL
N.T.S.

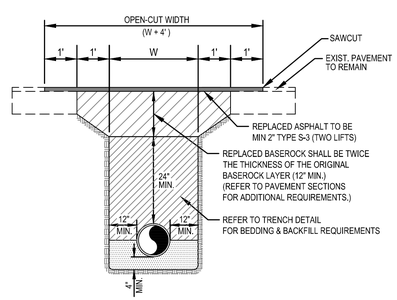

NOTES:
1. PAVEMENT OVERLAY MAY BE REQUIRED IN OPEN-CUT AREAS AT THE DISCRETION OF THE CITY ENGINEER.
2. THE CONTRACTOR SHALL COMPLY WITH APPLICABLE TRENCH SAFETY REGULATIONS.
3. FINISHED SURFACE SHALL HAVE SMOOTH FINISH & SHALL MATCH FLUSH TO SURROUNDING PAVEMENT.

PAVEMENT OPEN-CUT DETAIL
N.T.S.

CITY OF LAKE WORTH PUBLIC SERVICES DEPARTMENT	UTILITY TRENCH AND PAVEMENT OPEN-CUT	DETAIL NO. 21

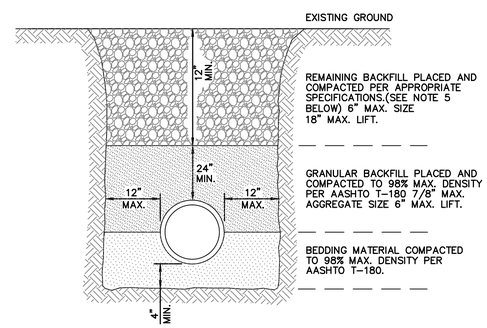

NOTES:
1. UNSUITABLE IN-SITU MATERIALS SUCH AS MUCK, DEBRIS AND LARGE ROCKS SHALL BE REMOVED; BEDDING MATERIAL AND BACKFILL CONSISTING OF WASHED AND GRADED LIMEROCK 3/8" -7/8" SIZING.
2. THE PIPE AND/OR STRUCTURE SHALL BE FULLY SUPPORTED FOR ITS ENTIRE LENGTH WITH APPROPRIATE COMPACTION UNDER THE PIPE HAUNCHES.
3. THE PIPE AND/OR STRUCTURE SHALL BE PLACED IN A DRY TRENCH.
4. BACKFILL SHALL BE FREE OF UNSUITABLE MATERIAL SUCH AS LARGE ROCK, MUCK, AND DEBRIS.
5. COMPACT BACKFILL TO 98% DENSITY UNDER PAVEMENT AND TO 95% DENSITY ELSEWHERE.(AASHTO T-180)
6. COMPACTION AND DENSITY TESTS SHALL BE COMPLETED DURING BACKFILL OPERATIONS, CONTRACTORS NOT FOLLOWING THIS PROCEDURE, FOR WHATEVER REASONS, SHALL BE REQUIRED TO RE-EXCAVATE THE AREA IN QUESTION, DOWN TO THE BEDDING MATERIAL, THEN BACKFILL FOLLOWING THE ABOVE PROCEDURES.

CITY OF LAKE WORTH PUBLIC SERVICES DEPARTMENT	TYPICAL BACKFILL DETAIL	DETAIL NO. 22

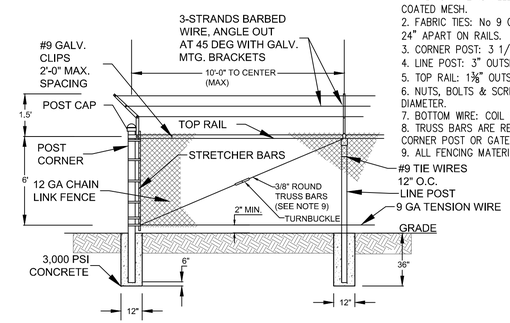

LIFT STATION CHAIN-LINK FENCE DETAIL
NTS

NOTES:
1. FABRIC: PREINSTALLED PRIVACY SLATS 3 1/2" X 5" CHAIN LINK PVC COATED MESH.
2. FABRIC TIES: No 9 GALV STEEL WIRE SPACED 12" APART ON POST AND 24" APART ON RAILS.
3. CORNER POST: 3 1/2" OUTSIDE DIAMETER PIPE
4. LINE POST: 3" OUTSIDE DIAMETER PIPE
5. TOP RAIL: 1⅝" OUTSIDE DIAMETER PIPE
6. NUTS, BOLTS & SCREWS: SHALL BE OF GALVANIZED STEEL, MIN SIZE ⅜" DIAMETER.
7. BOTTOM WIRE: COIL SPRING WIRE 7 GA.
8. TRUSS BARS ARE REQUIRED FOR THE FIRST SPAN ON EACH SIDE OF A CORNER POST OR GATE SECTION.
9. ALL FENCING MATERIALS: TO BE HOT DIPPED GALVANIZED.

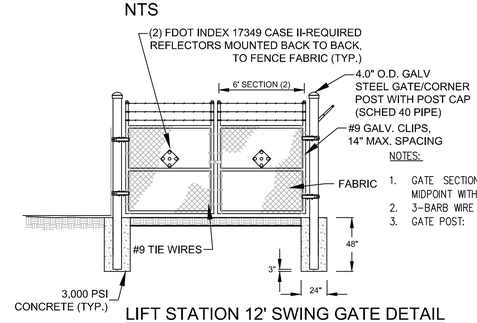

NOTES:
1. GATE SECTIONS SHALL BE HORIZONTALLY CROSS-BRACED AT THE MIDPOINT WITH 1.660" DIA. SCHEDULE 40 STEEL PIPE.
2. 3-BARB WIRE STRANDS W/GALV. BRACKETS, SET VERTICAL OVER GATE.
3. GATE POST: 4" OUTSIDE DIAMETER PIPE, 9.1 #/FT.

LIFT STATION 12' SWING GATE DETAIL
NTS

Matthew J. Cigale
Florida P.E. No. 74584

CITY PROJECT NO. LS 1609
CTA JOB No. 15-0006-001-04
TASK ORDER NO. 6

REVISIONS					
DATE	BY	DESCRIPTION	DATE	BY	DESCRIPTION

	NAME	DATE		NAME	DATE
DESIGNED BY			DRAWN BY		
CHECKED BY			CHECKED BY		
SUPERVISED BY:					

CRAVEN • THOMPSON AND ASSOCIATES, INC.
ENGINEERS • PLANNERS • SURVEYORS
3563 N.W. 53RD STREET, FORT LAUDERDALE, FLORIDA 33309
FAX: (954) 739-6409 TEL.: (954) 739-6400
FLORIDA LICENSED ENGINEERING, SURVEYING & MAPPING BUSINESS No. 271
FLORIDA LICENSED LANDSCAPE ARCHITECTURE BUSINESS No. C000114

NEW SANITARY GRAVITY SEWER INSTALLATION & WATER MAIN RE-PLACEMENT FROM 10TH TO 12TH AVE. SOUTH IN ALLEY BETWEEN B & C ST.
PREPARED FOR:
CITY OF LAKE WORTH

PAVING & GRADING DETAILS & SECTIONS

SHEET NO.
C-10

R:\Engineering\2015\15-0006-001-Lake Worth Continuing Services\004-11th to 12th Water & Sewer- TO#6\Drawings\15-0006-001-04-PGDDET.dwg [C-10] Jun 14, 2016 5:35pm MCIGALE

NOTE: The undersigned and CRAVEN THOMPSON & ASSOCIATES, INC. make no representations or guarantees as to the information reflected hereon pertaining to easements, right-of-way, set back lines, reservations, agreements and other similar matters, and this instrument is not intended to reflect or set forth all such matters. Such information should be obtained and further, confirmed by others through appropriate title verification.
NOTE: Lands shown hereon were not abstracted for right-of-way and/or easements of record.

SKETCH OF SURVEY
TOPOGRAPHIC SURVEY

0 30' 60'
GRAPHIC SCALE IN FEET

GPS FIELD PROCEDURES:

THE HORIZONTAL CONTROL SURVEY DATA SHOWN HEREON IS BASED ON STATE PLANE COORDINATE SYSTEM (FLORIDA EAST ZONE), NORTH AMERICAN DATUM OF 1983/1990 (NAD 83/90), AND WAS OBTAINED BY UTILIZING A TRIMBLE R8 GNSS ROVER, AS OPERATED BY CRAVEN THOMPSON AND ASSOCIATES (CTA) AND THE "TRIMBLE VRS" REAL TIME KINEMATICS STATE-WIDE GPS NETWORK OPERATED BY TRIMBLE. THE GPS DATA HAS BEEN PROCESSED WITH A LEAST SQUARE ADJUSTMENT BASED ON A HORIZONTAL BEST FIT MODEL USING THIRTY MINUTE REDUNDANT OBSERVATIONS WITH TRIMBLE BUSINESS CENTER SOFTWARE ON NATIONAL GEODETIC SURVEY CONTROL MONUMENTS:

1. RUSK (PID AD8537)
2. 06-78E-07 (PID AD7887) AND A CONTINOUSLY OPERATING BASE STATION OPERATED BY TRIMBLE NAVIGATION:
3. TRIMBLE VRS BASE STATION (PRS 185987612310)

TRIMBLE BASE STATION PRS 185987612310 WAS UTILIZED IN THE PROCESSING OF THE GPS DATA AND LIES WITHIN 7 MILES OF THE SITE. ALL GPS OBSERVATIONS HAD AT LEAST 12 SATELLITES BEING OBSERVED WITH A MAXIMUM HORIZONTAL PRECISION ERROR OF 0.058 +/- FEET. THIS MEETS OR EXCEEDS THE MINIMUM RELATIVE DISTANCE ACCURACY OF 1 FOOT IN 10,000 FEET AS REQUIRED FOR COMMERCIAL/HIGH RISK CLASSIFICATION, AS REQUIRED BY THE FLORIDA STANDARDS OF PRACTICE (5J-170.052 F.A.C.)

SURVEYOR'S NOTES:

1) THE BEARINGS SHOWN HEREON ON ARE BASED ON THE STATE PLANE COORDINATE SYSTEM, FLORIDA EAST ZONE, NAD 83 (2011) EXPRESSED IN U.S. SURVEY FEET.
2) THE LEGAL DESCRIPTION SHOWN HEREON WAS PREPARED BY THIS OFFICE.
3) THE RIGHT-OF WAY LINES AND OWNERSHIP LINES (LOT LINES) SHOWN HEREON ARE BASED INFORMATION OBTAINED FROM THE CITY OF LAKE WORTH PROPERTY APPRAISERS OFFICE,
4) BOUNDARY CORNERS SHOWN HEREON WERE NOT SET. SAID CORNERS FOR THIS TOPOGRAPHIC SURVEY WERE LOCATED BY REDUNDANT MEASUREMENTS FROM HORIZONTAL CONTROL POINTS REFERENCED TO THE GPS CONTROL POINTS LISTED ABOVE.
5) ALL EASEMENTS SHOWN HEREON ARE PER THE RECORD PLAT UNLESS OTHERWISE NOTED.
6) THIS SURVEY WAS PREPARED WITHOUT THE BENEFIT OF A TITLE SEARCH, THEREFORE ONLY THOSE EASEMENTS ON THE RECORD PLAT ARE SHOWN UNLESS OTHERWISE NOTED. INFORMATION REGARDING EASEMENTS, RIGHTS-OF-WAY, AND/OR OWNERSHIP WAS NOT PROVIDED TO OR PURSUED BY THE UNDERSIGNED. ENCUMBRANCES OTHER THAN SHOWN HEREON MAY EXIST. THIS SURVEY IS SUBJECT TO PERTINENT EASEMENTS, RIGHTS-OF-WAY AND RESTRICTIONS OF RECORD, IF ANY.
7) THE PURPOSE OF THIS TOPOGRAPHIC SURVEY IS TO SHOW THE RELATIONSHIP BETWEEN THE EXISTING IMPROVEMENTS SHOWN HEREON AND THE DEDICATED RIGHTS-OF-WAY FOR ENGINEERING DESIGN PURPOSES.
8) THIS SURVEY MEETS AND EXCEEDS THE LINEAR CLOSURE OF 1 IN 10,000 FEET FOR COMMERCIAL/HIGH RISK SURVEYS AS DEFINED IN THE FLORIDA STANDARDS OF PRACTICE (5J-17.051, 5J-17.052 AND 5J-17.053, F.A.C.). THE ACCURACY OBTAINED BY MEASUREMENT AND CALCULATION OF A CLOSED GEOMETRIC FIGURE WAS FOUND TO EXCEED THIS REQUIREMENT.
9) THIS SURVEY IS LIMITED TO THE LOCATION OF ABOVE GROUND IMPROVEMENTS ONLY. UNDERGROUND UTILITIES, FOUNDATIONS OR OTHER BURIED ENCROACHMENTS WERE NOT LOCATED IN CONNECTION WITH THIS SURVEY UNLESS OTHERWISE NOTED.
10) THE TOPOGRAPHICAL MEASUREMENTS SHOWN HEREON WERE OBTAINED USING A "LEICA TC-700 SERIES" TOTAL STATION AND "TDS" DATA COLLECTION SOFTWARE. THE ACCURACY OF CONTROL SURVEY DATA HAS BEEN VERIFIED BY REDUNDANT MEASUREMENTS OR TRAVERSE CLOSURES.
11) THIS SURVEY DRAWING WAS PREPARED FOR THE EXCLUSIVE USE OF CITY OF LAKE WORTH FOR THE EXPRESS PURPOSES STATED HEREON AND/OR CONTAINED IN THE CONTRACT WITH THE AFOREMENTIONED CLIENT FOR THIS PROJECT. REUSE OF THIS SURVEY FOR PURPOSES OTHER THAN WHICH IT WAS INTENDED, WITHOUT WRITTEN PERMISSION, WILL BE AT THE RE-USERS SOLE RISK AND WITHOUT LIABILITY TO THE SURVEYOR. NOTHING SHOWN HEREON SHALL BE CONSTRUED TO GIVE RIGHTS OR BENEFITS TO ANYONE OTHER THAN THOSE CERTIFIED TO.
12) THIS MAP IS INTENDED TO BE DISPLAYED AT A SCALE OF 1"=30' OR SMALLER. THE HORIZONTAL FEATURES SHOWN HEREON ARE PLOTTED TO WITHIN 1/20 OF THE MAP SCALE. HORIZONTAL FEATURE LOCATIONS ARE TO THE CENTER OF THE SYMBOL AND MAY BE ENLARGED FOR CLARITY AND MAY NOT REPRESENT THE ACTUAL SIZE OR SHAPE OF THE FEATURE.
13) ADDITIONS AND DELETIONS TO SURVEY MAPS AND REPORTS BY OTHER THAN THE SIGNING PARTY OR PARTIES IS PROHIBITED WITHOUT WRITTEN CONSENT OF THE UNDERSIGNED. THIS DOCUMENT CONSISTS OF 2 SHEETS AND EACH SHEET SHALL NOT BE CONSIDERED FULL, VALID AND COMPLETE UNLESS ATTACHED TO THE OTHERS.
14) TREE TYPES ARE DETERMINED TO THE BEST OF OUR KNOWLEDGE. EXACT SPECIES SHOULD BE DETERMINED BY A LICENSED BOTANIST, DENDROLOGIST OR OTHER PROFESSIONAL WITH SUCH CAPACITY.
15) THE ELEVATIONS SHOWN HEREON ARE FOR THE PURPOSE OF INDICATING THE GROUND ELEVATION ONLY AT THE POSITION SHOWN AND IN NO WAY INDICATE ELEVATIONS AT ANY OTHER POINT THAN THAT SHOWN HEREON AND DO NOT DETERMINE SUBSURFACE CONDITIONS.
16) THE ELEVATIONS SHOWN HEREON ARE BASED ON THE NORTH AMERICAN VERTICAL DATUM OF 1988 (NAVD 88) AND REFERENCED TO THE FOLLOWING BENCHMARK, PALM BEACH COUNTY BRASS DISK STAMPED "EC 6TH", ELEVATION = 17.309. A PALM BEACH COUNTY BRASS DISK SET IN CONCRETE. LOCATED 29.4' WEST OF THE WEST RAIL OF THE RAILROAD TRACKS, 52' SOUTH OF THE CENTERLINE OF 6TH AVENUE SOUTH, 4' SOUTH OF A CONCRETE SIDEWALK, 3' NORTH OF A WOODEN POWER POLE WITH A WITNESS SIGN NAILED TO IT AND .5' BELOW THE LEVEL OF THE RAILROAD TRACKS.
17) ALL DOCUMENTS ARE RECORDED IN THE PUBLIC RECORDS OF PALM BEACH COUNTY FLORIDA UNLESS OTHERWISE NOTED.

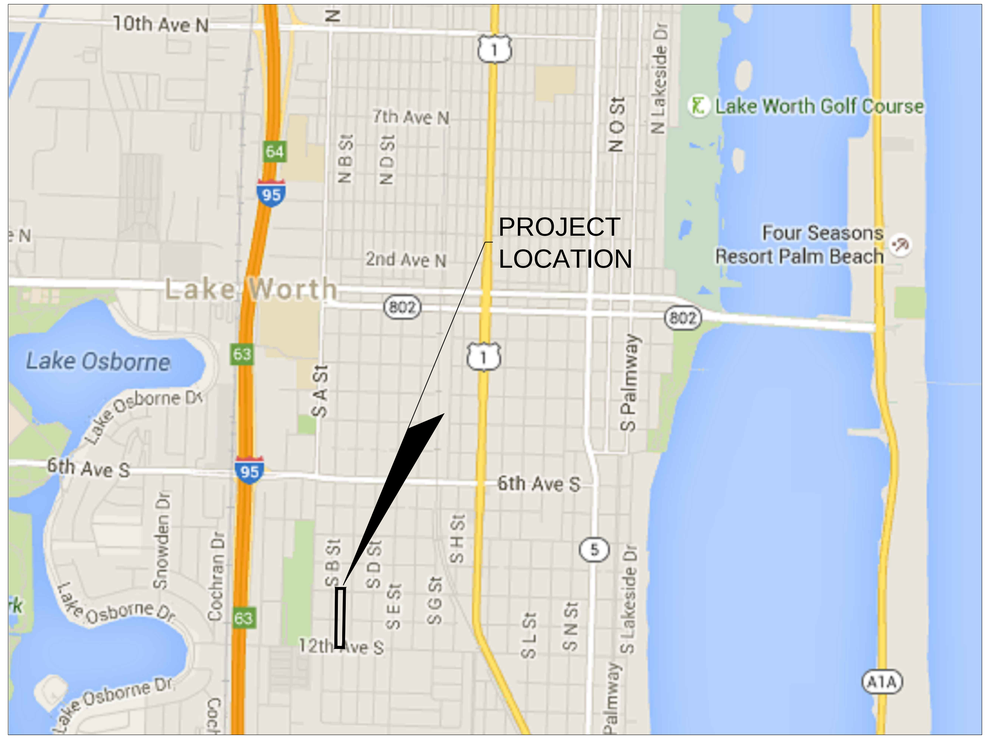

LOCATION MAP
SECTION 28, TOWNSHIP 44, RANGE 43
(NOT TO SCALE)

SYMBOL LEGEND

A/C	AIR CONDITIONING UNIT		PIPE
	AIR RELEASE VALVE	CO	SANITARY CLEAN OUT
	ANCHOR	S	SANITARY MANHOLE
	BACK FLOW PREVENTER		SIAMESE VALVE
	BIKE RACK		SIGN
	BOLLARD		SPOT-FLOOD LIGHT
	CATV PEDESTAL	D	STORM MANHOLE
CB	CATCH BASIN	T	TELEPHONE MANHOLE
	CONCRETE POST		TELEPHONE PEDESTAL
	CONCRETE POWER POLE	TH	TEST HOLES
DDCV	DOUBLE DETECTOR CHECK VALVE		TRAFFIC POLE
	DECORATIVE/YARD LIGHT POLE		TRAFFIC PULL BOX
	ELECTRICAL OUTLET		TRASH CAN
	ELECTRICAL PULL BOX		BLOW-OFF VALVE
	ELECTRICAL METER		WATER METER
	FIRE HYDRANT	W	WATER VALVE
	GAS MARKER		WOOD POST
	GAS METER		WOOD LIGHT POLE
GAS	GAS VALVE		WOOD TELEPHONE POLE
G	GREASE TRAP MH	YD	YARD DRAIN
IRR	IRRIGATION CONTROL VALVE		PALM TREE
LP	LP GAS TANK		SHADE TREE
	MAIL DROP BOX		GUARDRAIL
	METAL LIGHT POLE	OHW	OVER HEAD WIRES
	MONITORING WELL	+16.16	HARD SURFACE ELEVATION
	PARK BENCH	+16.1	GROUND SPOT ELEVATION
	PEDESTRIAN SIGNAL		

CONTROL LEGEND

D•H	DRILL HOLE
P	IRON PIPE
R	IRON ROD
N	NAIL&TAB
△	PKNAIL.SPIKE

ABBRIVIATION LEGEND

C.B.	CATCH BASIN
C.I.	CURB INLET
C&G	CURB & GUTTER
C.L.F.	CHAIN LINK FENCE
CONC.	CONCRETE
ELEC.	ELECTRIC
ELEV.	ELEVATION
F.E.C.R.	FLORIDA EAST COAST RAILWAY
F.F.	FINISHED FLOOR
FND.	FOUND
GR. MH	GREASE MANHOLE
LB	LICENSED BUSINESS
LS	LAND SURVEYOR
(NO ID)	NO IDENTIFICATION
P.B.C.R.	PALM BEACH COUNTY RECORDS
SAN. MH	SANITARY MANHOLE
STM. MH	STORM MANHOLE
TR. DN.	TRENCH DRAIN
(TYP.)	TYPICAL
V.F.	VINYL FENCE
W.F.	WOOD FENCE
W.I.F.	WROUGHT IRON FENCE
W.P.F.	WOOD PICKET FENCE

DESCRIPTION:

ALL OF THAT PORTION OF THE 10 FOOT WIDE PLATTED ALLEY'S LYING WITHIN BLOCKS 273 AND 299, TOGETHER WITH THE RIGHTS-OF-WAY FOR 10th AVENUE SOUTH (2nd AVENUE PER PLAT), 11th AVENUE SOUTH (1st AVENUE PER PLAT) AND 12th AVENUE SOUTH (OSBORNE BOULEVARD) LYING ADJACENT TO SAID ALLEY'S, ALL LYING WITHIN THE PALM BEACH FARMS CO PLAT NO. 2. THE TOWNSITE OF LUCERNE, AS RECORDED IN PLAT BOOK 2, PAGES 29 THRU 40 OF THE PUBLIC RECORDS OF PALM BEACH COUNTY, FLORIDA.

SAID LANDS SITUATE, LYING AND BEING IN THE CITY OF LAKE WORTH, PALM BEACH COUNTY, FLORIDA.

SURVEYOR'S CERTIFICATE:

I HEREBY CERTIFY THAT THIS TOPOGRAPHIC SURVEY AND OTHER PERTINENT DATA SHOWN HEREON, OF THE ABOVE DESCRIBED PROPERTY WAS MADE ON THE GROUND, CONFORMS TO THE STANDARDS OF PRACTICE FOR LAND SURVEYING IN THE STATE OF FLORIDA, AS OUTLINED IN RULES 5J-17.051, 5J-17.052 AND 5J-17.053, (FLORIDA ADMINISTRATIVE CODE) AS ADOPTED BY THE DEPARTMENT OF AGRICULTURE AND CONSUMER SERVICES, BOARD OF PROFESSIONAL SURVEYORS AND MAPPERS IN SEPTEMBER, 1981, AS AMENDED, PURSUANT TO CHAPTER 472.027, FLORIDA STATUTES AND THAT SAID SURVEY IS TRUE AND CORRECT TO THE BEST OF MY KNOWLEDGE AND BELIEF AS SURVEYED UNDER MY DIRECTION IN OCTOBER, 2015.

LAST DATE OF FIELD WORK: OCTOBER 8, 2015

CRAVEN THOMPSON & ASSOCIATES, INC.
CERTIFICATE OF AUTHORIZATION NO. LB271

THOMAS C. SHAHAN
PROFESSIONAL SURVEYOR & MAPPER NO. 4387
STATE OF FLORIDA

THIS SURVEY MAP AND REPORT OR COPIES THEREOF ARE NOT VALID WITHOUT THE SIGNATURE AND ORIGINAL RAISED SEAL OR A UNIQUE ELECTRONIC SIGNATURE OF A FLORIDA LICENSED PROFESSIONAL SURVEYOR AND MAPPER UNDER CHAPTER RULES 5J-17.061 & 5J-17.062 FLORIDA ADMINISTRATIVE CODE.

DESCRIPTION:	BY:	DATE:	DESCRIPTION:	BY:	DATE:

DATE:	10/08/2015	CHECKED BY:	T.S.
SCALE:	1"=30'	FIELDBOOK:	2703
DRAWN BY:	JDR	PAGE(S):	24-43

CRAVEN • THOMPSON AND ASSOCIATES, INC.
ENGINEERS • PLANNERS • SURVEYORS
3563 N.W. 53RD STREET, FORT LAUDERDALE, FLORIDA 33309
FAX: (954) 739-6409 TEL.: (954) 739-6400
FLORIDA LICENSED ENGINEERING, SURVEYING & MAPPING BUSINESS No. 271
FLORIDA LICENSED LANDSCAPE ARCHITECTURE BUSINESS No. C000114

COPYRIGHT 2015.

NEW SANITARY SEWER INSTALLATION & WATER MAIN
WATER MAIN RE-PLACEMENT-10th AVENUE S. TO
12th AVENUE S.-ALLEY BETWEEN S. B & S. C STREETS

COVER SHEET
PREPARED FOR:
CITY OF LAKE WORTH

PROJECT NO. 15-0006-001-04

SHEET NAME V-1

SHEET 1 OF 2

G:\2015\15-0006-6th_AVE_SOUTH\Drawings\Base Map-Task Order 6.dwg [V-1] May 17, 2016 7:45am TSHAHAN

NOTE: The undersigned and CRAVEN THOMPSON & ASSOCIATES, INC. make no representations or guarantees as to the information reflected hereon pertaining to easements, right-of-way, set back lines, reservations, agreements and other similar matters, and this instrument is not intended to reflect or set forth all such matters. Such information should be obtained and further, confirmed by others through appropriate title verification.
NOTE: Lands shown hereon were not abstracted for right-of-way and/or easements of record.

SKETCH OF SURVEY
TOPOGRAPHIC SURVEY

GRAPHIC SCALE IN FEET 0 30' 60'

MATCH LINE-SEE BELOW RIGHT

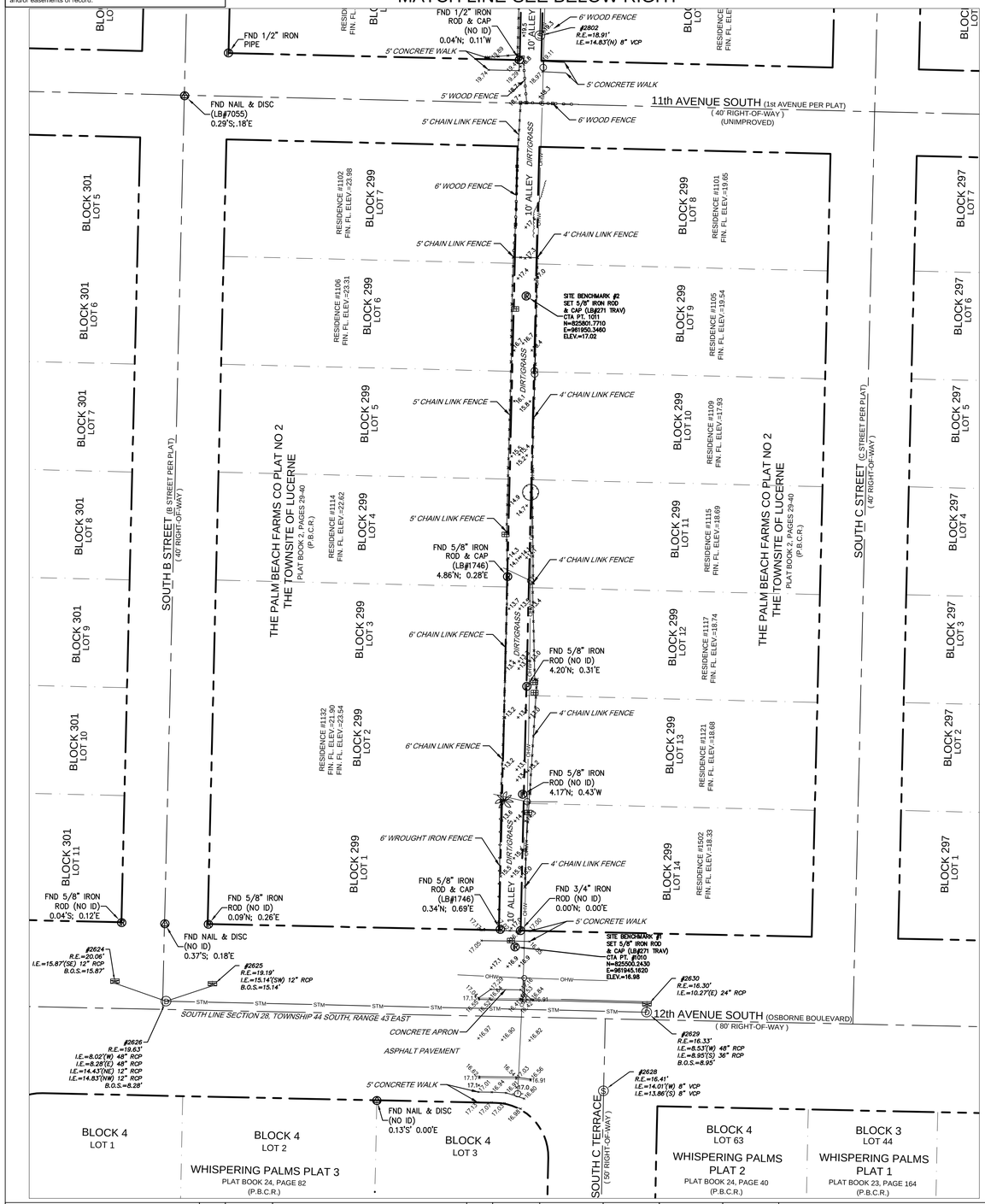

MATCH LINE-SEE ABOVE LEFT

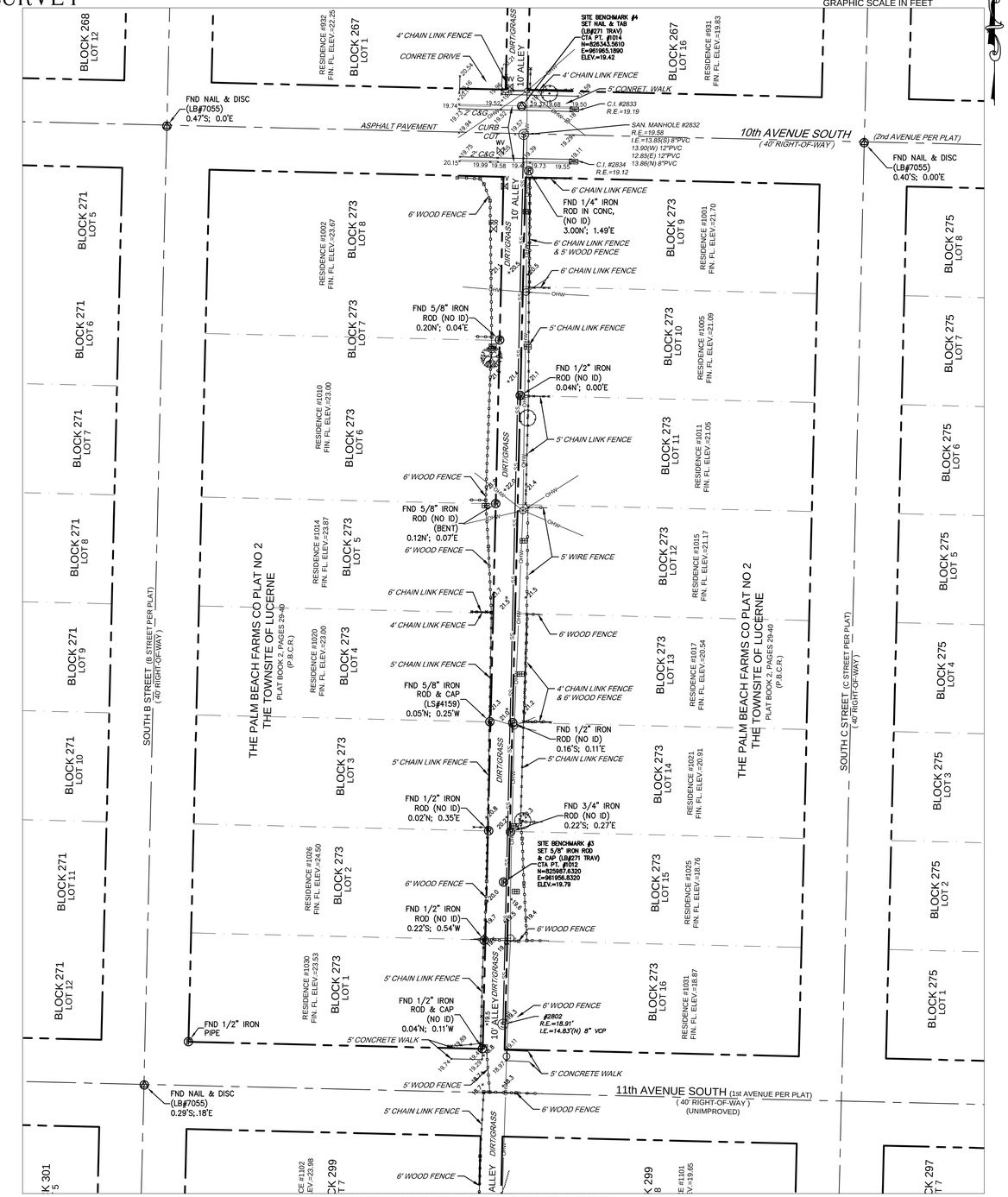

DESCRIPTION:	BY:	DATE:	DESCRIPTION:	BY:	DATE:

DATE:	10/08/2015	CHECKED BY:	T.S.
SCALE:	1"=30'	FIELDBOOK:	2703
DRAWN BY:	JDR	PAGE(S):	24-43

CRAVEN • THOMPSON AND ASSOCIATES, INC.
ENGINEERS • PLANNERS • SURVEYORS
3563 N.W. 53RD STREET, FORT LAUDERDALE, FLORIDA 33309
FAX: (954) 739-6409 TEL.: (954) 739-6400
FLORIDA LICENSED ENGINEERING, SURVEYING & MAPPING BUSINESS No. 271
FLORIDA LICENSED LANDSCAPE ARCHITECTURE BUSINESS No. C000114

COPYRIGHT 2015.

NEW SANITARY SEWER INSTALLATION & WATER MAIN
WATER MAIN RE-PLACEMENT-10th AVENUE S. TO
12th AVENUE S.-ALLEY BETWEEN S. B & S. C STREETS

TOPOGRAPHIC SURVEY
PREPARED FOR:
CITY OF LAKE WORTH

PROJECT NO. 15-0006-001-04

SHEET NAME V-2

SHEET 2 OF 2

G:\2015\15-0006-6th_AVE_SOUTH\Drawings\Base Map-Task Order 6.dwg [V-2] May 17, 2016 7:45am TSHAHAN