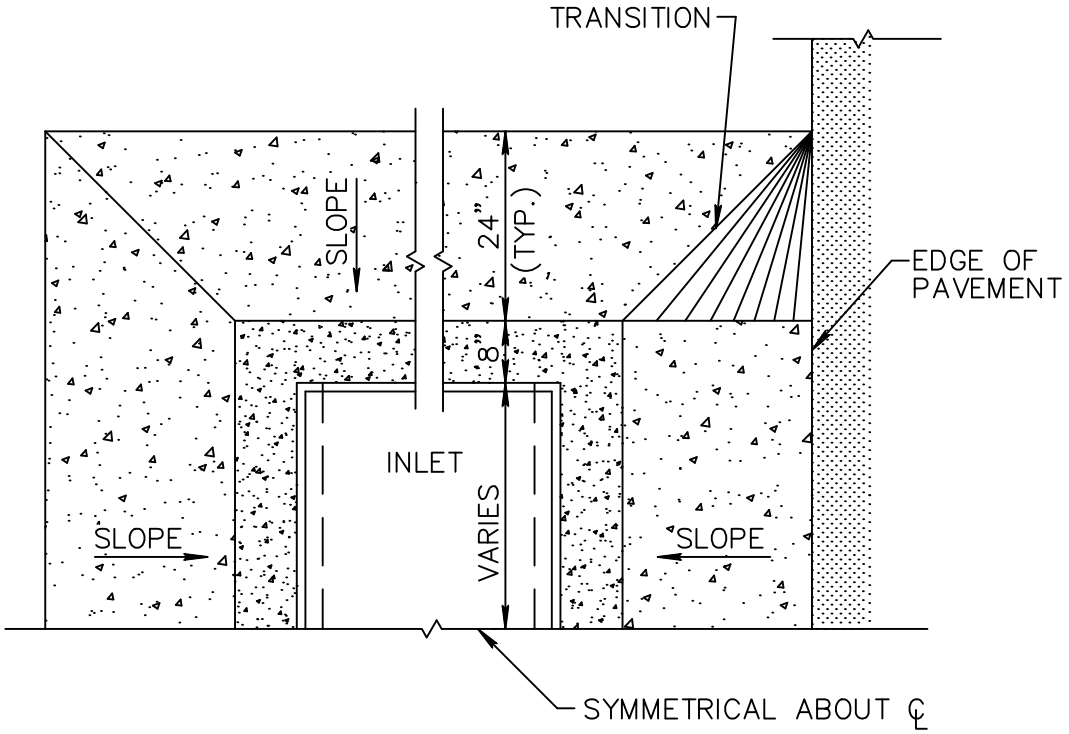


HALF PLAN

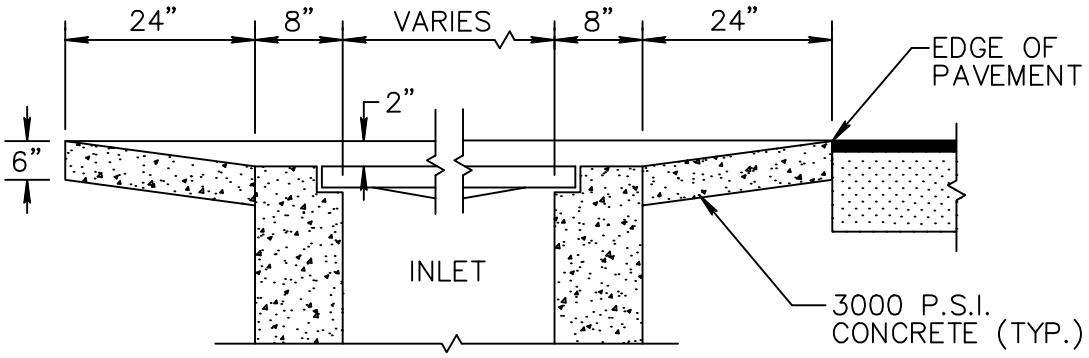


SECTION

CITY OF LAKE WORTH
PUBLIC SERVICES DEPARTMENT

INLET APRON DETIAL

DETAIL NO. 24

ISSUED: 09/18/13