City of Lake Worth
Department of Public Services
Policy and Procedures Manual

Comments or inquiries on the subject matter of this publication should be addressed to:

City of Lake Worth
Department of Public Services
1749 3rd Ave South
Lake Worth, FL 33460
561-586-1720
E-mail: jbrown@lakeworth.org

Table of Contents

Page No.

I. Introduction

Public Services in Florida 1
Title VI of the Civil Rights Act of 1964 1
Americans with Disability Act 2

II. Organizational Structure

Public Services Administration ..... 3 - 4
Streets and Stormwater Division ..... 5 - 6
Refuse and Recycling Division ..... 7 - 8
Grounds and Cemetery Division ..... 9 - 11
Fleet Maintenance Division 12
Building Maintenance Division 13

III. Public Services Divisional Policy and Procedures

Public Services Administration ..... 14 - 15
Streets and Stormwater Division ..... 16 - 50
Refuse and Recycling Division ..... 51 - 54
Grounds and Cemetery Division ..... 55 - 59
Garage/Fleet Maintenance Division ..... 60 - 91
Building Maintenance/Facilities Division ..... 92 - 97

IV. Construction Standards / Development Guidelines 98

Construction Engineering Standard Details ..... 99 - 137
Development Guidelines ..... 138 - 147
Contractor Prequalification Process ..... 148 - 171

V. Emergency Management

Introduction ..... 172 - 173
ESF1 Transportation ..... 174 - 203
ESF3 Public Works and Engineering 204

I. INTRODUCTION

PUBLIC SERVICES IN FLORIDA

Public works has always been, and will remain, the most important function performed by the majority of Florida municipalities. Historically, the vast majority of municipalities in the State performed this function nearly exclusively from other traditional municipal services. Even in urbanized areas and the heavily populated suburbs, public works typically receives more attention from municipal customers (residents, tax payers, property owners, and citizens) than the other visible and important services – police, ambulance, and fire protection. We call upon our emergency services when in need, however, we demand our public works services on a daily or, at least, weekly basis.

The importance of public works is diminished only to the extent that expected service levels are maintained. The efficient provision of utility service to residential, commercial, or industrial customers is critical to quality of life and safety of a community. Economic development is made more difficult if inefficient utility operations or degraded transportation systems are typical in a community.

TITLE VI OF THE CIVIL RIGHTS ACT OF 1964

Title VI, 42 U.S.C. § 2000d et seq., was enacted as part of the landmark Civil Rights Act of 1964. It prohibits discrimination on the basis of race, color, and national origin in programs and activities receiving federal financial assistance. As President John F. Kennedy said in 1963:

"Simple justice requires that public funds, to which all taxpayers of all races [colors, and national origins] contribute, not be spent in any fashion which encourages, entrenches, subsidizes or results in racial [color or national origin] discrimination."

If a recipient of federal assistance is found to have discriminated and voluntary compliance cannot be achieved, the federal agency providing the assistance should either initiate fund termination proceedings or refer the matter to the Department of Justice for appropriate legal action. Aggrieved individuals may file administrative complaints with the federal agency that provides funds to a recipient, or the individuals may file suit for appropriate relief in federal court. Title VI itself prohibits intentional discrimination. However, most funding agencies have regulations implementing Title VI that prohibit recipient practices that have the effect of discrimination on the basis of race, color, or national origin.

The City of Lake Worth prohibits discrimination on the basis of race, color, and national origin and conducts its governmental affairs in accordance with the Civil Rights Act of 1964. The United States Department of Justices' Civil Rights Division enforces civil rights laws in a wide variety of contexts. You may submit a complaint or report a potential civil rights violation to the Civil Rights Division at (888) 736-5551 or (202) 514-3847.

AMERICANS WITH DISABILITIES ACT OF 1990

The Americans with Disabilities Act of 1990 (ADA) prohibits discrimination and ensures equal opportunity for persons with disabilities in employment, State and local government services, public accommodations, commercial facilities, and transportation. The ADA also requires newly designed and constructed or altered State and local government facilities, public accommodations, and commercial facilities to be readily accessible to and usable by individuals with disabilities.

The latest ADA accessibility construction standards can be located on the ADA website (www.ADA.gov) or directly at the website link below. If internet access is not available, the ADA Information Line is 1-800-514-0301.

http://www.ada.gov/regs2010/2010ADAStandards/2010ADAStandards.pdf

The City of Lake Worth's Public Services Department is actively committed to providing ADA accessible government facilities, public accommodations, and public right of way to persons with disabilities. The Public Services Department is actively altering existing facilities and public right of way with ADA accessible accommodations such as ADA curb ramps, hand rails, compliant sidewalks, and accessible restrooms throughout all public use facilities and right of way. The Department is engaged in inspecting its facilities and right of way and appropriately budgeting for the alteration of such facilities and right of way to ensure compliance in a meaningful and sustainable manner.

Public Services Policies and Practices with ADA Compliance:

- Identification and conversion of non-compliant curb ramps to meet ADA requirements, when technically feasible
- Identification and conversion of non-compliant public sidewalks to meet ADA, when technically feasible
- Identification and conversion of non-compliant public use and common bathrooms to meet ADA when technically feasible
- Construction of ADA accessible parking spaces and routes at all public buildings and parks
- Construction of at least one accessible entrance to public facilities for program accessibility
- All new facilities or additions to facilities shall be designed and constructed to meet the ADA design standards
- All new right of way improvements (sidewalks, curb ramps, crosswalks, signage, etc.) shall be designed and constructed to meet the ADA design standards

II. ORGANIZATIONAL STRUCTURE

The City of Lake Worth's Public Services Department consists of the following functions:

1. Public Services Administration
2. Streets and Stormwater Division
3. Refuse and Recycling Division
4. Grounds and Cemetery Division
5. Garage/Fleet Maintenance Division
6. Building Maintenance/Facilities Division

PUBLIC SERVICES ADMINISTRATION

Public Services Administration oversees the following Divisions – Streets/Stormwater Management, Refuse and Recycling Services, Grounds and Cemetery Maintenance, Fleet Maintenance, Building Maintenance/Facilities Management.

Public Services Administration – The Public Services Administration function has various duties and responsibilities. The Department's main focus is to provide safe, clean, and essential services to citizens and visitors of the City of Lake Worth. The Public Services Administration is responsible for all supervisory and administrative duties within the divisions incorporated under Public Services overseeing division budgets, schedules, personnel, equipment, and overall management. The Department's administrative members also provide support and coordination to city staff and citizens in need of all the multi-disciplinary functions of the department.

Public Events Coordination – All Public Services Divisions participate in coordinating city and community events by working with HOA representatives, civil organizations, and city staff. Specific responsibilities include participating in site planning activities and reviews, project management, and inspection services.

Capital Improvement Projects – Public Services Administration participates in site planning activities and reviews, project management and inspection services, environmental protection and conservation efforts, building permit review and inspections, code compliance within the public Rights-of-Ways, capital improvements to streets, parks, and other public facilities as well as maintenance and upgrade of the city-wide Storm Water system.

Grants Management – Public Services Administration works in conjunction with city staff to implement and adhere to grand regulations, assure grant projects are completed in a timely manner, and submit proper documentation to grant agencies for full reimbursement.

Public Services Director
(FTE - .20)

Assistant Public Services Director
(FTE -.50)

Public Services Coordinator
(FTE – .76)

STREETS AND STORMWATER DIVISION

The Streets/Stormwater Division works closely with Public Services Administration in keeping a clean and safe environment to live, work, and play by performing various daily tasks to maintain proper drainage and keep pollutants from reaching our inlets and drains that lead into coastal waterways. The Streets/Stormwater Division has certified technical staff and a fleet of heavy equipment that are active in our community.

Streets/Stormwater Maintenance

The Streets/Stormwater Division on a daily basis: records, inspects, repairs, and cleans stormwater pipe line with a Jet-vac truck, TV camera truck, two sweepers, and a fleet of heavy equipment and light utility trucks on standby. The Streets/Stormwater Division is responsible for four (4) retention/detention ponds, 46 outfalls, 850 manholes, 1,900 catch basins, and 55 miles of underground pipes.

Stormwater (NPDES) Permit Management

The Stormwater Division also maintains structural controls as per National Pollutant Discharge Elimination System (NPDES) permit requirements. This division conducts inspections and maintains internal records for the City's Municipal Separate Storm Sewer System (MS4) permit, by keeping the system according to schedule, documenting inspections, and maintaining activities performed on structural controls owned, operated, and maintained by the City.

Streets

The Streets Division is responsible for maintaining 98 miles of paved roads and 8 miles of unpaved roads within the City limits. This division inspects form boards for curb cuts, demolitions, silt fencing, dumpster enclosures, sidewalk repairs, and new construction. This department also makes needed repairs to sidewalks, curbs, and gutters when called upon to do so by other departments due to projects that require the assistance of the division. This division grades unpaved roads, repairs pot holes, installs signs, paints stops bars and crosswalks, and cleans drains before and after rain events and major storms.

*This Division plays an important role in the Emergency Support Function-1 (ESF-1) of the City of Lake Worth Comprehensive Emergency Management Plan (CEMP). See the City CEMP for details.

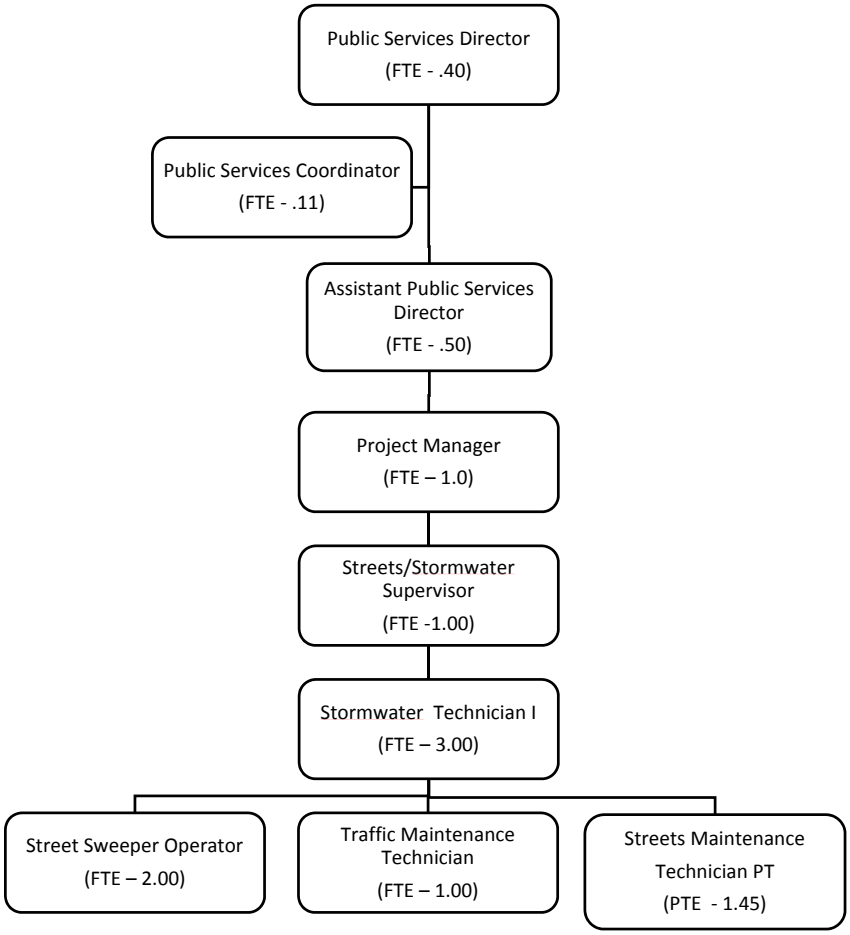
Public Services Director
(FTE - .40)
Public Services Coordinator
(FTE - .11)
Assistant Public Services Director
(FTE - .50)
Project Manager
(FTE – 1.0)
Streets/Stormwater Supervisor
(FTE -1.00)
Stormwater Technician I
(FTE – 3.00)
Street Sweeper Operator
(FTE – 2.00)
Traffic Maintenance Technician
(FTE – 1.00)
Streets Maintenance Technician PT
(PTE - 1.45)

REFUSE AND RECYCLING DIVISION

The Refuse Division oversees:

Refuse Office Administration, Residential Services, Commercial Services, Recycling Division, and Roll off Dumpster Services.

Refuse Division

The Refuse Division mission is to work to provide exceptional refuse service for the residential and commercial customers of the City of Lake Worth. The Refuse Division is committed to working with the residents, businesses, and all city departments in an effort to keep and enhance the beauty of the community.

Office Administration

The Refuse Administration is responsible for all supervisory and administrative duties in the Refuse Division. Administration creates weekly schedules, establishes routes, inspects equipment, schedules equipment maintenance, and handles customer inquiries and service requests.

Residential Services

The Residential Services Division is responsible for providing timely and safe household refuse curbside collection from residences and small businesses twice a week. Both automated and semi-automated loading vehicles are utilized for this purpose.

Commercial Services

The Commercial Services Division is responsible for providing the collection of commercial bins, compactors, and roll-off containers to customers who must, by City Ordinance; use commercial container service (dumpsters) to dispose of their refuse. Customers are primarily businesses and multi-family residential complexes. Both front-end and semi-automated vehicles specially designed to pick up bins and empty containers are used to provide this service. The City currently provides collection service from one day a week to six days a week, depending on volume**.**

Recycling Services

The Recycling is responsible for implementing, monitoring, and administering the Department's comprehensive recycling program. This includes curbside and multi-family recycling, yard waste recycling, office paper, and commercial recycling programs.

Roll-off Services

This is a service provided solely by the City of Lake Worth Refuse Division. Roll-off containers are primarily for medium to larger sized jobs and this service is offered at competitive pricing. The division will continue to educate citizens on the proper usage of this service.

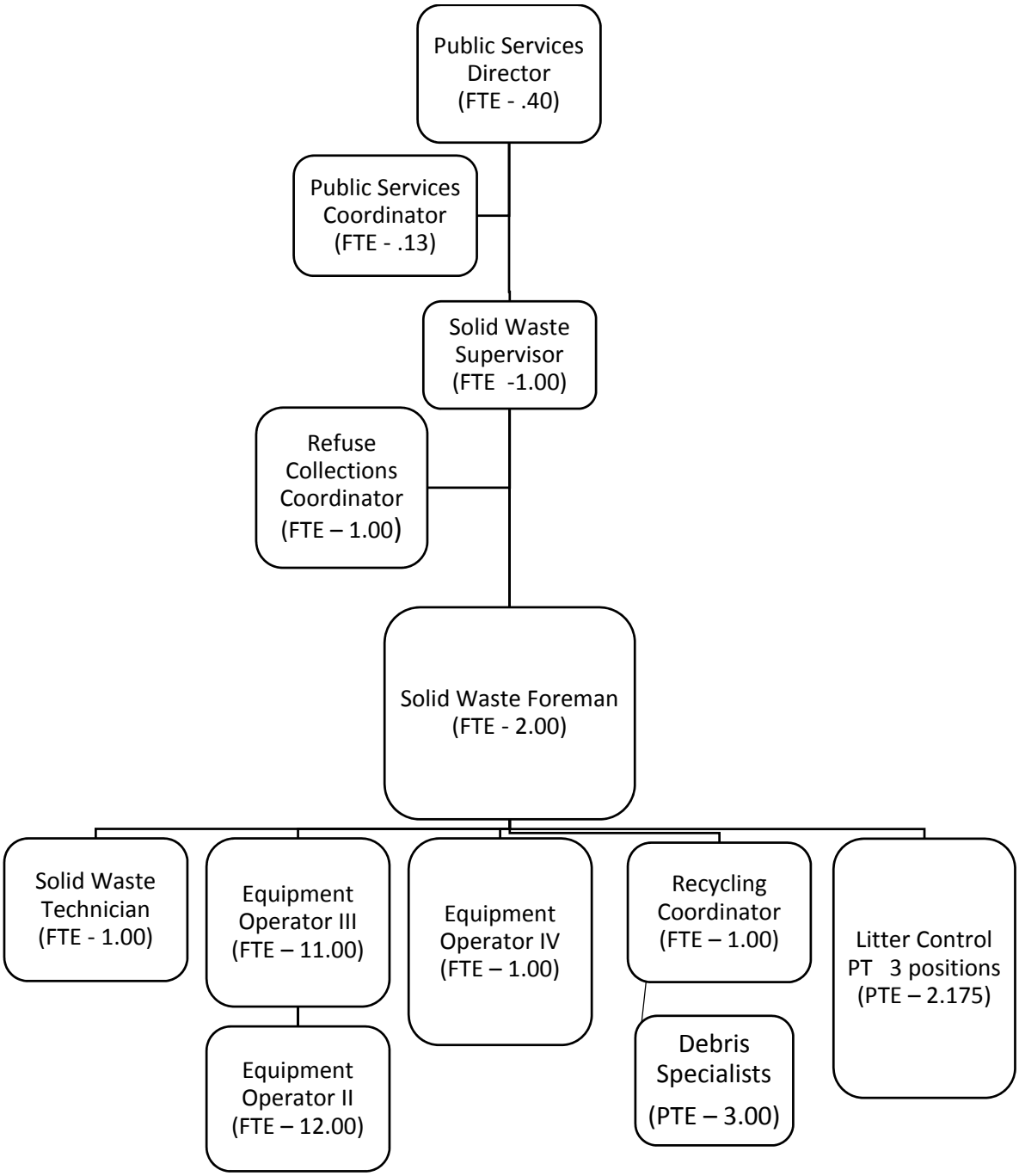
Public Services Director (FTE - .40)
Public Services Coordinator (FTE - .13)
Solid Waste Supervisor (FTE -1.00)
Refuse Collections Coordinator (FTE – 1.00)
Solid Waste Foreman (FTE - 2.00)
Solid Waste Technician (FTE - 1.00)
Equipment Operator III (FTE – 11.00)
Equipment Operator II (FTE – 12.00)
Equipment Operator IV (FTE – 1.00)
Recycling Coordinator (FTE – 1.00)
Debris Specialists (PTE – 3.00)
Litter Control PT 3 positions (PTE – 2.175)

GROUNDS AND CEMETERY MAINTENANCE

Landscape maintenance at city owned buildings

The Grounds Maintenance Division is responsible for all landscape maintenance at city owned buildings such as City Hall, the City Hall Annex, Library, Shuffleboard Building, Osborne Community Center, Utilities Administration-Warehouse, Streets/Stormwater/Refuse building, Safety Complex, Fire Station #2, and the Public Services Administration Complex. The Maintenance at these locations includes all lawn, tree, and shrub maintenance including mowing, blowing, trimming, chemical weed control, and trash and debris removal.

Landscape and janitorial maintenance at all parks

This Division is also responsible for the landscape and janitorial maintenance at all parks; Howard Park, South Palm Park, Bryant Park North and South, Constitution-Blue Star, Sunset Ridge Park, Spillway Park, Barton Park/Beach, Triangle Park, Old Bridge Park, Cultural Plaza, and athletic field common areas including all mowing, blowing, hedge trimming, tree trimming, trash pick-up, empting of trash cans, and planting. An integral part of the Grounds Maintenance duties in these areas is janitorial maintenance of the park pavilions and restrooms utilizing Grounds Keepers, which includes restocking toiletry items, cleaning toilets/sinks blowing and/or hosing of picnic pavilions.

Maintenance of medians and right of ways

Due to numerous Interlocal agreements, the Grounds Maintenance Division is tasked with the maintenance of medians and right of ways, many of which are not owned by the city or are out of the city limits. These areas are Interstate I-95 interchanges and right of ways (State), Lake and Lucerne right of ways, round-about, and tree wells (State), Dixie Highway (State), Federal Highway (State), A-1A median (State), 10th Ave North (City/CRA), 6th Ave South (County/CRA), Boutwell Rd (County), South Palm Way Blvd (City), and Wingfield Street (City). The current Interlocal agreements require the City to assume all maintenance in these area including tree and hedge trimming, mowing, chemical weed control, trash pick-up, emptying of garbage cans, and maintenance of irrigation systems.

Mowing of vacant lots

The Ground Maintenance Division also manages the contract for the mowing of vacant lots and foreclosed properties that are owned by the city. This includes mowing, trash pickup, and the reporting of unsafe conditions such as unsecured areas of entry and possible squatters.

Unpaved rights of ways and streets

The division also maintains the vegetation in unpaved rights of ways and streets which including periodic mowing, invasive vegetation removal, and trash pickup.

Maintain closed landfills

The Grounds Maintenance Division manages the contract to maintain two (2) closed landfills. The maintenance is these areas includes mowing, weed control, tree trimming, fence/gate repair, and clearing of methane pits and testing wells.

In February of 2013, the City received official notice that it had fulfilled its post-closure permit requirements for monitoring the landfill per the Florida Department of Environmental Protection (FDEP) and the Palm Beach County Health Department. The permit requirements consisted of 20 years of semi-annual methane monitoring and ground water sampling via monitoring wells. Upon successfully completing the monitoring, the methane monitoring wells and ground water monitoring wells were backfilled with neat cement grout.

Special event services

This Division also provides setup assistance, clean up, and custodial services for all City sponsored/co-sponsored events (including those by the Chamber of Commerce) such as the City Holiday Parade, Veterans Day celebration, Street Painting Festival, Reggae Fest, Tropic Fest (fourth of July), and the Tropical Triathlon. This Division also provides cleaning and custodial services at all other events that are held in City parks and on City properties. All of the events impact the Division's operating budgets.

Downtown and supplemental watering

The Division also utilizes a water truck to water all trees and pots in the Lake and Lucerne corridor, newly planted trees and shrubs, and other locations that do not have an automatic irrigation system which is vital to the survival and vigor of the plants.

Tree Board Support

The Grounds Maintenance Division supports the Lake Worth City Tree Board by assisting with the Annual Festival of Trees and maintaining the Tree Board's City web page by posting notices, agendas, and minutes.

Cemetery Operations

The City of Lake Worth owns two active cemeteries; Pine Crest and I.A. Banks. The Grounds Division is responsible for the maintenance and administration of these cemeteries. The main responsibilities are providing year-round burial services for residents and non-residents. The cemetery employees prepare grave sites for burials and interment of cremated remains including digging graves, preparing site for services by placing the casket lowering device, artificial turf, and erecting/dismantling tents after the service. Employees assist visitors in finding graves, coordinate with funeral homes, show lots for sale, answer questions in person and over the phone, and work with the City Clerk's Office to maintain accurate records of burials. The cemetery workers also perform landscape maintenance of 18.75 acres including all tree/shrub trimming, mowing, edging, and weed whacking around 7,913 headstones. The City is responsible for perpetual maintenance of the cemetery grounds including all landscape maintenance, maintenance of roads and walk ways, and records.

GROUNDS

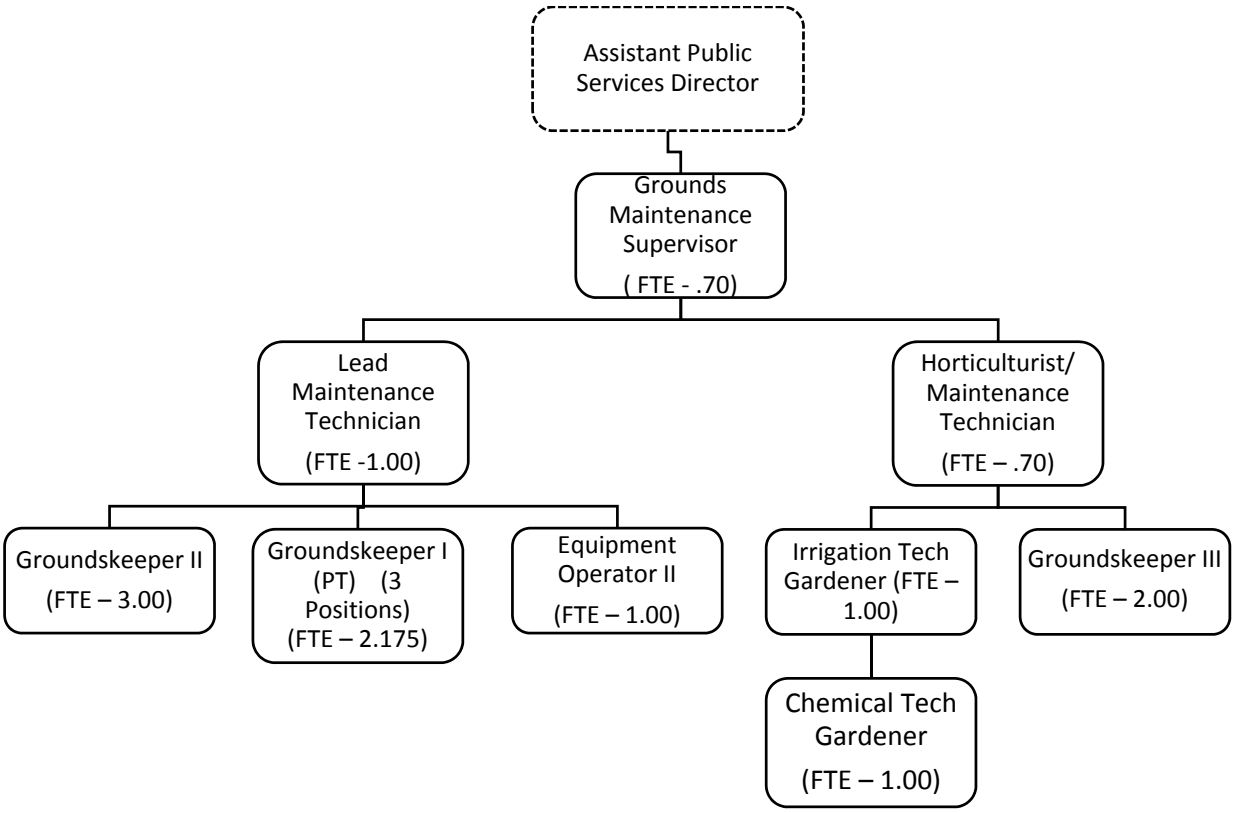

CEMETERY

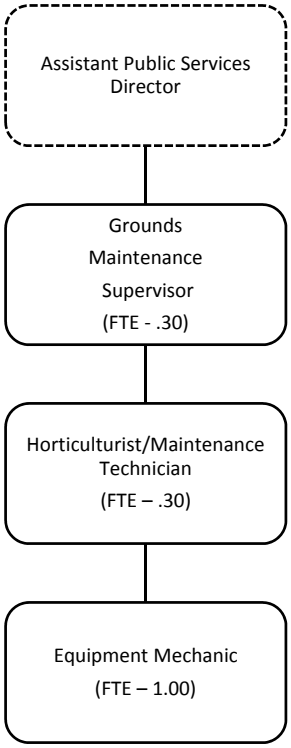

FLEET MAINTENANCE

The Garage/Fleet Division is responsible for the maintenance and repair of all City owned vehicles and equipment. As an internal fund, the Division has divided its services into three levels:

1. ½ ton and under (passenger vehicles and small trucks)
2. ½ ton to 1 ton trucks/vehicles O
3. Over 1 ton trucks and heavy equipment

Fleet replacement is monitored on an annual basis and scheduled according to vehicle age, mileage, and/or condition.

The Garage/Fleet Division is handled in-house as feasible based on the type of equipment and in accordance with current allocated budget. The garage division also handles tire mounting, service calls, and monthly administrative fleet management reporting on fuel usage.

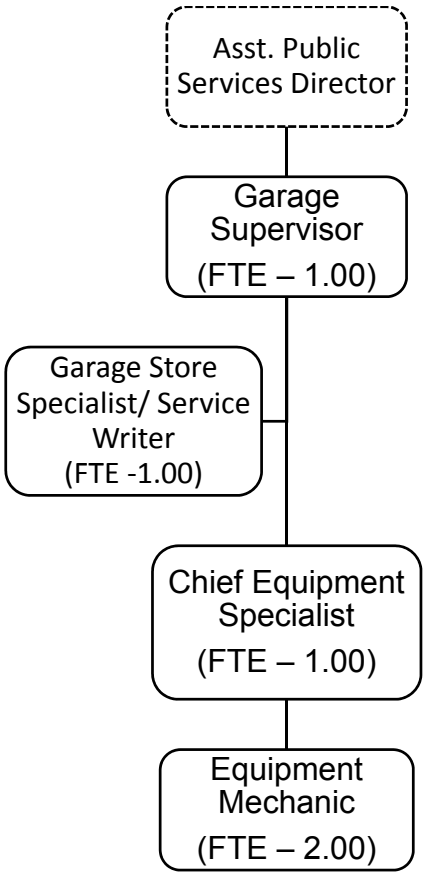

BUILDING MAINTENANCE/FACILITIES

The Building Maintenance/ Facilities Division administers both-in-house and outsourced service contracts, such as pest control, fire, and security protection for City-owned facilities. In-house services include carpentry, electrical, air conditioning, painting, plumbing, and ancillary functions.

The Division provides setup assistance for all City sponsored/co-sponsored events including the Holiday Parade, Street Painting Festival, Reggae Fest, Tropic Fest (July 4th), Tropical Triathlon, and St. Patrick's Day Parade. They also provide banner installation services, tents/tables/chairs placement and removal, lighting, and on call or assigned electrician responsibilities for events.

Non-scheduled maintenance tasks include assisting all departments in federal and state regulated storage of public records, moving of furniture, boxes, performing flag raising ceremonies, and providing public address systems for events.

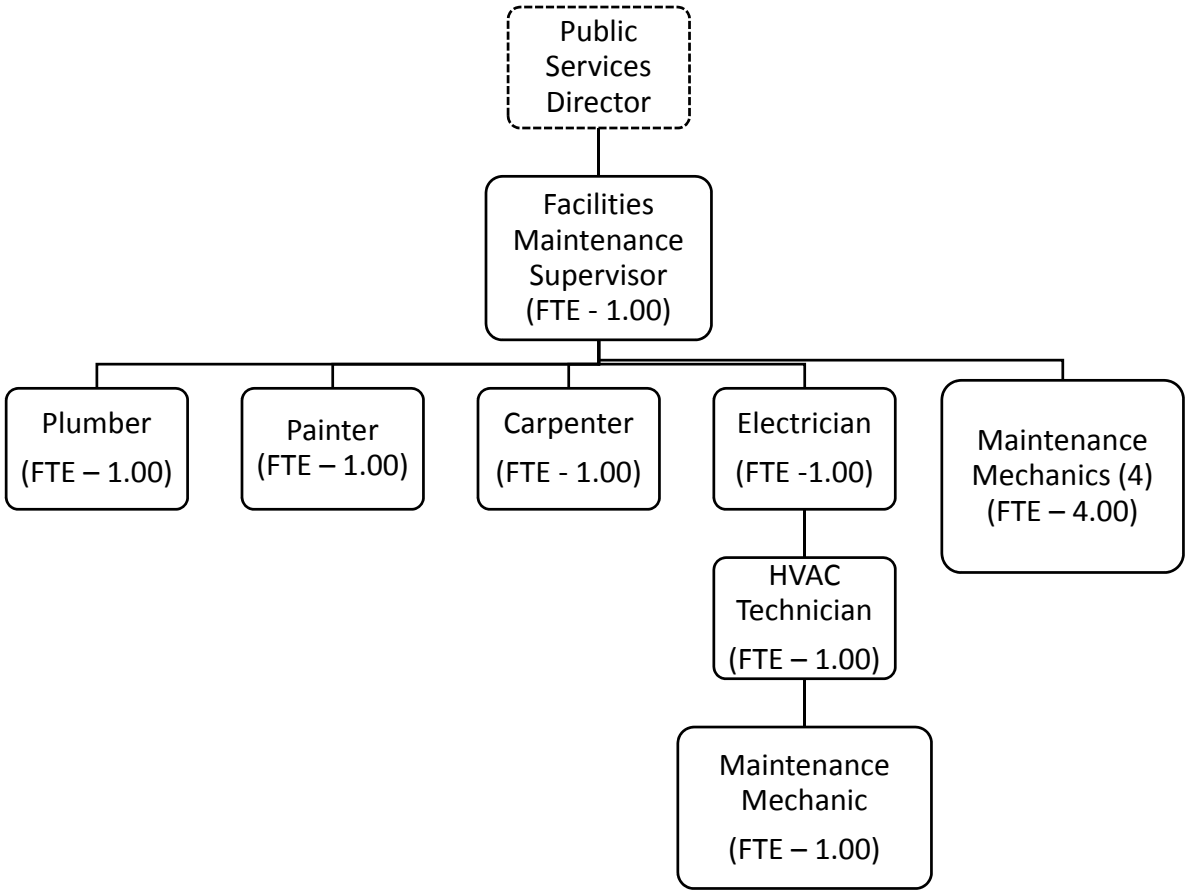

III. PUBLIC SERVICES DIVISIONAL POLICY AND PROCEDURES

PUBLIC SERVICES ADMINISTRATION

The engineering and construction function for the City of Lake Worth is provided through the Administration Division and provides as a minimum the following:

- Engineering standards for new and reconstructed infrastructure and subdivisions.
- Procures design services for public works infrastructure projects.
- Permitting and inspection of work in the public right-of-way.
- City liaison to the Florida Department of Transportation
- Project coordination with the Water and Sewer Utilities Department
- Coordination with the Electric Utilities Department
- Long-term planning for future Public Services projects.
- Up to date knowledge on current governmental regulations affecting Public Services operations
- Project Management and Inspections

Maintenance of Efficient Design

Maintenance represents a major part of the City of Lake Worth's buildings and infrastructure assets with substantial associated costs over the life of that facility. When looking at the life of a facility starting from the development concept, there are four major considerations – planning, design, construction, and maintenance. Maintenance starts with planning and design. If maintenance is not planned into the asset, maintenance costs and frustrations can become major problems. A minor change in design may result in major savings in future maintenance.

Maintenance of efficient design demands the involvement of maintenance personnel and is not only the responsibility of the maintenance supervisor. Public Services staff should recognize the importance of maintenance and all play an integral part in the process. Staff works together to establish these processes by which maintenance occurs and becomes integral to the planning and design of all new facilities.

What are these responsibilities?

- For Elected Officials:
  Develop the ability to relate maintenance costs to design features and level of service to aid in decision making. Establish policy and procedures to insure clear lines of communication between planners/designers and maintenance personnel and insure maintenance input into all phases of design and development**.**
- For Manager/Administrators:
  a. Develop a format to convey how future maintenance costs relate to decisions made during initial planning.
  b. See that elected officials have cost projections and information on design, maintenance, and service alternatives.
  c. Adopt design criteria, maintenance standards, and facility checklists for practical guidance of new facility design.
  d. Assure maintenance participation in the planning and design processes.
  e. Give firm direction during design process that maintenance impacts are essential and are to be considered during design.

- For Planners, Designers:
  a. Recognize the importance of maintenance in the overall facility use.
  b. Discuss with maintenance staff, the purpose, use, design concepts, and construction methods.
  c. Work with maintenance personnel to determine maintenance tasks.
- For Maintenance Supervisors:
  a. Mobilize support of all line staff to improve design – tapping expertise of every individual.
  b. Keep accurate records of maintenance – how performed, what frequency, etc.
  c. Observe and document the effect of design on maintenance operation and use behavior.
  d. Provide feedback on advantages/disadvantages of design features to designers and manager/administrators.
  e. Stay current on products, equipment, and trends in maintenance and provide this information to designers and administrators/managers.

Public Services Plan Reviews and Inspections

a. Public Services is responsible for reviewing plans for construction activity and for Site Plan reviews prior to construction work and permitting.
b. Public Services reviews, comments, denies, and approves applications submitted for permitting. Some of these include site plan review, curb cuts, sidewalks, stormwater improvements, etc.
c. For any work occurring in the public right of way, an applicant must complete a "Right of Way/Utility Permit" application and submit the proper documentation as outlined on the permit application form.
d. Public Services is responsible for construction inspections for the following categories:
    i. Silt fence (installation inspection and final inspection)
    ii. Curb cut (formboard inspection and final inspection)
    iii. Roadway (Subgrade, Baserock, Densities, Asphalt lifts, Striping/Signage)
    iv. Landscaping (Material inspection and Final inspection)
    v. Sidewalk (Formboard inspection and Final Inspection)
    vi. Curb ramps w/ ADA surface (Formboard and Final)
    vii. Stormwater utility (Material inspection, Progress Inspections, Final)
    viii. Sidewalk Café permit
    ix. Right of Way Use permit
    x. Maintenance of Traffic / Road Closure permits
    xi. Other associated improvements within Right of Way
e. Inspections must be scheduled a minimum of 48 hours in advance by contacting Public Services at 561-586-1720.
f. Inspections must be accompanied by an approved "Right of Way/Utility Permit" application, otherwise the inspection will result in a "Failed" outcome.
g. The plan review, inspection schedule, and associated fees are outlined in the City's "Schedule of Fees and Charges for Service" as adopted by the City Commission.

Public Services Construction Standards

The construction standards for the City of Lake Worth's Public Services Department are provided in "Section IV: Construction Standards and Development Guidelines". The City also adheres to the latest design standards as provided by the Florida Department of Transportation.

STREETS AND STORMWATER DIVISION

Streets Overview

The City of Lake Worth has jurisdictional responsibility for many different types and classifications of roads within the transportation system. Many factors such as age, development type, traffic loads, use, and future transportation needs affect the maintenance and rehabilitation planning for the system. Public roadways provide access to and from private property. The City of Lake Worth currently maintains over 143 miles of roadways of various street types and categories within the municipal boundary. For purposes of establishing budget allocations and rehabilitation priorities, and performing maintenance activities based on established maintenance policies, city streets have been divided into three (3) street type categories – Collector, Local, and Unimproved. Inspections levels are based on visual inspection and Pavement Condition Index (PCI) as defined by the American Society for Testing and Materials (ASTM) standard (D6433-99).

The complete inventory is represented in the chart below:

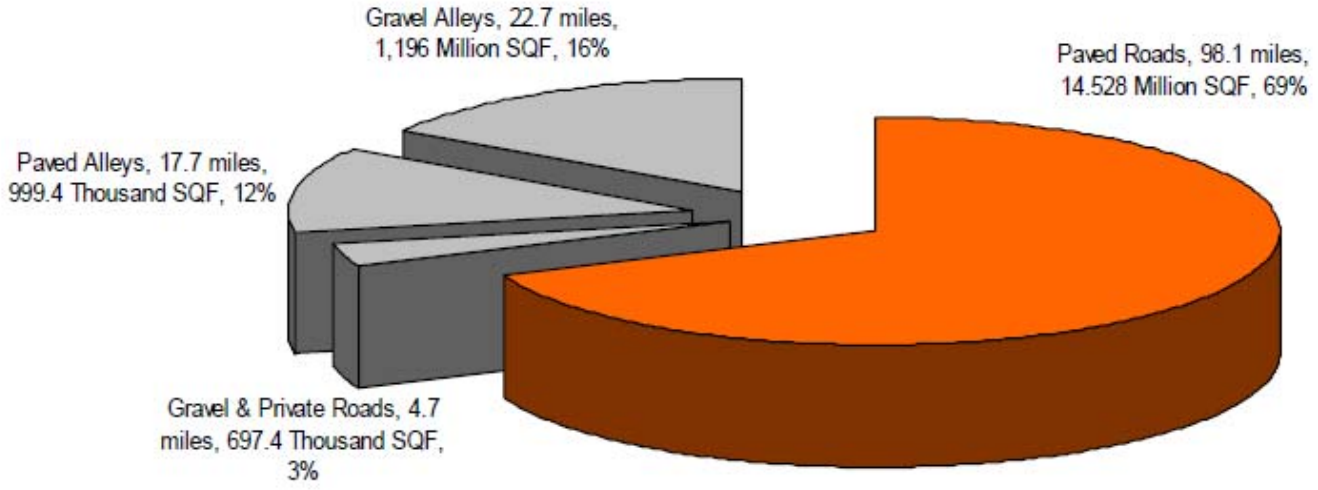

Roadway Types and Classifications

Roadway Types

Paved Roads and Alleys: Asphalt streets that are designed and constructed to City standards. Drainage is provided by a designed stormwater conveyance system. These roadways also may have sidewalks, curb and gutters, landscape features and hardscape features. Included in this category are collector and local roads, although some may not have curb and gutter, sidewalk, landscaping or hardscaping. Per the City's Comprehensive Plan adopted October 20, 2009, the City has adopted service level C/D for all roadways in its jurisdiction with the exception of 10th Avenue South west of I-95, which is service level E due to limitations of insufficient right-of-way, adjacent development, or inadequate area for expansion.

Unimproved Gravel Roads and Alleys: City right of way that is constructed with shellrock, crushed concrete or other stable material, with no curb or gutter, no designed stormwater conveyance system, and for which construction improvements are yet to be performed. These streets were typically constructed as temporary or through access gravel roads, prior to major development in the area. Most streets in this category do not have any type of designed stormwater conveyance system. Street drainage is usually by roadside ditches, retention systems, passive systems, i.e. graveled shoulders, and approved constructed drainage systems.

Unimproved Rights-of-Ways: Undeveloped rights-of-way that have never been surfaced to accommodate all weather use. Abutting property owners are responsible for all maintenance within these rights-of-way. The quantity and associated vehicle weight of traffic using streets is a critical factor affecting the rate at which a pavement and roadbed deteriorates. The City of Lake Worth divides its streets into 3 categories called functional classifications (FC) each representing a different volume and type of vehicular usage.

Roadway Classifications

MAJOR COLLECTOR – Major Collectors are non-residential roadways made for moderate capacity and can include roads in Industrial areas. They typically carry more than 2,500 vehicles per day. Major Collectors in the City of Lake Worth are roads such as Lake Avenue, Lucerne Avenue, 6th Avenue South, 10th Avenue North, Boutwell Road, and Detroit Street.

MINOR COLLECTOR (Residential) - Minor Collectors are found only in residential neighborhoods and provide a high degree of access to individual properties in a neighborhood. They typically carry between 1,500 and 2,500 vehicles per day. Inspection frequencies and levels will be completed on an annual basis visually by the Streets Division. Minor Collectors in the City of Lake Worth are roads such as 1st Avenue South (east of Dixie Highway), 2nd Avenue North, 4th Avenue South (west of Dixie Highway), 7th Avenue North, and 13th Avenue North.

LOCAL - Local streets primary function is to provide access to individual property along the roadway. They are narrow, slow-speed, and low-volume service facilities. They typically carry fewer than 1,500 vehicles per day, and receive low priority maintenance. Inspection frequencies and levels will be completed on a three year rotation.

UNIMPROVED GRAVEL – Unimproved gravel roadways are dedicated right of way that is yet to be improved and serves as access to water and sewer utilities, electrical utilities, and green spaces for neighborhood residents. These unimproved gravel right of ways are being designed into new Local roadways and City Greenways.

The following policies and procedures outline maintenance practices to avoid confusion and provide for consistent maintenance practices.

PRESERVATION AND MAINTENANCE RESOURCES

For the purpose of scheduling maintenance resources for all streets, and/or funding of street preservation and/or rehabilitation projects, the following priorities will apply:

Maintenance Priority	Type	Pavement Functional Class	Condition*
Highest Priority	Paved roads	Collector (Major)	PCI >75
Medium Priority	Paved roads	Collector (Residential)	PCI >70
	Paved roads	Local	PCI>70
Low Priority	Gravel roads	Unimproved gravel	PCI=N/A
	Paved alleys	Local	PCI=N/A

* Established street maintenance goal for minimum PCI rating.

* Maintenance is continued at given PCI level until condition level falls below a PCI < 55.

* City wide average PCI rating is 76.71 according to the study performed by ADA Engineering in 2013.

RECONSTRUCTION PRACTICES

The Public Services Director will be responsible to keep a list of streets that need to be reconstructed and the prioritization of that reconstruction. Once a street has outlived its useful life and its associated PCI rating falls below PCI=55 threshold per the scale provided below, preservation and maintenance will revert to maintaining only hazardous conditions.

The following criteria will be used to evaluate streets to determine if they need to be reconstructed:

* Preservation no longer cost effective
* Pavement Condition Index (PCI) warrants reconstruction (PCI<55)
* Capacity problems
* Safety issues
* Subgrade and base failure
* High crown
* Traffic calming
* Functional class has changed
* Curb and gutter failure

The Public Services Director will be responsible for evaluation and placement of streets on the Reconstruction List, in accordance with the Road Network Master Plan utilizing the Micro Paver system. Fully improved roadways and alleyways that have outlived their useful life will be placed on the Reconstruction List for utilization of capital project funds and will be maintained only to mitigate hazardous conditions.

PRESERVATION AND MAINTENANCE OF FULLY IMPROVED ROADWAYS

Fully improved roadways will receive the highest level of maintenance. Preventative maintenance designed to extend the life of the asset will be of high priority. Streets will be placed on the maintenance list when the PCI rating indicates overlay OR mill and overlay treatment needed (PCI > 56). These streets will be swept and flushed on a scheduled basis, will have high priority for pothole patching, will receive skin patching and segment overlays as necessary, will have alligatored areas dug out and replaced, will receive scheduled crack sealing, and have base failure repaired. Maintenance efforts will be made to help prevent street PCI from falling into the reconstruction level (PCI<55).

All work will comply with City standards from the time of acceptance by the City until such time the road has exceeded its useful life. When the street is determined to have exceeded its useful life through the Road Network Master Plan study, it will be placed on the Reconstruction List. From that point, until the street is reconstructed, maintenance of the asphalt and curb and gutter shall be minimal, serving only to eliminate hazardous surface conditions. The level of street sweeping and flushing will not change.

Property owners are responsible for maintaining vegetation in the public right-of-way from their property line to the centerline of the roadway, per City municipal code. Grass and weeds must be maintained per code. Vegetation must be maintained so that it does not encroach into the street or sidewalk and so that it does not create a traffic sight triangle hazard. Trees rooted on private property must be limbed up 10.5 feet above the sidewalk and 15 feet above the street. Trees rooted in the public right-of-way which are obstructing streets or sidewalks are maintained by the City's Grounds Division.

Dig Outs/Base Failure: The Street Maintenance Supervisor will routinely schedule removal and replacement of alligatored and failed sections of pavement as needed. Over excavation and base stabilization will be performed as needed. The perimeter of all dig outs shall be saw cut. Areas should be swept and clean. Edges will be coated with CSS-1 asphalt emulsion or equivalent.

Asphaltic concrete will be replaced to a minimum thickness of 2" or to the depth of the existing asphalt, whichever is greater, not to exceed a depth of 1 foot. Asphalt shall be placed and compacted in lifts not to exceed 2 inches each. If a failed area is within 3 feet of a defined joint, removal shall be to the joint. Asphalt should be placed at a temperature of 250 to 300 degrees Fahrenheit. Initial rolling must occur before the temperature is below 200 degrees Fahrenheit. Where appropriate, a straight edge will be used to ensure a bump or sunken area does not occur. All proposed dig out locations will be recorded with the utility locating service for utility locates 48 hours prior to commencement of the work. When emergency repairs are necessary, emergency utility locates will be phoned in before work may commence.

Any block needing more than 500 square feet of repair must be approved by the Public Services Director before any work is done by Street Maintenance Division crews. The City's Annual Contract for Paving, Concrete and Striping shall be utilized when appropriate and as determined by the Department Director.

Overlays: The City does not possess the staffing levels or equipment to perform effective and proper milling and overlays of its roadway network. Overlay work shall be either performed utilizing the annual contract or bid out following the City's procurement process.

1. Contract overlays:
   a. Each year a prioritized list of proposed contract overlays according to the Roadway Master Plan will be reviewed and considered as capital improvement projects to be budgeted accordingly.

   b. Maintenance Division and Public Services Administration will work together to finalize the list of streets to overlay by contract, dependent upon available funds. The list should be finalized and ready for contract advertising by May 1 of each year. A copy of the finalized list will be taken to Maintenance Division/Traffic Operations Section for coordination of pavement marking restoration can be scheduled to take place after completion of the overlay.

   c. Curbs and gutters shall be inspected for each project. Needed repairs shall be included as part of the overlay project contract initiated by Engineering. Gutters should not be overlaid with asphalt.

   d. If sidewalk ramps are lacking within the overlay project, their construction shall be included as part of the overlay contract and constructed to meet ADA standards. Existing sidewalk in need of minor repair shall be scheduled for repair shall be scheduled for repair prior to the overlay.

   e. Necessary base stabilization and removal of alligatored areas will be performing as part of the overlay.

   f. Necessary crack sealing, roto-milling, vegetation removal or other surface repair will be part of the overlay contract awarded.

   g. The contractor will be responsible for all sweeping, erosion control, dust control, traffic control, temporary traffic control, maintenance to private driveways and properties, and maintaining a clean site.

   h. Concrete streets should not be overlaid with asphalt. Concrete slabs that have failed should be removed and replaced. Exceptions to this rule must be approved by the Public Services Director.

   i. Coordination with utilities is required to ensure that we are not overlaying a street just prior to a utility project.

Potholes: Potholes will be routinely scheduled for repair by the Street Maintenance Supervisor. Hazardous potholes (3” or deeper) reported to Maintenance by the public through work requests shall have immediate priority. These potholes will be filled with high performance cold mix if hot mix is not available. The procedure for patching potholes on improved streets will be as follows:

1. Square the hole up using an asphalt cutting saw, removing existing asphalt and base to a 6” depth.
2. Clean and dry the hole as much as possible.
3. Coat the edges with CSS-1 asphalt emulsion or equivalent when using hot mix asphalt.
4. Depth should be 6”, 4” baserock compacted and 2” hot mix asphalt.
5. When hot mix is not available high performance polymer cold mix is utilized. All potholes patched with high Performance polymer cold mix on improved streets are to be documented.
6. Compact the asphalt with a roller or vibratory plate compactor. Wheel rolling is not acceptable when Pothole patching permanent streets with hot mix. Wheel rolling is acceptable for cold mix when it is not practical to use a roller or compactor.

Right-of-Way Cuts: Right-of-Way cuts will be performed in accordance to Utility and Right-of Way Permits. Right-of-way cuts which have sunken or otherwise need maintenance are the responsibility of the company or person owning the utility or facility. Generally, if any part of the cut deviates more than ¾” from the finished surface street grade, it should be repaired. Cuts made by utilities or private permitees that need maintenance will be reported to the Streets Supervisor. The Streets Supervisor will notify the appropriate utility or person in writing of the required maintenance and give them a date to complete the work. Severity of the defect, type of repair, weather conditions and availability of asphalt will be considered when establishing the date. If the work is not performed in a timely manner, the City may complete the work and bill the responsible utility, company or person for all costs.

Curb and Gutter: Failed curb and gutter sections will be scheduled for repair by contracting out the work. Contractor may routinely remove and replace up to 500 feet of curb and gutter per project. Generally, curbs and gutters that deviate 2” or more from original grade will be scheduled for removal and replacement. Inspection frequencies and levels will be completed in conjunction with the Sidewalk Inspection Program on a 6 year rotation identified by zone.

Sidewalk: The adjacent property owners are responsible for maintaining the sidewalk and driveway approaches in a safe and good condition per City Code. Public sidewalks are visually inspected in conjunction with the Sidewalk Inspection Program on a 6 year rotation identified by zone for alignment and grade deviations of more ½”.

UNIMPROVED GRAVEL STREETS

Gravel Streets: Gravel streets are considered to provide only a temporary travel surface until a permanent improvement is made to City standards. Maintenance of this temporary surface is the responsibility of abutting property owners.

Dust Control: Dust control treatments of gravel streets will not be done by the City. Abutting property owners who wish to apply dust suppressant material to a street for the purpose of controlling dust must notify the Streets Supervisor.

Vegetation: The Code Compliance Division Inspector will notify abutting property owners if vegetation encroachment is such that it is causing interference problems for traffic or is in violation of the City Code. If property owners do not remove such vegetation the violation may be enforced.

Roadside Swales: Cleaning of roadside swales will be scheduled by the City when required for flood control and as equipment and personnel are available. Swales along gravel roads are low priority.

Culverts: All maintenance of driveway culverts is the responsibility of the property owner. See storm sewer maintenance policy for additional details.

Shoulders: All maintenance of parking areas and right of way outside of the graded surface for vehicles or the swale is the responsibility of the abutting property owner.

Any maintenance on dedicated right of ways that are undeveloped are the responsibility of the abutting property owners. Examples would include lack of vegetation control, drainage maintenance, and debris dumping.

STORMWATER DIVISION

Background and Purpose

The City of Lake Worth (City) is a coastal community located in Palm Beach County, Florida with approximately 37,000 residents. The City is 7 square miles and is generally bounded by the Lake Worth Lagoon to the east, C-51 Canal to the north, C-16 Canal and Lake Osborne to the west, and City of Lantana to the south. The Lake Worth Lagoon is a valuable aquatic resource and the City continues to protect and enhance its water quality as part of its stormwater program. The area has relatively low-lying topography that is intersected by Federal Highway 1 (US 1) and Interstate Highway 95. The City has a subtropical climate with high intensity rainfall, significant tidal influence, permeable soils along the sand ridge, low permeability soils along the low lying areas along the Lake Worth Lagoon, large amounts of impervious area, few local and regional stormwater Best Management Practices (BMPs), and limited available surface storage. These factors contribute to historical and potential future rainfall and tidal flooding.

The City's stormwater management system consists of approximately 53 City-maintained outfalls served by swales, inlets, storm drains, culverts, exfiltration systems, channels, canals, and retention-detention storage systems. Of the City-maintained outfalls, 22 outfalls discharge to Lake Worth, 26 to Lake Osborne/C-16 Canal, and 5 to the C-51 Canal. Additionally, the City has a system of seawalls along the Lake Worth Lagoon in residential areas as well as within the City's Golf Course and parks to provide both flood and erosion protection. Flooding has occurred from a combination of rainfall and tidal influences on the City's stormwater management system.

The City is one of 41 municipalities and state entities that entered into an Interlocal Agreement with Palm Beach County authorizing Northern Palm Beach Water Control District (WCD) to be the lead permittee in submitting a National Pollutant Discharge Elimination System (NPDES) Municipal Separate Storm Sewer System (MS4) Phase 1 Permit Application in 2001.

As a result, the City obtained coverage for its stormwater management system under MS4 Permit No. FLD000018-003 issued by the Florida Department of Environmental Protection (FDEP). The NPDES MS4 Permit requires permitees to develop a Stormwater Management Program and the City developed one as part of the original permit.

This Stormwater Master Plan (SWMP) is intended to be a guide for improving the City's stormwater management system performance and to assist with regulatory compliance activities. The SWMP will provide a preliminary schedule of prioritized capital improvements necessary to allow the City's stormwater systems to meet increasing performance and regulatory demands and modernize existing systems while maintaining the high level of service expected in a modern urban environment in a cost-effective manner. The SWMP addresses both water quantity and water quality concerns within the City's stormwater management systems.

Program Goals and Objectives

On October 18, 2011 the City authorized CDM Smith to develop a City-wide Stormwater Master Plan in order to evaluate the study area and the City's primary stormwater management system (PSMS) along with associated outfalls to receiving waters (Lake Worth Lagoon, Lake Osborne, C-16 and C-51 systems). As part of evaluating the stormwater system, CDM Smith met with the City and established objectives, priorities and goals for the SWMP and for the CIP program such as flood control, aquifer recharge, stormwater harvesting, water conservation and improving water quality discharges to the City receiving waters as listed below:

- Water quality protection and improvement for discharges to the Lake Worth Lagoon, Lake Osborne, and canals consistent with state water quality standards and pending numeric nutrient criteria:
- Flood control and relief of nuisance problems;
- Aquifer recharge to protect and replenish potable groundwater supplies and to reduce salt water Intrusions;
- Harvesting and reuse of stormwater; and,
- Multi-benefit solutions for parks, road and green area restoration.

Based on these goals, performance standards were established in the SWMP for those goals that can be quantified (e.g., water quality standards, flood control levels of service). Specific objectives were defined for each goal so that measurable achievement can be identified as implementation progresses. Since the City is relatively built-out, the SWMP focuses on sustainable BMPs for existing land use conditions and redevelopment criteria.

Primary Stormwater Management System (PSMS)

The City of Lake Worth stormwater management system is comprised of 53 primary outfalls, over 115,000 feet of pipes, 1 lake (Lake Osborne), and 7 stormwater ponds. For this SWMP, the PSMS was defined to focus on primary components of the stormwater system (e.g., lakes, ponds, canals, major ditches, and pipes greater than 15 inches in diameter). Some of this system has been in existence for over 70 years. Some of the older parts of the PSMS facilities are in need of upgrade and repair. During intense storm events, flooding occurs in low-lying areas due to excess runoff, tidal influences and elevated groundwater levels.

As development has expanded within the City and green areas have transitioned into developed land, increased impervious area has produced more runoff. Per the City's Comprehensive Plan, development shall be regulated to ensure adequate on-site containment of stormwater based on the three-year, one-hour design storm event. As part of the City's site plan review process, incoming development must take in to account the effect that the project will have on the existing stormwater system. Based on the ratio of pervious to impervious surface area and the ability to maintain stormwater on site, improvement of the surrounding system in the City right-of-way may be necessary as determined by the Site Plan Review Committee.

Intergovernmental Framework and Regulations

The City's stormwater management system is regulated by federal, state, and local agencies. Therefore, any modifications or improvements to the City's stormwater system need to be developed following the applicable regulatory framework and regulations.

Federal

The following is a summary of the federal regulations/agencies that influence the management of the City's stormwater management system.

United States Environmental Protection Agency (US EPA)

The US EPA was mandated by Congress through Section 405 of the Water Quality Act of 1987 to promulgate a National Pollutant Discharge Elimination System (NPDES) permitting program for municipal stormwater discharge. As discussed above, Lake Worth is a co-permittee with Northern Palm Beach WCD that coordinates on this program for compliance. The City's reviewed permit was issued in March 2, 2011 with an expiration date of March 1, 2016. Permit requirements have been taken into consideration for the water quality approach in this SWMP.

In 2000, the US EPA delegated the NPDES permitting authority to the State of Florida Department of Environmental Protection (FDEP). The US EPA is currently updating the MS4 stormwater regulations and the new rule is expected to contain additional requirements for BMPs and documentation on their performance. These potential future needs are considered in the SWMP recommendations, including pending numeric nutrient criteria for discharges which are discussed in further detail in this section.

Federal Emergency Management Agency (FEMA)

FEMA regulates riverine (stormwater) and coastal (tidal) floodplains and floodways under the National Flood Insurance Program (NFIP). CDM Smith used the Flood Insurance Study (FIS) and Flood Insurance Rate Maps (FIRMs) reports and databases developed by FEMA for comparison with model results for flood risks and are presented in Section 3.

United States Army Corps of Engineers (USACE)

The United States Army Corps of Engineers (USACE) regulates dredge and fill and is the primary federal agency that develops guidance parameters for civil infrastructure design considerations. The USACE has developed sea level rise guidance for sources of possible changes for the next 50 years. These projects were considered in the CIP as discussed above.

State

The following is a summary of the state agencies that regulate stormwater management.

South Florida Water Management District (SFWMD)

The SFWMD has responsibilities for stormwater management under Florida Administrative Code (F.A.C.) Chapters 40E-4, 40E-40 and 40E-400 through issuance of an Environmental Resource Permit (ERP). SFWMD also regulates the surface water under F.A.C. Chapters 40E-40 and 40E-41. In addition, its responsibilities include regulation of dredge and fill and consumptive use activities. Since SFWMD has permitting authority of new and modified stormwater management systems, their criteria and standards will be used as guidelines for conceptual planning of both water quality and quantity improvements. These guidelines are documented in the SFWMD ERP Information Manual Volume IV (2010).

The SFWMD operates the C-51 and C-16 Canal systems via control structure S-155 and their data were used for analysis of these systems.

Florida Department of Environmental Protection (FDEP)

FDEP regulates environmental programs in the State of Florida and has been delegated NPDES MS4 permit authority, as described previously. The stormwater element of the NPDES program is mandated by the Clean Water Act (CWA) Section 402(p). Authorized by Section 403.0885, Florida Statutes (F.S.), the Department's federally approved NPDES stormwater program is set out in various provisions within Chapters 62-4, 62-620, 62-621 and 62-624 of the Florida Administrative Code (F.A.C.). Chapter 62-624, F.A.C. specifically addresses MS4 permit requirements.

The City is one of the 41 entities authorized for stormwater discharge under the comprehensive Palm Beach County NPDES MS4 permit (Permit Number FLS000018-003). The City is authorized to discharge stormwater to waters of the state in accordance with the approved SWMP, effluent limitations, monitoring requirements, and other provisions as set forth in this permit. The City has been actively implementing various required programs and activities to maintain compliance with the permit. These efforts are documented in annual reports submitted by the City to the FDEP.

The FDEP also regulates underground injection control permits for wells under the Underground System Injection Control (UIC) Program (gravity recharge wells and pumped injection wells).

Florida Department of Transportation (FDOT)

FDOT regulates and prescribe conditions for the transfer of stormwater to their drainage system as stated in Chapter 14-86 Drainage Connections, Florida Statutes (F.S.). In Lake Worth, the FDOT owns and maintains several roadways, including Dixie and Federal Highways, Lucerne and Lake Avenues and Lake Worth Road. During the past several years, the FDOT has done extensive improvements in these roads. Coordination with FDOT may be necessary due to the City's and FDOT's stormwater systems being interconnected at certain locations.

Local

The following is a summary of the local agencies that regulate the City's stormwater management system.

Lake Worth Drainage District (LWDD)

The LWDD was established in 1915 by the State of Florida as a Special Taxing District with the purpose of providing water control and water supply for settlement and agriculture. Authority is derived from Florida Statutes Chapter 298 and Chapter 09-258 and their amendments. The LWDD provides services such as canal construction, maintenance and operation. It monitors and controls a complex system of canals and associated rights-of-way within its jurisdictional area that include portions of the City of Lake Worth for a total area of about 200 square miles. Development projects and activities that affect the rights-of-way of LWDD require review and permitting by LWDD. Water discharged into the LWDD canal system must meet water quality standards in accordance with the laws of the State of Florida.

Palm Beach County

The Palm Beach County Engineering and Public Works Department is responsible for the review and issuance of permits for construction activities that impact or discharge to its stormwater drainage systems within Palm Beach County rights-of-way.

City of Lake Worth

The City's Stormwater Management System is governed by Chapter 62-25 F.A.C. and the rules and regulations of the South Florida Water Management District (SFWMD). The Comprehensive Plan adopted in October 2009 and amended in August 2012, establishes goals, objectives and policies for the City's infrastructure and specifically for stormwater management. The Building Division provides plan and specification review for any non-residential or residential use that applies for a building permit, site plan approval or subdivision review in accordance with the Florida Building Code. Drainage plans review is provided by the Public Services Department. The City also requires that the applicable SFWMD Environmental Resource Permit (ERP) that regulates stormwater management and drainage systems be obtained prior to City approval for site development and issuance of the construction permit.

FDEP TMDL Program

As required by Section 303 (d) of the Federal Clean Water Act, the state of Florida must develop total maximum daily loads (TMDL) for impaired waters (i.e., those that do not meet their designated uses). The TMDL is defined as the maximum allowable loads for all pollutant sources to impaired waters and also identifies the load reductions needed to achieve the receiving water's designated use(s). The FDEP leads this effort working with local stakeholders including water management districts, cities, counties, and private interests. But the EPA can issue TMDLs for water bodies if the EPA believes the water body identification (WBID) is impaired and FDEP does not.

The TMDL program works to develop a scientifically-sound database of information and calibrated-validated hydrology, hydraulic, and water quality models to identify the TMDL, build on pollutant load reduction goals (PLRGs), support the load allocation and reduction process, and establish the foundation for evaluations of BMPs to improve water quality. Enforcement is through NPDES permitting for domestic wastewater, industrial wastewater and MS4s.

The TMDL program could ultimately lead to a basin management action plan (BMAP) that would require the City to complete retrofit projects to reduce pollutant loads to waters of the state.

US EPA/FDEP Numeric Nutrient Rules

In 2011, a number of actions changed the Numeric Nutrient Criteria (NNC) playfield. First, the state of Florida adopted a version of the NNC for streams, lakes, springs and some estuaries. The rules were adopted by Environmental Regulatory Commission in December 2011 and sustained by the Florida Legislature in February

2012. Also in February 2012, the US District Court invalidated the EPA stream criteria. A lawsuit by environmental interest was filed to invalidate the Florida NNC and in May, 2012, the administrative law judge sustained the Florida NNC. As of today, EPA has postponed the effective date of their version of the NNC in order to review the state's proposal and to allow more time to define estuarine NNC.

For streams, the actual numeric criteria listed in the state version of the NNC are the same as those listed in EPA's. The difference is that with EPA's version, violation of any of the NNC defines impairment (each parameter is independently applied) while for Florida's version, two other factors must be in place before a waterbody is considered impaired: the ambient biology must be imbalanced (i.e., impaired) and there must be a correlation between the nutrient concentrations in the waterbody and the imbalanced biology. For South Florida canals, as with the EPA version, Florida's version of the NNC does not define nutrient criteria since there is little scientific confirmation on the exact nature of a "balanced" biology in a man-made canal.

SFWMD and FDEP Unified Statewide Stormwater Rule

FDEP and the water management districts have been developing a state-wide stormwater rule to control nutrient loadings from stormwater discharges in order to better protect water quality. These supplemental criteria (if adopted) would give credit for additional non-traditional BMPs and encourage stormwater reuse while controlling the average annual volume of discharge and nutrients to historical (pre-development) levels. FDEP has been working to extend these criteria to a unified statewide rule that considers variations in hydrology and physical characteristics across Florida. If adopted as it has been drafted today, this rule would exempt retrofits for stormwater systems that provide some load reduction, such as stormwater master plan projects with water quality BMP features. The rule was placed on hold and the ongoing Environmental Resource Permit (ERP) streamlining legislative efforts are considering some of the standards and criteria in the draft rule.

Existing System Evaluation

Level of Service (LOS) Evaluation

The primary purposes of Level of Service (LOS) criteria are to protect public safety and property. Program goals are to maintain passable roads for emergency and evacuation traffic, and control flood stages below roads, property, homes, and buildings as practicable. A LOS also indicates the level of treatment of a stormwater management system or the use of BMPs to reduce pollutant loads to the receiving water system.

The LOS criteria used in this study identify and define potential problem areas based on the stormwater model simulations performed. The criteria are then used to evaluate the effectiveness of improvements that are incorporated in the model simulating alternative solutions. LOS decisions will directly affect the extents and cost of proposed improvement alternatives.

Water Quantity

The LOS for the stormwater management system establishes the performance standard. It can vary for new development versus retrofit conditions where various physical and cost constraints can create a situation of diminishing returns.

The infrastructure element of the amended August 7, 2012 City of Lake Worth Comprehensive Plan established a stormwater quantity LOS standard based on the design storm frequency for a 3-year, 1-hour storm duration as per the FDOT rainfall intensity curves.

During the development of this SWMP and prior to August 2012, the selection for the stormwater quantity LOS was based on a typical industry standard for a City similar to Lake Worth which is defined by maximum level of flooding up to 6-inches above the road gutter elevation during the 5-year, 24-hour storm event.

In the instance that no curb and gutter exists within a City neighborhood, the established maximum level of flooding up to the crown of the road during the 5-year, 24-hour storm event remains as the standard. Therefore, this standard LOS was used as part of the evaluation of the SWMP model simulations.

The 5-year, 24-hour event was simulated as the critical event to evaluate stormwater system performance in both existing and future conditions. A comparison between the 5-year, 24-hour and the 3-year, 1-hour storm event was performed to verify the selection of the 5-year, 24-hour storm event for LOS determination was comparable with the City's Comprehensive Plan. Since they were comparable, all drainage projects in the City must meet the 3-year 1-hour requirements set forth in the Comprehensive Plan. The LOS was also evaluated for the 10-, 25-, and 100-year 72-hour design storms. LOS evaluations were made for road gutter-crown and building elevations where data were available.

The following figure shows a representation of the standard LOS with a maximum acceptable level of flooding of 6-inches above the road gutter.

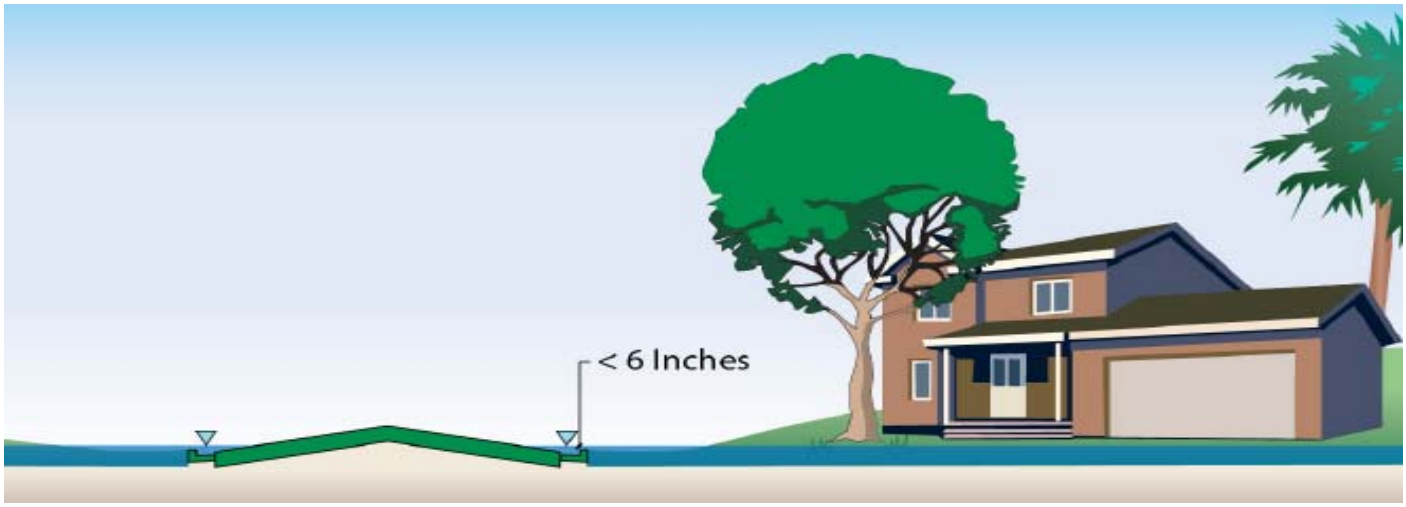

Water Quality

The water quality LOS establishes the level of treatment that a stormwater system provides prior to discharging to a receiving water body. At a minimum, the LOS is expected to achieve water quality standards. Reducing pollutant loads will help towards meeting the LOS over time.

Operation and Maintenance (O&M) Evaluation

The City's O&M activities related to the stormwater infrastructure are structured to be in compliance with the requirements set forth in the NPDES joint permit with Palm Beach County.

The City's stormwater infrastructure maintenance program provides repair, replacement and maintenance for infrastructure within the street right-of-way. Current maintenance activities include the following: litter removal from inlets and catch basins following heavy storms, emergency repairs to failing pipe system infrastructure, street sweeping, cleaning outfalls on an as-needed basis, roadside ditch repair on an as-needed basis, and small pipe replacement projects.

The goal of the City's stormwater O&M program is to maintain the structural integrity of the system so that the system functions within the LOS for which it was designed or is designated. In order to achieve this goal, periodic inspections, regular cleaning and necessary improvements are required.

The City's O&M program is an effective program with a goal of keeping the City downtown rights-of-way free of garbage, trash, litter and all other waste material which may contribute pollutants to the environment.

The City's stormwater system and any stormwater structural control is operated in a manner to reduce the discharge of pollutants to the maximum extent practicable. The following paragraphs discuss the City's stormwater components and assess O&M activities performed in compliance with regulatory mandates. The assessment of the O&M program is discussed in order of the structural control items listed in the City's NDPES permit.

Structural Controls, Stormwater Collection System Operations

Stormwater Treatment Pond (Dry Retention)

Stormwater treatment ponds are inspected by the Public Services Department, Street/Stormwater Division and the grounds are maintained (mowing) by the Grounds Maintenance staff. Each month one stormwater treatment pond is inspected and maintained.

Channel

The City has maintenance responsibility for the Fitch Ditch, which is an approximate 4,600 feet long channel that is inspected twice a year by staff. Observed maintenance needs are addressed by the Public Services Department - Streets/Stormwater and Grounds Maintenance Divisions.

Pollution Control Boxes

Pollution control boxes such as baffle boxes and catch basin inserts are inspected and maintained by the Public Services Department - Streets/Stormwater Division. Inspections and cleaning are performed on a timed interval. Additional maintenance activities are performed as needed. Cleaning baffle boxes, catch basin inserts, and other pollution control boxes reduces the amount of debris/trash that can obstruct flows and be conveyed to downstream receiving waters.

Major Stormwater Outfalls

Stormwater outfalls are inspected on an as needed basis by the Public Services Department - Streets/Stormwater Division. The inspection and maintenance of stormwater inlets and outfalls is intended to verify that the outfall is in good working condition. Inspection activities include verifying that pipes are free from obstructions and that undermining around pipes and channel bank erosion has not occurred. Corrective maintenance activities are performed when problems are observed at the outfall. Typical maintenance activities include removal and proper disposal of debris and/or sediment, and repair of structural damage and inspection to verify that discharge does not cause erosion and sedimentation.

Swales/Ditches

Grass swales and landscaped medians play an important role in stormwater collection, treatment, infiltration, and discharge. Consistent mowing of such features prohibits woody growth and controls weeds. Mowing also promotes stormwater retention and efficient percolation. The Public Services Department - Streets/Stormwater and Grounds Maintenance Divisions are assigned the responsibility of maintaining swales and medians within public roadways and parking lots. Individual business owners and residents are required to maintain their facilities.

Inlets, Catch Basins, Grates

The Public Services Department - Streets/Stormwater Division is responsible for maintenance and inspection of the stormwater inlets, catch basins, and grates on a timed schedule. The City utilizes mechanical (vactor-flushing truck and vacuum sweeper trucks) and manual methods. These methods include cleaning the external grates to allow stormwater to enter the system, and removing sand, silt, and debris from manholes and sedimentation chamber of catch basins. Trash within structures can create blockage and cause improper drainage. Such blockages and/or structural deficiencies allow standing water in the catch basins and inability for water to flow creating the potential for system overflow and/or flooding in surrounding areas.

CITY OF LAKE WORTH STORMWATER MAP

Florida Statute 119 "Public Records" provides broad access to records maintained by the City, including mapping records. However specific attention of all GIS users is directed to F.S. 119.071 "General exemptions from inspection or copying of public records" that exempts specific information that is maintained within the City's GIS. Specifically any information concerning the floor plans of buildings, the location and atributes of Utilities infrastructure, and security facilities are exempt from the sunshine. All City personnel shall take specific care in the release of GIS materials to ensure only authorized release of this exempted material is done. GIS layer developers who create layers with exempt data shall include the appropriate references to F.S. 119.071(3), and the restriction to the access to the information within the metadata file of the layer.

Street Sweeping

Public roads are maintained by the City in a manner to reduce to the discharge of pollutants. Street sweeping is done by the Public Services Department - Streets/Stormwater Division. This activity cleans intake structures, prevents debris deposition within pipe networks, and contributes to the aesthetics of the City. The street sweeping material is transferred to dump trucks and then transported to the landfill for disposal. Approximately 7,200 lane miles are swept annually, the equivalent of sweeping the entire City a total of 65 times per year. As per revisions to the NPDES MS4 permit, the City now calculates the nutrient reductions associated with street sweeping activities. The reductions can be calculated using the results of the ongoing Florida Stormwater Association MS4 Load Reduction Tool. The tool requires input values for total volume of collected solids (cubic-feet) and weights of both dry and wet solids (lbs). The City may have to coordinate with Palm Beach County (lead permittee) for future sampling regarding moisture content and bulk density.

Water Quantity Existing Condition Evaluation

The water quantity modeling simulation for current conditions provides an overview of potential areas susceptible to flooding issues. As described previously, the depth of flooding along the road curb identified for each area (model node) determined whether the LOS was met. The areas that do not meet the LOS will be discussed in the Proposed Improvements Evaluation.

Historical Flooding Locations

The City provided a list of areas with reported flooding or ponding during rainfall events by local residents and businesses, but description or depth of flooding was not available. In general, the areas reported include stormwater management facilities west of the railroad right-of-way and along the shoreline of Lake Worth Lagoon. However, existing flooding conditions are also apparent in other areas of the City as well.

Best Management Practices

The following are structural Best Management Practices for retrofitting the identified problem areas to meet established LOS and improve water quality in the City. These BMPs integrate green stormwater infrastructure principles with stormwater management, treatment, and recharge. Also, the BMPs selected have the capacity to capture, store, infiltrate, and treat stormwater runoff within the areas where the runoff is generated. This approach minimizes water quantity and quality impacts to the receiving water- bodies downstream and improves the efficiency of the stormwater system.

Exfiltration Trench

The exfiltration trench BMP consists of installing a perforated pipe laid in a bed of filter media, such as FDOT # 57 stone wrapped in filter fabric, below grade and with minimal loss of valuable real estate. The applicability of this technology and its performance are related to the rate of percolation of the trench's sides and bottom, the suitability of local soils as well as depth to groundwater. This BMP promotes infiltration and groundwater recharge. In order to reduce required maintenance and extend its useful life, pre-treatment of stormwater using buffer strips, swales or pollution control boxes is important for removing coarse sediment that can cause clogging and sedimentation of the exfiltration trench. Water quality concerns of dissolved pollutants (nitrates and phosphorus) are also captured by exfiltration trenches.

Soil type and groundwater level considerations are very important when implementing exfiltration trenches. Areas of well drained soils with low groundwater levels provide the best opportunity for implementation. Due to the relatively permeable soils throughout the City, exfiltration trenches are widely recommended in this stormwater master plan. They are considered a green stormwater infrastructure as they provide flood control, water quality, and aquifer recharge benefits and are encouraged by the SFWMD especially in retrofit applications for areas with sandy soils as in these specific areas of Lake Worth.

It is recommended that exfiltration trenches:

- Be constructed in locations where the trench bottom is at least 1 foot above the wet season water table;
- Have cleanouts every 100 feet (50 feet reach from either side);
- Install nutrient separating baffle boxes (NSBBs) in conjunction with the exfiltration trench; and
- Be constructed with a filter fabric liner around the perforated pipe as well as around the rock trench to provide enhanced capture removal of sand and debris in the pipe system for cleaning with standard vacuum-truck type equipment. Maintenance is key in the continued performance of these systems and activities include routine vacuuming of accumulated sediments and debris and less often high pressure cleaning and backwash of the perforated pipe to reduce clogging.

<u>Pollution Control Box (Baffle Box)</u>

Pollution control boxes such as baffle boxes are concrete or plastic (HDPE) structures typically containing a series of chambers separated by baffles for settling sediments. These BMPs reduce the amount of debris and sediments either entering the stormwater conveyance system or discharging to receiving waterbodies. The baffle boxes may also contain trash screens or skimmers for capturing floatable materials.

More advanced baffle boxes (nutrient separators) can provide additional measures to remove nutrients from the stormwater runoff. Baffle boxes can also be used as stormwater pretreatment prior to an exfiltration trench. These types of units are proposed in conjunction with the exfiltration trench described above. Maintenance activities include routine vacuuming of accumulated sediments and debris. As with all BMPs, O&M is critical to the success of their performance.

Underground Storage Detention System

The underground storage detention system can be a cost-effective detention system used to control stormwater by providing storage with minimal loss of valuable real estate. These storage systems are typically installed under parking lots, parks, and streets. The underground storage detention system stores and releases the stormwater runoff over time. The storage system may be partially perforated to allow for exfiltration into the groundwater where the depth to groundwater is appreciable. At Bryant Park there was available space for the installation of the underground storage system. However, due to the high groundwater table, two recharge wells were proposed rather than exfiltration. The recharge wells will provide aquifer recharge at the land interface with the Lake Worth Lagoon.

Recharge Well

In the State of Florida, stormwater wells are currently regulated under FDEP's Underground Injection Control Program and the applicable rules are included in Chapter 62-528, F.A.C. Stormwater wells are classified as Class V wells under Group 6. These are defined as those wells used to drain surface fluid, primarily stormwater runoff or for lake level control, into a subsurface formation. Rule 65-528.605 requires that new Class V wells be constructed so that their intended use does not violate the water quality standards of Chapter 62-520, F.A.C. (Ground Water Classes, Standards, and Exemptions) at the point of discharge. Wells considered for this SWMP would discharge treated stormwater into an aquifer zone that is greater than 10,000 mg/L total dissolved solids (TDS). Stormwater pre-treatment can be provided by exfiltration, swales, retention, wet detention lakes, vortex separators, and/or baffles/screens in the well junction box.

It is recommended that a test well be constructed for potential recharge well locations to confirm that the well meets the FDEP UIC requirements and will hydraulically function as required. The well test should confirm the wet season potentiometric elevation and that the aquifer zone is greater than 10,000 mg/L total dissolved solids. Wells should be cased and screened and provide at least two feet of hydraulic head for salinity plus and one to two additional feet of head for the desired minimum flow rate.

As described above, two recharge wells are proposed as part of the two underground storage detention systems proposed for Bryant Park. The purpose of the recharge wells is to provide a direct recharge to the deep surficial aquifer. This recharge reduces the potential for salt water intrusion by the natural movement of the added freshwater towards the lagoon. It also prevents typical stormwater pollutants from discharging directly to a natural waterbody and the water is instead filtered within the underground soil layers.

Pervious Grass Pavement

In green areas where vehicular traffic is anticipated (parking lots, driveways, and green areas), the installation of pervious grass pavement is important to maintain rainfall infiltration that otherwise would be compromised due to traffic that damages the grass cover and compact the soils underneath impeding infiltration. As proposed in this master plan the pervious grass pavement improves the infiltration rate of the rainwater into the ground and provides a pervious, high strength surface for vehicular load.

Wet Detention Pond

The expansion and improvement of the golf course stormwater pond provides stormwater treatment for additional tributary area. The proposed expansion of the pond is within the limits as discussed by the Golf Course administration and City staff. The proposed improvements to the pond increase the detention time and improves the water quality discharged to the Lake Worth Lagoon.

Conveyance Pipes and Outfalls

Improvement of conveyance pipes and outfalls are proposed in specific areas in conjunction to a water quality improvement benefit (NSBB) to reduce the pollutant discharge. The combined improvements will have a net reduction in pollutant loading. It is recommended to consider installation of backflow preventers (check valves) to the stormwater pipes that outfall to the C-16 and C-51 Canals and to the Lake Worth Lagoon to prevent tidal inflow to the stormwater system if applicable.

Excerpt from City Municipal Code, Part II - Code of Ordinances, Chapter 18 - Utilities

ARTICLE VII. STORMWATER UTILITY

Division 1. General.

Sec. 18-70. Authority.

The city is authorized by the Florida Constitution and the provisions of F.S. Ch. 166 § 403.0893, Florida Statutes, to construct, reconstruct, improve, and extend stormwater utility system and to issue revenue bonds and other debts if needed to finance in whole or part the cost of such system and to establish just and equitable rates, fees, and charges for the services and facilities provided by the system.

Maintenance of the stormwater management system includes but is not limited to inlets, conduits, manholes, channels, ditches, drainage easements, retention and detention basins, infiltration facilities, swales, and other components as well as natural waterways. All elements of these storm and surface water management systems, which provide for the collection, storage, treatment, and conveyance of stormwater, are of benefit and provide services to all property within the city.

(Ord. No. 2015-03, § 2, 2-17-15)

Sec. 18-71. - Findings and determinations.

It is hereby found, determined, and declared as follows:

(1) Those elements of the city stormwater management system which provide for the collection and disposal of stormwater and regulation of groundwater are of benefit and provide services to all property within the incorporated city limits, including property not presently served by the storm elements of the system.

(2) The costs of operating and maintaining the city stormwater management system and financing necessary repairs, replacement, improvements, and extension thereof should, to the extent practicable, be allocated in relationship to the benefits enjoyed and services received therefrom.

(Ord. No. 2015-03, § 2, 2-17-15)

Sec. 18-72. - Definitions.

For the purpose of this article, the following definitions shall apply; words used in singular shall include the plural, and the plural, the singular; words used in the present tense shall include the future tense. The word "shall" is mandatory and not discretionary. The word "may" is permissive. Words not defined herein shall be construed to have the meaning given by common and ordinary use as defined in the latest edition of Webster's Dictionary.

Authorized official means any employee or agent of the city authorized by the director to administer or enforce the provisions of this article.

Availability charge means a charge to a developer or individual resident to recover the debt service and extension and replacement costs paid for a stormwater management system facility that had been previously constructed, but which serves such developer or individual resident.

Best management practices (BMPs) means management techniques recognized to best minimize pollutant and sediment loadings from stormwater runoff.

Bonds means revenue bonds, notes, loans or any other debt obligations issued or incurred to finance the costs of construction.

Costs of construction means costs reasonably incurred in connection with providing capital improvements to the system or any portion thereof, including but not limited to the costs of (1) acquisition of all property, real or personal, and all interests in connection therewith, including all rights-of-way and easements therefor (2) physical construction, installation and testing, including the costs of labor, services, materials, supplies and utility services used in connection therewith, (3) architectural, engineering, legal and other professional services, (4) insurance premiums taken out and maintained during construction, to the extent not paid for by a contractor for construction and installation, (5) any taxes or other charges which become due during construction, (6) expenses incurred by the city or on its behalf with its approval in seeking to enforce any remedy against any contractor or sub-contractor in respect of any default under a contract relating to construction, (7) principal of and interest on any bonds, and (8) miscellaneous expenses incidental thereto.

Debt service means, with respect to any particular fiscal year and any particular series of bonds, an amount equal to the sum of (i) all interest payable on such bonds during such fiscal year, plus (ii) any principal installments of such bonds during such fiscal year.

Detention means the collection and temporary storage of stormwater in such a manner as to provide treatment through physical, chemical or biological processes with subsequent gradual release of the stormwater.

Developed property means real property which has been altered from "natural" state by the addition of any improvements such as a building, structure, or impervious surface. For new construction, property shall be considered developed pursuant to this article: (a) upon issuance of a certificate of occupancy, or upon completion of construction or final inspection if no such certificate is issued; or (b) if construction is at least fifty (50) percent complete and construction is halted for a period of three (3) months.

Director means the director of public services or his or her designee.

Dwelling unit means a single unit or apartment providing complete, independent living facilities for one (1) or more persons including permanent provisions for living, sleeping, eating, cooking and sanitation.

Equivalent residential unit or ERU means the average impervious area of residential developed property per dwelling unit located within the city and as established by resolution as provided herein.

ERU rate means a utility fee charged on each ERU as established by resolution as provided herein.

Extension and replacement means costs of extensions, additions and capital improvements to, or the renewal and replacement of capital assets of, or purchasing and installing new equipment for, the system, or land acquisition for the system and any related costs thereto, or paying extraordinary maintenance and repair, including the costs of construction, or any other expenses which are not costs of operation and maintenance or debt service.

Fee-in-lieu-of means a charge to a developer or individual resident to recover (1) the costs of construction and debt service on a new stormwater management system facility which serves such developer or individual resident, or (2) the extension and replacement costs necessitated by development undertaken by such developer or individual resident.

Fiscal year means a twelve-month period commencing on the first day of October of any year, or such other twelve-month period adopted as the fiscal year of the utility.

Impervious area means metal roofed and paved areas, including, but not limited to, areas covered by roofs, roof extensions, patios, porches, driveways, sidewalks, parking areas and athletic courts.

Nonresidential developed property means developed property that is classified by the property appraiser as land use types 10 through 99 using the Florida Department of Revenue Land Use Codes, as amended or supplemented.

Operating budget means the annual utility operating budget adopted by the city for the succeeding fiscal year.

Operations and maintenance means the current expenses, paid or accrued, of operation, maintenance and current repair of the system, as calculated in accordance with sound accounting practice, and includes, without limiting the generality of the foregoing, insurance premiums, administrative expenses, labor, executive compensation, the cost of materials and supplies used for current operations, and charges for the accumulation of appropriate reserves for current expenses not annually incurred, but which are such as may reasonably be expected to be incurred in accordance with sound accounting practice.

Property appraiser means the office of the county property appraiser.

Residential developed property means developed property that is classified by the property appraiser as land use types 00 through 09 using the Florida Department of Revenue Land Use Codes, as amended or supplemented.

Retention means the prevention of stormwater runoff from direct discharge into receiving waters by utilizing discharge systems such as percolation, exfiltration, and evaporation processes.

Revenues means all rates, fees, assessments, rentals or other charges or other income received by the utility, in connection with the management and operation of the system, including amounts received from the investment or deposit of moneys in any fund or account and any amounts contributed by the city, all as calculated in accordance with sound accounting practice.

Site of industrial activity or industrial site means any area or facility used for manufacturing, processing or raw materials storage, as defined under 40 CFR section 122.26(a)(14) of the U.S. Environmental Protection Agency, as amended.

Stormwater means any stormwater runoff, surface runoff and/or drainage.

Stormwater management system or system means the existing stormwater management system of the city and all improvements thereto used for collecting, storing, and transporting stormwater which by this article is constituted as the property and responsibility of the utility, to be operated as an enterprise fund to, among other things, conserve water, control discharges necessitated by rainfall events, incorporate methods to collect, convey, store, absorb, inhibit, treat, use or reuse water to prevent or reduce flooding, over-drainage, environmental degradation and water pollution or otherwise affect the quality and quantity of discharge from such system.

Stormwater management utility or utility means the enterprise fund utility created by this article to operate, maintain and improve the system.

Undisturbed parcel means a parcel which has not been altered from its natural state by dredging, filling, removal of trees and vegetation or other activities which have disturbed or altered the topography or soils on the property.

Utility fee means a utility fee authorized by Florida law and this article which is established to pay operations and maintenance, extension and replacement and debt service.

(Ord. No. 2015-03, § 2, 2-17-15)

Sec. 18-73. - Establishment of stormwater management utility.

(a) The stormwater management utility is hereby established to provide for the general welfare of the city and its residents.

(b) The director shall be the chief staff member of the utility.

(Ord. No. 2015-03, § 2, 2-17-15)

Sec. 18-74. - Operating budget.

The city shall adopt an operating budget not later than the first day of each fiscal year. The operating budget shall set forth for such fiscal year the estimated revenues and the estimated costs for operations and maintenance, extension and replacement and debt service.

(Ord. No. 2015-03, § 2, 2-17-15)

Sec. 18-75. - Required levels of rates for utility fees.

The city commission shall require that adequate revenues are generated to provide for a balanced operating budget by at least annually setting sufficient levels of utility fees.

(Ord. No. 2015-03, § 2, 2-17-15)

Sec. 18-76. - Imposition of utility fees.

The city commission hereby authorizes the imposition of utility fees on all property within the city.

(Ord. No. 2015-03, § 2, 2-17-15)

Sec. 18-77. - Rate schedule.

(a) Property classification. For purposes of assessing the utility fee, the following property classes will identify the customer base:

(1) Residential developed property;

(2) Nonresidential developed property;

(3) Undisturbed parcel;

(4) Undeveloped but disturbed property;

(5) Vacant unimproved property

(b) Computation of utility fee for residential developed property. The utility fee for residential developed property shall be the ERU rate multiplied by the number of individual dwelling units existing on the property.

(c) Computation of utility fee for nonresidential developed property. The utility fee for nonresidential developed property shall be the ERU rate multiplied by the numerical factor obtained by dividing the total impervious area for a nonresidential developed property by one (1) ERU. The minimum utility fee for any nonresidential developed property shall be equal to one (1) ERU rate.

(d) Computation of utility fee for undisturbed parcels. Undisturbed parcels shall be exempted from the utility fee.

(Ord. No. 2015-03, § 2, 2-17-15)

Sec. 18-78. - Billing.

The frequency of billing is to be established by the city based on an assessment of the most efficient, effective and equitable method of billing and collections available to the utility. The utility fee shall be billed at least annually by the city but no more than twelve (12) times in one (1) calendar year. The utility may pursue billing and collections of the utility fee through the non-ad valorem levy, collection, and enforcement method as provided for in F.S. Ch. 197, Florida Statutes, or as part of a consolidated statement with other city utilities, or any other manner authorized by law.

(Ord. No. 2015-03, § 2, 2-17-15)

Sec. 18-79. - Adjustment of fees.

(a) Requests for adjustment of the utility fee for nonresidential developed property shall be submitted to the director, who is hereby given the authority to develop and administer the procedures and standards for the adjustment of fees as established herein. All requests shall be judged on the basis of the amount of impervious area on the site. No credit shall be given for the installation of facilities required by city or county development codes or state stormwater rules. The following procedures shall apply to all adjustment requests of the utility fee:

(1) Any customer who has paid his or her utility fee and who believes his or her utility fee to be incorrect may, subject to the limitations set forth in this article, submit an adjustment request to the director.

(2) Adjustment requests shall be in writing and set forth, in detail, the grounds upon which relief is sought.

(3) Adjustment requests made during the first calendar year that the utility fee is imposed will be reviewed by the director within a two-month period from the date of filing of the adjustment request. Adjustments resulting from such request shall be retroactive to the beginning of billings, but retroactive adjustment shall not exceed one (1) year.

(4) The customer requesting the adjustment may be required, at his or her own cost, to provide supplemental information to the director, including, but not limited to, survey data approved by a registered professional land surveyor (R.P.L.S.) and engineering reports approved by a professional engineer (P.E.). Failure to provide such information may result in the denial of the adjustment request.

(5) Adjustments to the utility fee will be made upon the granting of the adjustment request, in writing, by the director. Denials of adjustment requests shall be made, in writing, by the director.

(b) Upon receipt of the written denial of an adjustment request, the customer who initially requested the adjustment may, within thirty (30) days of receipt of such denial, appeal to the city commission for review of the denial. Such appeal shall not be a de novo appeal but shall be based on the material initially submitted to the director.

(1) The commission shall complete its review within thirty (30) days of receipt of said request for review. The city commission's determination shall be in writing and set forth, in detail, the reason or reasons for its decision.

(2) In reviewing denials of adjustment requests, the city commission shall apply the standards and review criteria contained in this article.

(Ord. No. 2015-03, § 2, 2-17-15)

Sec. 18-80. - Capital contributions.

(a) Where the city has constructed or plans to construct stormwater facilities which are proposed to be used by a developer or owner in lieu of a facility usually required to be constructed by the developer or owner, the city may accept a capital contribution from the developer or owner and waive certain construction requirements.

(b) Procedures and standards developed by the city shall define appropriate means by which to optimize the developer's or owner's capital contributions in the construction or refunding of stormwater systems.

These capital contributions shall take the form of fee-in-lieu-of or availability charges. Each situation will be analyzed by the city and a specific written decision will be developed. The application of each is defined as follows:

(1) Fee-in-lieu-of is applied to a site specific negotiated procedure, wherein a development's stormwater contribution (quantity and quality) is assessed its share of the capital needs of the facilities required to serve the development in question. This capital contribution would be used for the construction and refunding of city-owned stormwater facilities. The process does not apply when the stormwater facilities are privately held. Each application is evaluated against the city's master plan, or where the master plan is incomplete, against the cumulative impacts of the development.

(2) Availability charge is administered on a site specific basis identical to the fee-in-lieu-of procedure noted above. The only difference is that the capital investment advanced by the city in implementing a stormwater facility is now recovered through an availability charge. The capital charge is determined on a pro rata share of the capacity used by the new development as measured by the cumulative impact of the development upon all impacted facilities applied to the present worth of the original capital expenditure.

(Ord. No. 2015-03, § 2, 2-17-15)

Sec. 18-81. - Program responsibility.

It shall be the duty of the department of public services to administer the stormwater management utility. The department shall keep an accurate record of all persons using the services and facilities of said stormwater management system of the city and to make changes in accordance with the rates and changes established in this article.

(Ord. No. 2015-03, § 2, 2-17-15)

Sec. 18-82. - Stormwater management utility trust funds.

There shall be established a stormwater management utility trust fund for the deposit of all fees and charges collected by the stormwater utility. These funds shall be for the exclusive use of the city's stormwater management utility, including but not limited to the following:

(1) Administrative costs associated with the management of the stormwater management utility.

(2) Planning and engineering.

(3) Operation and maintenance of the system.

(4) Funding of pollution abatement devices constructed on stormwater systems discharging to the surface water of the city.

(5) Debt service financing.

(Ord. No. 2015-03, § 2, 2-17-15)

Sec. 18-83. - Stormwater utility policy and procedures manual.

The city commission will establish standard policies and procedures for the stormwater utility system by adopting a policy and procedures manual by resolution ("PPM-S" hereafter), which may include, but shall not be limited to, rules and regulations for various stormwater procedures, restrictions and BPMs; extension and connection policies; standard agreements and forms; and, minimum design and construction standards, which are consistent with and/or supplementary to this chapter and other applicable laws, codes and regulations. After adoption by the city commission, the PPM-S may be amended from time to time based upon recommendations by the public services director and approval by the city manager. The PPM-S shall have the same force and effect as a city ordinance.

Ord. No. 2015-03, § 2, 2-17-15)

DIVISION 2. - PROHIBITED DISCHARGE STANDARDS.

Sec. 18-84. - Discharge prohibited to stormwater system.

Any discharge into the stormwater system in violation of any federal, state, county, municipal or other law, rule, regulation or permit is prohibited and unlawful. It is also prohibited and unlawful for any person or facility to deposit any solids or discharge any liquid or gas that is not identified as acceptable stormwater or an identified allowable deposit or discharge directly or indirectly into the stormwater system. Such prohibited deposits and discharges are determined to be contaminants and or pollutants.

(a) Solids: Solids are defined as materials and particulates suspended in or capable of being deposited in and or transported by stormwater. The allowable limits of solids occurring in stormwater are as found in the city's most recent Stormwater National Pollutant Discharge Elimination System (NPDES) permit.

(b) Erosion control/construction sites: No property owner or other person shall allow through purpose or neglect, uncontrolled earthen exposure to deposit soil and related debris into any stormwater system.

(c) Litter/trash/garbage: No person or facility may deposit any litter, trash, or garbage in any manner that will result in the material being transported by or obstructing a stormwater system.

(d) Landscaping materials shall not be deposited in the storm system. All materials related to lawn and landscape maintenance capable of being transported by or obstructing a stormwater system must be controlled by the use of container and cover or compostable bag.

(e) No person or facility shall allow through purpose or neglect the discharge of any volatile or organic solids, liquids, or gas into a stormwater system (i.e., benzene, motor oil, anti-freeze, soaps, chlorine, grease, etc.).

(f) No sewage, industrial waste or other waste materials shall be discharged into the system. Animal feces must be disposed of in an appropriate manner.

(g) Cooling and/or condensing water may only be discharged to the stormwater system if a NPDES permit is obtained from the FDEP.

(Ord. No. 2015-03, § 2, 2-17-15)

Sec. 18-85. - Exemptions.

The following activities as defined in chapter 62-624.200, Florida Administrative Code, as amended, shall be exempt from the requirements of this division to the extent that these discharges meet state water quality standards:

(a) Water line flushing;

(b) Landscape irrigation;

(c) Rising ground waters;

(d) Uncontaminated ground water infiltration (as defined at 40 CFR 35.2005(20));

(e) Uncontaminated pumped ground water;

(f) Discharges from potable water sources;

(g) Irrigation water;

(h) Water from crawl space pumps;

(i) Footing drains;

(j) Lawn watering runoff;

(k) Water from individual residential car washing;

(l) Flows from riparian habitats and wetlands;

(m) Dechlorinated swimming pool discharges;

(n) Residual street wash water; and

(o) Discharges or flows from firefighting activities.

(Ord. No. 2015-03, § 2, 2-17-15)

Sec. 18-86. - NPDES permits.

(a) Any person who holds a NPDES permit which provides for an authorized connection and/or authorized discharge to the city's system or regulated waters, shall provide a copy of such permit to the department of public services no later than sixty (60) calendar days after the effective date of this chapter or thirty (30) calendar days after the issuance of said permits.

(b) Authorized discharges to the city's system shall be controlled so that they do not impair the operation of the city's system or contribute to the failure of the city's system to meet any applicable local, state, or federal law or regulation.

(c) Authorized discharges to regulated waters shall be controlled so that they do not adversely impact the quality or beneficial uses of those waters or result in violation of any applicable local, state, or federal law or regulation.

(Ord. No. 2015-03, § 2, 2-17-15)

Sec. 18-87. - Inspections.

(a) An authorized official shall be permitted to enter any building, structure, or property for the purpose of inspecting facilities or activities discharging or suspected of discharging to the system or regulated waters in order to enforce this division and to investigate potential violations of this division. All structures and processes that allow, contribute, or are exposed to stormwater discharges, and all records concerning them, shall be made accessible or available to authorized official for monitoring the quality of existing or potential stormwater discharges. Consent to such access shall be obtained from a person of suitable age and discretion therein or in control thereof. If such consent is refused, the city may seek enforcement pursuant to law.

(b) Any authorized official may install and maintain such devices as are necessary to conduct sampling or monitoring of discharges to the separate storm sewer system. During any inspections made to enforce the provisions of this division, or regulations or permits issued under this article, any authorized official may take any samples deemed necessary.

(c) The director may require any person engaging in any activity or owning any property, building or facility (including, but not limited to, a site of industrial activity) to undertake reasonable monitoring of any discharge(s) to the stormwater system and to furnish periodic reports.

(d) As part of the NPDES program, FDEP officials may also, at any given time, request permission to inspect any site or facility for NPDES compliance.

(e) The city may charge the applicable owner or person a reasonable fee for the cost of on-site inspection or re-inspection of stormwater, erosion, and sediment control plans associated BMPs if it is found applicant is in violation. The amount of the fee is established by resolution or ordinance.

(Ord. No. 2015-03, § 2, 2-17-15)

Sec. 18-88. - Discharges from commercial, industrial, or construction activities to the stormwater system or regulated waters.

(a) Stormwater from areas of any commercial, industrial, or construction activities shall be controlled, treated, and managed on-site using BMPs so as not to cause an illegal discharge to the city's system or regulated waters.

(b) All erosion, pollutant, and sediment controls required by any applicable local, state, or federal permit, including elements of a stormwater pollution prevention plan required under a NPDES permit and the city's land development regulations, shall be properly implemented, installed, operated, and maintained so as to effectively prevent polluted stormwater discharges.

(c) On-site disposal and temporary storage of construction-related materials and wastes at construction sites such as discarded building materials, concrete truck washout, chemicals, litter, and sanitary waste shall be controlled through effective implementation of BMPs so as to effectively prevent mixing with stormwater, which may result in polluted stormwater discharges.

(d) Authorized discharges to the city's system shall be controlled so that they do not impair the operation of the city's system or contribute to the failure of the city's system to meet any applicable local, state, or federal law or regulation.

(e) Authorized discharges to regulated waters shall be controlled so that they do not adversely impact the quality or beneficial uses of those waters or result in violation of any applicable local, state, or federal law or regulation.

(Ord. No. 2015-03, § 2, 2-17-15)

Sec. 18-89. - Control of pollutant contributions from interconnected systems and privately-owned stormwater facilities.

Stormwater flows from interconnected stormwater systems and privately-owned stormwater facilities shall be controlled so that they do not impair the operation of or contribute to the failure of the receiving stormwater system and privately-owned stormwater facilities to meet any applicable local, state, or federal law or regulation. Owners of an interconnected stormwater system and privately-owned stormwater facilities shall be responsible for the quality within their portion of the system and shall coordinate with the owners of the downstream (receiving) interconnected stormwater system.

(Ord. No. 2015-03, § 2, 2-17-15)

Sec. 18-90. - Reporting and correction of illegal connections and illegal discharges.

(a) Persons responsible for and/or currently operating known illegal connections or illegal discharges shall immediately initiate procedures to cease discharging and provide suitable containment facilities. Such procedures shall include a schedule for implementing proposed corrective measures that must be approved by the director or the director's designee.

(b) The construction, use, maintenance, or continued existence of illegal connections to the city's system is prohibited. This prohibition includes illegal connections made prior to the effective date of this section, regardless of whether the connection was permissible under law or practices applicable or prevailing at the time of connection. Immediately upon discovery, persons currently operating an illegal connection shall initiate procedures to cease discharging, remove said illegal connection, and proceed in cleanup of any discharge.

(c) As soon as a person responsible for and/or currently operating a commercial, industrial, or construction activity obtains information of a suspected and/or potential illegal discharge or illegal connection to the system or regulated waters from said activity, then all necessary actions shall be taken to locate the illegal discharge or illegal connection and, upon discovery, immediately initiate procedures to prevent and/or cease the illegal discharge and/or remove the illegal connection. Further, a schedule for implementing additional proposed corrective measures including authorized containment and cleanup of any discharge shall be submitted in writing to the public services department for approval prior to implementation. In the event of a discharge of a hazardous material said person shall immediately notify emergency response officials of the occurrence via emergency dispatch services (911).

(d) The city may require, by written notice, that any owner and/or person engaged in any activity or owning or operating any facility that may cause or contribute to illegal connections or illegal discharges to the city's system or regulated waters to undertake at said owner's and/or person's expense such monitoring and analysis and furnish such reports to the city as deemed necessary to determine compliance with this section.

(e) All owners and/or persons in violation of this division shall address such violations immediately. Violations shall be addressed as set forth in this division by providing a written response to the public services department, outlining the temporary and permanent measures that have or will be taken to correct the violation and a proposed schedule for completion of each of the corrective measures. Corrective actions are subject to the approval of the director.

(f) Persons responsible for a discharge which adversely impacts the system or a regulated water shall be liable for all sampling and analytical costs incurred in monitoring the discharge; any city, county, state or federal fines imposed as a result of the discharge; and the cost of removing or properly treating the discharge for complete restoration of the quality the system and/or regulated waters.

(g) If the owner and/or person responsible for a violation fail to take corrective action approved by the director, the city has the right to take remedial action as provided in this article. In addition to such remedies, the owner and/or person responsible for the illegal discharge or illegal connection shall reimburse all costs incurred by the city in taking such actions and satisfy all liens imposed for the remedial action.

(Ord. No. 2015-03, § 2, 2-17-15)

Sec. 18-91. - Enforcement and penalties.

(a) This article may be enforced by any method prescribed by law, including injunctive relief and the provisions of F.S. Ch. 162, Florida Statutes. The director may issue an administrative order to any person to immediately cease any activity in violation of this article, any applicable law, regulation or permit.

(b) If the owner fails to remedy the violation within the time allotted causing the city to perform or cause to be performed the work necessary to remedy the violation, the city shall bill the owner the city's cost of bringing the real property into compliance. The aforesaid costs shall include all costs to the city, including direct salary, salary overhead (fringe benefits), inspection costs, administration costs, billing costs and penalties. If the owner fails to pay this bill within thirty (30) days of mailing of said bill, the city shall then assess the total amount of costs against the real property improved. Said assessment shall constitute a lien as any special assessment on the property and shall bear the maximum interest rate as permitted by law. In the event that such lien is not paid, the city may enforce and collect such lien as the collection and enforcement of any special improvement liens as provided by this Code or the laws of Florida.

(c) If a violation of this article is continued, each day of such violation shall constitute a separate offense.

(Ord. No. 2015-03, § 2, 2-17-15)

Sec. 18-92. - Construction sites and construction activities.

Construction sites and operations shall be required to maintain during and after all construction, development, excavation and/or alteration operations, structural and non-structural BMPs with the intent to reduce pollutants and sediment in stormwater runoff.

(a) Construction and operations site plans and permits shall be required and reviewed by the city prior to the initiation of construction operations. Site plans shall include descriptions of structures, procedures, and or control measures designed to reduce and control sediment and pollutant loading either directly or indirectly to stormwater runoff.

(b) Construction or construction operations over any existing or planned stormwater management system or any such operations causing interference with any stormwater management system shall not be permitted.

(c) A schedule of inspections for monitoring shall be developed to be carried out during and after the construction and operation phases as conditions to the permit to determine and verify compliance with this section.

(Ord. No. 2015-03, § 2, 2-17-15)

Sec. 18-93. - Industrial sites and industrial activities.

Industrial sites and industrial activities determined by the city to contribute pollutant loadings to stormwater and/or the system shall be inspected and monitored by the city in order to verify compliance with this section.

(a) It shall be unlawful to deposit, spill, dump, or introduce any significant material or pollutants that may contribute contamination to any surface area, stormwater, system, and/or stormwater runoff. It shall be unlawful to deposit, spill, dump or introduce:

(1) Substances that settle to form sludge deposits.

(2) Floatable or suspended substances such as debris, oil, scum, and other materials.

(3) Any significant substance, petroleum product, infectious matter, toxic or hazardous substance or hazardous material onto surface areas or to stormwater management systems.

(4) Industrial wastewater, domestic, cooling or any other wastewater into any area designated to carry stormwater without prior city approval.

(b) Any site and or activity identified as contributing any significant material and or pollutants shall be required:

(1) To develop and initiate structural systems and or non-structural management practices designed to reduce and control the contribution or pollutants to stormwater, surface areas and/or to the system.

(2) To be inspected and monitored by the city in order to verify compliance with this section.

(Ord. No. 2015-03, § 2, 2-17-15)

Sec. 18-94. - Site runoff control.

Operations of any dump site shall be conducted to provide for collection, control and treatment of surface runoff and verification that no significant pollutant contribution to receiving waters shall occur upon discharge of said runoff.

(Ord. No. 2015-03, § 2, 2-17-15)

Sec 18-95. - Alterations or obstructions to stormwater management.

Alterations or obstructions to any stormwater management system, including pump stations, sewer lines, structural controls, catch basins, culverts, wetlands or swales shall be prohibited without prior written approval of the city.

(Ord. No. 2015-03, § 2, 2-17-15)

Sec. 18-96. - Herbicide, pesticide, fertilizer applications.

Companies involved in the application of herbicides, pesticides, fertilizers, or any regulated material shall be required to adhere to the city's fertilizer friendly use regulations ordinance with the intent of minimizing or preventing over application and spills and develop plans for spill response and spill control of said materials.

(Ord. No. 2015-03, § 2, 2-17-15)

Sec. 18-97. - Storage tanks.

The discharge of hazardous and or significant materials from storage tank facilities to ground or surface waters, to surface areas, to ground waters during remediation activities, to stormwater runoff, and/or to any stormwater systems shall be prohibited.

(Ord. No. 2015-03, § 2, 2-17-15)

Sec. 18-98. - Backwash disposal.

The disposal of filter backwash water to stormwater management systems shall be prohibited. Disposal of backwash shall provide for separation before final disposal to:

(a) Irrigation of pervious surface areas where sufficient pervious area exists, remote from water supply wells, disposal systems, pits, and septic tanks.

(b) disposal deep injection well.

(c) Sanitary sewers after prior written approval by the city.

(Ord. No. 2015-03, § 2, 2-17-15)

Sec. 18-99. - Litter, littering material.

The accumulation, placing, sweeping, scattering, throwing, or dumping of litter, or littering material such as dead plants, yard clippings, stagnant water, rubbish, debris, trash, including any wrecked derelict or partially dismantled motor vehicle, trailer, boats, machinery, appliances, furniture or similar article, or any unsanitary, hazardous or significant material upon any surface area, stormwater system or water body within the city is hereby prohibited.

(Ord. No. 2015-03, § 2, 2-17-15)

Sec. 18-100. - Stormwater interagency agreements and stormwater programs.

The city is authorized to develop interagency agreements and mutually compatible programs with the South Florida Water Management District, Florida Department of Transportation, all other local governmental agencies, and all private agencies; with the intent to control the contribution of pollutants within inter-system stormwater management system linkages; in order to develop mutually compatible stormwater management programs and systems; and, to develop and enforce stormwater management, inspections, and monitoring programs.

(Ord. No. 2015-03, § 2, 2-17-15)

Sec. 18-101. - Determination of compliance or non-compliance.

The city shall be granted the authority to determine the compliance or non-compliance with this article based on investigation, surveillance, monitoring, sampling, testing, and or sound engineering and operational evaluations; and, as required in any applicable violation hearing or process.

(Ord. No. 2015-03, § 2, 2-17-15)

Sec. 18-102. - Effluent standards and water quality criteria.

The city adopts the criteria set forth in section 62-302, Florida Administrative Code, "Surface Water Quality Standards", as amended from time to time, as the minimum surface water criteria and effluent standards for discharges to surface water.

(Ord. No. 2015-03, § 2, 2-17-15)

Sec. 18-103. - On site drainage.

Prior to the issuance of a building permit for construction on property, a site drainage plan and drainage computations shall be submitted for approval by the director or designee. The drainage plan must indicate facilities which will totally contain on-site a three-year one-hour storm event and such facilities must be constructed prior to final inspection by the city.

(Ord. No. 2015-03, § 2, 2-17-15)

REFUSE AND RECYCLING DIVISION

The Refuse Division oversees: Refuse Office Administration, Residential Services, Commercial Services, Recycling Division and Roll off Dumpster Services.

Refuse Division

The Refuse Division mission is to work to provide exceptional refuse service for the residential and commercial customers of Lake Worth City. The Refuse Division is committed to working with the residents, businesses and all city departments in an effort to keep and enhance the beauty of the community.

Office Administration

The Refuse administration is responsible for all supervisory and administrative duties in the refuse division. Administration creates weekly schedules, establishes routes, inspects equipment, schedules equipment maintenance, and handles customer inquiries.

Residential Services

The residential services Division is responsible for providing timely and safe household refuse collection, at the curbside, form residences and small businesses twice a week. Automated and semi-automated loading vehicles are used to collect refuse from customers for a fee.

Commercial Services

The Commercial Services Division is responsible for providing the collection of commercial bins, compactors and roll-off containers to customers who must, by City Ordinance; use commercial container service (dumpsters) to dispose of their refuse. Customers are primarily businesses and multi-family residential complexes. Both front-end and semi-automated vehicles, specially designed to pick up bins and compactors containers, are used to provide this service. The City currently provides collection service from one day a week to six days a week, depending on volume.

Recycling Services

The Recycling is responsible for implementing, monitoring and administering the Department's comprehensive recycling program. This included curbside and multi- family recycling, yard waste recycling, office paper and commercial recycling programs. The cities recycle tracking program will be up and running in fiscal year 2012, residents will enjoy rebates from this unique program.

Roll-off Services

This is a service provided solely by the City of Lake Worth Refuse Division. Roll-off containers are primarily for larger sized jobs and require large roll-off containers at competitive pricing. The division will continue to educate citizens on the proper usage of roll-off containers. Pricing for roll-off services can be located in the City's Schedule of Fees and Charges for Services.

Solid Waste Equipment Operator Safety Training Process

A strong safety program is key to the City of Lake Worth's success. The Department has made it a priority to prevent accidents and be more safety conscious during day-to-day operations.

The Refuse and Recycling Division uses a comprehensive hiring and training process to ensure that all Solid Waste Equipment Operators (SWEO) follow the established guidelines for driving and collection of refuse and recycling for the City of Lake Worth.

This safety training program gives each SWEO the knowledge to safely drive and operate solid waste equipment. As part of the Public Services Department safety training program, the Refuse and Recycling Division prides itself in obtaining high customer satisfaction ratings while driving and operating in a safe manner on city streets. This safety training program consists of the following six elements:

The Hiring Process

Hiring is a four-step process. It starts with the review of applications by a Human Resources Analyst who reviews all of the applications for minimum qualifying *application standards* set by the Public Services Department. For example, an important requirement for applicants is to have an adequate amount of heavy equipment driving experience.

If an applicant is qualified at the application stage then they will be invited to participate in a *driving skills assessment* test, which requires them to safely and effectively maneuver an obstacle course in a garbage truck while being timed.

If the applicant successfully maneuvers through the obstacle course without hitting too many obstacles, they will be invited to participate in the *interview process* where they will be interviewed by a panel of four supervisory staff from within and outside the solid waste field.

The final criteria before being selected to become a SWEO for the City of Lake Worth is for the applicant to take and score high enough on a *personnel selection inventory (PSI)* assessment, which is administered manually or electronically by solid waste staff, which is helpful in identifying customer service and safety-oriented employees.

Field Training

The first step in the field training is to assign the new SWEO to an authorized training SWEO. The authorized SWEO is one who has been authorized to train after undergoing "train the trainer" training in how to properly train the new SWEO. A new SWEO will generally train with his peer (training SWEO) for two to three weeks on the operation of equipment and route collection. The trainer and trainee will sign off on a training log, which tracks the new SWEO's progress. After the new SWEO reaches the point where they have progressed to completing 80 percent of the route, then his new Foreman and Division Supervisor will sign off that the SWEO is ready to go out on a route alone.

The second step in field training is to assign the new SWEO to a training route after being signed off by trainer and management staff. The SWEO is on probation for the first ninety days and is evaluated on performance at the six-month period. This evaluation period is most crucial to properly evaluate the new SWEO's progress and offer them whatever assistance is needed in order to improve. The Foreman and Division Supervisor review the new SWEO's evaluation closely before signing off on their six-month evaluation.

Refresher Training (Tailgate Meetings)

Training for all SWEOs is an ongoing process in which they get weekly "tailgate meeting" training on the division's safety program. The Human Resources Department also has a Risk Manager with dedicated Safety Experts who provide training when requested. In addition, the division has a safety committee, which meets quarterly to discuss employee safety concerns.

Post-Accident Training—Accident Reduction Training (ART)

Performance Standards and Accountability

City of Lake Worth SWEOs are held to strict performance standards and safety is a prime concern. SWEOs are rated on their performance standards yearly as part of their annual performance evaluation. SWEOs are held accountable for any reported garbage misses on their routes, garbage spills, staff complaints and fluid spills.

In addition, SWEOs are held accountable for any chargeable or preventable accidents. A strong safety program is key to the department's success in preventing accidents and the Public Services Department has made it a priority to assist SWEOs to prevent accidents and be more safety conscious during day-to-day operations. Industrial accidents have also been of concern to the City of Lake Worth and by providing personal protection equipment to staff, injury accidents have also decreased.

Finally, no safety program would be successful if not for the constant follow-up and reminders that SWEOs are given daily to make they are conducting proper pre and post trip inspections. The City of Lake Worth pre- and post-trip program consists of random pre-trip inspections, which occur weekly as well as quarterly random safety inspections of safety equipment. In addition, pre-trip testing occurs at the time of each SWEO's yearly performance evaluation. The inspection forms are available in "Section V. Fleet Maintenance".

Finally, no safety program would be successful if not for the constant follow-up and reminders that SWEOs are given daily to make they are conducting proper pre and post trip inspections. The City of Lake Worth pre- and post-trip program consists of random pre-trip inspections, which occur weekly as well as quarterly random safety inspections of safety equipment. In addition, pre-trip testing occurs at the time of each SWEO's yearly performance evaluation. The inspection forms are available in "Section V. Fleet Maintenance".

Performance Standards and Accountability

City of Lake Worth SWEOs are held to strict performance standards and safety is a prime concern. SWEOs are rated on their performance standards yearly as part of their annual performance evaluation. SWEOs are held accountable for any reported garbage misses on their routes, garbage spills, staff complaints and fluid spills.

In addition, SWEOs are held accountable for any chargeable or preventable accidents. A strong safety program is key to the department's success in preventing accidents and the Public Services Department has made it a priority to assist SWEOs to prevent accidents and be more safety conscious during day-to-day operations. Industrial accidents have also been of concern to the City of Lake Worth and by providing personal protection equipment to staff, injury accidents have also decreased.

Finally, no safety program would be successful if not for the constant follow-up and reminders that SWEOs are given daily to make they are conducting proper pre and post trip inspections. The City of Lake Worth pre- and post-trip program consists of random pre-trip inspections, which occur weekly as well as quarterly random safety inspections of safety equipment. In addition, pre-trip testing occurs at the time of each SWEO's yearly performance evaluation. The inspection forms are available in "Section V. Fleet Maintenance".

Transfer Station Rules

Operators must become familiar with all Transfer Station rules and adhere to them. Operators and Refuse personnel must maintain themselves in a professional manner at all times as they are representing the City of Lake Worth.

Operator Responsibilities

1. No employee of this city shall remove or cause to be removed or disposed of, for the employee's individual Use or benefit, article or material placed curbside for collection and disposal, including the contents of any bag, Receptacle, tank or container used for the collection and disposal of solid waste.
2. Employees shall maintain a professional appearance at all times. Uniforms to be clean and name tags to be visible and affixed to the shirt pocket.
3. City Human Resources policies to be followed at all times.
4. Operators shall maintain safe operating practices and ensure all safety devices on the equipment are in sound working condition. Daily safety inspections are required on the forms provided by the Division supervisor.
5. Operators shall maintain the equipment in a neat, clean and orderly manner performing the proper maintenance duties before and after every collection period.

Refuse and Recycling – Code

See City of Lake Worth Municipal code – Chapter 12 Health and Sanitation

Refuse and Roll-off Fees

See the City of Lake Worth Schedule of Fees and Charges for Services

GROUNDS AND CEMETERY DIVISION

Landscape maintenance at city owned buildings

The Grounds Maintenance Division is responsible for all landscape maintenance at city owned buildings such as City Hall, City Hall Annex, Library, Shuffle Board Building, Osborne community Center, Community Development Corp. Building, Utilities Administration-Warehouse, Streets/Storm Water-Refuse building, Safety Complex, Fire Station# 2 and the Public Services Administration Building. The Maintenance at these locations includes all lawn, tree, and shrub maintenance including mowing (contracted), blowing, trimming, chemical weed control, and trash and debris removal.

Landscape and janitorial maintenance at all parks

This Division is also responsible for the landscape and janitorial maintenance at all parks; Howard Park, South Palm Park, Bryant Park North and South, Constitution-Blue star, Sunset Ridge Park, Spillway park, Barton Park/ Beach, Triangle park, Old bridge Park, Cultural Plaza and athletic field common areas including North-West Base Ball Field, Sunset Ridge Soccer Field, Memorial Park Football/Soccer Field. The maintenance in these areas include all mowing(contracted), blowing, hedge trimming, tree trimming, trash pick-up, empting of trash cans and planting. An integral part of the Grounds Maintenance duties in these areas is janitorial maintenance of the park pavilions and rest rooms utilizing Grounds Keepers, which Includes restocking toiletry items, cleaning toilets/sinks blowing and/or hosing of picnic pavilions.

Maintenance of medians and right of ways

Due to numerous inter-local agreements the Grounds Maintenance Division is tasked with the maintenance of medians and right of ways, many of which are not owned by the city or are out of the city limits. These areas are Interstate I-95 interchanges and right of ways (state), Lake and Lucerne right of ways and tree wells (state), Dixie Highway (state), Federal Highway (state), A-1A median (state), 10th Ave North (city/CRA), 6th Ave South (County/CRA), Boutwell Rd(county) South Palm Way Blvd (city), and Wing Field Street (city). Lake Worth Road Round-About and medians which are owned by the state and a portion of them are outside of the city limits. The current inter-local agreements require the city to assume all maintenance in these area including tree and hedge trimming, mowing, chemical weed control, trash pick-up, garbage can emptying and maintenance of irrigation systems.

Mowing of vacant lots

The Ground Maintenance Division also manages the contract for the mowing of vacant lots and foreclosed properties that are owned by the city. This includes mowing, trash pickup, and the reporting of unsafe conditions such as unsecured areas of entry and possible squatters.

Unpaved rights of ways and streets

The division also maintains the vegetation in unpaved rights of ways and streets which including periodic mowing, invasive vegetation removal, and trash pickup.

Maintain closed landfills

In accordance the Federal Environmental protection Agency requirements the Grounds Maintenance Division manages the contract to maintain two (2) closed landfills. The maintenance in these areas includes mowing (contracted), weed control, tree trimming, fence/gate repair, and clearing of methane pits and testing wells (in-house).

Special event services

This Division also provides set up assistance and clean up and custodial services for all City sponsored/co-sponsored events organized by the Greater lake Worth Chamber of Commerce including the City Holiday Parade, Street Painting Festival, Reggae Fest, Tropic Fest (fourth of July), Hispanic Fest, and the Tropical Triathlon. This Division also provides clean and custodial services at all other events that are held in city parks and properties. All of the events impact the Division's overtime and operating budgets

Downtown and supplemental watering

The division also uses a water truck to water all the trees and pots in the Lake and Lucerne corridor, newly planted trees and shrubs and in other areas that do not have an automatic irrigation system which is vital to the survival and vigor of the plants.

Tree Board Support

The Grounds Maintenance Division supports the Lake Worth City Tree Board by assisting with the Annual Festival of Trees, the Annual Shade Tree Give-Away, maintaining the Tree Board's City web page, posting notices, agendas and minutes to the web page.

Cemetery Operations

The City of Lake Worth owns two active cemeteries; Pine Crest and I.A. Banks. Grounds division is responsible for the maintenance and administration of these cemeteries. The main responsibilities are providing year round burial and cremation services for residents and non-residents.

The cemetery employees prepare grave sites for burials and the internment of cremated remains including digging graves, preparing site for services by placing casket lowering device, artificial turf, and erecting tents and dismantling the same after the service. Employees assist visitors in finding graves, coordinating with funeral homes, showing lots for sale, answering questions in person and over the phone, and work with the City Clerk's Office to maintain accurate records of burials.

The cemetery workers also perform landscape maintenance of 18.75 acres including all tree/ shrub trimming. The mowing, edging and weed whacking around 7,913 headstones is currently being performed by contractors. The City is responsible for perpetual maintenance of the cemetery grounds including all landscape maintenance, maintenance of roads and walk ways, and records.

Cemetery plots may be purchased in accordance with the City's Schedule of Fees and Charges for Services through the office of the City Clerk.

The Grounds and Cemetery Divisions are responsible for the grounds maintenance at the following locations:

- Bryant Park (18.8 acres)
- Howard Park (8 acres)
- I.A. Banks Cemetery (1.4 acres)
- Wimbley Gymnasium (1 acre)
- Sunset Ridge Park (5.6 acres)
- Spillway Park (2.7 acres)
- Federal Hwy sites (13th Ave North and Fed, Blue Star and Constitution Park) (0.5 acres)
- Wellesley and Notre Dame Drive (0.25 acres)
- City Hall (1.2 acres)
- Cultural Plaza (1.2 acres)
- Dixie Hwy Medians (Unknown 0.25 acres?)
- J Street Parking Lot (0.3 acres)
- Triangle Park (1.1 acres)
- Public Safety Complex (0.7 acres)
- Fire Station # 2 (1.2 acres)
- Shuffleboard Courts (0.9 acres)
- Lake Worth Beach Casino Project / Barton Park (4.7 acres)
- South Palmway Medians (3.5 acres)
- South Palm Park and 2 adjacent lots (2.5 acres)
- Old Bridge Park / Causeway (1 acre)
- A-1-A Medians and ROW on SW corner of A-1-A and bridge (Unknown 0.25 acres?)
- 1900 2nd Ave North (Unknown)
- 1880 2nd Ave North (Unknown)
- Boutwell Road between Lake Worth Road and 2nd Ave North (Unknown)
- 2nd Ave North ROW between Boutwell and Keller Canal
- Green Belt (1.2 acres)
- 6th Ave South entrance sign (Unknown)
- 10th Ave North entrance sign (Unknown)
- 12th Ave South entrance sign (Unknown)
- “A” Street and Lake Worth Road Round-A-Bout (Unknown)
- Public Works Facility (Unknown)
- Memorial Park (Unknown)
- Redding Road / ROW on west side of South Landfill by Barton Elementary
- Lavue ROW (Unknown)
- 17th Ave North Natural area west of “A” Street (Unknown)
- North “H” Street Passive Park (1 Lot)
- South “F” Street Passive Park (1 lot)
- Substation at 12th Ave South and Tropical Drive
- Substation at 6th Ave South and “G” Street
- 1500 Lake Osborne Drive (2 acres)

- North West Ball Fields (27.5 acres)
- Library
- “L” Street Parking lot between Lake Ave and Lucerne Ave.
- Lake Worth Road Medians from “A” Street to Keller Canal
- 6th Ave South Medians from “A” Street to Dixie Hwy
- 10th Ave North Medians from “A” Street to Dixie Hwy
- South Landfill (60 acres)
- “K” Street Parking Lots (2) Downtown south of Lake Ave
- Pinecrest Cemetery (17.2 acres)
- Wingfield Road Median
- All Vacant Lots owned by the City (Around 25 at present)
    - All properties owned by The City of Lake Worth such as:
    - Unimproved Roads and ROW’s owned by the City (All over the place)
    - Retention area between 2nd and 3rd Ave North just east of I-95 (2 acres?)
    - Bradford Lane west of “A” Street

This is a list of the areas that are maintained by Grounds. Additional properties are added or removed as they are acquired, sold, or leased.

Specific duties of the Grounds Maintenance Division are as follows:

- All grass mowing, string trimming, edging and blowing off of sidewalks and roadways.
- All pruning and trimming of hedges, shrubs, and ground covers.
- All trimming of trees and palms.
- All mulching of plant beds and trees.
- All weed control and spraying of herbicides and insecticides.
- All irrigation responsibilities including :
    - Programming of all time clocks
    - Preventative maintenance and checking of all systems which includes
        - Checking the time clock
        - Checking for operation of each valve and solenoid (1 per zone)
        - Checking for good operation of all sprinkler heads on each zone (5 – 80 heads/zone)
    - Repairs to the irrigation system when failures happen.
- All janitorial and custodial work at the City Parks, Restrooms, and Pavilions which includes:
    - Opening and Closing of all Parks and Restrooms every day of the year.
    - Cleaning of all sinks, toilets, floors, walls at restroom facilities.
    - Daily restocking of toiletry supplies.
    - Washing and cleaning of pavilions and picnic table areas.
    - Emptying of all garbage cans throughout the park and restroom areas.
    - Picking up of all trash.
    - Picking up all vegetative debris (Ex. Palm fronds, tree branches, etc…)
    - Emptying of all Pet Waste Stations
- Fence repair and removal
- Removal of dead animals from City owned properties, streets and ROW's.
- Removal of all alley way and ROW trash and illegal dumping.
- All dumping of garbage cans located on Lake Ave, Lucerne Ave, Dixie Hwy, 10th Ave North and 6th Ave South.
- Watering of all downtown planters with water truck.
- In charge of hurricane board up's for the following locations:
    - 1724 12th Ave South (Grounds / Cemetery Building)
    - Osborne Center / Head Start Building
    - Public Safety Complex
- String trimming the over 7,500 headstones at Pinecrest Cemetery.
- All Funeral service and grave preparations at Pinecrest and I.A. Banks Cemetery.
- Assisting families with finding grave locations and genealogical information.
- Clean – Up at all Festivals and Special Events.

FLEET MAINTENANCE

INTRODUCTION

Background

The Fleet Maintenance Division of Public Services, is an internally service funded organization established to provide a professional fleet management program in support of the missions of City's departments. Transportation must meet the individual needs of each City department in vehicle procurement, assignment and maintenance turn-around. Transportation must have the flexibility to respond to changes in user requirements swiftly and positively.

General

All City vehicles acquired by the City and maintained by the Fleet Maintenance Division are recommended for maintenance and replacement in accordance with this Manual and all departments are responsible for complying with the guidelines / procedures contained herein. The guidelines for vehicles considered for replacement are based on vehicles meeting predetermined age and/or mileage criteria, which are outlined in this Manual.

Additional consideration will also be given to functionality, safety, and overall condition of the fleet.

Priority will be given to those departments whose services relate to public health, safety and utility services. As vehicles reach the targeted miles or age of replacement criteria, a vehicle maintenance evaluation will be performed. Vehicle costs per mile relative to averages for the vehicle class will be analyzed to determine if the vehicle would be economical to retain for an additional year or targeted for disposal. In some cases, it may be re-assigned to other departments with "low usage" requirements or assigned to the motor pool.

The Division Supervisor and department will jointly review and approve all specifications for new purchases of City vehicles and motorized equipment. Recommendations will be provided to the Board in an attempt to avoid a common problem in the industry known as a "fleet creep", which describes a situation where both the overall size of the fleet- and the size/expense of the units within the fleet – increases over time.

Mission

Fleet management's mission is to provide and maintain the most appropriate, safe and reliable vehicles, allowing departments to better serve the community.

Goals

Under these guidelines, the annual outlay for fleet replacement is being addressed in a consistent and predictable manner. This is much less disruptive to the annual budget preparation process than in previous years when the outlay for fleet replacements would rise and fall dramatically from year to year.

Implementing the policies and procedures allows the Division to gradually reduce the average age of the City fleet, thereby reducing maintenance down time and increasing the productivity of those operations that are heavily and appearance of the fleet has also had a positive effect on employee morale, which has led in turn to employee attention to the care of their assigned vehicles.

FLEET RECORDS

Vehicle Identification

Every City vehicle will be identified by a Reference number. This number will be clearly marked on all vehicles and equipment. In addition, most City-maintained vehicles are marked with a City Seal sticker or insignia of the using department or agency, with the exception of unmarked, confidential or vehicles designated for disposal. A Motor Vehicle List shall be maintained, updated, and made available through the Division supervisor and Administration's office.

Registration and Insurance

The City's Finance Department will be responsible for the registration of all City-owned vehicles and for custody of the original titles. The records for all City owned vehicles will kept and filed in the Finance Department.

The Finance Department will register all newly purchased City vehicles, regardless of the department assignment or funding source. The Department of Finance will ensure that all lease payments for approved replacement vehicles are assigned to their individual departmental operating budgets. Fleet Maintenance will cancel registrations on vehicles designated as permanently Out-of-Service and/or deemed ready for disposal.

The City's Risk Management Division will be responsible for insurance documentation and renewals of insurance. A copy of the current Insurance certificate shall be placed in the glove box of all assigned City vehicles by the using Department / Agency. As every department/agency has varying numbers of assigned, spare, fleet and/or pool vehicles, additional copies will need to be made by the participating departments. This process should help expedite and more efficiently distribute the information into the fleet.

It is imperative that the correct insurance information be placed in all fleet vehicles. As vehicles are directed into the shop for scheduled or un-scheduled maintenance, the Fleet Maintenance Division will check to ensure that the current insurance and registration information has been placed in the vehicle.

Licensing and Tags

Fleet Maintenance will assign, transfer, and/or retire all vehicle license tags with the Department of Motor Vehicles. All licensing fees will be absorbed by the Fleet Maintenance Division's operating budget.

Motor Vehicle List

The Fleet Maintenance Division shall maintain a current list of all City-owned vehicles (tagged) and off-road motorized equipment (un-tagged). Prior to October 1 each year, the Transportation Division shall audit the list of all City motor vehicles and off-road motorized equipment owned, leased, or otherwise used by the City denoting the department, office and division to which it is assigned; the vehicle's make, model, engine size, transmission, optional equipment, registration, and the individual(s) assigned to the vehicle, if appropriate, with the exception of confidential vehicles.

The Motor Vehicle List is reviewed annually for all vehicles in excess of ten (10) years old. This listing of vehicles is evaluated by Fleet Maintenance Supervisor and the Risk Manager to determine if insurance levels can be reduced from physical insurance coverage to liability coverage only.

Vehicle Classes

Vehicles and heavy equipment are divided into the following classes for the purposes of administration and charge back:

- Autos and light trucks – includes automobiles, vans, utility vehicles, and trucks less than or equal to one (1) ton.
- Trucks – ½ to 1 ton
- Heavy trucks – includes all tagged trucks over one (1) ton, Class A Road tractors, Class A trash trailers or semi-trailers, and Class B passenger bus vehicles and Class dump trucks.
- Off-road motorized equipment – trailers and other rolling attachments (i.e., brush chippers, pavement rollers).

Non-Vehicle Classes

- Trailers – non-motorized trailers and other rolling attachments (i.e., brush chippers, pavement rollers).
- Other – the acquisition and maintenance of motorcycles, bicycles, golf carts, boats, all-terrain vehicles and other similar means of transportation are not covered under this manual.

VEHICLE CATEGORIES

Dedicated and Assigned Vehicles

Dedicated vehicles and off-road motorized equipment are those assigned to specific department(s) or organization(s) for their exclusive use when required for the regular performance of duties and daily use. When authorized, a Motor Pool (Loaner) Vehicle Form will be completed and returned to the Fleet Maintenance Division. Use of motor pools, whether for individual departments/agencies or consolidated efforts among two or more users, is encouraged to increase vehicle use and improve the efficiency of the fleet.

Non-Dedicated Vehicles

Surplus non-dedicated/spare/loaner vehicles are assigned to the Fleet Maintenance Division and are available to City departments on an as-needed, first come-first served basis. In general, if a vehicle is available and an individual chooses to utilize personal transportation, mileage reimbursement approval shall be determined by the Department Head, unless there is a more cost-effective alternative.

Motor Pool Vehicles

Before acquiring a vehicle for permanent assignment, evaluate the possibility of temporary or shared use of a motor vehicle from a motor pool. Passenger cars, general-duty pickup trucks, cargo vans, passenger vans, and sport utility vehicles are all ideal candidates for pooling, as are specialty trucks and equipment that various work groups can use (for example, a dump truck or tractor backhoe). These latter vehicles are often overlooked as possible pool vehicles, but heavy-duty equipment and special mobile equipment used infrequently by one work group can often be shared with another, thereby saving the organization the expense of two costly vehicles with low utilization.

Take-Home Vehicles Use

The Department Head will have the discretionary authority to assign its dedicated vehicles to department personnel, but authorization of vehicles/equipment for Take-Home Use and determination of who will be allowed to use a Department vehicle on a 24 hour basis shall be decided by the City Manager. The Take Home Vehicle Program provides significant value to enhance emergency response opportunities and the efficient development of essential personnel.

Authorization for the Use of Vehicles / Equipment

In addition to operating during normal working hours, some positions require response to special situations or events outside these hours. The goal of this policy is to aide in the effort to provide critical services during off-duty hours with minimum additional cost. Only those employees who have positions that require the use of vehicles or equipment to carry out their official duties should be authorized to use department vehicles and equipment.

The use of department vehicles on a 24-hour basis is authorized only for those employees who are on-call hours each day and who are routinely required to report back to duty during non-working hours.

Each department shall maintain records of all vehicle assignments including a Vehicle Utilization Log (Appendix I) for each vehicles. Utilization Logs must be forwarded to the Finance Department at the end of each month.

Assignment of Take-Home Vehicles

Only essential, on-call personnel are authorized. This initiative should help reduce mileage and fuel consumption. Take Home Vehicles shall be assigned based on the intended use of the vehicle and the frequency / need for the employee to respond to after-hours and weekend emergencies or work.

Take Home Vehicles may be assigned to City employees who are called out at least 12 times per quarter, or 48 times a year, and have primary responsibility to respond to emergencies. With City Manager approval, Department Heads may assign a Take Home Vehicle for positions that are called out less than these prescribed standards, if the justification demonstrates a critical need that, without having the vehicle readily available, would jeopardize the safety of citizens or City assets.

Under-Utilized Vehicles

The process of evaluating the fleet includes the identification of vehicles that show patterns of low use that could potentially be re-assigned or identified as surplus. The Minimum Utilization Guidelines were adopted as a part of a Vehicle Reduction Program initiated by the Department to remove excess fleet capacity. Assuming 100% utilization equals 20,000 miles or 2,000 hours per 12-month period, any vehicle driven less than 5,000 miles per year shall be classified as “under-utilized” and should not be eligible as a dedicated vehicle.

It is expected that, in very few circumstances, that utilization below the following minimum levels will not warrant a “designated vehicle” status: passenger vehicles and light trucks: 400 miles per month, Medium and heavy duty trucks: 200 miles per month, Motorized equipment: 20 hours per month. Under-utilized vehicles may be returned to the Feet Maintenance Division for re-assignment and /or disposal.

Impact of Vehicle Age on Utilization

The correlation between age (months) and annual use (miles) is obvious and is a condition observed in fleet operations – older vehicles are driven less than newer ones. There is clear relationship between fleet size and the age of an organization's fleet.

Old vehicles are unreliable compared to new ones and are prone to unpredictable breakdowns. Consequently, fleet users who are allocated old vehicles take steps to add additional units to the fleet to provide a pool of backups and spares so they can continue to operate when a front-line vehicle breaks down.

SPARE VEHICLE RECOMMENDATIONS

Overall City-Owned Fleet

In general, industry sets standards for the number of active "spares" that should be available for regular fleets at between 10-15%. The following standards are recognized:

- Solid Waste Transfer Heavy Equipment. The recommended level of spare vehicles in 10%.

Lower Spare Ratios

Lower spare ratios for operations can generally be maintained if the following issues have been addressed:

- Average Age of the Fleet. The ability to regularly replace older vehicles with new vehicles increases the reliability of the fleet and reduces the maintenance effort required.

- Fleet Consistency. The uniformity of the fleet enables maintenance staff to standardize maintenance procedures and reduce parts inventories, which leads to reduced maintenance efforts.

- Maintenance Program. The efficiency and effectiveness of maintenance staff, as well as the relative importance within the organization of maintaining the fleet at a very high level, reduces the need for a large spare ratio. The ability to provide specialized and continuing training to maintenance staff also increases the effectiveness of the maintenance program. Mid-life refurbishment of the fleet also extends the life of vehicles and increases the reliability of the fleet.

ACQUISITION & REPLACEMENT

Overview

To centralize all City fleet vehicle replacement(s) into a single entity and to establish a dedicated, multi-year acquisition and replacement program. On 2015, the initial program recommendations were presented to the Commissioners and included a prioritized needs listing based on utilization, age, compatibility with the rest of the fleet, condition, fuel economy, safety / repair records, serviceability and available funding levels.

As typical programs may run anywhere from four to ten years in length, a vehicle replacement schedule was presented to the Commissioners by the Department of Public Services

Responsibility

Effective XXXXX, the Fleet Maintenance Division was responsible for updating and administering the Commissioners' approved multi-year Fleet Replacement Program (FRP) for both vehicles and equipment. The multi-year program is re-confirmed annually by the Fleet Maintenance Division and a recommended priority replacement listing is provided to the Board for funding consideration.

Guidelines

As a general rule, the Replacement Guidelines are not used as hard and fast *rules* to determine which vehicles and equipment items will be retained in or removed from the fleet. Rather, they are to be used as performance

indicators that trigger reviews between the Division and using Departments. Annual mileage is *not always* a good indicator of the need for a vehicle. Some vehicles are heavily used even though they do not accumulate a lot of miles. Thus, while high mileage rates usually are a good indication that a vehicle is needed and should be retained, the opposite cannot necessarily be said of low mileage rates. *Low mileage* vehicles are not necessarily *low-usage* or *low importance* vehicles. They may or may not be vital to the performance of employees' job duties and agencies' missions. Additional consideration will also be given to functionality, safety and overall condition of the vehicle.

Priority Codes

Priority will be given to those departments whose services relate to public health and safety and code enforcement. As vehicles reach the targeted miles or age of replacement criteria, a vehicle maintenance evaluation will be performed by the Division. Since a large portion of the fleet remains eligible for replacement, that is why the Department provides a prioritized listing each year to ensure the Board replaces the vehicles and equipment that are in the greatest need of replacement with the funding level made available each year.

Replacement funds will be used to replace the vehicles that have the highest replacement priority, as determined by the Division, in order to assure the safety and efficiency of the entire fleet. Departments wishing to upgrade with a more expensive model will require approval from the Board and a separate justification for funding during the budget process. The following Priority Codes have been established by the Division and are utilized to prepare recommendations to the Board during the annual vehicle and equipment replacement evaluation:

PRIORITY CODES

A	=	High Priority Replacement - emergency & critical vehicles
B	=	Medium Priority Replacement
C	=	Low Priority Replacement
DIS	=	Disposal - recommended for or already disposed of
G	=	Grant - vehicles purchased/replaced by Grant funding
NA	=	Non Applicable - special equipment, loaners, spares
OND	=	Ordered/Not Delivered

Recommendations

The Division will ensure that all City vehicles and equipment are essential to performance of departmental missions and will identify those vehicles and equipment that are no longer necessary or not utilized to the fullest extent. The fleet will be analyzed to determine whether or not it would be economical to retain a vehicle for an additional year, should be recommended for disposal, reassigned to a department with "low usage" requirements, or placed in the Fleet Motor Pool. Recommendations for new and disposition of the existing fleet are provided to the Board annually.

Final Approval

Motor vehicle and equipment replacement acquisitions are only permitted for those prioritized by the Division for replacement and approved by the Commissioners. It is the responsibility of the Fleet Maintenance Division to coordinate the purchase, inspection, accept the delivery, license and tag all new vehicles and equipment. New vehicle acquisitions may be authorized by the Board via individual departmental request(s) recommendation by the Division based on an analysis of the overall fleet. The method of funding such as general fund, exempt, guaranteed buy-back lease etc. will be determined by the Finance Department.

Specifications

The Division will establish standard specifications for sedans, light trucks, and other tagged vehicles and off-road motorized equipment to the extent feasible. User departments will be responsible for developing specifications for specialty vehicles, non-standard equipment, and any other deviations from standardized specifications. User departments are required to justify requested changes to standardized specifications. User department are required to justify requested changes to standardized specifications. The user agency will be afforded an opportunity to review the final specifications prior to release for bid.

Age and Mileage

Where the vehicle is expected to meet or exceed the replacement cycle criteria by the end of the fiscal year, or prior to the anticipated replacement date; and/or where the vehicle is determined to be beyond its' useful life. Do not repair a vehicle if its fair market value is less than $500. Due to conversion costs, do not repair a police vehicle for continued police use if its fair market value is less than $2,000.00

Operating, Maintenance and Repair Costs

Where the vehicle would require extensive repairs to enable operation during the succeeding fiscal year. Consider replacing a vehicle that has a history of excessive repairs or excessive operational costs, but has not reached either the mileage or time component of the standard replacement cycle. In addition to the provisions of this Section, the following terms and commentary should be noted:

-- Rebuilding. Vehicles to be rebuilt should be at the end of the minimum normal service life, as previously described, and in need of major structural and / or mechanical rebuilding.

-- Overhauls. Overhauls are usually a part of sound maintenance practices to keep vehicles in a "state of good repair" and in some instances to extend the service life of vehicles and equipment.

-- Downtime. When a vehicle is not available for service, it still has a cost per hour, per diem or per mile. This cost should be indexed and unacceptable variations should be noted.

-- Obsolescence. Is a function of work need. Obsolescence equipment usually does not meet the requirements of the using department. Obsolete equipment renders crews, no matter how skilled, unable to perform their work, or creates a needless higher cost to perform the needed services.

Residual Value

When the parts and labor for maintenance and repair become 30% of the residual value of any one vehicle, the replacement cycle of that vehicle should begin. By the time the replacement actually takes place, the maintenance and repair costs will probably be between 50-100% of the residual value. At 100%, the maintenance and repair costs are exactly what the vehicle is worth. A ratio of over 100% should be avoided to the fullest extent possible. These costs can be either a one-time or an accumulation of all repair costs for that vehicle over the preceding year. For those assets near the end of their useful lives, maintenance costs tend to be significantly increased.

Condition

Based on a thorough review of the vehicle's condition, the vehicle is beyond economical repair (i.e., the estimated body and/or mechanical repairs for passenger and light trucks exceeds 50% of the vehicle's "Blue / Black Book" fair / average market value), the Kelly Blue Book (KBB) is one source that takes into account options, condition, mileage, market conditions and depreciation; and where the vehicle has been involved in an accident and is considered a "total loss" (non-repairable). The total cost of repair shall be no greater than 80% of the vehicle's fair market value.

Utilization

Based on vehicle reduction goals, best practices for managing fleet size and economic costs associated with vehicle operation, the Minimum Utilization Guidelines (excluding specialty vehicles) are utilized to help determine whether or not to justify assigning a full-time dedicated vehicle(s) to a City user(s):

MINIMUM UTILIZATION GUIDELINES

Vehicle Standard-Type	Mileage Standard (yr.)	Minimum Standard
Sedan/Passenger Vehicles	10,000 – 12,000 miles	6,000 miles
Light Trucks/Pick-Ups (<12,500 lbs.)	8,000 –10,000 miles	6,000 miles
Med. Trucks/SUV/Vans (>12, 5000 lbs.)	9,000 – 11,000	5,000 miles
Truck Tractors	10,000 miles or 400 hours	250 hours

Continuing to dedicate such a unit to a user department or agency that does not meet the above guidelines would be a waste of resources that could be much better utilized. In general, vehicles, equipment and tools with under a 60% utilization measured in time/usage/frequency of use should be disposed of. With the exception of specially equipped vehicles, industry standards as low as 4,800 miles per year (for passenger and light duty trucks) and 2,400 miles per year (for heavy duty trucks) have been suggested by the National Association of Fleet Administrators.

Utilization standards may vary by department and can be determined by calculating the departmental average (miles/year) for each class of vehicle and reviewing all vehicles as a whole, plus individual vehicles where utilization falls below the departmental average. During the evaluation process of seemingly under-utilized vehicles, it is critical to develop information on their use and importance to a Department or Agency that simply cannot be reflected in a single metric such as a weekly, monthly, or annual mileage. Low-mileage vehicles are not necessarily low-usage or low importance vehicles.

Impact of Fleet Age and Mileage on Annual Costs

In order to determine the average age of the fleet, specialty equipment, low usage equipment, spare vehicles, loaners, etc., should be removed from the calculation in order to obtain a more accurate estimate of programmatic needs of the "Eligible Fleet". *Depending on the age of the fleet, another option could be to reduce the average age of the "eligible" fleet (vehicles and equipment) by at least one (1) year, each year, until the current replacement policy is met.*

Green Fleet Initiatives

All vehicle procurement specifications will be reviewed and modified as necessary to ensure that the specifications are written in a manner flexible enough to allow the purchase or lease of alternatively fueled *(AFV)* or electric drive-train vehicles. *The Division will identify vehicles that can be reasonably replaced with more sustainable, higher miles per gallon (30-35 mpg), lower or zero-emission (ZEV), alternative fueled, flex-fueled (E85), and more efficient types of vehicles. In addition to establishing motor pools, the following Green Fleet initiatives should be considered in the replacement,* purchase of new and / or leasing of vehicles:

Fuel Economy

It is important for fleet managers who provide on-site fueling services, automatic fuel dispensing systems and other fueling services to be familiar of several performance measures:

Measure	Indicates
Average fuel consumption (miles per gallon) by vehicle and by class	Energy efficient of the fleet
and by class	Fuel efficiency
Fuel cost per mile	Efficiency of fueling services for comparison
Fully burdened rate per gallon of fuel	Inventory efficiency turnover ration
Month-end inventory in dollars and gallons	Compliance Green Fleet initiatives petroleum-based
Percentage of alternative fuel versus fuels	

Right-Sizing

Where practical, larger vehicles should be downsized based upon vehicle usage and job responsibilities.

Alternative Fuels

Replacement of a vehicle with an alternate fuel model will be done whenever feasible, particularly medium and heavy duty vehicles. Examples of other solution include the possible use of: bio-fuels – ethanol, bio-diesel; natural gas – compressed (CNG) and liquefied (LNG) or even blended with hydrogen; electric technology; propane converted from standard gasoline vehicles; shared vehicles and satellite motor pools; hybrids – diesel and gasoline electric, hydraulic; PHEV) Plug in Hybrids) – gasoline and diesel electric; stacked technology – hybrids on bio-fuels and PHEVs on bio-fuels. Use of Ultra low Sulfur Diesel (ULSD) can reduce emissions up to 10 percent.

Hybrids

The Fleet Maintenance Division currently has two hybrid vehicles in the fleet which are used as a pool car and a high use car. The Hybrids are utilized for out of town trips and in general as a fuel efficient and preferred vehicle for the City. The City has a positive experience with these vehicles and will further integrate these into the fleet upon the replacement schedule.

Minimum Vehicle Miles Traveled (VMT)

For vehicles that operate on fixed routes, such as maintenance routes and meter reading routes, route optimization should be employed. In general, all routes should be planned to optimize the route and trips chained together to reduce required travel time and distance. Supervisors should:

-- Encourage meetings at centralized locations to reduce necessary travel;

-- Encourage and enable alternate meeting methods, such as conference calls, to reduce the number of necessary trips;

-- Vehicles shall not be left idling unless a running engine is necessary to protect public safety, to prevent harm to contents of the vehicle, run auxiliary equipment in performance of a job, or to maintain health of occupants while performing duties. Vehicles are not to be left idling for extended periods; and

-- Where applicable and/or appropriate, suggest employees use alternative modes of transportation, such as buses, light rail, carpools, vans, or bicycles.

Idling Reduction

Increased awareness and promotion of idling reduction guidelines to improve local air quality, increase fuel efficiency, reduce engine "wear and tear", save maintenance expenses and help lower green house gas emissions is recommended. Studies have shown that idling of vehicles consumes approximately 17% of the fuel that a vehicle has on board, which equates to between 0.6 gallons per hour for an averaged sized gasoline engine and 0.8 gallons per hour for an idling diesel truck engine. For trucks, idling engines operate at 3-11 % efficiency, compared to 40% efficiency while driving. Installing diesel-fired heaters in trucks to warm coolant, engine block and hydraulic reservoirs before shift-start can also eliminate early-morning idling.

Guidelines generally establish maximum idling times (ie.5-30 minute duration) for different vehicle and equipment types, seasonal variations, and exemptions for transit and emergency operations as follows:

-- The driver of a City vehicle (tagged) should:

- Turn off the engine and remove keys from the ignition upon reaching a destination; and
- Not allow an engine to idle at any location for more than five minutes during any one-hour period.

-- The driver of an off-road piece of equipment (un-tagged) should:

- Turn off the engine and remove keys from the ignition when the attendant is on breaks or at lunch; and
- Not allow an engine to idle at any location for more than five minutes during any one-hour period.
- Idling should not be permitted solely for the comfort of the driver or passenger(s).

Retread Tires

The Fleet Maintenance Division is active in the re-treading of tires and practices this process regularly. It is estimated that for each re-treaded tire purchased, that approximately 15 gallons of crude oil could be saved, compared to the oil required to manufacture a new tire.

Environmentally Preferable Purchasing (EPP)

The use of environmentally friendly products is highly encouraged as is supporting the City's recycling program by buying recycled products. The EPA has several publications that recommend recycled content levels to assure environmentally preferable purchasing is achieved. At a minimum, the Fleet Maintenance Division will make an effort to purchase re-fined lubricating oils, retread tires, tires containing post-consumer recovered rubber and bio-based products, wherever they are reasonably available and meet vehicle manufacturer specifications.

FUELING

Fueling Facilities

The Fleet Maintenance Division is responsible for controlling access to the City operated fueling facility and to ensure compliance with Federal and State regulations pertaining to fuel dispensing, automation and expansion of fuel depots. All City-owned vehicles should be fueled at City facilities unless traveling out of the City. All City vehicles should be fueled using regular unleaded gasoline, diesel, or other alternative-fuels as are recommended by the vehicle manufacturer. Special fuel key fobs are obtained only through the Fleet Maintenance Division through authorized personnel only.

Non-City Facility Fueling

If a vehicle is traveling outside the City and fueled at a non-City owned fueling facility, the operator must obtain a receipt showing the fuel type and gallons purchased, and file a copy with their respective department within 48 hours of return to the City. Copies of fuel purchases will be requested by the Finance Department.

Fuel Procurement

The Fleet Maintenance Division, through the Procurement Office, will be responsible for procuring all gasoline, diesel and alternative fuels for City vehicles and equipment primarily through the State of Florida Fuel Purchase Contract and local vendor contracts. The Division is also responsible for tracking fuel consumption and maintaining adequate inventories at the fueling facility in accordance with the provisions of this Manual. User departments / agencies will be invoiced on a monthly basis.

Motor Pool Fueling

Operators will receive motor pool vehicles and are responsible for fueling, if needed. In the event additional fuel, lubricants or emergency repairs are required, the operator will request authorization for such services as follows:

-- During normal City business hours - See the Division Manager / Coordinator for the motor pool / spare fleet fuel key(s).

-- During normal City business hours - Operators must return vehicles fully fueled and the using Agency/Department is responsible for all fuel costs.

-- After City business hours - Use Departmental fuel keys for City-owned vehicles. An employee will be reimbursed for emergency vehicle fuel by the respective agency/department based upon submission and approval of valid receipt(s). Any emergency repair expenses shall be reimbursed by the Division based upon submission and approval of valid receipt(s).

The data collected by the automated fueling system will allow the Division to record the vehicle mileage (or hours) on a regular basis. This information will be used by the management system to monitor the vehicle's utilization, to identify vehicles that are due for preventative maintenance, and to identify vehicles that are approaching or beyond replacement guidelines. In addition, the system will provide information on changes in the vehicle's fuel consumption, which may be indicative of potential maintenance problems.

Safety

Vehicle operators shall stay with the pump hose when re-fueling to help prevent inadvertent fuel spills. The operator is responsible for reporting any fuel leaks or fuel hose breakages. All vehicle fuel caps are to be replaced and fueling hoses are to be returned and secured to the pump mount. The use of cellular phones and / or smoking while re-fueling is strictly prohibited.

Fuel Keys

Only assigned vehicle fuel keys are to be used to fuel Departmental vehicles. The use of another vehicle’s fuel key is prohibited. If repairs to your assigned vehicle are extensive and require an extended period of time to complete, a loaner and motor pool fuel key will be provided by the Division. It is requested that the exact current mileage of your vehicle be entered at the pump in order ensure our maintenance and replacement programs have accurate data.

MAINTENANCE and SERVICE STANDARDS

Maintenance Facility Assignments

The Fleet Maintenance Division will assign all City vehicles to repair in-house or outsourced. As a general rule, inspections, preventive maintenance, minor repairs, and interim compliance work are performed in-house. Heavy equipment and Emergency maintenance may be outsourced and performed by a facility other than the assigned facilities if previously authorized by the Fleet Maintenance Division.

Preventive Maintenance (PM) Guidelines

A poor maintenance program can negatively affect both the fleet and fleet-cost performance by increasing downtime, increasing the probability of unsafe vehicles and reducing resale value for vehicles at the time of disposal. As such, all City-owned vehicles must be under a preventive maintenance program.

The Division is responsible for ensuring the scheduling and performance of preventive maintenance for all County vehicles. Preventive maintenance and periodic inspection procedures help to prevent failures from occurring while the vehicle is being operated. Once a week, or more frequently as required, the Supervisor will identify vehicles and equipment that are due for preventive maintenance checks. The Supervisor will also check the availability of parts required by established minimum preventive maintenance inventory levels.

The users are responsible for contacting the Vehicle Maintenance Division or bringing their assigned vehicle(s) into the shop by the mileage or date posted on the oil change sticker. In some instances, the using Department may be sent a preventive maintenance notification reminder at least one (1) week in advance of the scheduled maintenance. If it is necessary to re-schedule the preventive maintenance appointment, the using department must do so no later than 48 hours prior to the scheduled appointment. At that time, the Supervisor will re-schedule the preventive maintenance appointment within two (2) weeks.

Preventive maintenance for heavy trucks and equipment will be accomplished according to the manufacturer's specifications at minimum. After completing each preventive maintenance service, the Division will place a sticker on the vehicle indicating the miles (or hours) when the next preventive maintenance check is due for Levels A, B and C. Such procedures also reduce reliance on the driver, who may have limited skill and knowledge for detecting vehicle deficiencies.

PREVENTIVE MAINTENANCE SCHEDULE

I. Automobiles, Vans, Utility Vehicles and Light Trucks

Level A	Every 5,000 miles
Level B	Every 10,000 miles
Level C	Every 30,000 miles

Recommended: 5,000 mile maintenance schedule - A1, B1, A2, B2, A3, A4 & C

II. Heavy Trucks*

Level A	Every 5,000 miles
Level B	Every 10,000 miles
Level C	Every 30,000 miles
DOT	Annually or every 25,000 miles

III. Heavy Equipment*

New Fleet Pieces	100 service hours or two weeks
Level A	Every 250 service hours or monthly
Level B	Every 500 service hours or 3 months
Level C	Every 1,000 service hours or 6 months
Level D	Every 2,000 service hours or 1 year

Recommended maintenance schedule: A1, A2, B1, A3, A4, B2, A5, A6, C1

After completing each preventive maintenance service, the Transportation Division will place a sticker on the vehicle indicating the miles (or hours) when the next preventive maintenance check is due. The user must notify the Transportation Division if the vehicle is within one (1) week of the next required maintenance, based on reasonable anticipated use if they have not been previously contacted by the Division. It is essential for all operators of City vehicles to cooperate by making the necessary adjustments in their schedules to ensure that routine and preventive maintenance service performance goals are achieved. If needed, a temporary loaner vehicle and fuel will be provided by Vehicle Maintenance until the maintenance of an agency / Department's assigned vehicle is completed.

MAINTENANCE SCHEDULING and PRIORITIES

The Fleet Maintenance Supervisor is responsible for all scheduling and assigning of work. If conflicts arise between regularly scheduled work, the Supervisor will make decisions regarding priorities and will contact the affected user agencies about the status of vehicles/ equipment being safely placed back into service.

Unauthorized Service and Repairs

User departments and agencies are not authorized to repair or perform any service to vehicles and equipment titled to the City, unless otherwise specified or with the prior approval of the Fleet Supervisor. In addition, City facilities, equipment, and supplies shall not be utilized for repair and/or maintenance of personal vehicles.

OPERATOR MAINTENANCE CHECKS

Vehicle Inspections

Federal and State laws require that drivers may not drive a vehicle unless he/she is satisfied that it is in safe operating condition. Prior to using a motor pool vehicle, it is mandatory that the vehicle be visually inspected by the employees utilizing the vehicle. Employees using motor pool vehicle, it is mandatory that the vehicle be visually inspected by the employee utilizing the vehicle. Employees using motor pool vehicles must complete a Motor Pool (Loaner) Vehicle Form (Appendix I) and describe any problems, malfunctions or changes in the condition of the vehicle that were noted. This will ensure that they are not held responsible for subsequent damage to motor pool vehicles.

Pre-Operational Checks

Failure to perform pre-operation checks may result in break downs and/or damage to the vehicle/equipment. An operator/driver is also in a position to detect vehicle deficiencies that cannot be detected by periodic preventive maintenance and inspection procedures. Hours of lost vehicle time could be reduced if each driver would operate vehicles in a caring and cautious manner:

- 10-Minute Walk – Around Inspection. Operators are responsible for performing a daily walk-around of their vehicles and heavy motorized equipment. In addition, at each re-fueling or at least once a week, a 10-Minute Walk-Around Inspection (Appendix II) should be performed using the approved Form in Appendix II for automobiles and light trucks, which includes the following:
- Tire and body physical condition
- Engine inspection (belts, hoses, fluid levels and leaks of any kind)
- Exterior lights, signals and windshield wipers
- Interior lights, gauges and horn
- Windows, windshield wipers, and interior features
- Miscellaneous (i.e., valid State Inspection Certificate and license plates)
  Operator's Daily Checklist. Heavy truck operators must perform a daily inspection and complete the Operator's Daily Checklist (Appendix II). Use of any other forms other than those included in this manual are prohibited unless prior approval from the Division is granted. Daily inspections include:

  - General condition of power unit
  - Fluids (oil, radiator, battery, hydraulic, transmission, washer...) and belts
  - In-cab condition (lights, gauges, backup alarms, windshield wipers)
  - Exterior condition
  - Transmission inspection
  - Brake inspection
  - Towed unit inspection

  Inspections Forms: Inspection for motor pool and dedicated vehicles must be filed on a daily basis with the responsible agency supervisor. If operational deficiencies or need for repairs are noted, the supervisor is responsible for submitting a Vehicle Maintenance Repair Checklist Form (Appendix III) to the Division. A mechanic and/or the Supervisor will perform a review of the vehicle based on the remarks.

Vehicle Maintenance Mechanic Responsibilities

Vehicle Maintenance mechanics will perform the following general service activities:

-- Topping fluids and changing oil
-- Inflating, rotating, replacing and balancing tires
-- Repairing and painting vehicle / equipment bodies and frames
-- Replacing wiper blades, lights, lamps, fuses and mirrors
-- Performing computer diagnostics on electrical and engine systems
-- Greasing and lubricating bearings, joints, fittings, etc.
-- Performing front end alignments, cleaning lines, etc.
-- Repair of transmission, brake, heating and air conditioning systems
-- Sharpening of blades, turning of drums and rotors, etc.
-- Road service repairs for off road equipment

User Department and Agency Responsibilities

User departments and agencies will not be responsible for the following:

-- Normal preventive maintenance activities including oil changes, lubes, tune-ups, etc.
-- Replacing hoses and hydraulic lines
-- Rotating (except for installing spares) and repairing tires

FLEET ADMINISTRATION

Mechanic Certification / Training / Licensure

The City does not require all motor equipment mechanics to obtain National Institute for Automotive Service Excellence (ASE) certification, or other specific training and licenses. However, the City does encourage all fleet staff to improve and maintain proficiency through a variety of activities. In addition, the Fleet Maintenance Division plan to continue requesting funding in order to provide education, apprenticeships, and certification opportunities for its employees to be well versed with industry standards and technologies.

Mechanic Tools and Uniforms

The City is responsible for providing all fleet maintenance mechanics with tools, uniforms, safety shoes, test equipment, safety equipment and selected specialized tools. The City will also replace tools that are stolen, lost, or broken during the conduct of City business. All reports of lost, stolen, or broken tools and equipment should be made to the Supervisor at the time the incident occurs.

MOTOR POOL (LOANER) VEHICLE FORM

User's Name (*Print Clearly*):

Department:

Office Phone: Cell Phone:

Loaner Vehicle Plant #: (**User's Vehicle** Plant #:)

Date checked out: Mileage:

Date checked in: Mileage:

It is required of every operator that the gas tank be filled prior to returning the vehicle, no matter how minimal the hours or mileage used. The motor pool vehicle gas key is available at the Department of Public Works, Supervisors office. *This key cannot be kept by the operator and must be returned to the Supervisor.* During refueling, do not use a gas key from another vehicle as it affects fuel and maintenance records for the vehicle.

Prior to removing the vehicle from the City premises, you are required to perform a cursory visual inspection of the vehicle. Upon returning to the City premises, again you are required to perform a cursory visual inspection of the vehicle. Should there be changes to the condition of the vehicle, it must be noted below and reported to the Department of Public Services - Fleet Maintenance Division.

I understand and agree to the conditions contained herein.

Signature: Date:

PLEASE RETURN THIS CHECKLIST TO:

Department of Public Services – Fleet Maintenance Supervisor

CITY OF LAKE WORTH TAKE HOME VEHICLE AUTHORIZATION FORM

I understand that I have been approved for
(printed name)
the use of Vehicle Number to drive to and from work. I understand that this vehicle is to be driven by
me and to be used exclusively for City-related business. I agree that I will not use this vehicle for personal reasons. I understand that under no circumstances will I use this vehicle if my ability to drive has been impaired in any way. This includes being under the influence of drugs (including prescription drugs), alcohol, illness, or any other condition that could impair by ability to drive safely.

I further agree that I will maintain my legal ability to operate a vehicle in the State of Florida as well as my insurability. I understand it is my responsibility to notify my supervisor within 24 hours of any change in my ability to drive, to remain insurable, or of any traffic citations that I receive.

In the event of any vehicle-related accident involving damages or injuries, I agree to submit to a drug test. Failure to abide by the above policies is cause for immediate termination of employment.

I agree to the above policy and requirements and have received a copy of the City's Take Home Vehicle Policy.

Employee Signature: Date:

The Vehicle identified above is parked at the following address after work hours:

Vehicle Inspection (VI) Forms

10-Minute Weekly Walk Around Inspection VI001

Driver's Vehicle Inspection Report..... VI002

Operator's Daily Inspection Checklist VI003

10-Minute Walk-Around Inspection (Autos, Light Trucks)

Each of the following items must be checked once a week.
Hazards / malfunctions must be noted in the right column.

Driver: _____ Date: _____
Vehicle Make/Model: _____ VIN: _____

Check each box when that item has been inspected. If authorized, correct problem (e.g. add engine oil, install light bulbs, etc.).

Hazard or Malfunction

1. Tire pressure: adjust to cold pressure as indicated by manufacturer:
   __ Left front ___Left rear ___ Right front ___ Right rear ___ Spare

2. Tire condition: check for tread wear, cuts and penetrating objects:
   ___ Left front ___Left rear ___ Right front ___ Right rear ___ Spare
3. Engine Inspection:
   ___ Brake fluid aligned with indicator to mark on reservoir ___ Power steering fluid in "Operating Range" when tested warm ___ Coolant recovery tank filled to "Cold" range
   ___ Engine oil in "Operating Range" when engine idling
   ___ Transmission fluid in "Operating Range" when engine idling
   ___ Inspect hoses for flexibility, cracks, splits or signs of leakage
   ___ Radiator (top and bottom) ___Heater ___Air conditioning ___ Power steering
   ___ Inspect belts for tightness, cracks or signs of wear
   ___Fan belt ___Power steering belt ___Air conditioning belt
   ___ Windshield washer fluid at proper level
   ___ Remove debris in radiator core
4. Exterior lights: operational, clearly seen, no broken covers:
   ___ Standard headlights ___High beam headlights ___Parking lights
   ___ Reverse (backing lights ___Tail lights ___Brake lights
5. Interior lights: operational and easily seen by driver:
   ___ Speedometer ___Turn signals (left & right/front & rear)
   ___ Overhead ___Glove Box ___Vanity
   ___ Instrument panel (oil, temperature, engine, brake & generator lights)
6. Windows and interior features:
   ___ Wipers and washer operational with no cracks
   ___ Inspect for cracks, chips, etc., in windshield and other windows ___ Ensure all windows open and close properly
   ___ Inspect all mirrors (interior rearview and left and right exteriors) for cracks and ensure mount is firm
   ___ Seat adjusters functional
   ___ Inspect seat belts for frays, tears, etc.
   ___ all door locks and release handles functional
   ___ Brake pedal working properly; not "soft" when depressed
   ___ Emergency brake and emergency brake release functional
7. Miscellaneous:
   ___ Insurance certificate current and valid ___ Registration current and valid
   ___ License plates (front and rear) securely fastened ___ Emergency kit and tools in trunk
   ___ License plates (front and rear) securely fastened ___ Emergency kit and tools in trunk

DRIVER'S VEHICLE INSPECTION REPORT

(AS REQUIRED BY THE DOT FEDERAL MOTOR CARRIER SAFETY REGULATIONS)

CARRIER: _____

ADDRESS: _____

DATE: _____ TIME: _____ A.M. _____ P.M. _____

TRACTOR/
TRUCK NO. _____ ODOMETER READING: _____

Air Compressor	Horn	Suspension System
Air Lines	Lights	Starter
Battery	Head-Stop	Steering
Body	Tail-Dash	Tachograph
Brake Accessories	Turn Indicators	Tires
Brakes, Parking	Mirrors	Tire Chains
Brakes, Service	Muffler	Transmission
Clutch	Oil Pressure	Wheels and Rims
Coupling Devices	Radiator	Windows
Defroster / Heater	Rear End	Windshield Wipers
Drive Line	Reflectors	Other
Engine	Safety Equipment	
Exhaust	Fire Extinguisher	
Fifth Wheel	Reflective Triangles	
Frame and Assembly	Flags - Flares - Fuses	
Front Axle	Spare Bulbs and Fuses	
Fuel Tanks	Spare Seal Beam	
Generator		

TRAILER(S) NO(S).

Brake Connections	Hitch	Tarpaulin
Brakes	Landing Gear	Tires
Coupling Devices	Lights - All	Wheels and Rims
Coupling (King) Pin	Roof	Other
Doors	Suspension System	

REMARKS:

_____

_____

_____

CONDITION OF THE ABOVE VEHICLE IS SATISFACTORY

Driver's Signature: _____

Above Defects Corrected
Above Defects Need Not Be Corrected for Safe Operation of Vehicle

Mechanic's Signature: _____ DATE: _____

Driver's Signature: _____ DATE: _____

OPERATOR'S DAILY CHECKLIST

Check: (√) if OK. (_____) Use (X) to indicate defect and explain under remarks.
Equipment Unit No. Make: Date:

Operator: Odometer /Hour Reading:

POWER UNIT

GENERAL CONDITION	IN-CAB	EXTERIOR
Cab / Doors / Windows	Gauges / Warning Indicators	Lights
Body / Doors	Windshield Wipers / Washers	Suspension
Oil Leak	Horn (s)	Tires
Grease Leak	Heater / Defroster	Wheels / Rims / Lugs
Coolant Leak	Mirrors	Battery
Fuel Leak	Fire Extinguisher	Exhaust
FLUIDS & BELTS	Spare Fuses	Air Lines
Engine Oil Level	Seat Belts	Load Covers
Coolant Level	Cab Clean	Other
Belts	Flares	
Hydraulic Oil	First Aid Kit	
Transmission Oil		

CHECK BEFORE BEGINNING WORK

Transmission-shifts easy, stays in gear	PTO Unit
Clutch-grab, slip, chatter	Cables-wear and lubrication
Unusual noise	Cutting edge / teeth-wear / broken
Back-up Alarm	Brakes
Steering	Body / Frame

TOWED UNIT (S)

Frame / Deck	Suspension	Kingpin - Upper Plate
Tie-Downs	Tires	Fifth-Wheel
Lights	Wheels / Rims / Lugs	Other Coupling Devices
Reflectors	Brakes	

USEABLE **NOT USEABLE**

REMARKS

Maintenance Action: _____ "X" in Circle Indicates Repairs Made

Checked & Repaired By: _____ Date: _____

INSPECTON PROCEDURE

HAVE ALL DEFECTS CORRECTED BEFORE DEPARTURE

1. Approaching equipment (unit), note general condition. Look for leakage of water, fuel or lubricants under unit.

2. Engine compartment: check water (radiator) and crankcase (oil) levels. Check blades, belts, etc., for cracks, excessive slack and wear.

3. START ENGINE, let idle for warm-up. Listen for abnormal noises. Check gauges for normal readings. If equipped with air brakes, be sure "low air" warning is operating if air pressure is below 60 pounds.

4. Check emergency equipment, horn9s), windshield wipers. Turn on all lights including4-way flasher switch for turn signals. Check steering wheel action.

5. Leave cab to check headlights and marker lights. Switch headlights on and check both beams, then turn off headlights only. Leave all other lights on.

6. Check front clearance and identification lights.

7. Check left and right front wheels, tires, lugs or studs. Check for leaks around hubs.

8. Check right side of cab, door, mirrors, etc., and check lights and reflectors along the right side as inspection progresses.

9. Check right rear tires, wheels, lugs or studs. Note any thrown lubricant.

10. Check rear of body, mud flaps, rear lights (clearance and identification, stop, tail, turn signals) rear reflectors, rear-end protection.

11. Check left rear tires, wheels, lugs or studs. Check for thrown lubricants.

12. Check lights and reflectors on left side as inspection progresses.

13. re-enter cab. Re-check all gauges. Air pressure should be at maximum.

14. Check parking brake.

15. Check brakes and stoplights. With fully charged system, check air brakes.

16. Turn off 4-way flasher and actuate and check left and right turn signals.

17. Make a test stop before leaving yard. Check tires twice daily or every 100 miles.

18. At end of day, let equipment idle for 3-5 minutes to cool down before shut-down, refuel equipment, clean cab and check for leaks after parking. Drain air tanks daily.

19. Attach this Form to the Equipment Service Request to report vehicle condition to your Supervisor and the Shop.

VEHICLE MAINTENANCE (VM) FORMS

Vehicle Maintenance Request Form.....VM001

Level A - Preventive Maintenance.....VM002

Level B - Preventive Maintenance.....VM003

Level C - Preventive Maintenance.....VM004

Annual Preventive Maintenance Report VM005

Vehicle / Equipment Replacement Evaluation VM006

Vehicle Maintenance Request Form

Plant Number: Date:

Mileage: _____ _____

_____

Vehicle Maintenance Service Requested:
(includes oil change and checks tires, brakes & fluids)

Regular PM Service

Tires, Check/Replace*

Brakes, Check/Replace*

Engine, Check*

Transmission, Check*

Tune Up*

Window Repair/Novice*

Other*

Emergency Communication Repairs Only:

Radio / Emergency Light* (Deliver Request to Radio Technician)

New Equipment Installation*

*Describe each problem below (not required for PM Service):

Date & Time Vehicle Needed Back: □ **Waiting**

Loaner Vehicle Issued (Plant Number):

_____

_____

_____

_____

Vehicle Keys are Located: ____□ In Vehicle □ with VM □
Drop Box □ N/A

Requestor:_____ Phone/Cell _____

(Please Print Clearly) (Provide even if Waiting)

_____ _____

FORM VM001

PREVENTIVE MAINTENANCE CHECKLIST

BATTERY

___ Examine battery cables for damage and clean battery

CLUTCH (If applicable)

___ Check clutch action, correct as required
___ Check clutch master cylinder, inspect for leaks
___ Check shock absorbers for leakage
___ Grease throw-out bearing and linkage
___ Replace or lubricate if necessary

INSTRUMENTAION

___ Check, repair, or replace as required all instruments & gauges
___ Windshield washer refill container
___ Check heater, defroster, air conditioner
___ Check & clean all signaling devices, mirrors, reflectors, clearance lights
___ Inspect sheet metal, paint, bumpers, mud flaps, seat belts, sun visors & pedal pads
___ Check speedometer & tachometer operation

CHASSIS

___ Inspect air intake for leaks
___ Check for fuel, oil & exhaust leaks
___ Inspect springs, U-bolts, shackles
___ Inspect exhaust system for leaks or damage
___ Inspect doors & window regulators, handles, hinges, stops, racks, etc.
___ Inspect driver's seat, horn, wind-shield, wiper/washers, turn signals, hazard, washers, turn signals, hazard warning lights
___ Inspect tail gate and lift mechanism, check wheelchair lift & interlock system (vehicle should not move with lift deployed)
___ Lubricate chassis, if applicable
___ Change engine oil & filter
___ Lubricate lift gate and wheelchair lift

TIRES AND WHEELS

___ Check and adjust tire pressure
___ Check rims for damage or looseness
___ Check for tire damage & wear

BRAKES

___ Check & fill master cylinder

COOLING

___ Fill radiator-check for leaks
___ Check belts, inspect for cracks, adjust or replace
___ Test anti-freeze

REAR AXLE (If applicable)

___ Inspect for oil leaks
___ Check the breather vent for clogging
___ Check drive shaft(s), U-Joints

ROAD TEST

___ Check steering
___ Check transmission controls
___ Check brakes including parking brake
___ Check for excessive vibration

REGISTRATION

___ Check for current inspection sticker(s)
___ Install P.M. sticker

ENGINE

___ Service air cleaner
___ Check PCV system
___ Inspect air Intake for leaks

FRONT AXLE AND STEERING

___ Check CU belts for cracks or tears, replace if necessary
___ Inspect power steering system, fill reservoir if required
___ Check wear of tie rods, drag link, steering arm, ball joints, or kingpins and wheel bearings, if necessary
___ Clutch slave cylinder, inspect for leakage, replace if necessary
___ Check clutch cable, inspect for wear

PREVENTIVE MAINTENANCE CHECKLIST (Con't)

TRANSMISSION (MANUAL)

___ Check and adjust gear oil level

Inspect unit for leaks

TRANSMISSION (AUTOMATIC)

___ Check fluid level
___ Inspect unit for leaks

VIN:_____

Mechanic: _____

Make:_____

Year: _____

FORM VM002

PREVENTIVE MAINTENANCE CHECKLIST

BATTERY

___ Examine battery cables for damage and clean battery

CLUTCH (If applicable)

___ Check clutch action, correct as required
___ Check clutch master cylinder, inspect for leaks
___ Clutch slave cylinder, inspect for leakage, replace if necessary
___ Grease throw-out bearing and linkage
___ Check clutch cable, inspect for wear
___ Replace or lubricate if necessary

COOLING

___Fill radiator-check for leaks
___Check belts, inspect for cracks, adjust or replace
___Test anti-freeze
___Clean frontal area of radiator

INSTRUMENTAION

___ Check, repair, or replace as required all instruments & gauges
___ Windshield washer refill container
___ Check heater, defroster, air conditioner
___ Check & clean all signaling devices, mirrors, reflectors, clearance lights
___ Inspect sheet metal, paint, bumpers, mud flaps, seat belts, sun visors & pedal pads
___ Check speedometer & tachometer operation

CHASSIS

___ Inspect springs, U-bolts, shackles
___ Inspect exhaust system for leaks or damage
___ Inspect doors & window regulators, handles, hinges, stops, racks, etc.
___ Inspect driver's seat, horn, wind-shield, wiper/washers, turn signals, hazard, washers, turn signals, hazards warning lights
___ Inspect air intake for leaks
___ Inspect tail gate and lift mechanism, check check wheelchair lift & interlock system (vehicle should not move with lift deployed)
___ Lubricate chassis, if applicable
___ Change engine oil & filter
___ Lubricate lift gate and wheelchair lift

TIRES AND WHEELS

___ Check and adjust tire pressure
___ Check rims for damage or looseness
___ Check for tire damage & wear

BRAKES

___ Check & fill master cylinder
___ Adjust / replace as required front & rear brake linings, drum
___ Check & replace hoses as required
___ Bleed brake lines
___ Check calipers and wheel cylinders for leakage & replace as required

REAR AXLE (If applicable)

___ Inspect for oil leaks
___ Check the breather vent for clogging
___ Check drive shaft(s), U-Joints
___ Test pinion shaft for looseness

ROAD TEST

___ Check steering
___ Check transmission controls
___ Check brakes including parking brake
___ Check for excessive vibration

REGISTRATION

___ Check for current inspection sticker(s)
___ Install P.M. sticker

ENGINE

___ Replace fuel and air filters
___ Check for fuel, oil & exhaust leaks
___ Service air cleaner
___ Check PCV system

FRONT AXLE AND STEERING

___ Check steering wheel free play-clean, service as required
___ CU belts for cracks or tears, replace if necessary
___ Inspect power steering system, fill reservoir if required
___ Check wear of tie rods, drag link, steering arm, ball joints, or king pins and wheel bearings, if necessary
___ Check shock absorbers for leakage, replace if necessary

PREVENTIVE MAINTENANCE CHECKLIST (Con't)

TRANSMISSION (MANUAL) (AUTOMATIC)

_____Check and adjust gear oil level

_____Inspect unit for leaks

TRANSMISSION

_____Check fluid level

_____ Inspect unit for leaks

WHEEL CYLINDERS

VIN: _____

Mechanic_____

Make: _____

Year: _____

FORM VM003

ANNUAL PREVENTIVE MAINTENANCE REPORT

Make: _____ Model _____
_____Year_____

Agency Name: _____Tag #:_____

Manufacturer's Vehicle ID Number
_____

COMAR 11.22.03	Components	Passed	Failed	Date Repaired*
02	Alignment			
03	Suspension			
04	Steering			
05	Brake Systems - Hydraulic/Vacuum			
06	Brake System - Air			
07	Tires			
08	Wheels, Rims, Lock rings, Studs and Nuts			
09	Accelerator Pedal and Air Throttle			
10	Fuel Storage and Deliver System			
11	Exhaust System			
12	Universal Joints and U-Clamps			
13	Vehicle Frame Body and Sheet Metal			
14	Lighting			
15	Electrical System			
16	Emergency Equipment			
17	Seats and Seat Belts			
18	Sun Visor			
19	Mirrors			
20'	Glazing			
21	Windshield Wipers and Washers			
22	Defroster			
23	Auto Trans Gear Selector/Neutral Safety Switch			
24	Speedometer and Odometer			
25	Brake and Clutch Pedal			
26	Horn			
27	Hood, Doors, Steps			
28	Hitches and Coupling Devices			
29	Tanks and Pressure Vessels			

Inspection Date:_____ **Vehicle Mileage:**_____

Inspected By (Print):_____ **Reported By (Print):**_____

Certified By (Print):_____**Signature:**_____

(Owner orauthorizerepresentative):_____

***Provide description of repairs and parts used on 2nd page of this form.**

Page 1 of 2

VEHICLE / EQUIPMENT REPLACEMENT EVALUATION FORM

Vehicles and/or equipment will be evaluated by four criteria: age, mileage operation & maintenance cost condition of body and mechanical components. A baseline is set for each criteria and points are assigned, depending on how the item's data compares to the base standard. The ratings are low, base (equal to the standard), high and extreme. Points are assigned as follows: 1-low, 2-base, 3-high, and 4-extreme.

Replacement Parameters

Age	Condition	Points
	Below base replacement age	0
	< 1 year over base	1
	1-2 years over base	2
	3-4 years over base	3
	4+ years over base	4

Mileage	Condition	Points
	Below base replacement mileage	0
	Base + 10,000 miles (600 hours)	1
	Base + 10,000-20,000 miles (600-1,200 hours)	2
	Base + 20,000 + miles (+1,200 hours)	3

Maintenance Cost	Condition	
	< 5% to 12% of purchase cost	1
	5% to 12% of purchase cost	2
	13% to 25% of purchase cost	3
	> then 25% of purchase cost	4

Condition Evaluation	Condition (See Report Form VM005	Points
	Repair cost <6% of the book value	2
	Repair cost =6% to 18% of book value	3
	Repair cost > 18% of replacement	4

Overall Score **Total Points** _____

***NOTE: Any point total equaling or exceeding eleven (11) indicates that the vehicle should be recommended for replacement. The point total is used to rank its replacement priority, and the larger the number the higher the replacement priority will be. A priority ranking will developed for the entire fleet by class of vehicle regardless of departmental assignment. Priority ranking is intended to serve as a guide and should no way be interpreted as a substitute for the Division's evaluation and recommendations.*

FORM VM006
Page 1 of 2

VEHICLE / EQUIPMENT REPLACEMENT EVALUATION FORM FOR LIGHT VEHICLES

Factor	Points
Age	One point for each year of chronological age, based on in-service date.
Miles/Hours	One point for each 10,000 miles of use.
Type of Service	1, 3, or 5 points are assigned based on the type of service that vehicle receives. For instance, a police patrol car would be given a 5 because it is in severe duty service. In contrast, an administrative sedan would be given a 1.
Reliability	Points are assigned as 1,3, or 5 depending on the frequency that a vehicle is in the shop for repair. A five would be assigned to a vehicle that is in the shop two or more times per month on average, while a 1 be assigned to a vehicle in the shop an average of once every three months or less.
M&R Costs	1 to 5 points are assigned based on total life M&R costs (not including repair of accident damage). A 5 is assigned to a vehicle with life M&R costs equal or greater to the vehicle's original purchase price, while a 1 is given to a vehicle with life M&R costs equal to 20% or less of its original purchase cost.
Condition	This category takes into consideration body condition, rust, interior condition, accident history, anticipated repairs, etc. A scale of 1 to 5 points is used with 5 being poor condition.
Point Ranges Under 18 points Condition I Excellent 18 to 22 points Condition II Good 23 to 27 points Condition III Qualifies for replacement 28 points and above Condition IV Needs immediate consideration	

Page 2 of 2
FORM VM006

BUILDING MAINTENANCE DIVISION

Characteristics of a Good Maintenance Employee

1. A good maintenance employee believes in himself/herself and believes in the importance of their jobs.

2. A good maintenance employee is dependable and punctual.

3. A good maintenance employee is loyal to the City and to their fellow workers.

4. A good maintenance employee is fair and impartial when dealing with others.

5. A good maintenance employee is a peaceful and loyal citizen in the community.

6. A good maintenance employee is courteous and pleasant.

7. A good maintenance employee gives daily attention to personal hygiene and presents a neat and clean appearance.

8. A good maintenance employee looks for new and better ways to do the job and when he/she finds them, put them into practice.

9. A good maintenance employee is an example to many children and tries his/her best to be worthy of their trust.

SAFETY RULES

1. Know location of all fire extinguisher in assigned area. Read and understand the directions on each type of extinguisher in the building. The time to become familiar with the directions is now; not when there is an emergency. It may save your life or that of visitors and staff within the building you are working. Know which extinguishers to use on various fires, especially electrical fires. One may be electrocuted by using the wrong extinguisher or an electrical fire.

2. Keep exit doors free of chains, locks or obstructions while staff or visitors are in the building. Keep passengers free of obstructions.

3. Keep heating and electrical equipment in good working order according to your area of responsibility. Submit a work order for any maintenance concern discovered while in a building.

4. Dispose of trash and debris daily. Do not leave trash and debris in boiler rooms, closet, or at the repairs after a maintenance repair has been completed.

5. Don't let any areas of the City become a "catch all" for items of little or no value.

6. Do not store flammables liquids such as propane gas, mineral spirits, lacquer thinner, paint thinner, turpentine, kerosene and alcohol in the City, other than in approved and ventilated areas. Any unavoidable storage must be in safety cans stored in locked and ventilated storerooms or in locked metal cabinets.

7. Periodic Safety training and demonstrations will be provided to will be required for all designated maintenance staff members as determined by building maintenance.

8. Direct contact with body fluids should be avoided. Use gloves and cleaning procedures designed to protect you. Dispose of the waste properly. The clinics have "sharps" containers for disposals of needles, razors blades, etc. Use the Phenocen disinfectant for body fluid.

Precautions to Avoid Accidents:

Slips and Falls

1. Post "wet floor" signs in needed areas, particularly heavy traffic areas.
2. Avoid foot-ware with slippery soles.
3. Keep your eyes open. Watch for objects that will cause you or others to trip or slip.
4. Look for handrails and use them.
5. Open doors slowly.

Ladders:

1. Choose the right ladder for the job.
2. Avoid over reaching.
3. Never use the top step or rung. If you need more reach, move the ladder, extend it, get another ladder, or get help.
4. Keep one hand on the ladder when climbing up or down; don't try to save a trip by carrying too much.
5. Never use chairs or tables as makeshift ladders.

Lifting Injuries:

1. Size the load and get help if needed. Most injuries occur while lifting heavy or bulky items.
2. Do not lift an object if rolling or placing it on a cart can move it.
3. Hold the object close to body and grip it firmly.
4. Bend knees and keep back straight. Lift with your legs, not your back.
5. Do not twist or jerk. Move with slow, smooth motion.
6. Look where you are going. Do not block your view with a load too large.

Chemical Burns:

Please Note: Maintenance work at times requires the use of potentially hazardous chemicals. When using these products, follow the guidelines listed below.

1. Keep materials labeled and follow directions.
2. Avoid splashing, and wear protective equipment when necessary.
3. Limit exposure to hazardous fumes, liquids and powders.
4. Provide ventilation to the work area.
5. Get medical attention promptly if needed.
6. Never use unidentified products. Turn them in to the warehouse.
7. Do not store hazardous chemicals on overhead shelves.
8. Keep MSDS sheets handy for reference.

Electric Shock:

To avoid the danger of electrocution, use the guidelines below:

1. Ground all equipment before use
2. Do not use splices cords or cords with wires exposed.
3. Do not use any equipment that gives a shock- even a mild one.

General Safety Tips:

1. Change out all burned light bulbs promptly to keep all areas properly lighted.
2. Keep head, hands and arms out of trash bags, cans, and dumpsters.
3. Do not pick up broken glass or unknown substances by hand. Use a dustpan and brush or cut proof gloves.
4. Lift trash bags carefully without twisting or straining your back.
5. Be alert for tripping, slipping, and other hazards that can occur in the building or on the grounds.
6. When using City vehicles, obey all traffic laws at all times. Drive defensively and be alert to pedestrians and/ or other vehicles.

PRODUCT LABEL

Every container of hazardous chemical in the work place must be labeled, taped or marked with the following information:

1. Identity of hazardous chemicals (S) contained therein.
2. Appropriate hazard warnings.

Use the label provide on all unmarked containers.

Red	is for fire hazard
Yellow	is for reactivity
White	is for specific hazard
Blue	is for health hazard

MATERIAL SAFETY DATA SHEET (MSDS) SYSTEM:

The MSDS system is to inform you about the hazards of materials the maintenance employees may encounter in his/her work. It will assist the maintenance employee in protecting himself and in responding to emergencies. The division supervisor has all MSDS sheets and will provide information as needed.

When reading the MSDS, the maintenance employees should think about how to respond to an emergency and how to control day to day exposure to materials.

The MSDS includes the following information:

1. The material properties that make it dangerous to handle.
2. The level of protective gear needed, if any.
3. First aid treatment to be exposure to the hazard.
4. The preplanning needed for handling spills, fires and day to day operations.
5. How to respond to accidents.

When encountering an unfamiliar material, read the MSDS for precautions and scan the sheet health and physical hazards. It is the responsibility of the maintenance employee to read and follow the MSDS instructions.

AMERICANS WITH DISABILITIES ACT (A.D.A.)

Policy:

The Americans with Disabilities Act provides civil rights protection to individuals with disabilities in the areas of employment, public accommodations, state and local government services, and telecommunications. The ADA is intended to enable disabled persons to compete in the workplace based on the same performance standards and requirements that employers expect of persons not disabled. It does not guarantee equal results, establish quotas, or require preferences favoring individuals with disabilities over those without disabilities.

The Americans with Disabilities Act Handbook is available in the Administration office. In general, no individual with a disability shall, on the basis of disability, be excluded from participation in, or be denied the benefits of the services, programs, or activities of the City.

Procedure:

1. If the maintenance staff member becomes aware of any complaints or barriers that are creating a problem for anyone with disabilities, he or she should contact the building division supervisor and the Administration office.

MECHANICAL EMERGENCIES

Policy:

A mechanical/maintenance emergency is defined as any type of system malfunction or act (natural & unnatural) occurring on, within or near city property requiring immediate repairs to (1) avoid further damage to city property (inside and out), (2) restore city security, or (3) to ensure the safety of persons on or within city property. Examples of the above include but are not limited to the following: any broken water lines, electrical

outages, main sewer, and drain line back-up, fire, security problem, vandalism, broken windows/doors, heating/cooling problem, inability to set security alarm, etc.

Procedure:

1. If a mechanical emergency occurs (see above) in a City building after 4:00 p.m. or during non-regular scheduled work hours (example: Saturday work), the person shall contact the Systems Operations Division at 561-586-1695.

IV. CONSTRUCTION STANDARDS AND DEVELOPMENT GUIDELINES

PUBLIC SERVICES - CONSTRUCTION STANDARDS

The City of Lake Worth's Department of Public Services is responsible for the budgeting, design, review, and construction of all construction projects and improvements within the City's municipal right of way system. Projects consisting of water, sewer or electrical improvements are handled by the respective Utility Department within the City. The Department of Public Services is responsible for the following infrastructure construction and improvements:

- Roadway
- Concrete sidewalks and driveways
- Concrete curbing
- Traffic calming
- Stormwater system
- Striping and signage
- Greenway and planting
- Dumpster enclosures
- Erosion control

The associated construction standards and specifications are provided below and also found at the City's website www.lakeworth.org under the "Forms and Spec Sheets" link.

CITY OF LAKE WORTH PUBLIC SERVICES DEPARTMENT

ENGINEERING STANDARD CONSTRUCTION DETAILS INDEX

STANDARD DETAIL TITLE	DETAIL NO.
GENERAL NOTES	01
TYPICAL RIGHT-OF-WAY SECTIONS	02
ALLEY PAVEMENT SECTION	03
ALLEY AND DRIVEWAY TURNOUTS	04
CONCRETE CURB AND GUTTER	05
CONCRETE CURB	06
CONCRETE WALK	07
CONCRETE BUMPER GUARD AND MONOLITHIC CURB AND WALK	08
STOP SIGN AND STOP BAR	09
STREET SIGN DETAIL (1 OF 2)	10
STREET SIGN DETAIL (2 OF 2)	11
CROSSWALK STRIPING	12
PAVEMENT MARKING SPECIFICATIONS (1 OF 2)	13
PAVEMENT MARKING SPECIFICATIONS (2 OF 2)	14
ACCESSIBLE PARKING SIGNAGE AND PAVEMENT MARKINGS	15
TYPICAL PARKING SPACES	16
PAVER BRICK	17
PERVIOUS PAVER SECTION DETAIL	18
PAVEMENT AND SIDEWALK RESTORATION	19
PAVEMENT JOINT	20
UTILITY TRENCH AND PAVEMENT OPEN CUT	21
TYPICAL BACKFILL DETAIL	22
TYPICAL TREE WITH ROOT BARRIER	23
INLET APRON DETAIL	24
EROSION CONTROL NOTES DETAIL	25
INLET FILTER DETAIL	26
SILT FENCE INSTALLATION DETAIL (1 OF 2)	27
SILT FENCE INSTALLATION DETAIL (2 OF 2)	28
STABILIZED CONSTRUCTION ENTRANCE DETAIL	29
SWALE REPLACEMENT DETAIL	30
ASPHALT SPEED HUMP	31
SPEED HUMP PAVEMENT MARKING DETAIL	32

GENERAL NOTES

1. EXISTING UTILITIES. THE CONTRACTOR SHALL BE RESPONSIBLE FOR CONTACTING ALL UTILITY COMPANIES AND "SUNSHINE STATE ONE CALL OF FLORIDA, INC." TO LOCATE ALL EXISTING UTILITIES WITHIN THE CONSTRUCTION AREA PRIOR TO CONSTRUCTION. CONTRACTOR SHALL VERIFY THE HORIZONTAL AND VERTICAL LOCATION OF ALL EXISTING UTILITIES PRIOR TO COMMENCING CONSTRUCTION. THE CONTRACTOR SHALL BE RESPONSIBLE FOR PROTECTING ALL EXISTING UTILITIES DURING CONSTRUCTION AND RESETTING UTILITIES TO NEW GRADE AND SLOPE WITHIN THE LIMITS OF CONSTRUCTION.
2. SAFETY. THE CONTRACTOR SHALL BE RESPONSIBLE FOR COMPLYING WITH THE PROVISIONS OF THE FLORIDA TRENCH SAFETY ACT, THE FLORIDA UNDERGROUND FACILITY DAMAGE PREVENTION AND SAFETY ACT, AND ALL APPLICABLE O.S.H.A. REQUIREMENTS. THE CONTRACTOR SHALL BE RESPONSIBLE FOR TAKING ALL NECESSARY PRECAUTIONS WHEN WORKING IN THE VICINITY OF OVERHEAD ELECTRIC LINES.
3. MAINTENANCE OF TRAFFIC. CONTRACTOR SHALL PROVIDE MAINTENANCE OF TRAFFIC (MOT) PLANS, PREPARED BY A WORK SITE TRAFFIC SUPERVISOR AS CERTIFIED BY THE AMERICAN TRAFFIC SAFETY SERVICES ASSOCIATION, PRIOR TO COMMENCING CONSTRUCTION WITHIN CITY OF LAKE WORTH RIGHT-OF-WAY.
4. ACCESS. THE CONTRACTOR SHALL BE RESPONSIBLE FOR MAINTAINING SAFE VEHICULAR AND PEDESTRIAN ACCESS AT ALL TIMES.
5. WARRANTY. ALL WORK, MATERIALS, OR EQUIPMENT SHALL BE WARRANTIED FOR A MINIMUM OF ONE YEAR, FROM THE DATE OF FINAL ACCEPTANCE BY THE CITY OF LAKE WORTH, AGAINST DEFECTIVE MATERIALS AND/OR WORKMANSHIP. ALL WORK FOUND TO BE DEFECTIVE WILL BE REPLACED BY THE CONTRACTOR AT NO EXPENSE TO THE CITY OF LAKE WORTH.
6. SHOP DRAWINGS. THE CONTRACTOR SHALL PROVIDE A MINIMUM OF SEVEN (7) COPIES (OR MORE, IF REQUIRED) OF SHOP DRAWINGS, PRODUCT DATA, MATERIAL SPECIFICATIONS AND OTHER INFORMATION REGARDING CONSTRUCTION MATERIALS AND STRUCTURES AS REQUESTED BY THE ENGINEER OF RECORD OR THE CITY OF LAKE WORTH. SHOP DRAWINGS MUST BE NEWLY PREPARED INFORMATION, DRAWN TO ACCURATE SCALE. STANDARD INFORMATION PREPARED WITHOUT SPECIFIC REFERENCE TO THE PROJECT WILL BE RETURNED TO THE CONTRACTOR WITHOUT REVIEW. SHOP DRAWINGS SHALL BE SUBJECT TO THE FOLLOWING:
   A. BY SUBMITTAL OF ANY SHOP DRAWING OR CATALOG DATA, BEARING AN APPROVAL STAMP, THE CONTRACTOR REPRESENTS THAT IT HAS DETERMINED AND VERIFIED ALL FIELD MEASUREMENTS, FIELD CONSTRUCTION CRITERIA, MATERIALS, DIMENSIONS, CATALOG NUMBERS AND SIMILAR DATA, OR WILL DO SO, AND THAT IT HAS CHECKED AND COORDINATED EACH ITEM WITH OTHER APPLICABLE APPROVED SHOP DRAWINGS AND THE CONTRACT REQUIREMENTS.
   B. SHOP DRAWINGS AND CATALOG DATA SUBMITTED WITHOUT THE CONTRACTOR'S STAMP OF APPROVAL WILL BE RETURNED TO THE CONTRACTOR WITHOUT REVIEW. APPROVAL OF SHOP DRAWINGS, SAMPLES, OR CATALOG DATA BY THE ENGINEER OF RECORD OR THE CITY OF LAKE WORTH SHALL NOT AUTHORIZE ANY DEVIATION FROM THE REQUIREMENTS OF THE CONTRACT DOCUMENTS.
   C. ANY PROPOSED SUBSTITUTE OR EQUAL TO THE THAT SHOWN ON THE CONTRACT DOCUMENTS SHALL BE ACCOMPANIED BY CALCULATIONS SUBSTANTIATING EQUIVALENCY. SHOP DRAWINGS WITH SUBSTITUTE MATERIALS NOT ACCOMPANIED BY CALCULATIONS WILL BE RETURNED WITHOUT REVIEW.
   D. THE CONTRACTOR SHALL CONFIRM COMPATIBILITY OF PIPE SLOPES AND INVERTS DURING THE SHOP DRAWING AND MATERIALS ORDERING PHASE OF THE PROJECT AND ADVISE THE ENGINEER OF RECORD IN WRITING OF ANY DISCREPANCIES.
   E. INDIVIDUAL SHOP DRAWINGS FOR ALL PRECAST STRUCTURES ARE REQUIRED. CATALOG LITERATURE WILL NOT BE ACCEPTED FOR PRECAST STRUCTURES.
7. FIELD REVIEWS. THE CONTRACTOR SHALL PROVIDE NOTIFICATION, 48 HOURS (MIN.), PRIOR TO ANY REQUIRED FIELD REVIEWS OR INSPECTIONS AND SHALL SUPPLY ALL NECESSARY EQUIPMENT, LABOR, AND MATERIALS FOR INSPECTION AND/OR TEST. ALL WORK SHALL BE OPEN AND SUBJECT TO REVIEW AND/OR INSPECTION BY AUTHORIZED PERSONNEL OF THE CITY OF LAKE WORTH AND THE ENGINEER OF RECORD.
13. DENSITY TESTING. THE CONTRACTOR SHALL BE RESPONSIBLE FOR OBTAINING ALL NECESSARY TESTING TO ENSURE THAT THE PROPER COMPACTION HAS BEEN ACHIEVED FOR ALL SUBGRADE, BASE MATERIAL, PIPE BASE MATERIAL, BACKFILL, & ALL OTHER AREAS WHERE COMPACTION REQUIREMENTS ARE SPECIFIED. ALL TEST RESULTS SHALL BE SIGNED & SEALED BY A FLORIDA LICENSED PROFESSIONAL ENGINEER AND COPIES SHALL BE PROVIDED TO THE ENGINEER OF RECORD AND THE CITY OF LAKE WORTH.
14. PERMITS. THE CONTRACTOR SHALL NOT COMMENCE CONSTRUCTION PRIOR TO RECEIPT OF ALL APPLICABLE PERMITS AND APPROVALS INCLUDING AN APPROVED MAINTENANCE OF TRAFFIC PLAN. THE CONTRACTOR SHALL ABIDE BY ALL APPLICABLE REQUIREMENTS OF THE PERMITS AND AGENCY APPROVALS.
15. EROSION CONTROL. ALL EROSION CONTROL MEASURES SHALL BE INSTALLED IN ACCORDANCE WITH FDOT INDICES 102, 103 AND 106, THE FDEP NATIONAL POLLUTANT DISCHARGE ELIMINATION SYSTEM (NPDES) GENERAL PERMIT (IF APPLICABLE), AND THE STORMWATER POLLUTION PREVENTION PLAN (SWPPP). FILTER FABRIC, HAY BALES, OR ROCK BAGS SHALL BE INSTALLED IN EACH INLET THROUGHOUT THE CONSTRUCTION PERIOD. A SOIL TRACKING PREVENTION DEVICE (STPD) SHALL CONSTRUCTED AT ALL UNSTABILIZED CONSTRUCTION ACCESS POINTS, PER FDOT INDEX NO. 106.
16. STORM DRAINAGE. ALL STORM DRAINAGE PIPE JOINTS SHALL BE WRAPPED IN FILTER FABRIC PER FDOT STANDARD INDEX NO. 280. ALL DRAINAGE STRUCTURES SHALL CONFORM TO THE REQUIREMENTS OF FDOT STANDARD SPECIFICATIONS FOR ROAD AND BRIDGE CONSTRUCTION, LATEST EDITION. ALL GRATES SHALL BE SECURED TO THE STRUCTURES WITH AN EYEBOLT AND CHAIN. ALL STORM DRAINAGE SHALL BE FREE OF SILT AND SEDIMENT AT THE TIME OF FINAL ACCEPTANCE BY THE CITY OF LAKE WORTH.
17. DEWATERING. THE CONTRACTOR SHALL BE RESPONSIBLE FOR OBTAINING AND COMPLYING WITH ANY DEWATERING PERMITS AND/OR APPROVALS NECESSARY FOR CONSTRUCTION. NO WATER FROM DEWATERING MEASURES SHALL BE DISCHARGED OFF-SITE. ALL DISCHARGE SHALL BE CONTAINED IN ON-SITE SEDIMENT BASINS.
18. SIDEWALKS. ALL SIDEWALKS SHALL BE CONSTRUCTED TO MEET THE REQUIREMENTS OF THE FLORIDA BUILDING CODE, CHAPTER 11 - FLORIDA ACCESSIBILITY CODE FOR BUILDING CONSTRUCTION. ALL CURB RAMPS SHALL BE CONSTRUCTED IN ACCORDANCE WITH FDOT STANDARD INDEX NO. 304 AND THE REQUIREMENTS OF THE FLORIDA BUILDING CODE. ALL WALKWAYS CROSSING VEHICULAR AREAS SHALL HAVE A DETECTABLE WARNING SURFACE (TRUNCATED DOMES) IN ACCORDANCE WITH FDOT STANDARD INDEX NO. 304 AND THE FLORIDA BUILDING CODE, CHAPTER 11 - ACCESSIBILITY CODE FOR BUILDING CONSTRUCTION. ALL SIDEWALKS SHALL BE BROOM FINISHED WITH AN EVEN, DUSTLESS SURFACE AND SHALL BE FREE OF CRACKS AT TIME OF FINAL ACCEPTANCE BY THE CITY OF LAKE WORTH.
19. PAVEMENT. WHERE FULL-DEPTH PAVEMENT REPLACEMENT IS SPECIFIED, EXISTING BASEROCK MAY NOT BE RE-USED, HOWEVER IT MAY BE UTILIZED AS SUBGRADE STABILIZATION MATERIAL. ALL SUBGRADE SHALL BE FREE OF MUCK, ROOTS, UNDERBRUSH, VEGETATIVE MATTER, GARBAGE, TRASH, OR ANY OTHER UNSUITABLE MATERIALS. BASEROCK AND ASPHALT SHALL BE PLACED IN MULTIPLE LIFTS AND SHALL BE PLACED IN ACCORDANCE WITH THE APPLICABLE FDOT STANDARD SPECIFICATIONS FOR ROAD AND BRIDGE CONSTRUCTION, LATEST EDITION. FINAL LIFT OF ASPHALT SHALL PROVIDE A UNIFORM FINISH AND SHALL BE PLACED TO CORRECT MINOR IMPERFECTIONS IN THE FIRST LIFT AND TO PROVIDE POSITIVE DRAINAGE FOR THE ROADWAY.
20. SIGNING AND PAVEMENT MARKING. ALL PAVEMENT MARKINGS WITHIN CITY OF LAKE WORTH RIGHT-OF-WAY SHALL BE THERMOPLASTIC. THERMOPLASTIC SHALL NOT BE INSTALLED ON PAVEMENT UNTIL A MINIMUM OF FIVE CALENDAR DAYS AFTER THE FINAL LIFT OF ASPHALT HAS BEEN COMPLETED. BLUE/BLUE REFLECTIVE PAVEMENT MARKERS (RPM) SHALL BE INSTALLED TO INDICATE THE LOCATION OF ALL FIRE HYDRANTS.

CITY OF LAKE WORTH PUBLIC SERVICES DEPARTMENT	GENERAL NOTES	DETAIL NO. 01 ISSUED: 09/09/13

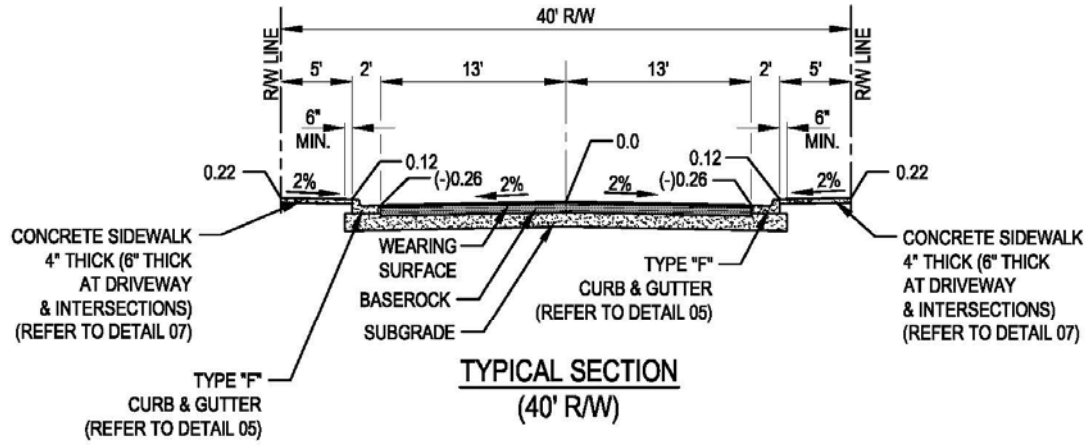

TYPICAL SECTION
(40' R/W)

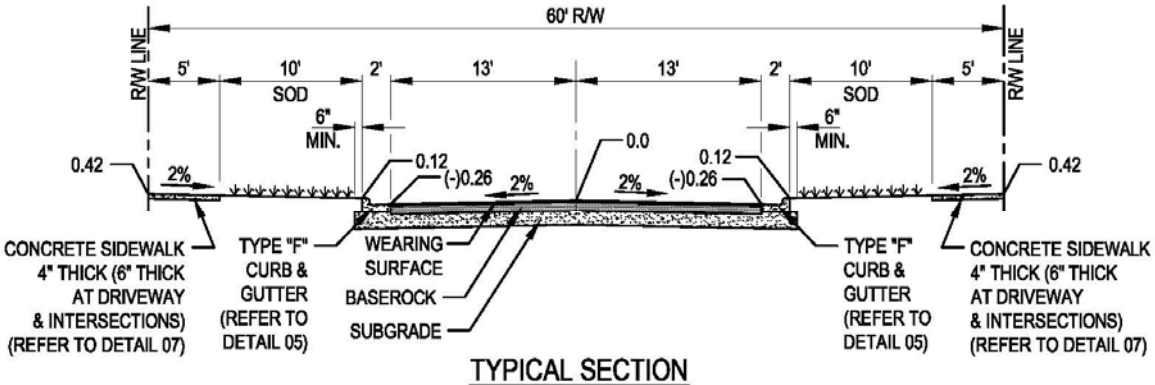

TYPICAL SECTION
(60' R/W)

PAVEMENT SPECIFICATIONS	
WEARING SURFACE	1 1/2" TYPE S-III (TWO 3/4" LIFTS)
BASE	8" BASEROCK (LBR 100) COMPACTED TO 98% MAX. DENSITY PER AASHTO T-180. (2 EQUAL LIFTS) **OR** 10" CRUSHED CONC. PRIME & TACK COAT PER FDOT SECTION 300.
SUBGRADE	12" STABILIZED SUBGRADE COMPACTED TO 98% MAX. DENSITY PER AASHTO T-180.

VARIATION FROM MATERIAL SPECIFICATIONS WILL BE CONSIDERED ON A CASE BY CASE BASIS BY THE CITY ENGINEER.

CITY OF LAKE WORTH PUBLIC SERVICES DEPARTMENT	TYPICAL RIGHT-OF-WAY SECTIONS	DETAIL NO. 02

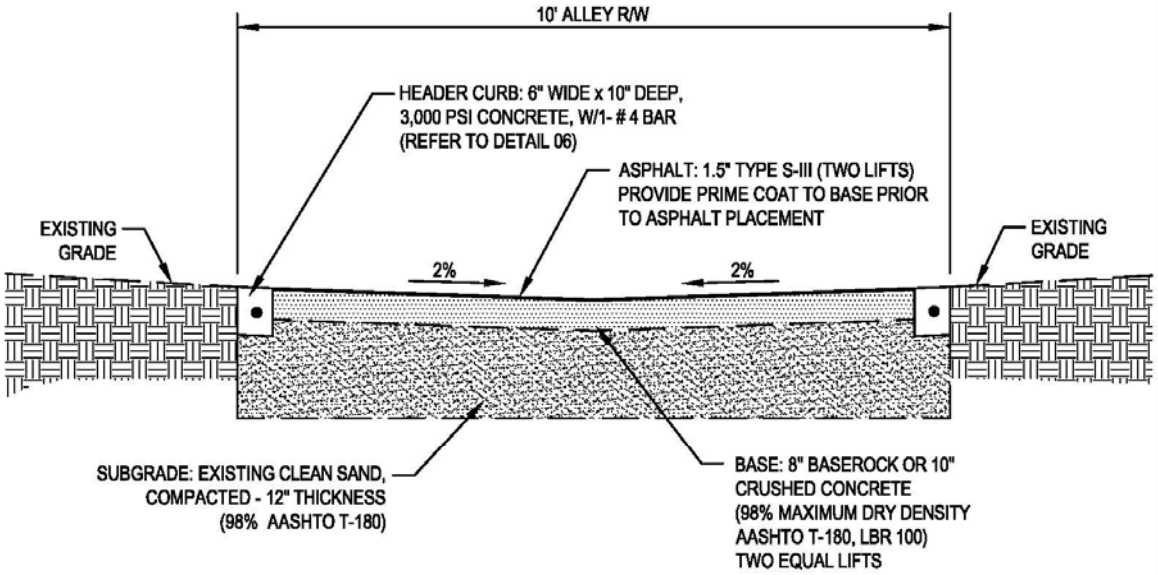

ALLEY PAVEMENT SECTION

NOTE: MINIMUM 0.50% LONGITUDINAL SLOPE REQUIRED.

CITY OF LAKE WORTH PUBLIC SERVICES DEPARTMENT	ALLEY PAVEMENT SECTION	DETAIL NO. 03 ISSUED: 09/10/13

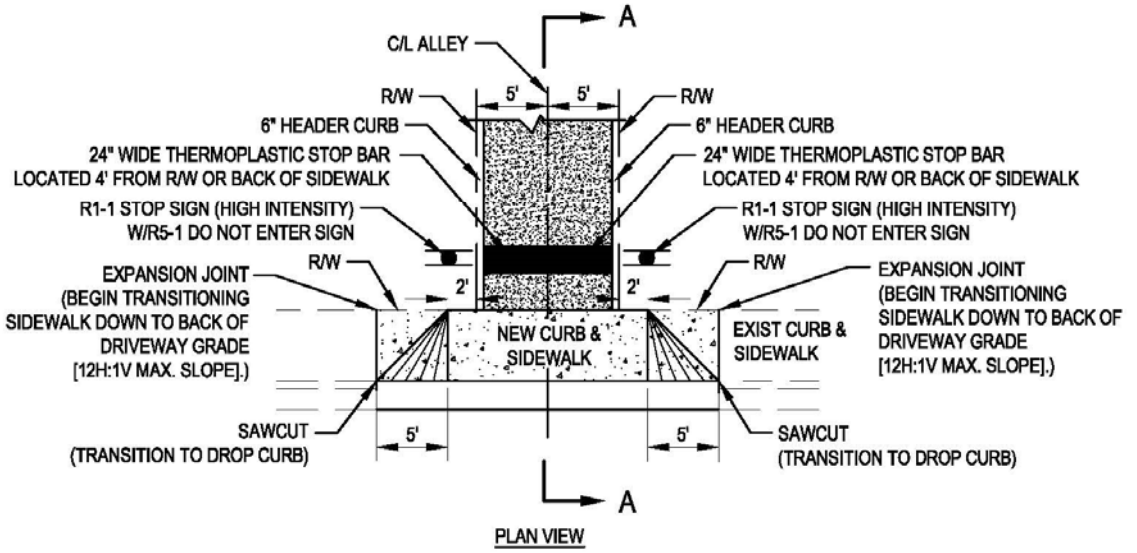

PLAN VIEW

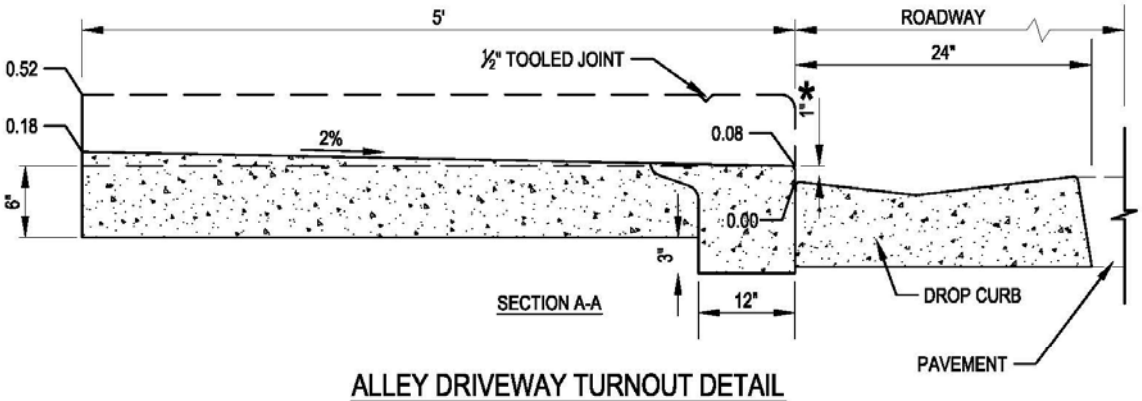

ALLEY DRIVEWAY TURNOUT DETAIL

* NOTE:
EDGE OF DRIVEWAY TO BE 1" ABOVE ROADWAY EDGE OF PAVEMENT GRADE.

CITY OF LAKE WORTH PUBLIC SERVICES DEPARTMENT	ALLEY AND DRIVEWAY TURNOUTS	DETAIL NO. 04 ISSUED: 09/10/13

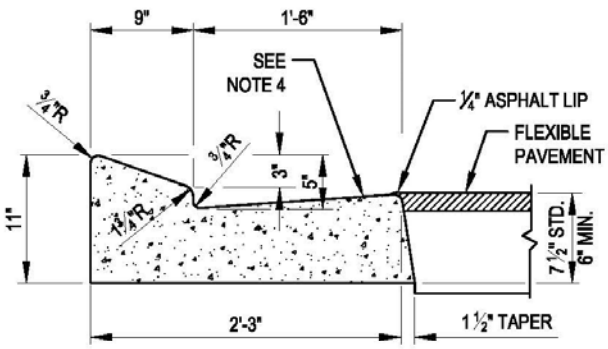

TYPE E

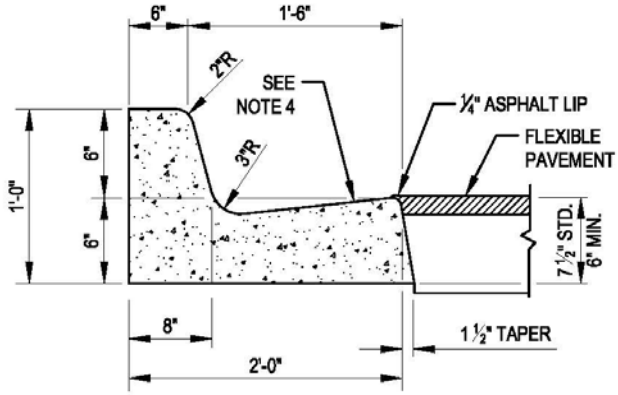

TYPE F

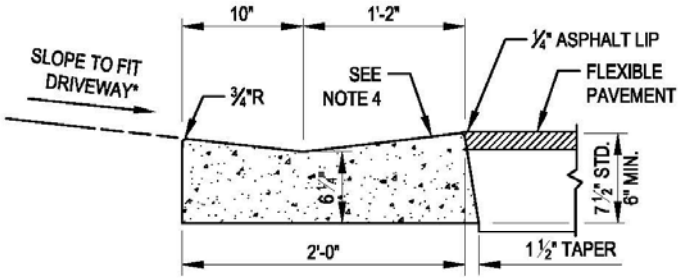

*NOTE: 2% MAX. SLOPE FOR PEDESTRIAN PATHWAYS; 12% MAX. SLOPE FOR DRIVEWAYS

VALLEY GUTTER
(DROP CURB)

NOTES:

1. ULTIMATE STRENGTH OF CONCRETE FOR CURBS AND GUTTERS SHALL BE 3,000 P.S.I. @ 28 DAYS.
2. 1/8"-1/4" CONTRACTION JOINTS IN CURB AND GUTTER SHALL BE CUT AS SHOWN AND AT 10 FT. MAXIMUM SPACING. NO SECTION SHALL BE LESS THAN 4 FT.
3. WHEN PAVEMENT IS CONCRETE, PROVIDE A 1/2" EXPANSION JOINT WITH PRE-FORMED JOINT FILLER & JOINT SEAL BETWEEN CURB AND CONCRETE PAVEMENT. (1-1/2" TAPER ON CURB FACE NOT REQUIRED AT CONCRETE PAVEMENT.)
4. WHEN USED ON HIGH EDGE OF PAVEMENT, THE CROSS SLOPE OF TYPES "E", "F", AND VALLEY GUTTER SHALL MATCH THE CROSS SLOPE OF THE ADJACENT EDGE OF PAVEMENT. THE THICKNESS OF THE LIP SHALL BE 6" MINIMUM UNLESS OTHERWISE SHOWN ON PLANS. THE SURFACE ON THE LOW EDGE OF PAVEMENT TO BE 1/4" ABOVE LIP OF GUTTER. SURFACE ON HIGH EDGE OF PAVEMENT TO BE FLUSH WITH LIP OF CURB AND GUTTER. IF BOTH EDGES ARE AT SAME ELEVATION, SURFACE SHALL BE FLUSH.
5. ENDS OF TYPE "E" & "F" CURBING SHALL TRANSITION FROM FULL HEIGHT TO FLUSH IN 3 FEET.
6. THE MINIMUM CONSTRUCTED FLOW-LINE GRADIENT FOR STREET DRAINAGE UTILIZING CURB & GUTTER OR VALLEY GUTTER SHALL BE 0.20%.
7. REFER TO FDOT INDEX 300 FOR ADDITIONAL INFORMATION.
8. CONCRETE CURBING SHALL BE CONSTRUCTED ON A 4" THICK BASEROCK CURB PAD

CITY OF LAKE WORTH PUBLIC SERVICES DEPARTMENT	CONCRETE CURB AND GUTTER	DETAIL NO. 05 ISSUED: 09/10/13

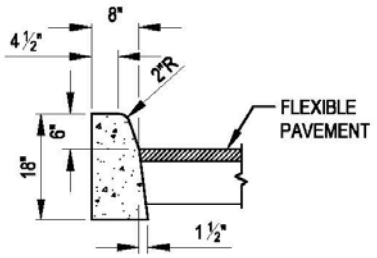

TYPE D

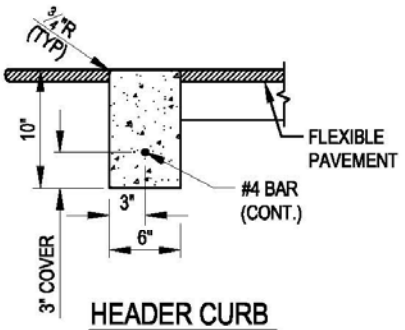

HEADER CURB

NOTES:

1. ULTIMATE STRENGTH OF CONCRETE FOR CURBS SHALL BE 3,000 P.S.I. @ 28 DAYS.
2. 1/8" -1/4" CONTRACTION JOINTS IN CURBS SHALL BE 3 1/2" MIN. DEPTH (AS MEASURED FROM TOP OF ADJACENT PAVEMENT) AND AT 10-FOOT CENTERS. NO SECTION SHALL BE LESS THAN 4 FEET.
3. WHEN PAVEMENT IS CONCRETE, PROVIDE A 1/2" EXPANSION JOINT WITH PRE-FORMED JOINT FILLER & JOINT SEAL BETWEEN CURB AND CONCRETE PAVEMENT. (1-1/2" TAPER ON CURB FACE NOT REQUIRED AT CONCRETE PAVEMENT.)
4. ENDS OF ALL CURBING SHALL TRANSITION FROM FULL HEIGHT TO FLUSH IN 3 FEET.
5. THE MINIMUM CONSTRUCTED FLOW-LINE GRADIENT FOR STREET DRAINAGE UTILIZING CURB & GUTTER OR VALLEY GUTTER SHALL BE 0.20%.
6. REFER TO FDOT INDEX 300 FOR ADDITIONAL INFORMATION.

CITY OF LAKE WORTH PUBLIC SERVICES DEPARTMENT	CONCRETE CURB	DETAIL NO. 06 ISSUED: 09/10/13

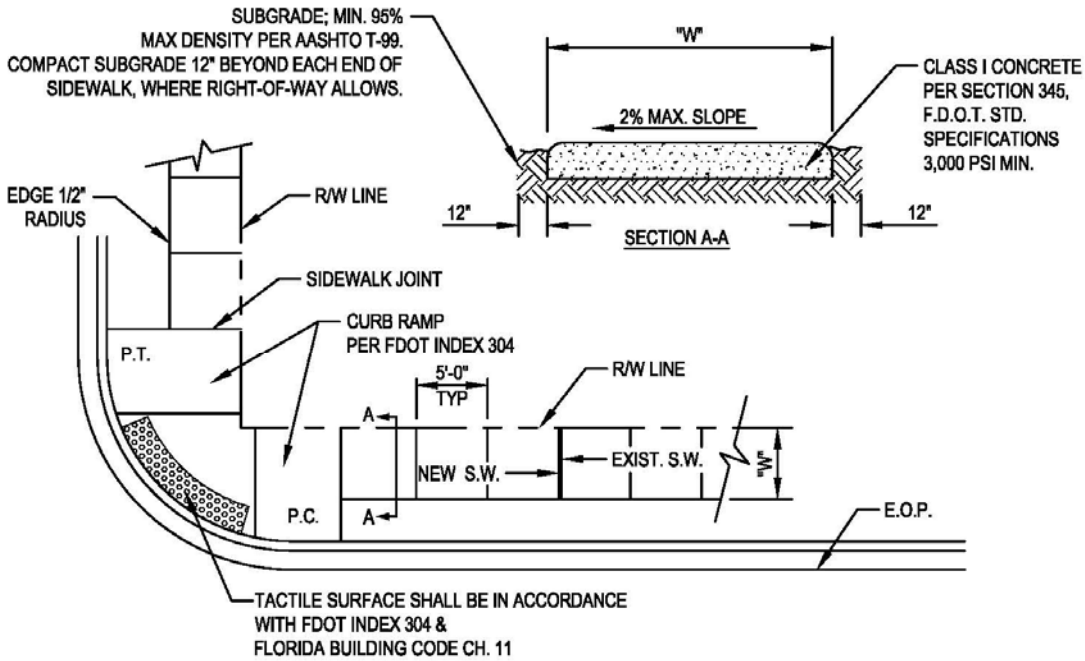

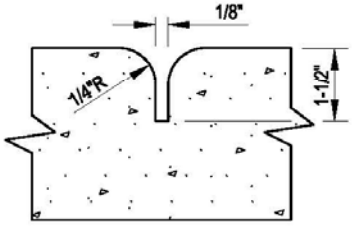

NOTE:

1. ALL SIDEWALKS SHALL BE CONSTRUCTED THROUGH DRIVEWAYS.
2. ALL SIDEWALKS SHALL INCLUDE ADA COMPLIANT RAMPS @ INTERSECTIONS.
3. CONCRETE SHALL BE BROOM FINISHED WITH EVEN DUSTLESS SURFACE.

TABLE OF SIDEWALK THICKNESS - "T"	
RESIDENTIAL AREAS	4"
WITHIN 10' OF CROSS-STREETS, AT DRIVEWAYS & OTHER AREAS	6"
TABLE OF SIDEWALK WIDTHS - "W"	
STANDARD WIDTH	5'
OTHER AREAS AS SPECIFIED BY THE CITY ENGINEER.	

CONCRETE WALK CONSTRUCTION

CITY OF LAKE WORTH PUBLIC SERVICES DEPARTMENT	CONCRETE WALK	DETAIL NO. 07 ISSUED: 09/10/13

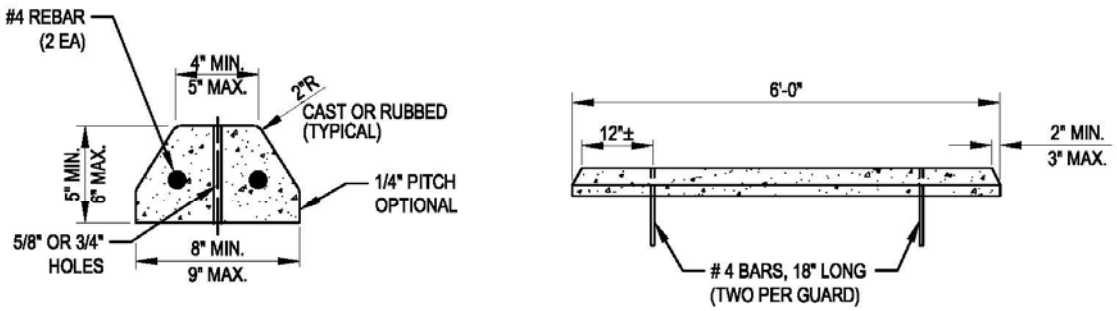

CONCRETE BUMPER GUARD

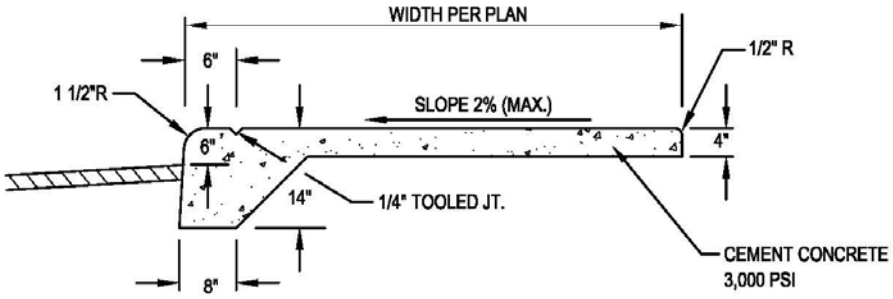

MONOLITHIC CURB AND WALK DETAIL

TO BE USED IN PARKING AREAS & WHERE TYPE "F" CURB & GUTTER IS NOT REQUIRED.

N.T.S.

CITY OF LAKE WORTH PUBLIC SERVICES DEPARTMENT	CONCRETE BUMPER GUARD AND MONOLITHIC CURB AND WALK	DETAIL NO. 08 ISSUED: 6/19/13

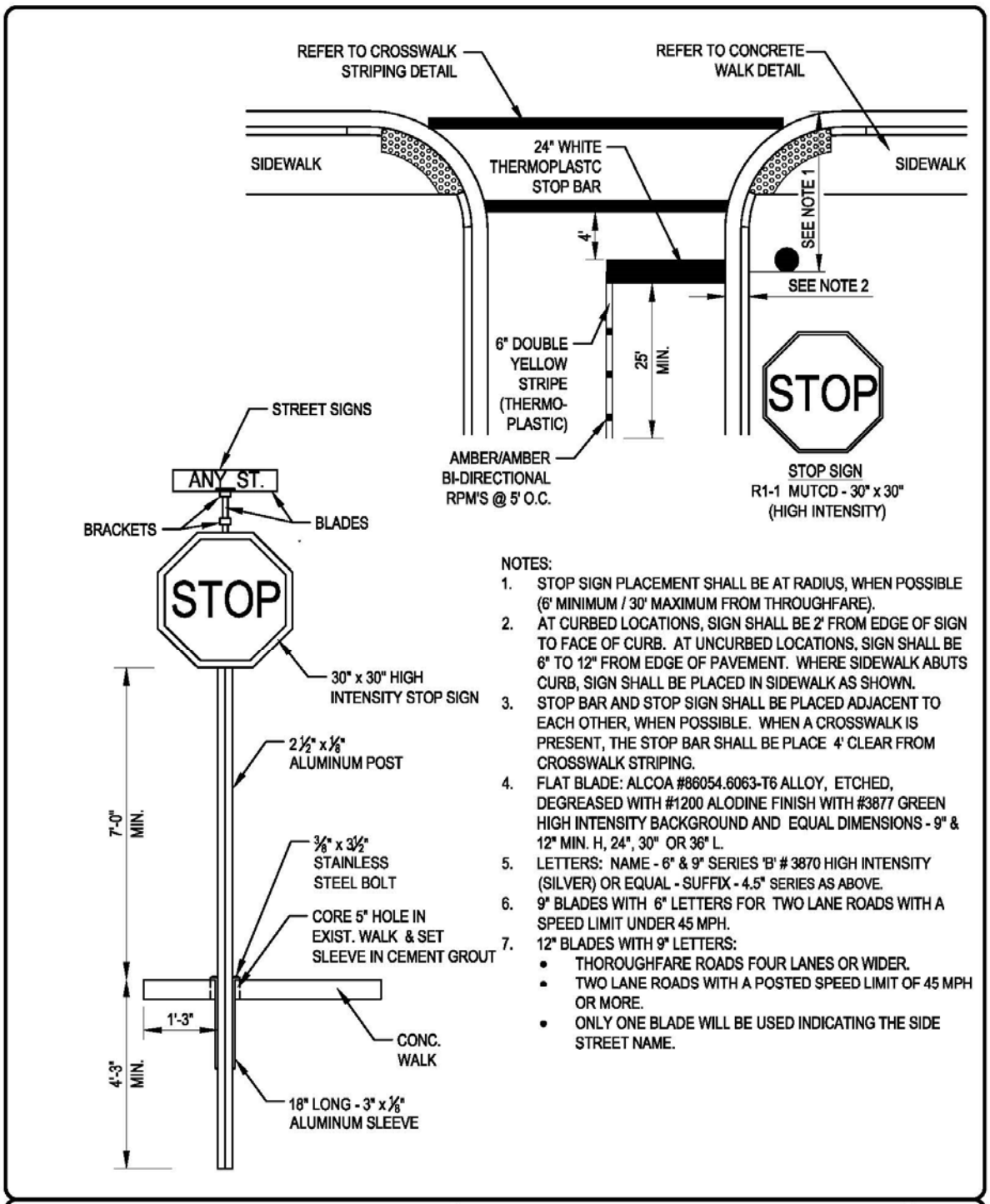

NOTES:

1. STOP SIGN PLACEMENT SHALL BE AT RADIUS, WHEN POSSIBLE (6' MINIMUM / 30' MAXIMUM FROM THROUGHFARE).
2. AT CURBED LOCATIONS, SIGN SHALL BE 2' FROM EDGE OF SIGN TO FACE OF CURB. AT UNCURBED LOCATIONS, SIGN SHALL BE 6" TO 12" FROM EDGE OF PAVEMENT. WHERE SIDEWALK ABUTS CURB, SIGN SHALL BE PLACED IN SIDEWALK AS SHOWN.
3. STOP BAR AND STOP SIGN SHALL BE PLACED ADJACENT TO EACH OTHER, WHEN POSSIBLE. WHEN A CROSSWALK IS PRESENT, THE STOP BAR SHALL BE PLACE 4' CLEAR FROM CROSSWALK STRIPING.
4. FLAT BLADE: ALCOA #86054.6063-T6 ALLOY, ETCHED, DEGREASED WITH #1200 ALODINE FINISH WITH #3877 GREEN HIGH INTENSITY BACKGROUND AND EQUAL DIMENSIONS - 9" & 12" MIN. H, 24", 30" OR 36" L.
5. LETTERS: NAME - 6" & 9" SERIES 'B' # 3870 HIGH INTENSITY (SILVER) OR EQUAL - SUFFIX - 4.5" SERIES AS ABOVE.
6. 9" BLADES WITH 6" LETTERS FOR TWO LANE ROADS WITH A SPEED LIMIT UNDER 45 MPH.
7. 12" BLADES WITH 9" LETTERS:
   - THOROUGHFARE ROADS FOUR LANES OR WIDER.
   - TWO LANE ROADS WITH A POSTED SPEED LIMIT OF 45 MPH OR MORE.
   - ONLY ONE BLADE WILL BE USED INDICATING THE SIDE STREET NAME.

CITY OF LAKE WORTH PUBLIC SERVICES DEPARTMENT	STOP SIGN AND STOP BAR	DETAIL NO. 09

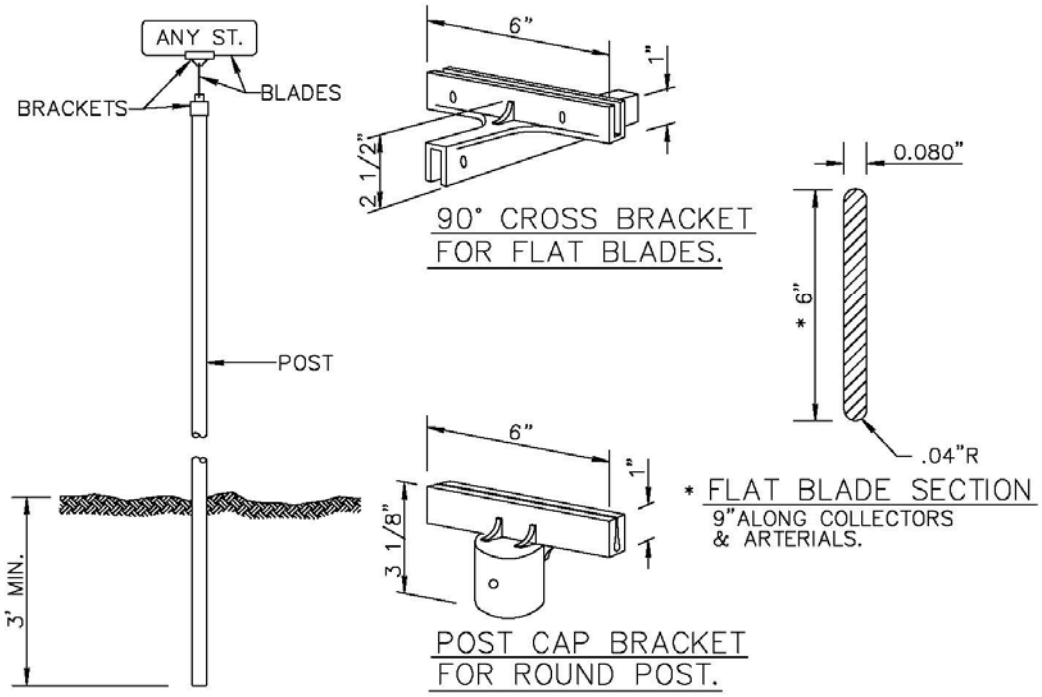

GENERAL SPECIFICATIONS:

* BLADE: ALCOA NO.86054,6063–T6 ALLOY, ETCHED, DEGREASED, AND DEBURRED WITH NO.1200 ALDOLINE FINISH WITH HIGH INTENSITY GREEN BACKGROUND DIMENSIONS: 6" OR 9" IN HEIGHT, AND 24", 30", OR 36" IN LENGTH

* LETTERS: NAME 4" SERIES "B" HIGH INTENSITY (SILVER)
SUFFIX 2" SERIES "B" HIGH INTENSITY (SILVER)
ALL LETTERS FOR SIGNS ALONG COLLECTOR OR ARTERIAL ROADWAYS SHALL BE 7" SERIES "B" WITH 4" SERIES "B" SUFFIX ON 9" HIGH BLADES.

* POST: STEEL FLANGED GALVANIZED CHANNEL.
PER A.S.T.M. A123 WITHOUT ANCHOR PLATES.

* BRACKETS: DIE CAST HIGH STRENGTH ALUMINUM ALLOY, MIN. TENSILE STRENGTH 45,000 P.S.I., DEGREASED, TUMBLED, AND POLISHED SIDES OF ALL SLOTS SHALL BE SOLID METAL WITH TWO HOLES PER SLOT (SAME SIDE) DRILLED TO 7/32" AND TAPPED TO 1/4" TO RECEIVE STAINLESS STEEL ALLENHEAD SET SCREWS, SKIRT OF POST CAP BRACKET TO BE DRILLED AND TAPPED FOR 3 SCREWS OF WHICH NO TWO IS TO BE LESS THAN 90° OR MORE THAN 135° APART. (METRO HUSKEY NO.6 OR EQUAL.)

STREET SIGN DETAIL RT 2.1a

CITY OF LAKE WORTH PUBLIC SERVICES DEPARTMENT	STREET SIGN DETAIL	DETAIL NO. 10 ISSUED: 09/9/13

TYPICAL SIGN. PLAN SYMBOL :

M.U.T.C.D. DESIGNATION : W1-3R *

* SIGN SIZE TO BE NOTED IF OTHER THAN STANDARD.

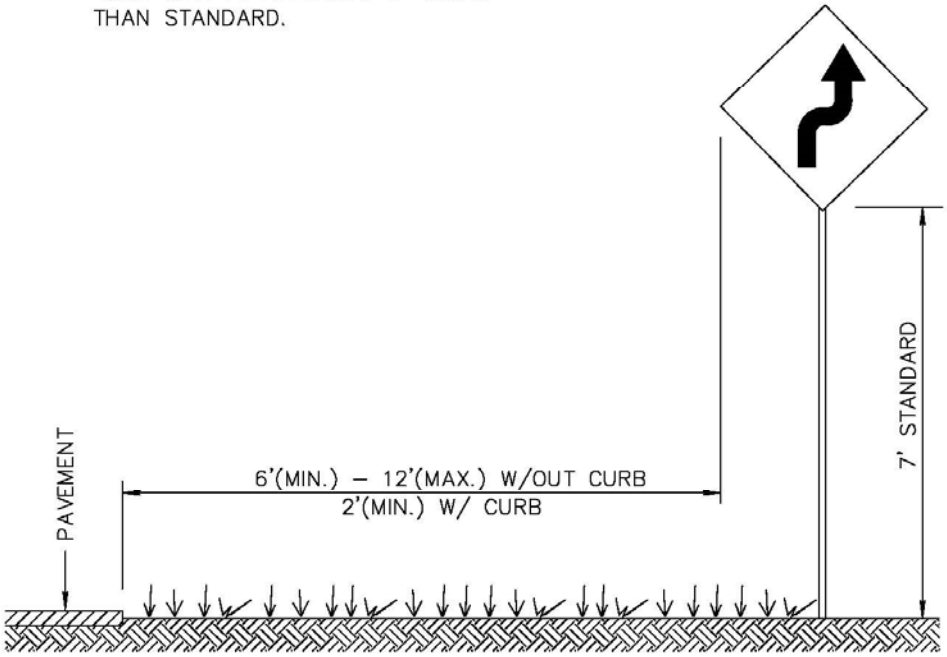

NOTES:

1. ALL SIGNS SHALL BE SPECIFIED USING THE M.U.T.C.D. DESIGNATION.
2. ALL SIGNS SHALL BE FACED WITH HIGH INTENSITY SHEETING MATERIAL OR BETTER.
3. SIGNS SHALL BE MANUFACTURED WITH 0.080" ALUMINUM BLANK.
4. POSTS SHALL BE GALVANIZED CHANNEL AT 2 LBS/L.F.
5. USE SHALL FOLLOW THE M.U.T.C.D. AND F.D.O.T. STANDARD DESIGN SPECIFICATIONS
6. ANY DEVIATION FROM THIS TYPICAL SHALL BE APPROVED BY THE CITY ENGINEER PRIOR TO INSTALLATION.
7. REFLECTIVE POSTS MAY BE USED IF M.U.T.C.D. STANDARD IS FOLLOWED.

CITY OF LAKE WORTH PUBLIC SERVICES DEPARTMENT	STREET SIGN DETAIL	DETAIL NO. 11 ISSUED: 05/15/13

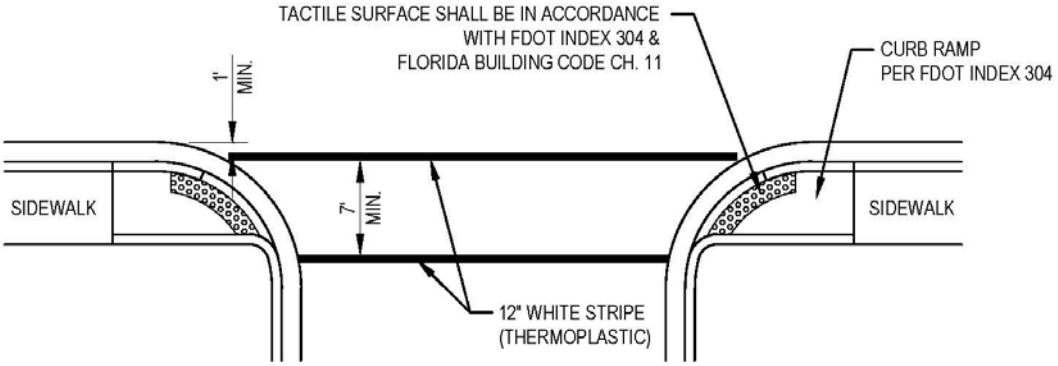

- STANDARD CROSSWALK STRIPING TO BE INSTALLED IN THE FOLLOWING LOCATIONS:
  - ALONG COLLECTORS OR ARTERIALS
  - BIKE PATH CROSSINGS
  - CROSS WALKS WITH HIGH EXPECTED PEDESTRIAN VOLUME
  - SCHOOL ACCESS ROUTES
- SIGNING REQUIRED AS PER FDOT STANDARDS

STANDARD CROSSWALK

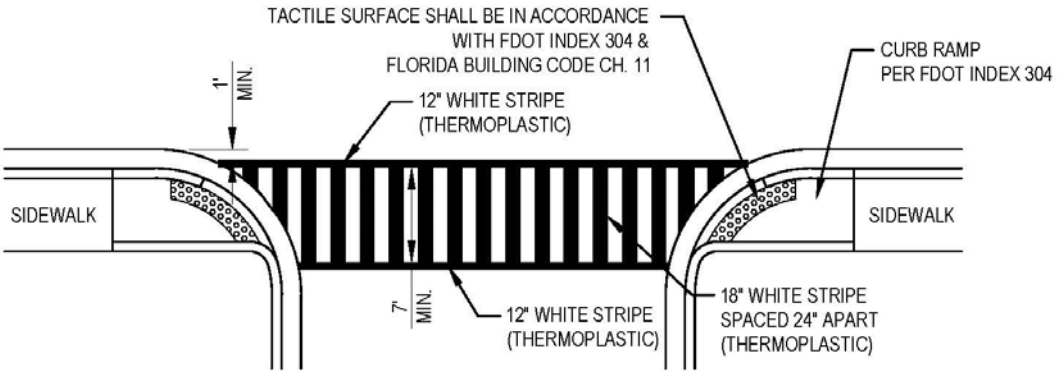

- SCHOOL CROSSWALK STRIPING TO BE USED ONLY AT DESIGNATED SUPERVISED SCHOOL CROSSING
- SIGNS AND ADVANCED PAVEMENT MESSAGES TO BE DESIGNED AND INSTALLED PER FDOT STANDARDS.

SCHOOL CROSSWALK

CITY OF LAKE WORTH PUBLIC SERVICES DEPARTMENT	CROSSWALK STRIPING	DETAIL NO. 12 ISSUED: 05/10/13

PAVEMENT MARKING SPECIFICATIONS

All Pavement markings to be installed per these typicals, plans and specifications, and as directed by the City Engineer and shall conform to the requirements of F.D.O.T. and the manual on uniform traffic control devices, (MUTCD).

PERMANENT MARKINGS

Installation:

- All markings shall be installed by the extruded method.
- Markings shall be free of weaves, bows, drips, drags, and other degrading items.
- Chalk shall be used for all layout markings

Materials:

- All materials shall be alkyd or hydrocarbon thermoplastic meeting all FDOT specifications.

Thickness:

- All markings shall be installed to yield 90 mils of material measured above the pavement surface.

Spheres:

- Reflective glass sheres are to be applied to all stripes and markings per FDOT specifications.

Alternate Material:

- STAYMARK marking tape, or equivalent may be used, as approved or directed by the City Engineer.

Layout:

- Layout shall be made using marking chalk.
- It is recommended that marking layout be inspected by the City Engineer prior to the placement of final markings.

TEMPORARY MARKINGS

Temporary markings may be used only as specified in this section, or as approved or directed by the City Engineer.

Final Pavement Surface:

- Only foil backed marking tape is allowed.
- All tape shall be totally removed concurrent with permanent marking placement.

Other Pavement Surfaces:

- Intermediate pavement surfaces may be marked with FDOT approved materials, designs, and specifications.

CITY OF LAKE WORTH PUBLIC SERVICES DEPARTMENT	PAVEMENT MARKING SPECIFICATIONS	DETAIL NO. 13 ISSUED: 05/15/13

ALL PAVEMENT MARKINGS

All paved surfaces shall be properly marked prior to the hours of darkness.

RAISED PAVEMENT MARKERS

- R.P.M.s shall be installed on all lane lines and centerlines, spaced at 20' or 40'.
- R.P.M.s shall be a 4 x 4 type class "B" marker meeting F.D.O.T. specifications and shall be approved by the City Engineer prior to use.
- R.P.M.'s shall be installed using alkyd thermoplastic on asphalt and epoxy on concrete.

OTHER NOTES

- All Materials within right-of-way shall be thermoplastic and per F.D.O.T. specifications.
- Pavement marking within private parking lots may be painted according to F.D.O.T. specifications, except for all stop bars adjacent to public rifgt-of-way.

CITY OF LAKE WORTH PUBLIC SERVICES DEPARTMENT	PAVEMENT MARKING SPECIFICATIONS	DETAIL NO. 14 ISSUED: 09/18/13

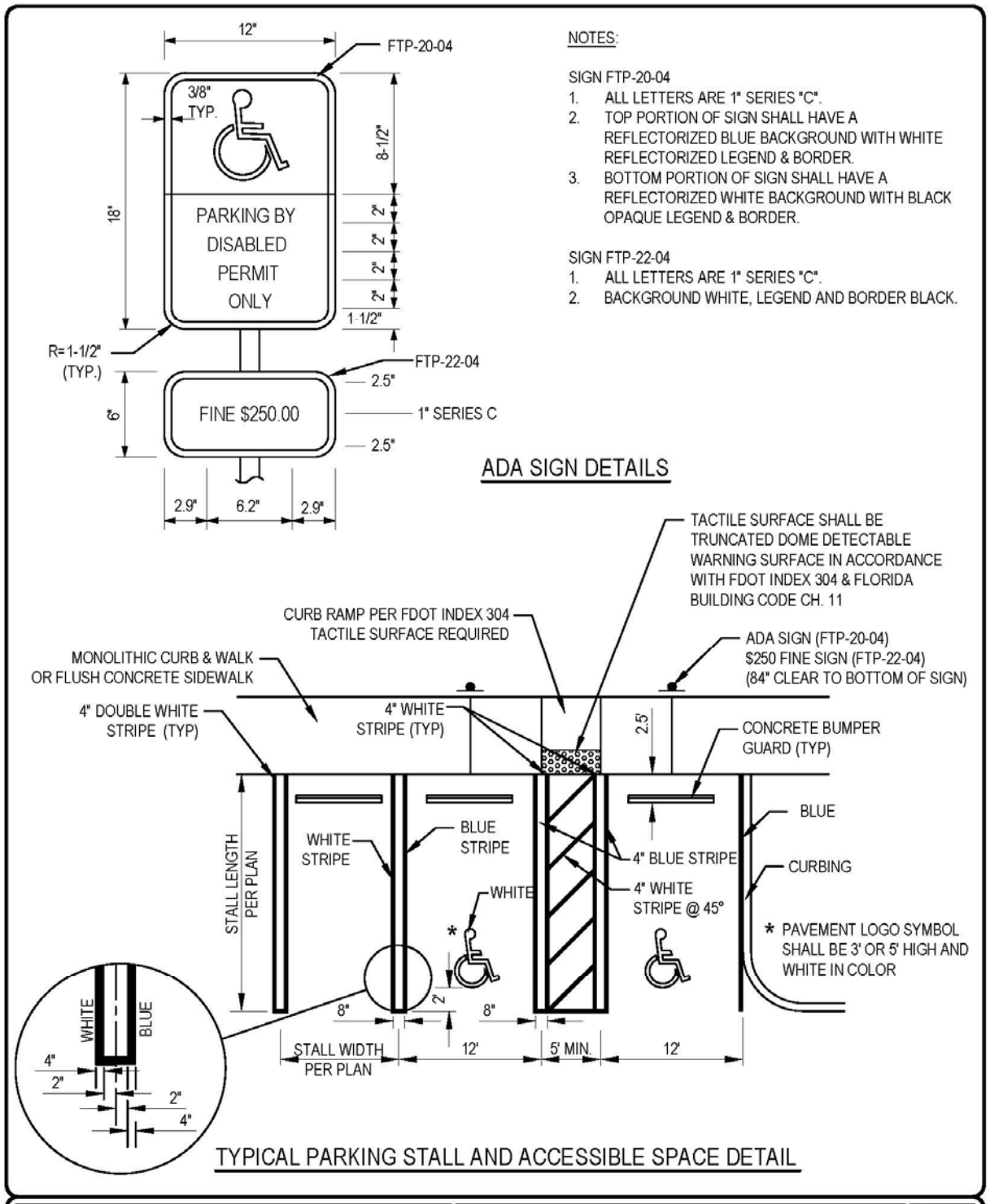
12"
FTP-20-04
3/8" TYP.
8-1/2"
18"
PARKING BY DISABLED PERMIT ONLY
2"
2"
2"
2"
1-1/2"
R=1-1/2" (TYP.)
FTP-22-04
2.5"
6"
FINE $250.00
1" SERIES C
2.5"
2.9"
6.2"
2.9"
NOTES:
SIGN FTP-20-04
1. ALL LETTERS ARE 1" SERIES "C".
2. TOP PORTION OF SIGN SHALL HAVE A REFLECTORIZED BLUE BACKGROUND WITH WHITE REFLECTORIZED LEGEND & BORDER.
3. BOTTOM PORTION OF SIGN SHALL HAVE A REFLECTORIZED WHITE BACKGROUND WITH BLACK OPAQUE LEGEND & BORDER.
SIGN FTP-22-04
1. ALL LETTERS ARE 1" SERIES "C".
2. BACKGROUND WHITE, LEGEND AND BORDER BLACK.
ADA SIGN DETAILS
TACTILE SURFACE SHALL BE TRUNCATED DOME DETECTABLE WARNING SURFACE IN ACCORDANCE WITH FDOT INDEX 304 & FLORIDA BUILDING CODE CH. 11
CURB RAMP PER FDOT INDEX 304 TACTILE SURFACE REQUIRED
ADA SIGN (FTP-20-04) $250 FINE SIGN (FTP-22-04) (84" CLEAR TO BOTTOM OF SIGN)
MONOLITHIC CURB & WALK OR FLUSH CONCRETE SIDEWALK
4" DOUBLE WHITE STRIPE (TYP)
4" WHITE STRIPE (TYP)
2.5'
CONCRETE BUMPER GUARD (TYP)
BLUE
STALL LENGTH PER PLAN
WHITE STRIPE
BLUE STRIPE
4" BLUE STRIPE
CURBING
WHITE
4" WHITE STRIPE @ 45°
* PAVEMENT LOGO SYMBOL SHALL BE 3' OR 5' HIGH AND WHITE IN COLOR
WHITE
BLUE
4"
2"
2"
4"
8"
2'
8"
STALL WIDTH PER PLAN
12'
5' MIN.
12'
TYPICAL PARKING STALL AND ACCESSIBLE SPACE DETAIL
CITY OF LAKE WORTH PUBLIC SERVICES DEPARTMENT
ACCESSIBLE PARKING SIGNAGE AND PAVEMENT MARKINGS
DETAIL NO.
15
ISSUED: 05/10/13

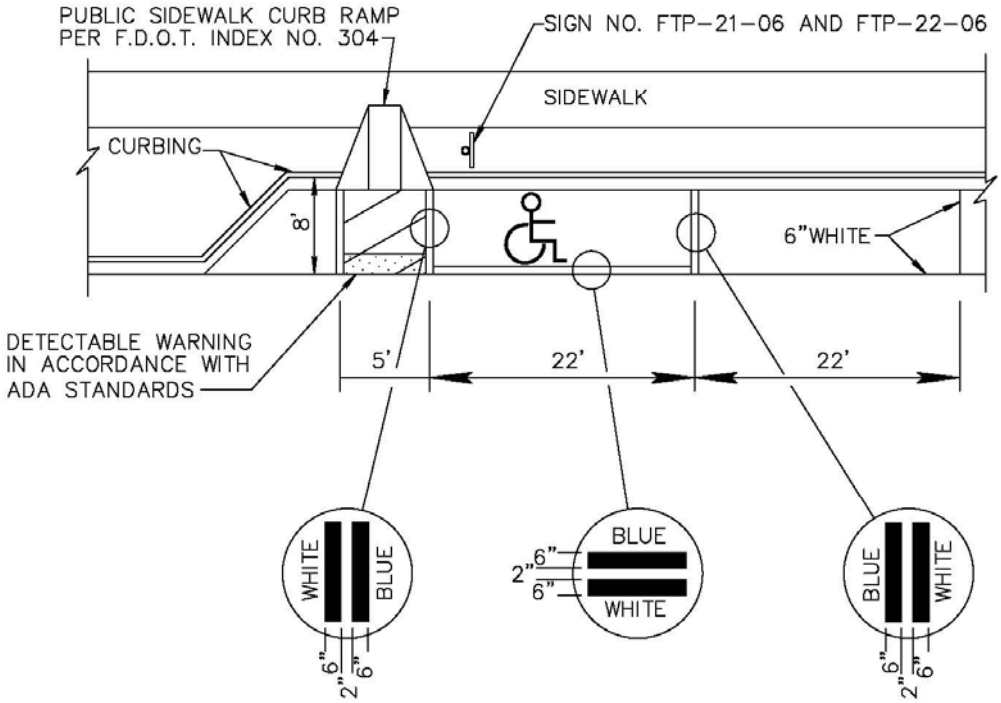

NOTE:

HANDICAPPED PARKING SPACE MUST BE FIRST OR LAST PARALLEL PARKING SPACE IN THE ROW. ADJACENT TO LANDSCAPE ISLAND. IF SPACE, IS AT THE FRONT OF PARKING ROW ACCESS PANEL MUST BE IN FRONT OF CAR AND IF SPACE IS AT THE END OF PARKING ROW ACCESS PANEL MUST BE AT THE REAR OF CAR.

CITY OF LAKE WORTH PUBLIC SERVICES DEPARTMENT	TYPICAL PARKING SPACES	DETAIL NO. 16 ISSUED: 05/15/13

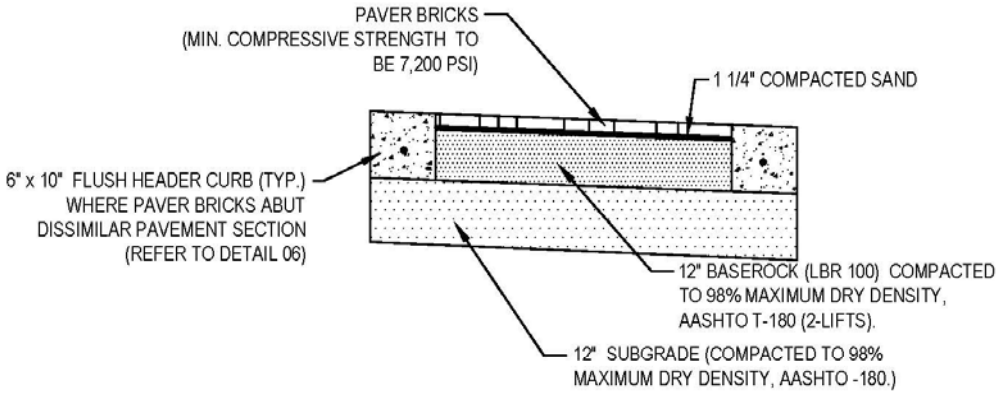

NOTE: INSTALLATION OF PAVER BRICKS SHALL BE IN CONFORMANCE WITH MANUFACTURER'S INSTALLATION CRITERIA. PAVER BRICK THICKNESS SHALL BE MINIMUM 2-3/8 INCHES. PAVER BRICK SHALL BE COLORED THROUGH THE FULL DEPTH OF THE PAVER AND NOT JUST THE SURFACE. THE SAND BEDDING COURSE SHALL BE WELL GRADED, CLEAN, WASHED LIMESTONE SCREENINGS WITH 100% PASSING A 3/8" SIEVE SIZE AND A MAXIMUM 3% PASSING A No. 200 SIEVE SIZE. DO NOT USE MASON SAND. ALL EDGES OF THE PAVER BRICK SHALL BE RESTRAINED BY CONCRETE HEADER CURB OR VALLEY GUTTER. CITY TO APPROVE SIDEWALK PAVER MANUFACTURER, TYPE, COLOR, AND SIZE. SUBMIT THREE (3) SAMPLE PAVERS FOR APPROVAL.

PAVER BRICK DETAIL

N.T.S.

CITY OF LAKE WORTH PUBLIC SERVICES DEPARTMENT	PAVER BRICK	DETAIL NO. 17 ISSUED: 05/10/13

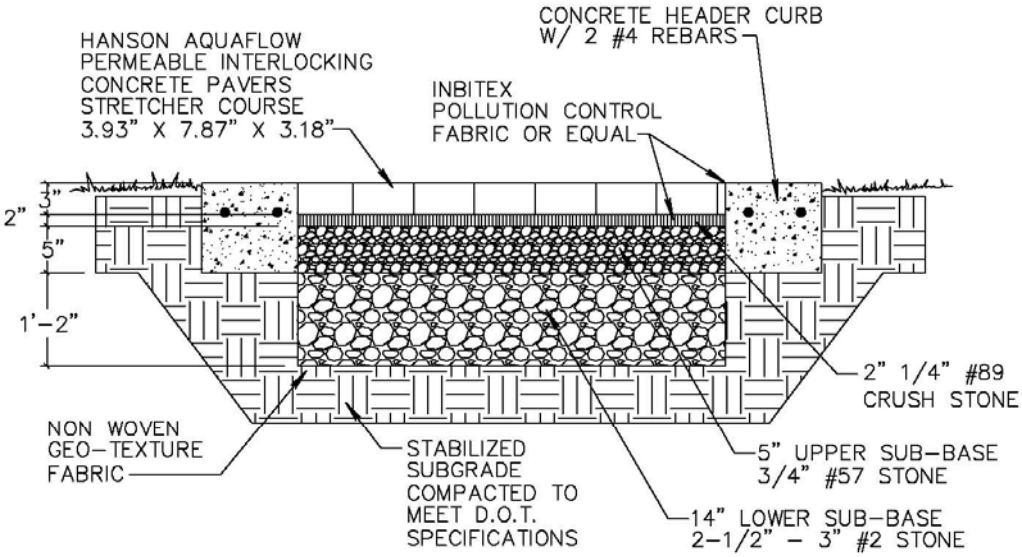

NOTE:

CONTRACTOR TO FIELD VERIFY EXACT LOCATION, SIZE AND DEPTH OF ALL EXISTING UTILITIES AT THE OF CONSTRUCTION AND REPORT ANY DISCREPANCIES TO THE CITY ENGINEER.

CITY OF LAKE WORTH PUBLIC SERVICES DEPARTMENT	PERVIOUS PAVER SECTION DETAIL	DETAIL NO. 18 ISSUED: 05/15/13

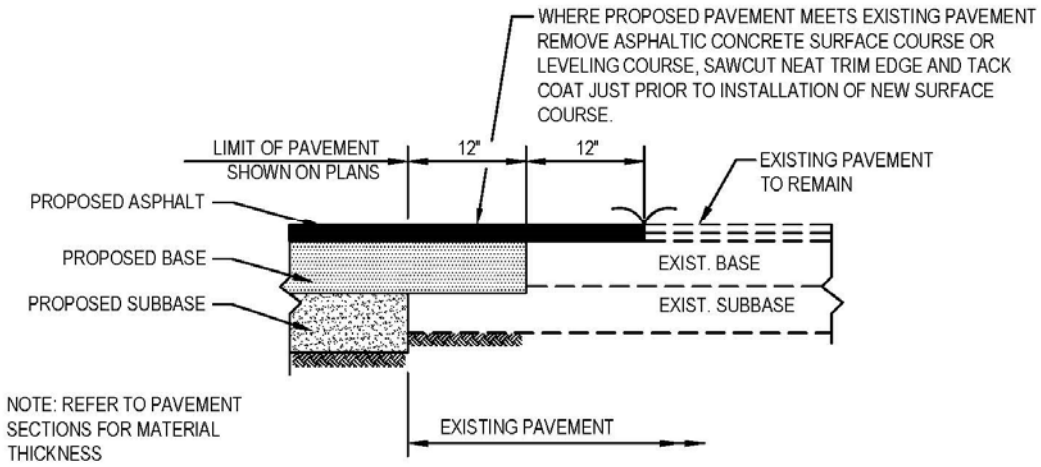

PAVEMENT RESTORATION DETAIL

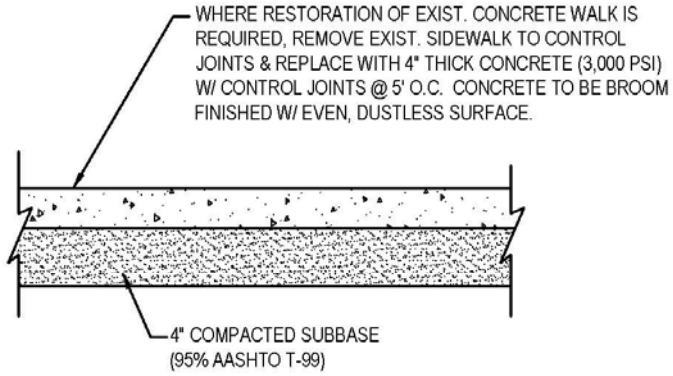

CONCRETE SIDEWALK RESTORATION DETAIL

N.T.S.

CITY OF LAKE WORTH PUBLIC SERVICES DEPARTMENT	PAVEMENT AND SIDEWALK RESTORATION	DETAIL NO. 19 ISSUED: 05/10/13

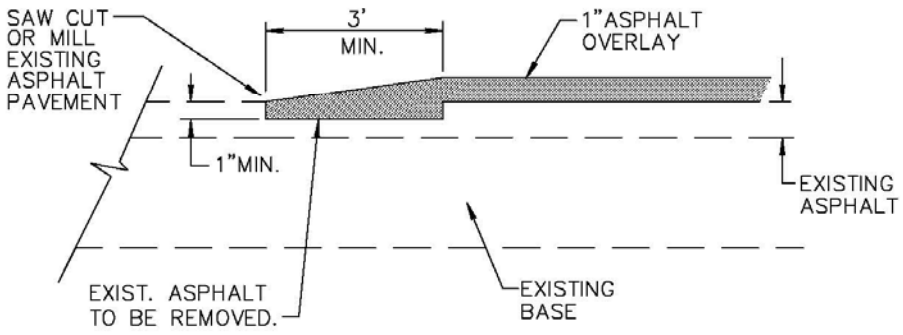

NEW OVERLAY PAVEMENT JOINT

NOTE:

THIS METHOD OF PAVEMENT JOINT SHALL BE USED FOR ANY APPLICATION OR CONSTRUCTION WHERE PROPOSED PAVEMENT WILL BE CONNECTED TO EXISTING PAVEMENT.

CITY OF LAKE WORTH PUBLIC SERVICES DEPARTMENT	PAVEMENT JOINT	DETAIL NO. 20 ISSUED: 05/15/13

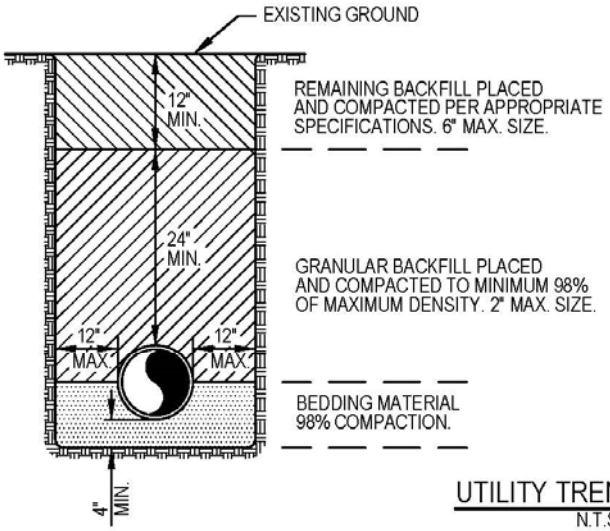

NOTES:

1. BEDDING SHALL CONSIST OF IN-SITU GRANULAR MATERIAL OR WASHED AND GRADED LIMEROCK 3/8" - 7/8" SIZING. UNSUITABLE IN-SITU MATERIALS SUCH AS MUCK, DEBRIS AND LARGER ROCK SHALL BE REMOVED.
2. THE PIPE SHALL BE FULLY SUPPORTED FOR ITS ENTIRE LENGTH WITH APPROPRIATE COMPACTION UNDER THE PIPE HAUNCHES.
3. THE PIPE SHALL BE PLACED IN A DRY TRENCH.
4. BACKFILL SHALL BE FREE OF UNSUITABLE MATERIALS SUCH AS LARGER ROCK, MUCK AND DEBRIS.

UTILITY TRENCH DETAIL

N.T.S.

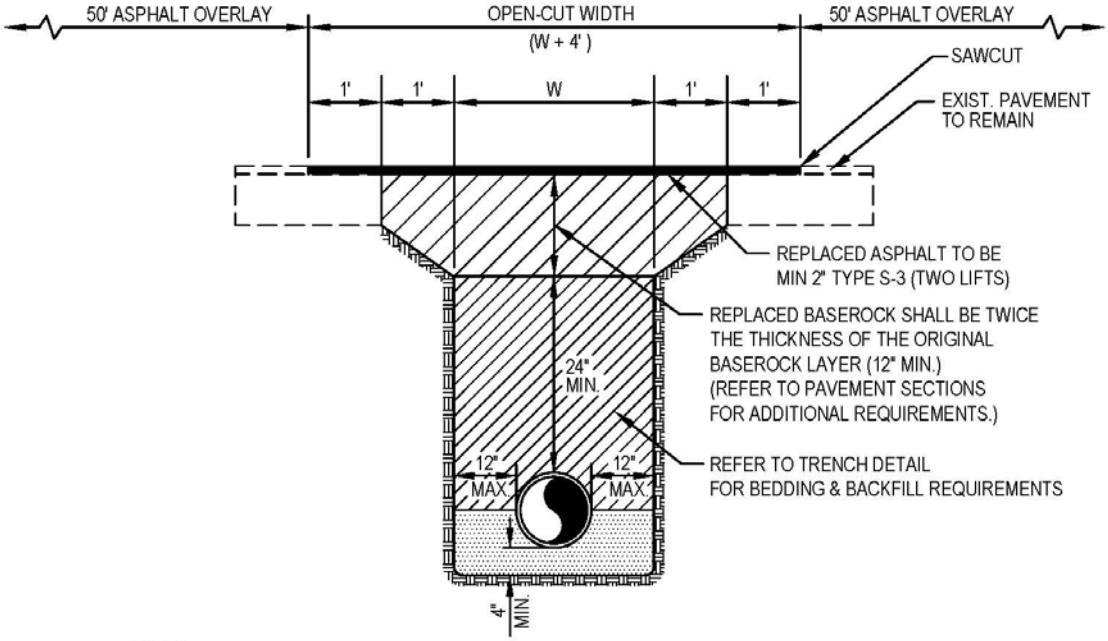

NOTES:

1. PAVEMENT OVERLAY MAY BE REQUIRED IN OPEN-CUT AREAS AT THE DISCRETION OF THE CITY ENGINEER.
2. THE CONTRACTOR SHALL COMPLY WITH APPLICABLE TRENCH SAFETY REGULATIONS.
3. FINISHED SURFACE SHALL HAVE SMOOTH FINISH & SHALL MATCH FLUSH TO SURROUNDING PAVEMENT.
4. ASPHALT OVERLAY SHALL EXTEND A MINIMUM OF 50' BEYOND THE LIMITS OF THE OPEN CUT.

PAVEMENT OPEN-CUT DETAIL

N.T.S.

CITY OF LAKE WORTH PUBLIC SERVICES DEPARTMENT	UTILITY TRENCH AND PAVEMENT OPEN-CUT	DETAIL NO. 21 ISSUED: 05/10/13

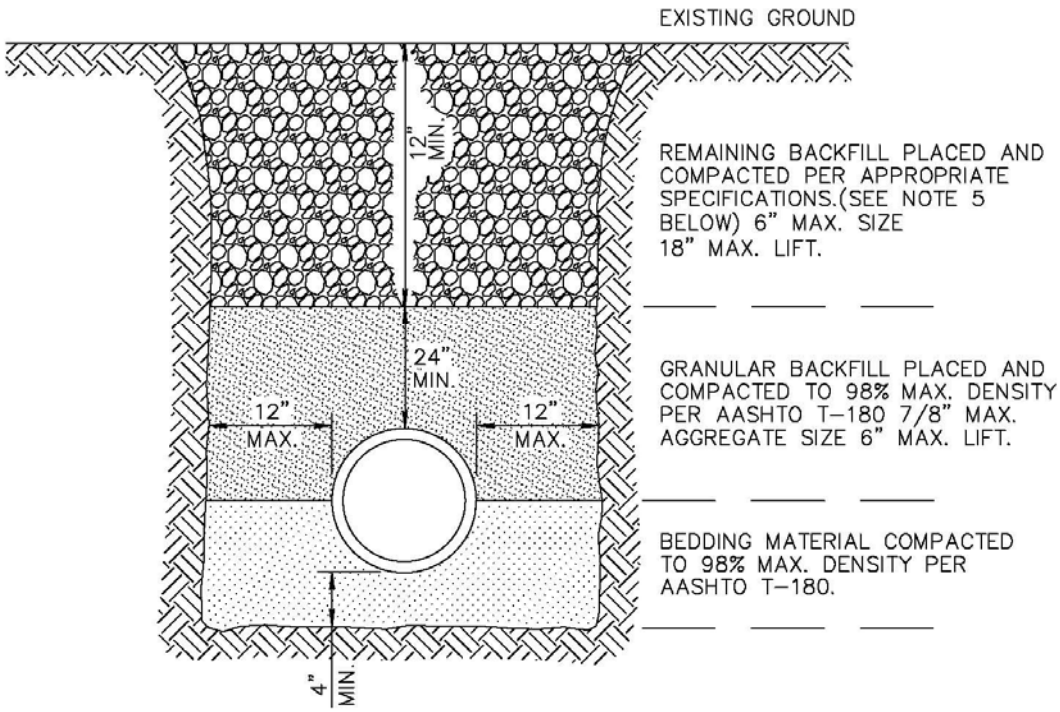

NOTES:

1. UNSUITABLE IN-SITU MATERIALS SUCH AS MUCK, DEBRIS AND LARGE ROCKS SHALL BE REMOVED; BEDDING MATERIAL AND BACKFILL CONSISTING OF WASHED AND GRADED LIMEROCK 3/8" -7/8" SIZING.
2. THE PIPE AND/OR STRUCTURE SHALL BE FULLY SUPPORTED FOR ITS ENTIRE LENGTH WITH APPROPRIATE COMPACTION UNDER THE PIPE HAUNCHES.
3. THE PIPE AND/OR STRUCTURE SHALL BE PLACED IN A DRY TRENCH.
4. BACKFILL SHALL BE FREE OF UNSUITABLE MATERIAL SUCH AS LARGE ROCK, MUCK, AND DEBRIS.
5. COMPACT BACKFILL TO 98% DENSITY UNDER PAVEMENT AND TO 95% DENSITY ELSEWHERE.(AASHTO T-180)
6. COMPACTION AND DENSITY TESTS SHALL BE COMPLETED DURING BACKFILL OPERATIONS, CONTRACTORS NOT FOLLOWING THIS PROCEDURE, FOR WHATEVER REASONS, SHALL BE REQUIRED TO RE-EXCAVATE THE AREA IN QUESTION, DOWN TO THE BEDDING MATERIAL, THEN BACKFILL FOLLOWING THE ABOVE PROCEDURES.

CITY OF LAKE WORTH PUBLIC SERVICES DEPARTMENT	TYPICAL BACKFILL DETAIL	DETAIL NO. 22 ISSUED: 05/15/13

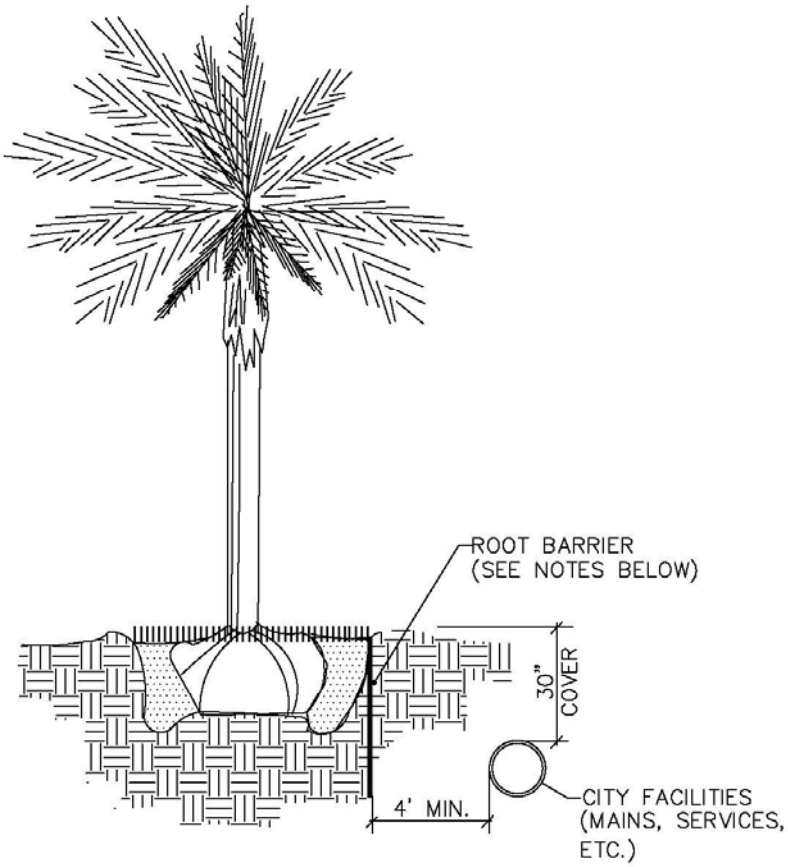

NOTES:

1. ALL ROOT BARRIERS SHALL BE 4' MINIMUM FROM ALL CITY FACILITIES.
2. THE INSTALLATION OF ROOT BARRIERS SHALL BE COORDINATED WITH CITY AND INSPECTED BY CITY PRIOR TO BACKFILLING. ALL ROOT BARRIERS SHALL EXTEND UP TO FINISHED GRADE.
3. ROOT BARRIERS SHALL BE MINIMUM 36" DEEP. APPROVED PRODUCTS INCLUDE "DEEP ROOT" AND "ROOT SOLUTIONS". FLEXIBLE BARRIERS SHALL BE 36" PANELS MANUFACTURED BY BIOBARRIER.
4. ALL ROOT BARRIERS SHALL BE INSTALLED IN ACCORDANCE WITH MANUFACTURERS WRITTEN INSTRUCTIONS.

CITY OF LAKE WORTH PUBLIC SERVICES DEPARTMENT	TYPICAL TREE WITH ROOT BARRIER	DETAIL NO. 23 ISSUED: 05/15/13

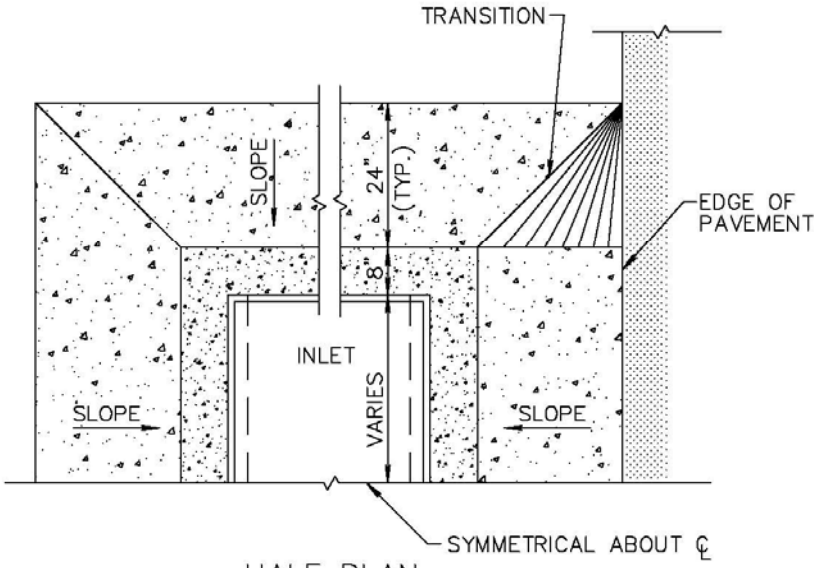

HALF PLAN

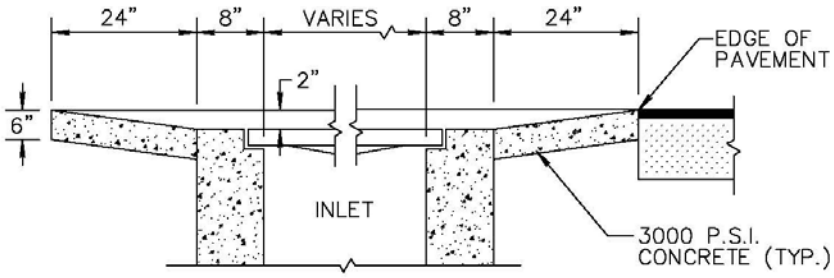

SECTION

CITY OF LAKE WORTH PUBLIC SERVICES DEPARTMENT	INLET APRON DETIAL	DETAIL NO. 24 ISSUED: 05/15/13

1. THE INTENT OF EROSION CONTROL MEASURES INDICATED GRAPHICALLY ON PLANS IS TO PROVIDE A BARRIER TO CONTAIN SILT AND SEDIMENT ON THE PROJECT SITE. THIS REPRESENTATION IS PROVIDED FOR THE CONVENIENCE OF THE CONTRACTOR. THE TEST OF EROSION CONTROL EFFECTIVENESS IS NOT TO BE DETERMINED BY ADHERENCE TO THE REPRESENT SET FORTH ON THE DRAWINGS AND SPECIFICATIONS, BUT BY MEETING THE REGULATIONS SET FORTH BY THE AUTHORITY HAVING JURSDICTION OVER WATER QUALITY CONTROL AND OTHER SEDIMENTATION RESTRICTION REQUIREMENTS IN THE REGION.

2. APPROVED EROSION AND SEDIMENT CONTROL MEASURES SHALL BE INSTALLED PRIOR TO ANY CLEARING GRADING, EXCAVATION, FILLING, OR OTHER LAND DISTURBANCE ACTIVITIES, EXCEPT THOSE OPERATIONS NEEDED TO INSTALL SUCH MEASURES.

3. INSPECTION OF ALL EROSION CONTROL MEASURES SHALL BE CONDUCTED WEEKLY, OR AFTER EACH RAINFALL EVENT. REPAIR, AND/OR REPLACEMENT OF SUCH MEASURES SHALL BE MADE PROMPTY, AS NEEDED.

4. KEEP DUST WITHIN TOLERABLE LIMITS BY SPRINKLING OR OTHER ACCEPTABLE MEANS.

5. ADDITIONAL EROSION AND SEDIMENT CONTROL MEASURES MAY BE REQUIRED IF DEEMED NECESSARY BY ONSITE INSPECTION.

6. FAILURE TO PROPERLY INSTALL AND MAINTAIN EROSION CONTROL PRACTICES SHALL RESULT IN CONSTRUCTION BEING HALTED.

7. DRAINAGE INLETS SHALL BE PROTECTED BY FILTER AND GRADED ROCK AS PER INLET PROTECTION DETAIL.

8. ANY ACCESS ROUTES TO SITE SHALL BE BASED WITH CRUSHED STONE, WHERE PRACTICAL.

9. EROSION CONTROL MEASURES ARE TO BE MAINTAINED UNTIL PERMANENT GROUND COVER IS ESTABLISHED.

10. WHENEVER FEASIBLE, NATURAL VEGETATION SHALL BE RETAINED AND PROTECTED.

11. ALL WORK IS TO BE IN COMPLIANCE WITH THE RULES AND REGULATIONS SET FORTH BY THE STATE OF FLORIDA, DEPARTMENT OF ENVIRONMENTAL PROTECTION AND THE CITY OF DELRAY BEACH.

12. DISCHARGE FROM DEWATERING OPERATIONS SHALL BE RETAINED ONSITE IN A CONTAINMENT AREA.

CITY OF LAKE WORTH PUBLIC SERVICES DEPARTMENT	EROSION CONTROL NOTES DETAIL	DETAIL NO. 25 ISSUED: 05/15/13

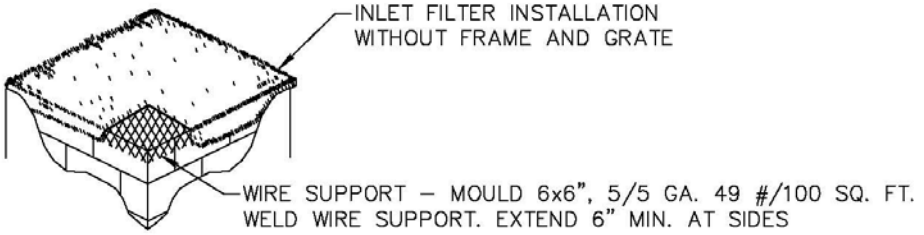

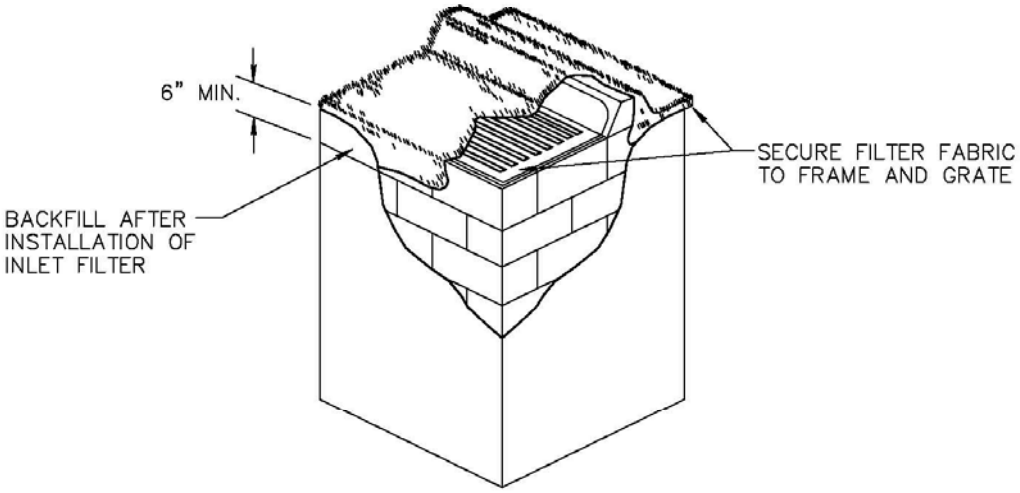

NOT TO SCALE

NOTES:

1. CONTRACTOR IS TO CLEAN INLET FILTER AFTER EVERY STORM.
2. CONTRACTOR TO REMOVE FABRIC JUST PRIOR TO PAVING.

A SEDIMENT TRAP WILL BE EXCAVATED BEHIND THE CURB AT THE INLET. THE BASIN SHALL BE AT LEAST 12 TO 14 INCHES IN DEPTH, APPROXIMATELY 36 INCHES IN WIDTH, AND APPROXIMATELY 7 TO 10 FEET IN LENGTH PARALLEL TO THE CURB.

STORM WATER WILL REACH THE SEDIMENT TRAP VIA CURB CUTS ADJACENT TO EACH SIDE OF THE INLET STRUCTURE. THESE OPENINGS SHALL BE AT LEAST 12 INCHES IN LENGTH. STORM WATER MAY ALSO REACH THE BASIN VIA OVERLAND FLOW LAND AREA BEHIND THE CURB. THE CURB CUTS SHALL BE REPAIRED WHEN THE SEDIMENT TRAP IS REMOVED.

CITY OF LAKE WORTH PUBLIC SERVICES DEPARTMENT	INLET FILTER DETAIL	DETAIL NO. 26 ISSUED: 05/15/13

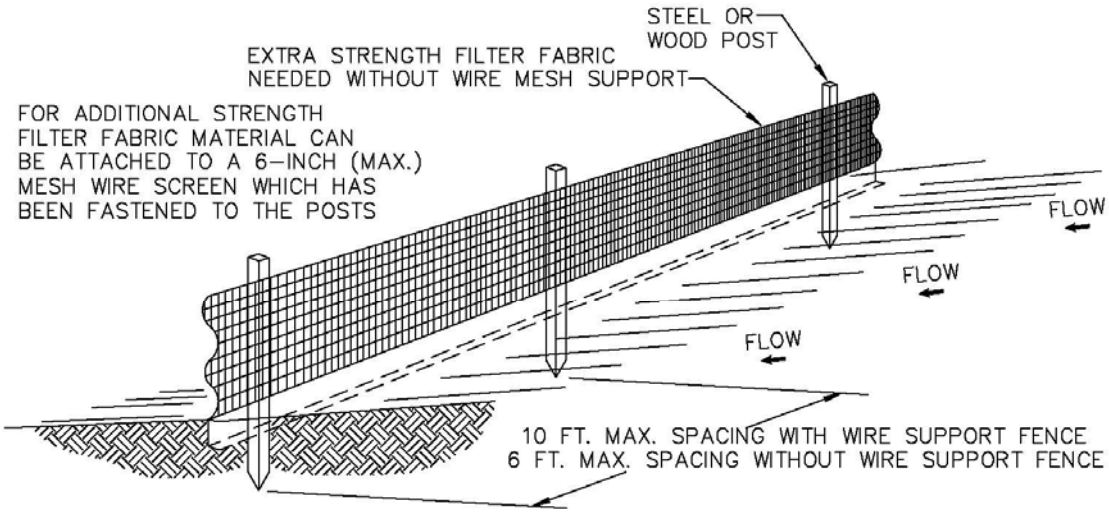

NOTES:

1. THE HEIGHT OF A SILT FENCE SHALL NOT EXCEED 36 INCHES (90 CM).
2. THE FILTER FABRIC SHALL BE PURCHASED IN A CONTINUOUS ROLL CUT TO THE LENGTH OF THE BARRIER TO AVOID THE USE OF JOINTS.
3. POSTS SHALL BE SPACED A MAXIMUM OF 10 FEET (3 M) APART AT THE BARRIER LOCATION AND DRIVEN SECURELY INTO THE GROUND A MINIMUM OF 12 INCHES (30 CM). WHEN EXTRA STRENGTH FABRIC IS USED WITHOUT THE WIRE SUPPORT FENCE, POST SPACING SHALL NOT EXCEED 6 FEET (1.8 M).
4. A TRENCH SHALL BE EXCAVATED APPROXIMATELY 4 INCHES (10 CM) WIDE AND 4 INCHES (10 CM) DEEP ALONG THE LINE OF POSTS AND UPSLOPE FROM THE BARRIER.
5. WHEN STANDARD STRENGTH FILTER FABRIC IS USED, A WIRE MESH SUPPORT FENCE SHALL BE FASTENED SECURELY TO THE UPSLOPE SIDE OF THE POSTS USING HEAVY DUTY WIRE STAPLES AT LEAST 1 INCH (25 MM) LONG, TIE WIRES, OR HOG RINGS. THE WIRE SHALL EXTEND INTO THE TRENCH A MINIMUM OF 2 INCHES (5 CM) AND SHALL NOT EXTEND MORE THAN 36 INCHES (90 CM) ABOVE THE ORIGINAL GROUND SURFACE.
6. THE STANDARD STRENGTH FILTER FABRIC SHALL BE STAPLED OR WIRED TO THE FENCE, AND 8 INCHES (20 CM) OF THE FABRIC SHALL BE EXTENDED INTO THE TRENCH. THE FABRIC SHALL NOT EXTEND MORE THAN 36 INCHES (90 CM) ABOVE THE ORIGIONAL GROUND SURFACE.
7. THE TRENCH SHALL BE BACKFILLED AND THE SOIL COMPACTED OVER THE FILTER FABRIC.
8. ALL PROJECTS REQUIRE SUBMITTAL OF POLLUTION PREVENTION PLAN (PPP).
9. ALL PROJECTS 1 AC. OR MORE MUST SUBMIT NOTICE OF INTENT (NOI) TO FDEP.

CITY OF LAKE WORTH PUBLIC SERVICES DEPARTMENT	SILT FENCE INSTALLATION DETAIL	DETAIL NO. 27 ISSUED: 05/15/13

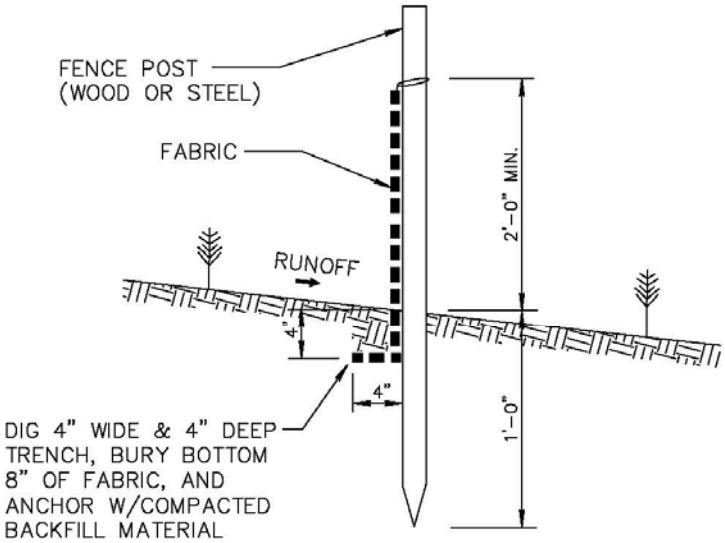

SILT FENCE SECTION
NOT TO SCALE

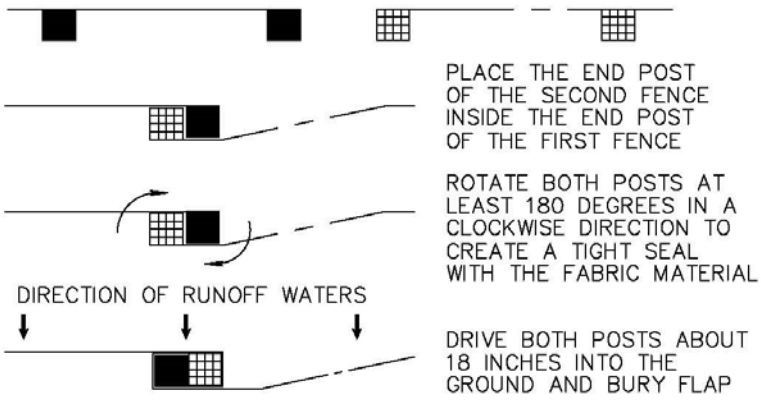

ATTACHING TWO SILT FENCES
NOT TO SCALE

CITY OF LAKE WORTH PUBLIC SERVICES DEPARTMENT	SILT FENCE INSTALLATION DETAIL	DETAIL NO. 28 ISSUED: 05/15/13

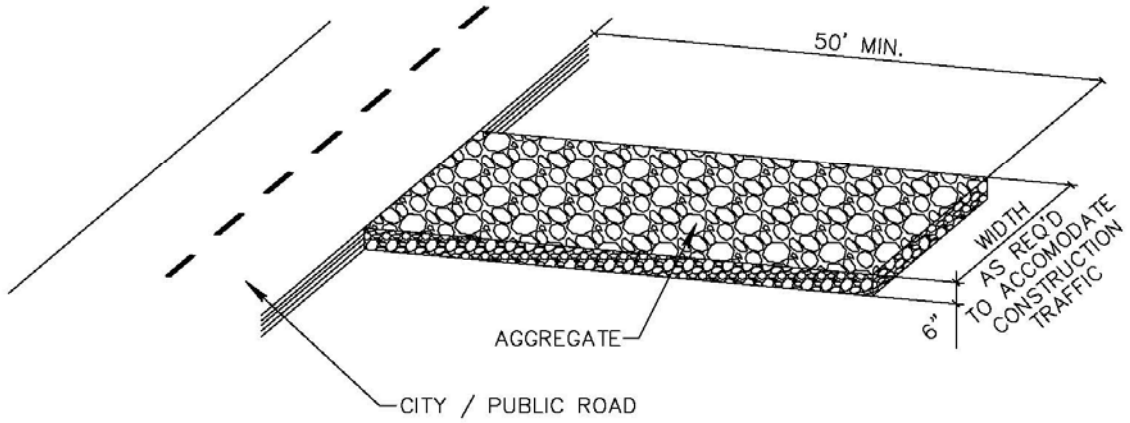

NOTE:

A CONSTRUCTION ENTRANCE SHALL BE CONSTRUCTED AND CONTAIN AN AGGREGATE LAYER (FDOT AGGREGATE NO.1), AT LEAST 6–INCHES THINK. IT MUST EXTEND TO THE WIDTH OF THE VEHICULAR INGRESS AND EGRESS AREA.

CITY/ PUBLIC ROAD TO BE KEPT FREE OF DEBRIS AND AGGREGATE

CITY OF LAKE WORTH PUBLIC SERVICES DEPARTMENT	STABILIZED CONSTRUCTION ENTRANCE DETAIL	DETAIL NO. 29 ISSUED: 09/10/13

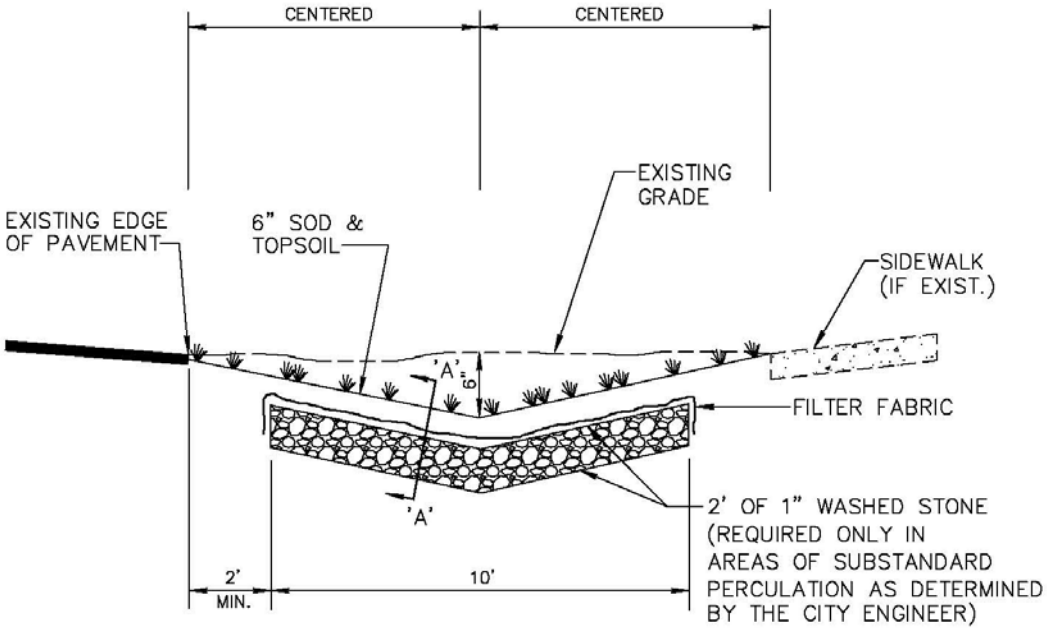

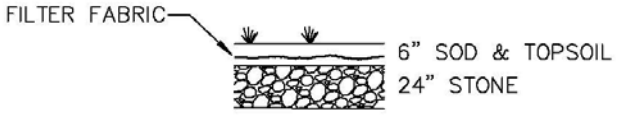

SECTION 'A'–'A'
NOT TO SCALE

NOTE:

1. CONTRACTOR TO REPLACE ALL IRRIGATION, TREES & SHRUBBERY IN SWALES DAMAGED DURING CONSTRUCTION.

CITY OF LAKE WORTH PUBLIC SERVICES DEPARTMENT	SWALE REPLACEMENT DETAIL	DETAIL NO. 30 ISSUED: 05/15/13

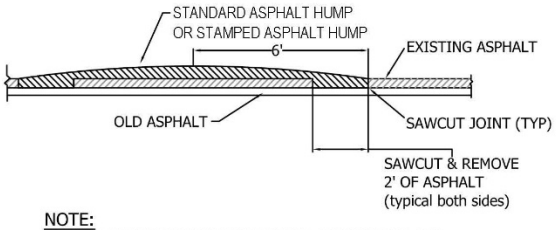

NOTE:
IF EXISTING BASE IS DISTURBED, BASE SHALL BE COMPACTED PRIOR TO PRIME/TACK COAT PLACEMENT.

PAVEMENT TIE-IN DETAIL

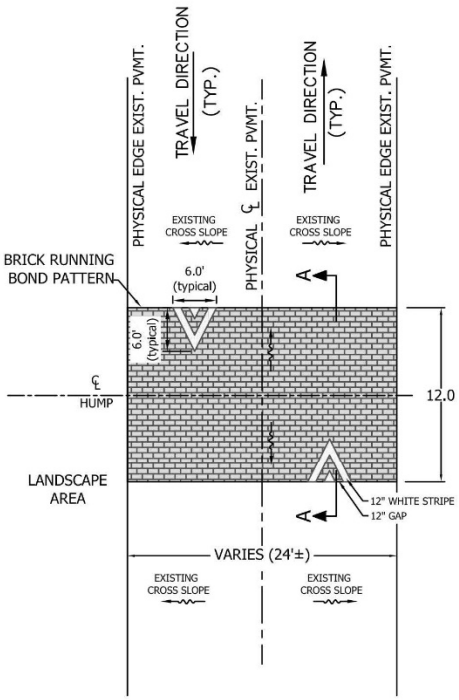

STAMPED ASPHALT DETAIL

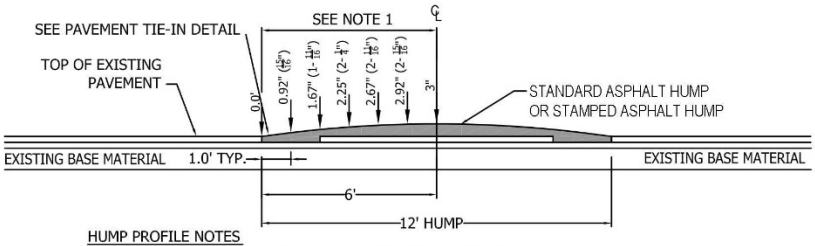

HUMP PROFILE NOTES

1.) THESE DISTANCES SHOWN ARE DIMENSIONED FROM THE FINISHED EXISTING GRADE.

2.) ALL ASPHALT HUMP DIMENSIONS ARE SYMMETRICAL ABOUT CENTERLINE OF HUMP.

SECTION A-A

SECTION A-A NOTES

1. THESE DISTANCES SHOWN ARE DIMENSIONED FROM EXISTING PAVEMENT.
2. ALL ASPHALT HUMP DIMENSIONS ARE SYMMETRICAL ABOUT CENTERLINE OF HUMP.
3. SAWCUT CLEAN, STRAIGHT EDGE AT FOOTER/ASPHALT INTERFACE.

CITY OF LAKE WORTH PUBLIC SERVICES DEPARTMENT	ASPHALT SPEED HUMP	DETAIL NO. 31 ISSUED: 09/18/13

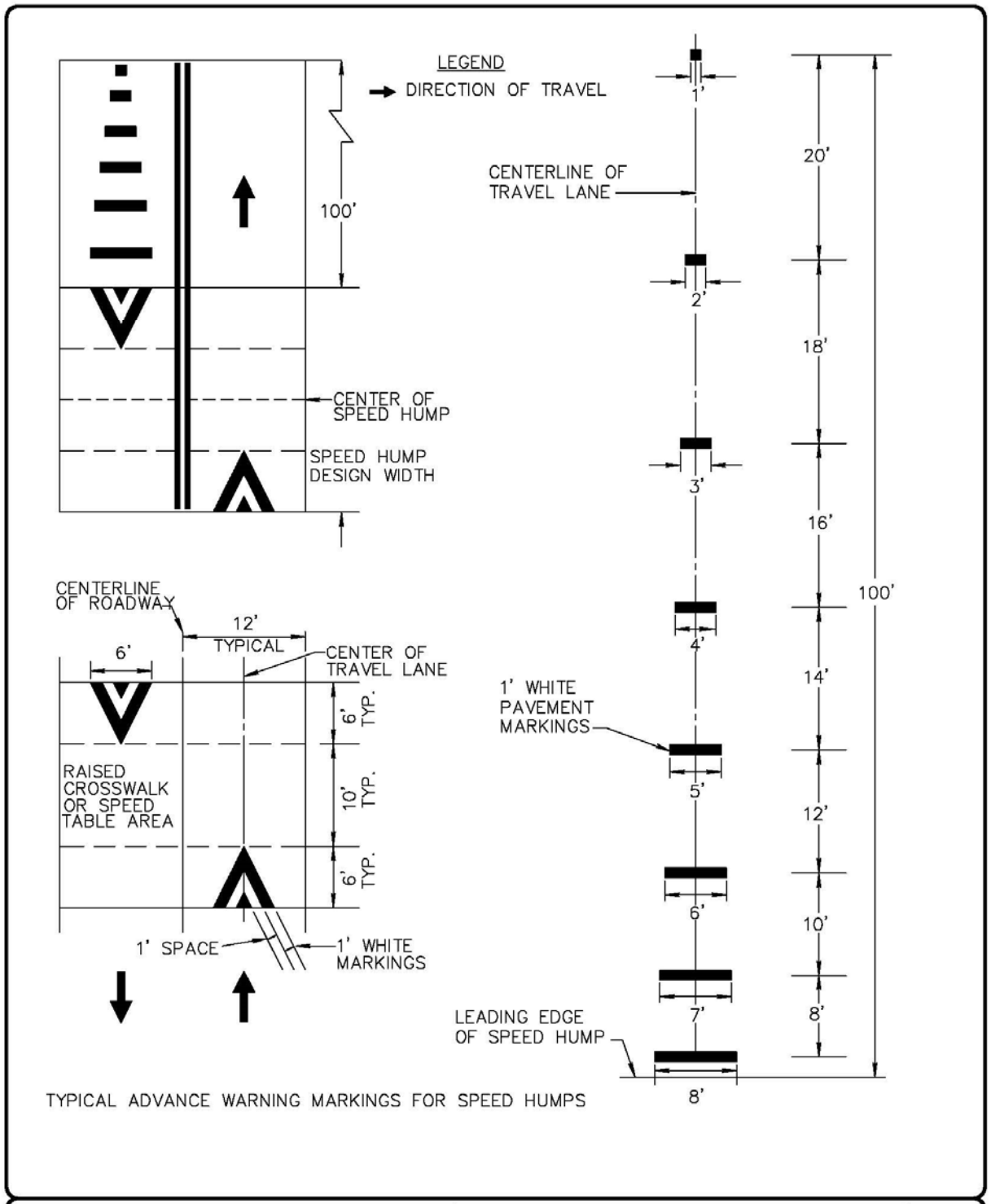

CITY OF LAKE WORTH PUBLIC SERVICES DEPARTMENT	SPEED HUMP PAVEMENT MARKING DETAIL	DETAIL NO. 32 ISSUED: 05/15/13

CMU DUMPSTER ENCLOSURE

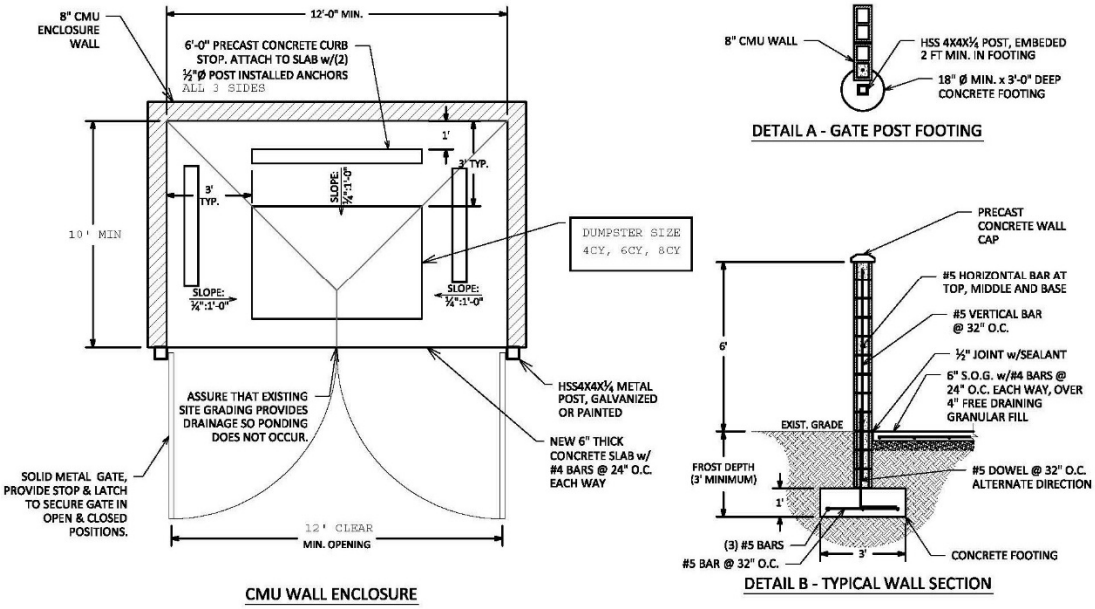

NOTES:
1. CHAIN LINK GATE MAY BE USED PROVIDED THAT THE GATE HAS 3 ½" X 5" PVC PRIVACY SLATS
2. MINIMUM 2" CLEARANCE BETWEEN THE POST AND CONCRETE EDGE
3. ENCLOSURE TO BE SURROUNDED BY AN APPROVED SHRUBBERY ON ALL 3 SIDES, WHEN POSSIBLE.

CITY OF LAKE WORTH - DUMPSTER ENCLOSURE STANDARDS

WOOD FENCE ENCLOSURE

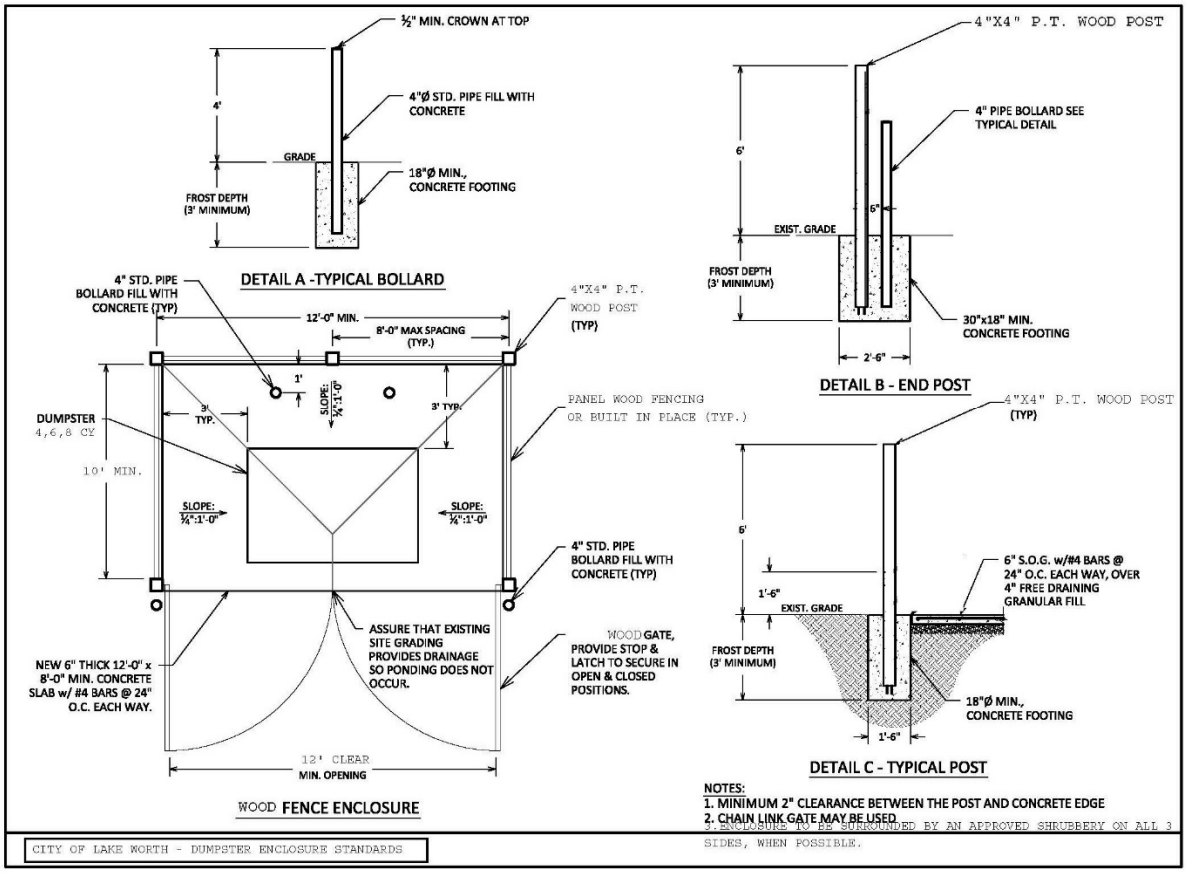

PLASTIC* FENCE DUMPSTER ENCLOSURE

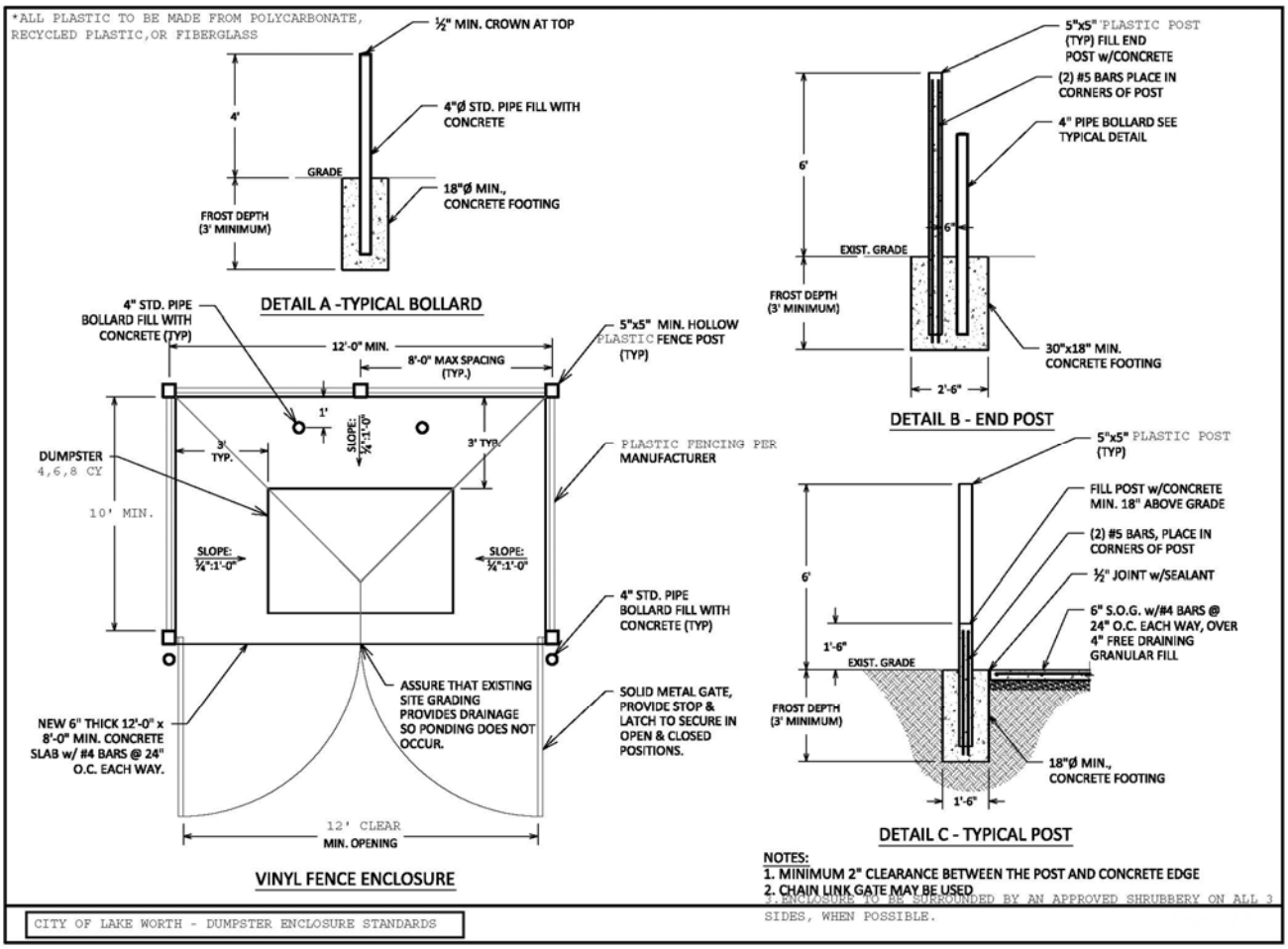

PRECAST CONCRETE DUMPSTER ENCLOSURE

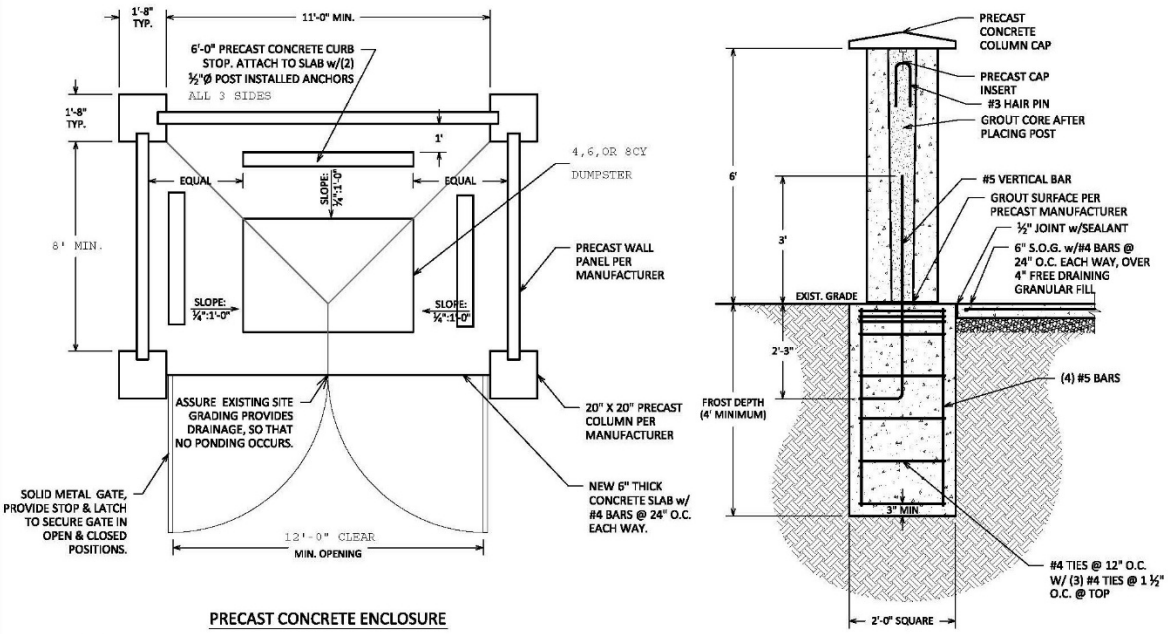

NOTES:

1. PRECAST MANUFACTURER TO DESIGN COLUMNS & WALL PANELS FOR LOAD REQUIREMENTS
2. CHAIN LINK GATE MAY BE USED PROVIDED THAT THE GATE HAS 3 ½" X 5" PVC PRIVACY SLATS
3. ENCLOSURE TO BE SURROUNDED BY AN APPROVED SHRUBBERY ON ALL 3 SIDES, WHEN POSSIBLE.

CITY OF LAKE WORTH - DUMPSTER ENCLOSURE STANDARDS

CHAIN LINK FENCE DUMPSTER ENCLOSURE

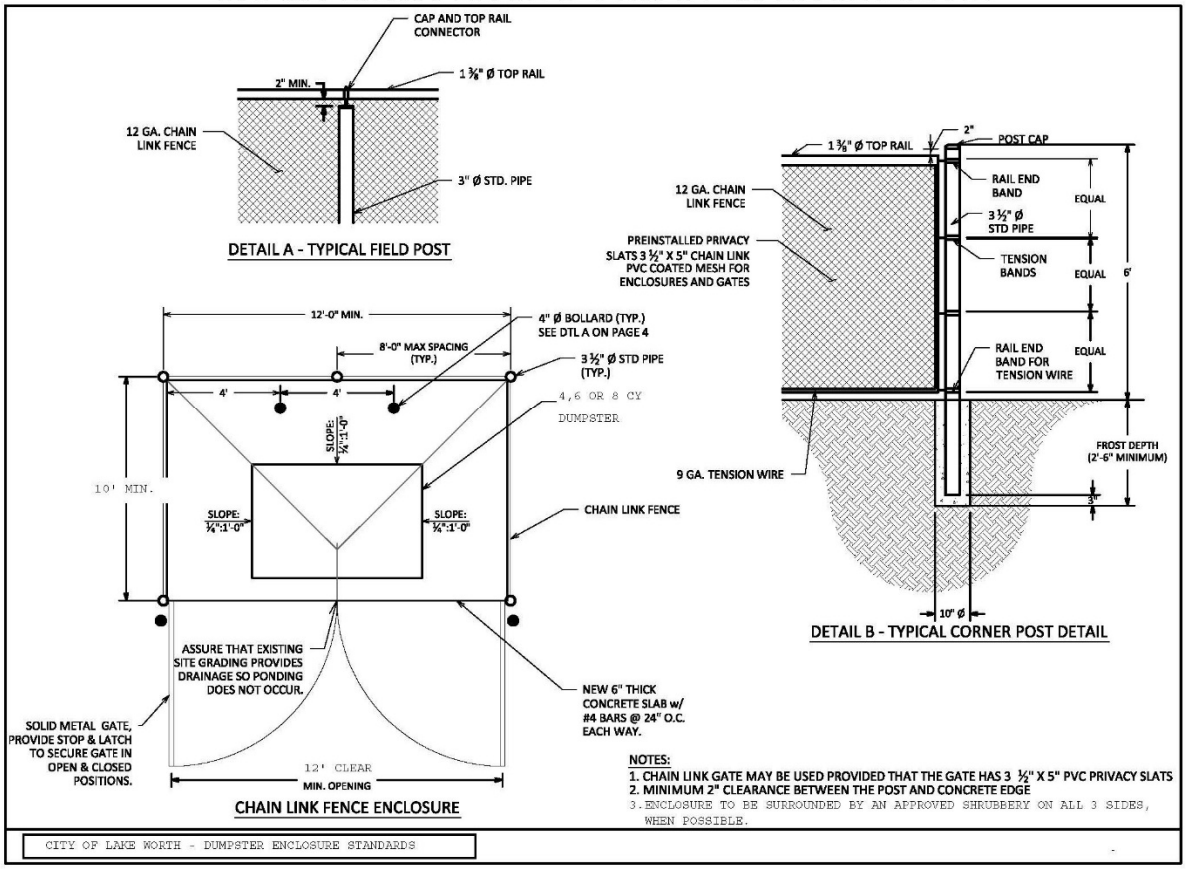

METAL FENCE ENCLOSURE

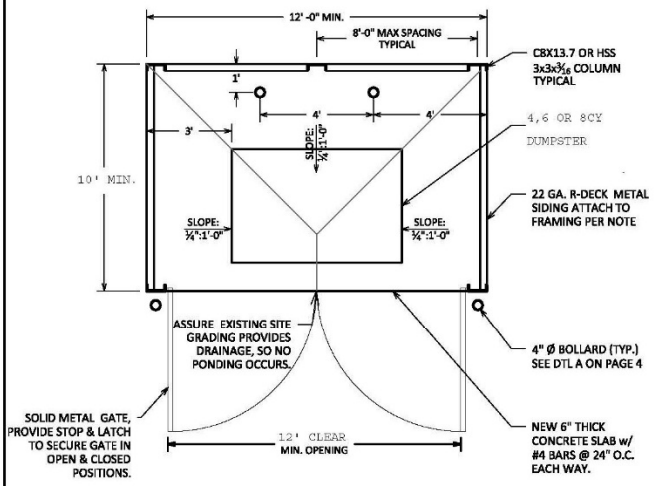

METAL FENCE ENCLOSURE

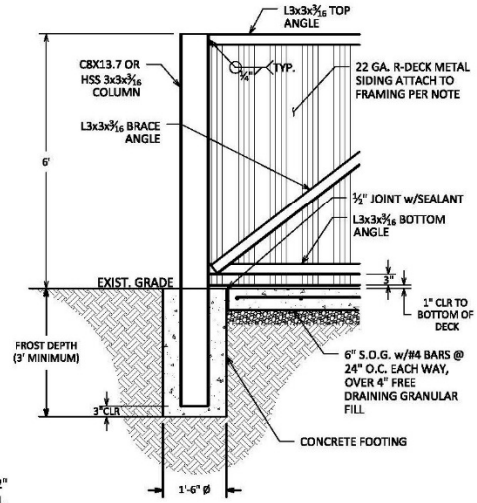

DETAIL A - TYPICAL POST DETAIL

NOTES:
1. ALL STEEL MEMBERS TO BE ASTM A36 STEEL, PRIMED AND PAINTED.
2. WELDS TO BE DONE BY CERTIFIED WELDER. WELDS TO BE PERFORMED USING E70XX ELECTRODE MINIMUM.
3. METAL SIDING TO BE PRIMED AND PAINTED OR GALVANIZED. ATTACH TO TOP AND BOTTOM MEMBERS AT 12" O.C. WITH ¾"Ø PUDDLE WELDS, HILTI X-EDN PIN, OR #12 TEKS SCREWS. SIDE LAP PANEL CONNECTIONS SHALL BE AT 18" O.C. USING EITHER 1 ½" TOP SEAM WELDS OR #12 TEKS SCREWS.
4. HILTI PINS OR TEKS SCREW CONNECTORS (IF USED) ARE TO BE GALVANIZED.
5. PRIME AND PAINT OR OTHERWISE SEAL ALL CONNECTIONS TO PROTECT AGAINST WEATHER. OWNER SHALL BE RESPONSIBLE TO MAINTAIN SEALANTS AND PREVENT METAL FROM RUSTING OR OTHERWISE DEGRADING.
6. CHAIN LINK GATE MAY BE USED PROVIDED THAT THE GATE HAS 3 ½" X 5" PVC PRIVACY SLATS
7. MINIMUM 2" CLEARANCE BETWEEN THE POST AND CONCRETE EDGE
8. ENCLOSURE TO BE SURROUNDED BY AN APPROVED SHRUBBERY ON ALL 3 SIDES, WHEN POSSIBLE.

CITY OF LAKE WORTH - DUMPSTER ENCLOSURE STANDARDS

DEVELOPMENT DESIGN STANDARDS AND REQUIREMENTS

The City of Lake Worth's Public Services Department is committed to building and maintaining rights-of-way that promote the health, safety, and well-being of its citizens and visitors. As a predominantly built out City, it is important that future construction, rehabilitation, and development work be performed in a uniform and regulated manner so as to maintain a high standard of quality in the City's municipal right-of-way system.

The Development Design Standards and Requirements provided in this Policy and Procedure Manual shall dictate the administration of the right-of-way associated with development and right-of-way use.

(1) When the street or alley is totally contained within a subdivision or development project, all improvements necessary to accommodate the demands and impacts of the project shall be provided.

(2) When the street or alley is located on a boundary of the project, the project is responsible for providing all of the current costs of such improvements along its property line. The following are two possible examples:

A. When access to the project is provided from a local street and/or alley, then the project must provide appropriate traffic lanes and pedestrian facilities in order to provide continuous paved access from the nearest paved street or alley to the project in addition to the improvements on its side of the center line of right-of-way.

B. When additional travel lanes are required to accommodate demands made by the project, then the project needs to provide such additional traffic lanes in addition to the improvements on its side of the center line of right-of-way and those required by this section.

(3) Off-site improvements such as work along the property frontage or elsewhere along the right of way must be provided as required by conditions of approval on the development application.

(4) The following principles of street and alley design/layout shall be followed in the platting of subdivisions and development of single lots and tracts of land larger than single lots:

A. The arrangement, character, extent, width, grade, and location of all streets shall conform to the current Palm Beach County Thoroughfare Road Design Procedures, the Florida Department of Transportation Design Standards, or the Transportation Element of the Comprehensive Plan. Also, these factors shall be considered in their relation to existing and planned streets, to topographic conditions, to public convenience and safety, in their appropriate relationship to the proposed use of the land to be served by such streets, and the most advantageous development of the surrounding area.

B. A proposed street or alley layout shall provide for the continuation or projection of existing streets and alleys in the surrounding area unless the Planning and Zoning Board or the Historic Resources Preservation Board deems such extension undesirable for specific reasons of topography or design.

C. Any new street or alley that is an extension of an existing street or alley shall at a minimum have the same width of right-of-way and be paved to the same widths as the existing street or alley provided that it must meet the minimum construction standards of these regulations and that such widths meet the minimum requirements of this Section.

D. Residential streets, alleys and access roadways shall be laid out to discourage through traffic, but provision for street and alley connections into and from adjacent areas will generally be required.

E. Where development abuts, or contains, an existing or proposed arterial street, the City may require marginal access streets, reverse frontages with screen planting contained in a non-access reservation along the rear property line, deep lots with rear service alleys, or such other treatment as may be necessary for adequate protection of residential properties and to afford separation of through and local traffic. (Right of way dedication, landscape easement, or landscape buffer to City)

F. Traffic calmed streets are recommended for minor collector and local streets in order to discourage excessive vehicular speeds and to provide opportunity for attractive vistas utilizing speed humps, bulb outs, landscaping, and other features that may give the appearance of a narrow roadway.

(5) Design Requirements: The following standards shall be met in the design of all streets or alleys.

(A) Intersections:

i. Roads shall be laid out to intersect as nearly as possible at right angles. No road shall intersect another at an angle of less than 60 degrees.
ii. Intersections involving junction of more than two roads are prohibited

except where found to be unavoidable.

iii. Street jogs with center line off-sets less than 125' shall be avoided.

(B) Property line radii shall be as follows:

i. 20' along local roads
ii. Greater than 20', as determined by the Public Services Director, at intersections which are less than 60 degrees

(C) Paving Widths:

Minimums: The following are the minimum paving widths which are required for the category of street or alley.

CATEGORY	MINIMUM PAVING WIDTHS
Major Collector	26 Feet
Minor Collector	26 Feet
Local	26 Feet
Alleys (Residential/Commercial)	10 Feet

(D) Additional Paving: Additional width may be required by the Public Services Director to promote public safety and welfare, and to assure adequate access, circulation, and parking in high-density residential areas, commercial areas, and industrial areas. To determine the necessity for additional pavement, the Public Services Director may require the applicant to furnish a traffic impact analysis and, based upon this analysis, the Public Services Director shall determine the extent to which any additional paving will be needed.

(E) Reduction in Paving Width: A reduction in the required paving widths established in (5)(C) above, may be granted by the Public Services Director. (In certain cases as determined by the PS Director, the use of valley curb, header curb, or other mountable curb may count as part of the minimum paving width requirement)

(F) Dead-End Streets and Cul-De-Sacs:

i. Dead-end streets without provision of a turnaround are prohibited. Generally, a cul-de-sac shall be required; however, in unique situations where a cul-de-sac cannot reasonably be accommodated either a "T" or "hammerhead" turn around may be

accepted by the Planning and Zoning Board or the Historic Resources Preservation Board if approved by the Fire Marshal.

ii. Temporary Dead-Ends: If a street is to be a through street but shall terminate in a dead-end for a significant period of time, a temporary turnaround shall be provided. The temporary turnaround shall be paved unless otherwise provided for by the Planning and Zoning Board or Historic Resources Preservation Board.

iii. A dead-end street shall not exceed 1,000 feet except upon a finding by the Planning and Zoning Board or Historic Resources Preservation Board that one or more of the following would occur:

a. The preservation of natural features and resources
b. Elimination of unnecessary traffic in the area
c. Preservation or increasing of open space.

(G) Clearing and Grubbing: Unless specifically approved in the plans and specifications, the entire width of the right-of-way shall be cleared and grubbed in accordance with the DOT Specifications.

(H) Excavation and Embankment: Excavation and fill, if called for in the approved plans and specifications, shall be in accordance with the applicable portions of the DOT Specifications.

(I) Subgrade: The subgrade shall be uniformly stabilized to a depth of twelve inches to produce a Florida bearing value of 75 psi or LBR 100, in accordance with the DOT Specifications. A compaction of 98% of the maximum density as determined by AASHTO Method T-180 shall be deemed sufficient. The subgrade shall be brought to true grade and approved by Public Services (or appointed party) prior to installation of the base course.

(J) Base Course:

i. A base course of limerock or crushed concrete shall have a minimum depth of eight inches (limerock) or ten inches (crushed concrete) after compaction, and shall be compacted in two layers to the 98% dry density, all in accordance with the provisions of Section 200 of the DOT Specifications. The width of the base course shall exceed the width of pavement as called for in the approved plans and specifications by 12 inches on each side. The use of forms for this course will not be required, and the use of suitable equipment shall be approved by Public Services (or appointed party). The base course shall be inspected and approved by the Public Services (or appointed party) prior to installation of the prime coat.

ii. In case the above materials are not available, the Public Services Director may allow deviations from the above specifications on a case by case basis. Alternate base materials must conform to DOT Specifications.

(K) Priming: After approval, the base course shall be primed and a tack coat applied all in accordance with the DOT Specifications.

(L) Surface Course: The surface course shall be S-I or S-III hot laid asphaltic concrete and shall have a minimum depth of 1-1/2 inches after compaction. Width of paving shall be as called for in the approved plans and specifications and all work shall be in accordance with the applicable portions of the DOT Specifications. Final inspection and approval of the surface course by the Public Services (or appointed party) shall be required.

(M) Clean Up: The site shall be cleared of all debris, excess fill, and equipment in a good and workmanlike manner as approved by Public Services (or appointed party).

(N) Grade, Drainage: Public Services (or appointed party) shall approve the grade and drainage facilities for all construction before a permit shall be issued therefor.

(O) Specifications for Curbs and Gutters: Where the road section approved by the Commission calls for curbs and gutters, they shall be constructed of Class I concrete with a minimum strength of 3,000 psi in accordance with DOT Specifications.

(P) Sidewalks: The primary purpose of sidewalks is to provide a safe place for pedestrian travel. Generally sidewalks are required along both sides of all streets. Sidewalks and curb ramps shall meet the requirements of ADA.

Widths:

a. Low Density Residential Areas 5’
b. Medium and High Density Residential Areas 5’ to 8’
c. Commercial Areas 5’ to 10’
d. Other Areas 5’

*Areas that are on County or State maintained rights-of-way shall meet the requirements above or those of the governing agency, whichever are greater.

i. Sidewalks shall be constructed within the street right-of-way (or easement or tract) and shall be constructed adjacent to the right-of-way (easement or tract) line.

ii. Where possible, a strip of grass or landscape area of a least two feet in width shall separate sidewalks from the street pavement or curb section, as applicable.

iii. Sidewalks shall be constructed with concrete; however, when the sidewalk is to function both as a pedestrian way and a bicycle pathway it may have concrete or asphalt as its finished surface.

iv. Concrete sidewalks, which are located in driveways, shall have a minimum depth of six inches (6") and shall be constructed of Class I concrete with a minimum strength of 3,000 p.s.i.

v. Sidewalks shall be constructed through asphalt driveways.

vi. Sidewalks shall be constructed prior to the issuance of a certificate of occupancy for the property upon which they abut. However, installation of sidewalks within a residential subdivision may be deferred pursuant to an agreement which provides for the installation of a majority of the sidewalks at a given point in time. The Planning and Zoning Board or Historic Resources Preservation Board may require that all sidewalks be installed within a development either at a time certain or upon reaching a certain percentage of build-out of the development. Where a residential or commercial property is performing improvements, it shall be required to construct new sidewalk and curb and gutter for every portion that abuts the right of way prior to the final completion of that project.

vii. Residential: Relief from Sidewalk Installation

a. Alternative System: Within residential developments, an alternativepedestrian way system may be provided and, if deemed acceptable by the Planning and Zoning Board or Historic Resources Preservation Board, it may substitute for sidewalks along the street system.
b. Waiver: Where it is clear that the sidewalk system will not serve its intended purpose, the requirement for sidewalks on both sides of a street may be reduced to installation of a sidewalk along only one side of the street, during the site plan review process, as appropriate.

viii. Non-Residential: Relief from Sidewalk Installation

a. Where it is clear that the sidewalk will not serve its intended purpose, the requirement for installation of a sidewalk adjacent to the property being developed may be waived during site plan approval.

b. Payment In-lieu of Installation: In situations where it is inappropriate to install a sidewalk concurrent with development, the sidewalk installation requirement may be met by the payment of funds sufficient to install the sidewalk. Such funds shall be escrowed and used, at a later date, for the installation of sidewalk improvements.

(Q) Driveways and Points of Access: Regulation of the configuration of driveways and limitations on the points of access from private property onto street systems are necessary to provide for safe and efficient control of vehicular movement.
Access Requirements and Restrictions:

i. All buildings and structures shall be on a lot that accesses a paved street, alley, or road. All buildings and structures shall be located on lots in such a manner as to provide for safe and convenient access for servicing, fire protection, and required off-street parking.

ii. Where commercially zoned property is adjacent to, but separated by a street from single family zoned property, the commercially zoned property shall not use such separating street as access unless no other means of ingress and egress to the commercially zoned property exists.

iii. All improved lots shall have frontage on a paved private or public street. All access to improved lots shall be from a paved private or public street, road, or alley. If paved access is not available the development must provide continuous paved access from the site to the nearest paved street, road or alley.

iv. Where commercially zoned property abuts an alley, the commercial property shall provide for paved access through the alleyway from the full property frontage to the nearest intersecting street.

v. Where residentially zoned property abuts an alley, the residential property shall provide for paved access from the full property frontage up to the nearest intersecting street. Should it be determined by Public Services that paving the alleyway be unnecessary, provisions shall be made for the residential property to provide for a level and graded shellrock access alley.

vi. All streets and alleys shall be defined by being a dedicated right-of-way (for public streets) or as a tract of land (private streets) dedicated by plat or recorded easement, whichever is applicable.

(R) Sight Distance: Shall be provided at the intersection of driveways and streets.
Sight Visibility Triangle Measurements:

i. Driveway Intersecting Street or Alley: The area on both sides of a driveway formed by the intersection of a driveway and a street or alley with a length of ten (10) feet along the driveway, a length of ten (10) feet along the street or alley right-of-way and the third side being a line connecting the ends of the other two lines.

ii. Alley Intersecting Street: The area formed by the intersection of an alley and a street with a length of ten (10) feet along the alley right-of-way, a length of twenty (20) feet along the street right-of-way, and the third side being a line connecting the ends of the other two lines.

iii. Rights-of-Way Intersecting in Single Family Residential Areas: For single family residential zoned property, the area of the property located at the corner formed by the intersection of two public rights-of-way with two sides of the triangular area being twenty-five (20) feet in length along the abutting public right-of-way lines, measured from their point of intersection, and the third side being a line connecting the ends of the other two lines.

iv. Intersections: When an accessway intersects a public right-of-way, all visual obstructions within the sight visibility triangle shall provide unobstructed cross-visibility at a level between three (3)

feet and six (6) feet. Trees or palms having canopy limbs, foliage, and fronds shall be maintained in such a manner that cross visibility is provided. One tree or palm shall be permitted, providing the mature trunk diameter does not exceed fifteen (15) inches. Trees shall not be located within six (6) feet from the edge of any uncurbed accessway pavement. Trees may have a four (4) foot offset from the face of a non-mountable type curb.

v. Landscape Nodes: All trees, palms and hedges installed in medians within a right-of-way shall be constructed in compliance with FDOT specifications.

vi. A request for a relief from the sight visibility triangle dimensions may be granted by the Planning and Zoning Board or Historic Resources Preservation Board on a case-by-case basis and the review shall take into consideration neighborhood characteristics such as the locations of schools, parks, and other community facilities, and street characteristics such as the pavement width, width of the right-of-way to curb or sidewalk, curvature of the street, one-way directional traffic, presence of on-street parking spaces, speed limit and other similar elements.

(S) Driveways may be constructed of concrete or asphalt.

i. The Public Services Director may approve an alternative surface type subject to approval by the Commission upon application for a Variance Agreement, including, but not limited to, stamped concrete and paver brick. If the City has to perform maintenance within the rights-of-way, any alternative surface shall be replaced with concrete with a smooth, non-colored, non-stamped finish.

ii. Driveways shall include that portion of the street located between the travelway (traffic lanes) and private property and said area shall be concrete or improved with an alternative surface as approved through the Variance Agreement process.

iii. If an alternative driveway surface other than concrete is selected, the subbase is to comply with standards outlined in this manual. The City encourages pervious forms of drive surfaces.

iv. Maintenance of concrete, asphalt, or alternative surface driveways constructed within the right-of-way is the responsibility of the abutting property owner. Existing non-compliant driveways that are present a liability due to cracking, non-compliance with ADA, etc. are to be repaired within 5 years of adoption of this manual.

v. All property owners, including but not limited to, duplexes, multi-family, and commercial, but, excluding single family homes, that are not in compliance with this section, prior to the adoption of this Manual, shall be required to come into compliance with this section within 5 years of the adoption of this Manual. Persons that received a variance exempting the property from this requirement allowing another type of surface prior to the effective date of this Manual are not required to comply with these provisions.

(T) Street Lighting: The development of property alongside a public or private street shall be responsible for the installation of street lights pursuant to the practice of the Lake Worth Electric Utility. Arrangements for the deferred installation of such lighting may be accommodated. The financial guarantee for such lighting may be a cash bond, retained by the City.

(U) Traffic Signals: When the traffic from a proposed development, combined with projected traffic at the time of completion of the development, warrants installation of a traffic signal, the installation of such a signal shall be required prior to issuance of a specified occupancy permit. Similarly, when a traffic signal exists but traffic from a proposed development will necessitate a change in the traffic signal, the effecting of such a change shall be required. The owner or developer shall be required to perform a Traffic Concurrency study at the determination of the site plan review committee and bring forth planned improvements in accordance with Palm Beach County Traffic or Florida Department of Transportation standards.

(V) Bicycle Trails, Paths, and Lanes: When a development is located between improved portions of a bicycle trail system, provisions shall be made for the completion of any unimproved linkage. For the purpose of this requirement, it is not necessary that the improved portion of the trail system abut or be adjacent to the property proposed for development.

DEDICATION AND IMPACT REQUIREMENTS

Roadway (Rights-of-Way)

(A) Dedication Required:

i. Streets, public or private, shall be shown on all subdivision plats as tracts dedicated for such purposes. When development occurs absent platting, such streets may be provided for through easements (private property) or dedication of right-of-way by deed (public property).

ii. When a street is contained entirely within a subdivision, the entire dedication may be provided at the discretion of the Site Plan Review Committee.

iii. When development is adjacent to an existing or planned street, the development shall be responsible for providing one-half of the ultimate right-of-way or such portion of the ultimate right-of-way which is yet undedicated and which is on that development's side of the ultimate right-of-way center line. In situations where there are unusual topographic features, greater or lesser dedications may be required.

(B) Compliance with Thoroughfare Plans:

i. Dedication of rights-of-way shall be consistent with the Palm Beach County Thoroughfare Road Design Procedures, the Florida Department of Transportation Design Standards, or the Transportation Element of the Comprehensive Plan.

ii. Proposed streets shall be extended to provide access to adjoining property, as appropriate.

(C) Standard Improvements: The standard improvements which are to be accommodated in street right-of-way are:

i. Travel lanes, including turning lanes

ii. Reconstruction of existing lanes to meet latest adopted standards based on the Pavement Condition Index (PCI) rating recommended treatment;

iii. Parking lanes, where appropriate;

iv. Drainage devices either curb and gutter or swale systems;

v. Pedestrian ways (sidewalks);

vi. Bicycle lanes or paths, where appropriate.

Such improvements shall be provided in accordance with design standards set forth in this manual.

(D) Right-of-Way Dimensions:

i. Right-of-way shall be provided for major and minor collector roads as shown for ultimate right-of-way width in this manual and in the Transportation Element of the Comprehensive Plan.

ii. The following right-of-way width is required for the category of other streets as identified, except as otherwise provided in the Transportation Element of the Comprehensive Plan:

STREET TYPE	WIDTH IN FEET
Major Collector	70 (min.)
Minor Collector	60
Local	40
Alleys	10

(E) Corner Clip: A right-of-way dedication will be required at all intersections of Commercial properties. This right-of-way dedication will consist of an area of property located at the corner formed by the intersection of two or more public rights-of-way with two sides of the triangular area being 20 feet in length along the abutting public right-of-way lines. Further, a dedication of 10 feet shall be required along both sides at the intersection of an alley and right-of-way. These areas are to be measured from their point of intersection, and the third side being a line connecting the ends of the other two lines. This right-of-way dedication will be referred to as a "corner clip" and is provided to ensure adequate right-of-way for the safe movement of pedestrians in the Commercial area. The request for relief from the corner clip requirement may granted by the Planning and Zoning Board or Historic Resources Preservation Board.

(F) Additional Width: Additional right-of-way width may be required to promote public safety and welfare; to provide for stormwater management; to provide adequate area for street trees; and to assure adequate access, circulation, and parking in high intensity use areas. Such a determination shall be made during the site plan review process and may be based upon the results of a traffic study or general knowledge of the City.

(G) Improvement Obligations: Concurrent, or prior to, construction associated with an approved development application, the development shall provide for the construction of off-site improvements as imposed as conditions of approval. Whenever subdivision, development, or redevelopment occurs on property where abutting streets are included in the Comprehensive Plan, Infrastructure Master Plan, Water/Sewer Master Plan, Stormwater Master Plan, or the Capital Improvement Program, provisions shall be made for the accommodation of such improvements.

Drainage Systems

(A) Whenever development occurs, provisions must be made to accommodate drainage which flows from the developed property.

(B) Whenever development occurs on property where drainage facilities are proposed by the Comprehensive Plan or Stormwater Master Plan, provisions shall be made for the accommodation of such facilities.

(C) Dedication Required:

i. Drainage facilities shall be shown on all subdivision plats within easements or rights-of-way dedicated for such purposes. When development occurs absent platting, such facilities may be contained within easements (private property) or dedication of right-of-way (public property).

ii. Sites for retention of drainage shall be shown within a tract dedicated for such purpose. Provisions for the perpetual maintenance of such tracts must be provided on the plat.

(D) Drainage Assessment: Any development application which deals with actual improvements shall be accompanied by a drainage assessment in which a plan for retention of drainage pursuant to adopted levels of service shall be provided.

(E) In addition to providing drainage facilities necessary to adequately serve the proposed development, approval of a development application may be conditioned with the construction of improvements which are necessary to convey drainage from the site or adjacent property through the site which is being developed and to a natural drainage course, canal, or municipal facility.

(F) Drainage facilities shall be extended from their existing terminus to the furthest boundary of the property involved in order to provide for the continuation of service. However, such extension shall not be required if it is determined that there is no reasonable need for such an extension in that there will be no use of it. Where it may not be practical to actually install such facilities concurrent with development of the proposed project, this obligation may be met through some form of payment. In this latter situation, easements for the mains shall be required.

(4) In the event that a proposed development is connecting to an existing stormwater structure, pipe, or appurtenance, the approval of the application may be conditioned with the requirement that the existing stormwater system is cleaned, televised, and determined to be in sound operating condition prior to accepting additional stormwater runoff, as determined by Public Services. The amount and length of cleaning and televising shall be determined within reasonable limits of the proposed property.

CONTRACTOR PREQUALIFICATION PROCESS

PREQUALIFICATION PROCEDURES

1. **GENERAL PROVISIONS**

1.1 Applicability and Scope

All Contractors, for construction projects estimated to exceed $25,000 in cost and where the bid, RFQ or competitive solicitation requires the prequalification, must be prequalified every year in accordance with the provisions of this Procedure to be eligible to be awarded such Construction Projects, **requiring prequalification in the bid, RFQ or other competitive solicitation,** EXCEPT that such prequalification is not required if:

A. The Contractor is prequalified pursuant to a separate prequalification process specific to that project;
B. The City awards a contract based on piggyback or co-op purchase or other method where the City is not issuing a bid, RFQ or other competitive solicitation;
C. The City waives the requirement for prequalification for good cause shown and in the best interest of the City.

1.2 Definitions

Appeal Board. The board, appointed to hear appeals from the Prequalification Committee which shall consist of the Public Services Director, Water Utility Director and the Electric Utility Director.

Application. The "Contractor's Prequalification Application" form prepared by the City to be used to request prequalification and provide information upon which the City will rely.

Building Construction. A Construction Project that consists predominately of the construction of a building, but that may include non-building construction work including roadway construction, the installation of traffic signals, landscaping, and/or paving. Such projects include all subcontracted work necessary to complete the project.

Business Days. All days on the calendar except Saturdays, Sundays, and holidays officially recognized by the City of Lake Worth.

City. "City" means the City of Lake Worth.

Claim. Any appeal, proceeding, or other process for additional consideration of a Dispute, including litigation, that is initiated by the Contractor and to which the adverse party (example - project owner) did not consent.

Committee. The Prequalification Committee.

Construction Equipment. Equipment and appurtenances owned or leased by applicant that are required to complete work in category seeking prequalification.

Construction Projects. Projects being developed by the City as stated in the advertisement for bids with a scope of work that encompasses the construction of on-the-ground improvements including roads, bridges, paths, wharves, piers, buildings, underground utilities and other public infrastructure. It does not include planning, appraisal, design, survey or other engineering services unless such services are to be provided by the Contractor and are specifically within the scope of Work.

Contractor. Individuals, partnerships, corporations, limited liability companies, joint ventures or other entities that desire to submit bids on Construction Projects.

Days. Unless the context clearly indicates otherwise, "days" means Business Days.

Deliver or Delivery. "Deliver" or "Delivery" means Receipt by the person to whom the materials are to be delivered, or their authorized representative. See definition of "Received or Receipt".

Disputes. Disputes include disagreements, matters in question, and differences of opinion between the Contractor (and those working for or through the Contractor) and an adverse party (example - project owner) regarding matters related to the Work including interpretation of and compliance with the contract, compensation and costs, time for performance, and quality.

Filing. "Filing" means Receipt by the person with whom the materials are to be filed, or their authorized representative. See definition of "Received or Receipt".

Fiscal Year. October 1st through September 30th of any year.

Key Personnel. Personnel the loss of whom is likely to impact the cost, quality, timeliness, or conformance of project Work provided for the City as reasonably determined by the Contractor.

Marine Construction. A Construction Project that consists predominately of the construction of marine facilities including seawalls, docks, wharves, piers and related waterside or landside facilities, but that may include non-marine construction work including roadway construction and/or paving. Such projects include all subcontracted work necessary to complete the project.

Number and Classifications of Employees. Number of employees for each category, i.e.; skilled laborers, unskilled, supervisors, foreman, equipment operators, administrative, etc.

Predecessor Entities. Any individual or entity that was legally organized at any time during the past five years (even if not operating) and that was previously owned, operated, or controlled to a Significant degree by the Contractor requesting prequalification, or that Contractor's owners, officers, or Key Personnel.

Predominately. Unless the context clearly indicates otherwise, "predominately" means not less than 50% of cost.

Prequalification Committee. The committee, appointed by the City with primary responsibility and authority to carry out this Procedure. See Section 3.1 of this Procedure.

Prequalification Periods. One (1) year periods starting and ending on October 1st.

Procedure. The procedure and requirements contained in this Contractor's Prequalification Procedure and the accompanying Application.

Project Type. The classification of project for which prequalification may be sought or granted as listed in Section 2 of the Application.

Qualifying Bonding Company. For projects under five hundred thousand dollars, an insurance, bonding, and/or surety company that is acceptable and satisfactory to the City and which meets the requirements of Florida Statutes Section 287.0935. For projects exceeding five hundred thousand dollars, an insurance, bonding, and/or surety company must have a Best Rating of no less than A-VII.

Received or Receipt. Actual receipt by either US mail, overnight courier, service in hand, or fax by the person to whom the materials are addressed, or their authorized representative, with confirmation of receipt originating from such person or their authorized representative.

Recreational Facilities Construction. A Construction Project that predominately consists of the construction of recreational facilities including athletic fields and associated appurtenances such as irrigation systems, sports lighting and playground equipment but that may include non-recreational construction work including building construction, landscaping, and/or paving. Such projects include all subcontracted work necessary to complete the project.

Related Entities. All general partners, joint ventures, parent firms, subsidiaries, or sister firms that (a) are currently legally organized (even if not operating), (b) are owned, operated, or controlled to a Significant degree by the Contractor requesting prequalification, or that Contractor's owners, officers, or Key Personnel.

Roadway Construction. A Construction Project that predominately consists of the construction or reconstruction of a roadway, but that may include non-roadway construction work including bridge construction, sidewalks, landscaping, and/or paving. Such projects include all subcontracted work necessary to complete the project.

Significant. The level or degree that would be reasonably relevant to a party who is contemplating contracting with the Contractor and who is therefore attempting to determine the qualifications, experience, competence, and trustworthiness of the Contractor.

Underground Utilities. A Construction Project that predominately consists of buried conduits for the transport of potable water, wastewater, reclaimed water, storm water, electricity, cable, piping or other City operated utility infrastructure components which may include non-underground utility construction work, such as, paving, curbs, sidewalk or surface restoration. Such projects include all subcontracted work necessary to complete the project.

Work. The furnishing of all labor, materials, equipment, supplies, services, personnel, and other incidentals necessary for the completion of the project in conformity with the contract documents.

1.3 Authority

The City has full power in the letting of all contracts for work under its jurisdiction and thus has the authority to determine whether bidders on construction contracts are responsible. Accordingly, the City has approved this Contractor's Prequalification Procedure and hereby delegates all authority necessary to carry it out as provided in this Procedure.

1.4 Contractor Changes

The Contractor has an ongoing duty to notify the Public Services Director within thirty (30) days of any changes to the information provided in the Application that significantly alters, as reasonably determined by the Contractor, the Contractor's ability to perform the Work required for the Project Types for which it is prequalified. Upon notification by the Contractor or upon discovery by the City, the City may require the Contractor to re-apply for prequalification.

Nothing in this Procedure, the accompanying Application, or any communications from the City regarding prequalification shall be interpreted as depriving the City of the authority to disqualify Contractors, or the authority

to reject any bid in the best interest of the City, when, in the discretion of the City, changed circumstances have affected the responsibility and/or qualifications of the Contractor.

1.5 Window for Prequalification and Duration

The City shall offer two windows for contractors to prequalify for construction projects that are competitively solicited during the City's fiscal year. Contractors must submit the required application and materials to the City prior to July 31 in order to be prequalified for projects that will be competitively solicited after October 1. The City will open up another prequalification window where contractors must submit the required application and materials to the City prior to January 15th in order to be qualified for construction projects that are competitively solicited after March 1of the following year. Unless disqualified or otherwise barred from bidding by the City or other entity with competent jurisdiction, Contractors prequalified during one of the windows for prequalification, pursuant to this procedure, shall be considered eligible to be awarded Project Types for which the Contractor is prequalified for the fiscal year period that started October 1.

1.6 Termination of Prequalification

The City may, in its sole discretion, terminate a prequalification status to any contractor based on the City's determination that the contractor no longer meets the standards for prequalification. Once a contractor's prequalification status has been terminated, the contractor must wait for a period of one year before applying to become prequalified.

1.7 Award of Construction Projects to a Contractor

If a prequalified contractor is awarded one or more construction projects, where the construction work, or portions of the construction work, will be performed at the same time or the contractor is currently working on a construction contract and is the apparent low bidder on another construction project, the City, in its sole discretion may not consider the contractor's bid if the City determines, in its sole discretion, that the contractor would not have sufficient resources to perform the additional work and the award of another contract would not be in the best interests of the City.

1.8 Term of Prequalification

If contractor is prequalified starting October 1 or March 1, the contractor prequalification will expire as of September 30th of same fiscal year.

2. **APPLICATION FOR PREQUALIFICATION**

2.1 Requirement to Submit Application

A Contractor shall not be allowed to submit a response to a bid, RFQ or competitive solicitation on the construction project types attached to this application, with estimated construction costs exceeding $25,000, and where there was a requirement in the bid, RFQ or competitive solicitation that prequalification was required, until the prequalification process has been completed.

2.2 Application Schedule

Regarding the time frame after application, the City anticipates that most Contractors will be prequalified within 60 business days of submitting a complete application package. A full appeal process can take about 3 months

within the City. As provided in Section 4 of this procedure, Contractors determined to be not qualified are not eligible for contract awards pending appeal.

2.3 Project Types for Prequalification

The Contractor must apply for, and the City may prequalify the Contractor for, one or more of the Project Types listed in Section 2 of the Application. The Project Type for individual projects shall be as stated in the advertisement for bids, or if not stated, shall be determined by the Public Services Director or his/her designee.

2.4 Submittal Requirements

The Contractor must honestly, accurately and completely supply all information requested in the Application. Applications will not be considered received until the Public Services Director has received a properly completed Application including all required supporting data. Applications shall not be reviewed by the Committee until properly completed, received and accepted.

3. **PREQUALIFICATION DETERMINATION**

3.1 Prequalification Committee

3.1.1 Membership

The City hereby creates a standing committee, to be known as the Prequalification Committee, with primary responsibility and authority to carry out this Procedure. The City appoints the following City personnel, or their successors, as permanent members of the Committee.

Asst. Director of Public Services, Chair
Asst. Director of Water Utilities, Vice Chair
Public Services Project Manager
Electric Utility Engineer

In the event that any of the above members are unable to serve, or in the event that the Chair determines additional members would be of assistance in the fulfillment of the duties of the Committee, the Chair may appoint other City personnel to serve as alternate or additional members.

3.1.2 Committee Administration

Committee meetings will be called and scheduled when necessary as determined by the Chair. A quorum shall consist of at least three (3) members. The Chair shall preside at all meetings. In the absence of the Chair, the Vice Chair may assume all authority of the Chair. The Chair or designee shall keep minutes of all meetings, record all decisions, and otherwise document the actions of the Committee.

3.2 Review and Investigation

The Committee shall review all information provided in the Application. The Committee or its designees may (a) contact any person or entity necessary to verify and/or supplement any of the information requested by or provided in the Application and (b) review information from other published sources of industry information, information from governments and any other significant information.

3.3 Interview and Additional Information

Whenever the Committee determines that the nature or extent of the information provided in the Application is insufficient or indicates that the Contractor is not qualified, the Committee will contact the Contractor to seek additional information and, if desired by the Contractor, to schedule an interview to discuss the specific reasons that have caused that preliminary determination. The Contractor will submit all additional information requested by the Committee.

3.4 Pass-Fail Evaluation System

The Committee shall evaluate all the information provided or obtained as a whole on a pass-fail basis to determine whether the Contractor is responsible and qualified. In doing so, the Committee will use the following descriptive categories.

QUALIFIED: With respect to the Project Type under consideration, sufficient information exists to determine that the Contractor is likely to complete the construction project in a manner acceptable to the City.

NOT QUALIFIED: With respect to the Project Type under consideration, the information demonstrates that it is unlikely that the Contractor can complete the construction project in a manner acceptable to the City.

3.5 Grounds for Determination of "Not Qualified"

A finding by the Committee based upon substantial evidence that any one of the following conditions exists shall be sufficient grounds, though not mandatory grounds, for an overall determination of "Not Qualified".

1. Unsatisfactory and/or insufficient Contractor experience.

2. Unsatisfactory performance on prior awarded City contracts.

3. Number of personnel with applicable knowledge and experience is insufficient to assure successful completion of the project.

4. Insufficient bonding capability.

5. Safety record below industry standards.

6. Environmental record below industry standards.

7. A denial of prequalification or award of contract, disbarment, or other irregularities with respect to any federal, state, or local government or procurement agencies.

8. A pattern of unsupported Claims.

9. A record of excessive change orders or contract additions.

10. Conviction of a bid or other crime or indictment with substantial evidence regarding the same.

11. Deceptive, evasive or fraudulent statements or omissions contained in the Application, made or omitted at any interview or hearing, or otherwise made to or omitted from the City.

12. Other substantial deficiencies that, in the sole judgment of the Committee, demonstrate that the Contractor is "Not Qualified".

13. Ongoing investigation by the State Attorney, Palm Beach County Office of Inspector General or a local government internal auditor.

3.6 Notice of Prequalification

3.6.1 Time and Contents of Notice

If the Contractor submits a timely and conforming Application, the City will deliver to the Contractor a "Notice of Prequalification" once a decision has been made. The Notice will set forth the Project Types for which the Contractor is eligible to bid, if any. If the City determines that the Contractor is not qualified for any or all Project Types applied for, said Notice will also set forth the reasons therefore to the extent practical.

4. **APPEAL**

4.1 Notice of Appeal

To appeal, the Contractor must deliver a written "Notice of Appeal Regarding Prequalification" to the City Clerk on or before 4:00 P. M. by the fifth full Business Day after the date of receipt of the "Notice of Prequalification" provided under Section 3.6. Such notice must be delivered to the City Clerk's Office located at 7 North Dixie Highway, Lake Worth, Florida. At a minimum, the "Notice of Appeal Regarding Prequalification" must contain:

A. The specific errors that the Contractor alleges were made by the City regarding prequalification;
B. The specific relief sought;
C. A request to submit additional written materials (if desired);
D. A request for a Hearing (if desired); and
E. A designation of counsel or any other party that will be representing the Contractor in the appeal (if any).

4.2 Submission of Written Materials

Within ten (10) Business Days of the filing of the Notice of Appeal Regarding Prequalification, the Contractor and the Committee must deliver to the Appeal Board, and to each other, all written materials that each party contends is necessary for the Appeal Board to fairly and objectively evaluate and decide the appeal. Such materials can include evidence or arguments and a request for a hearing.

4.3 Hearing

If requested by the Contractor, the Committee, or the Appeal Board, a Hearing will take place within twenty (20) Business Days of the filing of additional written materials by the Contractor and/or the Committee, whichever occurs later, at a time and place determined by the Appeal Board. The parties will have at least 72 hour advance notice of such Hearing. The Contractor and the Committee shall each be afforded the opportunity to be heard.

4.4 Decision

The Appeal Board may leave the record of the appeal open for the submission of further evidence or arguments for up to ten (10) business days after the conclusion of the hearing, or to such other mutually agreeable date certain. If no hearing is held, the record of the appeal shall close on the date of filing of additional written materials by the Contractor and the Committee, whichever occurs later.

Unless the Appeal Board reasonably determines that special circumstances exist that justify delay of the decision, the Appeal Board will, within twenty (20) Business Days of the closing of the record:

A. in writing, revise, modify, or reverse the previous determinations regarding prequalification;
B. in writing, affirm the said determinations;
C. in writing, state that the Appeal Board does not intend to take further action; or
D. take no written action, which shall be considered a decision affirming said determination.

4.5 Final Agency Action

Any written revision, modification, reversal, affirmation, or statement that no further action will be taken from the Appeal Board shall be final agency action as of the date of receipt by the Contractor of such writing. If the Appeal Board takes no written action, the City's latest determinations regarding prequalification shall be final agency action as of the date of expiration of the twenty (20) Business Day period for a decision by the Appeal Board provided in Section 4.4 of this Procedure

4.6 Law and Venue

Any action shall be governed by the Laws of the State of Florida and venue shall be in Palm Beach County.

APPLICATION

_____

[Legal Name of Contractor Applying for Prequalification, hereafter "Contractor" or "you"]

The Contractor Seeks Prequalification for the Following

_____ New Submission Package

_____ Prequalification Renewal Package

****

CONTENTS - INFORMATION TO BE SUBMITTED

1. Basic Information
2. Application for Prequalification Types
3. Organizational Structure & History
4. Officers and Owners
5. Experience
6. Key Personnel
7. Bonding
8. Safety
9. Environmental and Civil Rights Information
10. Financial Status
11. Legal Procedures
12. Certifications Under Oath *

[City Use Only Below This Line]

****

Date Application Received: _____

Contractor Prequalified For The Following Project Types

____ Roadway Construction (paving, sidewalks, curbing)
____ Marine Construction (Wharves, Piers. etc.)
____ Building Construction
____ Underground Utilities (water, sewer, stormwater, lift stations)
____ Recreational Facilities Construction

Date of Prequalification: _____

INSTRUCTIONS

1. This Application must be filled out in accordance with all requirements of the City's Prequalification Procedure. The Application and Procedure is available from the City's web site at _____ or from the City's _____, telephone _____. Do not attempt to complete this form without understanding this Procedure.
2. Unless Contractor meets an exception listed in section 1.1 of the Procedure, Contractor must be prequalified to be awarded Construction Contracts, as defined.
3. Regarding the time frame after application, the City anticipates that most Contractors will be prequalified within 60 business days of applying. A full appeal process can take about 3 months within the City.
4. Please print legibly, type, or word process. Sign in ink. When attaching sheets, please place the question number to which you are responding in the upper right hand corner of each sheet and number the sheets.
5. Note that the person signing this Application must swear that the information provided below is true, accurate, and complete.

****

1. Basic Information

Name of Contractor: _____

[Same as on Cover Page of This Application]

Contact Person(s): _____

Telephone No: _____ Fax No: _____ E-mail: _____

Address: _____

_____

Federal Tax ID No: _____

2. Project Types For Which Prequalification Is Applied

[See definitions in section 1.2 of Procedure.]

____ Roadway Construction (paving, sidewalks, curbing)
____ Marine Construction (Wharves, Piers. etc.)
____ Building Construction
____ Underground Utilities (water, sewer, stormwater, lift stations)
____ Recreational Facilities Construction

3. Organizational Structure & History

3.1 The Contractor is duly organized under the laws of the State of _____.

3.2 The Contractor has the following organizational structure.

( ) individual ( ) corporation ( ) partnership
( ) limited liability company ( ) joint venture ( ) other: _____

3.3 Please provide the year the Contractor (and not any Predecessor Entities or Related Entities) was first organized.
_____

3.4 Please list all Predecessor Entities below (or on attached sheets if necessary).

_____
_____
_____

3.5 Please list all Related Entities below (or on attached sheets if necessary).

_____
_____
_____

3.6 If organized in any state other than Florida or in a foreign country, are you in compliance with all laws and regulations necessary to legally do business in the State of Florida?
Note: If organized in the state of Florida please answer N/A.

YES _____ NO _____ N/A _____

3.7 W-9 Submission – Please submit current W-9 if the City has not received.

4. Officers and Owners

4.1 Officers Please list the name, title, and address of current Officers, Directors, Partners, Members, and any other persons with analogous positions, in descending order of degree of control.

Name	Title	Address
_____	_____	_____
_____	_____	_____
_____	_____	_____
_____	_____	_____
_____	_____	_____

[Attach additional sheets as necessary.]

4.2 Owners. Please list the name, address, and percentage of ownership of all persons or entities owning 10 percent or more of the Contractor, in descending order of percentage of ownership.

Owner	Address	%
_____	_____	_____
_____	_____	_____
_____	_____	_____

[Attach additional sheets as necessary.]

Current President or Chief Executive Officer: _____ Years in that position: _____

Number of full-time, permanent employees: office: _____ field: _____

How many years has your organization been in business in Florida as a general contractor under your present name and license number? __

The name of any officer, director or agent who is also an employee of the City must be disclosed. Further, all proposers must disclose the name of any City employee who owns, directly or indirectly, an interest in the proposer's firm or any of its branches.

Name _____ Percentage of Interest _____

5. Experience

5.1 Summary of Contractor Experience With respect to each the following Project Types, list the approximate number of years of experience that the Contractor has as a prime contractor or as a subcontractor with primary responsibility. Provide a minimum of three contracts with a construction dollar value greater than $50,000.00 in cost that were successfully completed within the last five years for each project type that you are requesting prequalification approval. Provide the name of the owner's project manager and general construction information for each project.

Project Type	Years
Roadway Construction	_____
Marine Construction (Wharves, Piers. etc.)	_____
Building Construction	_____
Underground Utilities	_____
Recreational Facilities Construction	_____

List of Construction Equipment Owned	Number and Classification of Employees

5.2 Most Recently Completed Contracts Please provide the information requested in Attachment "A" regarding all contracts, with a construction cost above $50,000.00, that were completed in the last three years by the Contractor. Please list in reverse chronological order (most recently completed project first, next most recently completed project, etc.). For each project listed on Attachment "A" please complete the information requested in Attachment "B".

5.3 Contracts In Progress Please provide the information requested in Attachment "A" for all contracts currently in progress, in descending order of contract amount.

5.4 Provide an alphabetical listing of all state or local government or procurement agencies that have awarded the Contractor (or any Predecessor Entities and Related Entities) a contract during the last five years.

1._____ 5._____

2._____ 6._____

3._____ 7._____

4._____ 8._____

[Attach additional sheets as necessary.]

5.5 Liquidated Damages Within the last five years, has the Contractor (or any Predecessor Entities or Related Entities) had liquidated damages assessed against it?

YES _____ NO _____

If YES, please provide full details on attached sheets including the per diem amount of liquidated damages, the original contract time, and the number of days for which liquidated damages were assessed. Please feel free to include a written summary of your position on the matter.

5.6 Terminations / Suspensions / Defaults

(a) Within the last five years, has a contract of the Contractor (or any Predecessor Entities or Related Entities) been terminated or suspended for cause?

YES _____ NO _____

(b) Within the last five years, has another party (e.g. surety) completed Work which the Contractor (or any Predecessor Entities or Related Entities) was originally responsible to perform?

YES _____ NO _____

(c) Within the last five years, has the Contractor (or any Predecessor Entities or Related Entities) been considered in default of a contract that was not cured within the time frame allowed by the contract?

YES _____ NO _____

If the answer to any of questions 5.6(a) -(c) is YES, please provide full details on attached sheets. Please feel free to include a written summary of your position on the matter.

5.7 Denial of Prequalification or Award

(a) Within the last 5 years, has any federal, state, or local government or procurement agency denied the Contractor (or any Predecessor Entities or Related Entities) prequalification?

YES _____ NO _____

(b) Within the last 5 years, has any federal, state, or local government or procurement agency, after the Contractor (or any Predecessor Entities or Related Entities) submitted the apparent low bid, refused to award a contract for reasons related to the Contractor's qualifications, experience, competence, or financial situation?

YES _____ NO _____

If the answer to either of questions 5.7(a) or (b) is YES, please provide full details on attached sheets. Please feel free to include a written summary of your position on the matter.

5.8 Debarments, Etc

(a) Within the last 5 years, has the Contractor (or any Predecessor Entities or Related Entities) been debarred for any reason by any federal, state, or local government or procurement agencies?

YES _____ NO _____

(b) Within the last 5 years, has the Contractor (or any Predecessor Entities or Related Entities) refrained from bidding for any reason, such as suspension or agreement not to bid, or as part of the settlement of a Dispute of any type with any federal, state, or local government or procurement agencies?

YES _____ NO _____

If the answer to either of questions 5.8(a) or (b) is YES, please provide full details on attached sheets. Please feel free to include a written summary of your position on the matter.

5.9 Claims History Within the last 5 years, has the Contractor (or any Predecessor Entities or Related Entities) been a party to a Claim with an originally claimed amount in excess of $50,000?

YES _____ NO _____

If YES, please provide full details for each Claim on attached sheets including (a) whether the Claim was brought by or against the Contractor (or any Predecessor Entities or Related Entities), (b) the nature of the Dispute underlying the Claim, (c) originally claimed amounts, (d) the resolution of such Claims (including the amount) or if unresolved, the current status of such Claims, and (e) the name, address and phone number of the primary adverse party who can be contacted for additional information, and (f) a written summary of your position on the matter (if desired).

5.10 Bid or Other Crimes Within the last 10 years, has the Contractor (or any Predecessor Entities or Related Entities), or any officers, owners, or Key Personnel of the same ever been indicted on, convicted of, or plead or consented to a violation of a bid crime including bid collusion or any other crime involving fraud or knowing misrepresentation?

YES _____ NO _____

If YES, please provide full details on attached sheets. Please feel free to include a written summary of your position on the matter.

5.11 Quality Control Does the Contractor have a written organizational-level quality control plan (as opposed to project-level plans)?

YES _____ NO _____

If YES, please answer the following two questions.

(a) What year was it first adopted? _____
(b) In what year was its substance last revised? _____

6. Key Personnel

6.1 Please provide the following information for all Key Personnel whose duties consist primarily of one or more the following functions: (a) project management, (b) quality control and (c) safety oversight. [Please feel free to provide this information on attached sheets in another format as long as it contains all the information requested.]

Name	Job Duties (a-c above)	Relevant Licenses or Certifications	Experience (# of Yrs)	Education (Degree or # Yrs)
1_____	_____	_____	_____	_____
2_____	_____	_____	_____	_____
3_____	_____	_____	_____	_____
4_____	_____	_____	_____	_____
5_____	_____	_____	_____	_____
6_____	_____	_____	_____	_____

[Attach additional sheets as necessary.]

7. Bonding

7.1 Is the Contractor capable of obtaining from a Qualifying Bonding Company a performance bond and a payment bond each in the amount of the bid prices that the Contractor will be submitting to the City? [See definition of "Qualifying Bonding Company" in section 1.2 of Procedure.] Note: For projects exceeding five hundred thousand dollars, an insurance, bonding, and/or surety company must have a Best Rating of no less than A-VII

YES _____ NO _____

If YES, please attach a letter from a Qualifying Bonding Company that: (a) states that the said company meets the definition of "Qualifying Bonding Company" set forth in section 1.2 of the Procedure and (b) sets forth the bonding capacity of the Contractor including a specific dollar amount for single project and aggregate amount. Letters indicating "unlimited" bonding capacity are not acceptable. (c) States verification that Bonding Company accepts City Bond Form (sample attached).

If NO, please explain why you cannot meet the bonding standards set forth in question 7.1 above on attached sheets.

8. Safety

8.1 Does the Contractor have a written safety program?

YES _____ NO _____

If YES, please answer the following two questions.

(a) What year was it first adopted? _____
(b) In what year was its substance last revised? _____

8.2 Does the Contractor hold regular work site safety meetings for immediate supervisors?

YES _____ NO _____

If YES, at what frequency? Weekly ____ Monthly ____ Other _____

8.3 For each of the last three (3) full calendar years, provide the following totals from your "Log and Summary of Occupational Injuries and Illnesses" (US City of Labor, Bureau of Labor Statistics, OSHA No. 200). [Please feel free to attach copies of your OSHA No. 200 logs or to provide this information in another format on attached sheets as long as it contains all the information requested.]

OSHA No. 200 Column #	Description	3 Yrs Ago Yearly Total 20 ___	2 Yrs Ago Yearly Total 20 ___	Last Yr Yearly Total 20 ___
1	# of Injury Related Fatalities	_____	_____	_____
2	# of Injuries Involving Lost or Restricted Workdays	_____	_____	_____
3	# of Injuries Involving Days Away From Work	_____	_____	_____
4	# of Days Away From Work Due To Injuries	_____	_____	_____
5	# of Restricted Workdays Due to Injuries	_____	_____	_____
8	# of Illness Related Fatalities	_____	_____	_____
9	# of Illnesses Involving Lost or Restricted Workdays	_____	_____	_____
10	# of Illnesses Involving Days Away From Work	_____	_____	_____
11	# of Days Away From Work Due To Illnesses	_____	_____	_____
12	# of Restricted Workdays Due To Illnesses	_____	_____	_____

On attached sheets, please feel free to provide other information to aid in the interpretation of the above information including, for example, the ratio of the above line items to total days worked.

8.4 Have you had any accident in the past three years that caused over $ 50,000 in property damage?

YES _____ NO _____

If YES, please provide full details of each such accident on attached sheets.

Please feel free to include a written summary of your positions regarding any of the information provided in this section 8 - Safety.

9. Environmental and Civil Rights Information

9.1 Environmental Record. Within the last 5 years, has the Contractor (or any Predecessor Entities or Related Entities) been found to be in violation of any federal, state or local environmental law or regulation in an administrative, civil or criminal proceeding in which the fact finder found that the Contractor intentionally or knowingly committed the violation and/or failed to comply after having been notified of the violation?

YES _____ NO _____

If YES, please provide full details, including a summary of your position, on attached sheets.

9.2 Civil Rights Record. Within the last 5 years, has the Contractor (or any Predecessor Entities or Related Entities) had any findings and/or rulings of sexual harassment, discrimination, or other civil rights violations against it?

YES _____ NO _____

If YES, please provide full details, including a summary of your position, on attached sheets.

10. Financial Status

10.1 Financial Statements

The City requires an indication of the resources and the necessary working capital available and how it will relate to the Applicant Firm's financial stability through the completion of the project. Include the most recent and two (2) years audited financial statements (including notes), with letter from a C.P.A. including Contractor's latest balance sheet and income statement showing the following items:

1. Current assets, i.e., cash, joint venture account, accounts receivable, notes receivable, accrued income, deposits, materials inventory, and prepaid expenses.

2. Net fixed assets.

3. Other assets.

4. Current liabilities, i.e., accounts payable, notes payable, accrued expenses, provision for income taxes, advances, accrued salaries, and accrued payroll taxes.

5. Other liabilities, i.e., capital, capital stock, authorized and outstanding shares par values, earned surplus, and retained earnings.

6. Name of firm preparing financial statement and date thereof.

7. Dun and Bradstreet report with agreement to pay for additional reports as may be required by the City if the Proposer is selected as a finalist. The Dun and Bradstreet report required will be either DNBi Live Report or DNBi Comprehensive Report.

10.2 Bankruptcies

1. Has the Contractor, parent company, or any of its subsidiaries, ever had a Bankruptcy Petition filed in its name, voluntarily or involuntary? (If yes, specify date, circumstances, and resolution).

2. Has any Majority Shareholder ever had a Bankruptcy Petition filed in his/her name, voluntarily or involuntarily? (If yes, specify date, circumstances, and resolution).

10.3 Liquidated Damages

At any time in the last five years, has your firm been assessed and paid liquidated damages after completion of a project, under a construction contract with either a public or private owner? If yes, what was the amount of liquidated damages paid?

10.4 Loans

Is your firm currently in default of any loan agreement or financing agreement with any bank, financial institution, or other entity? (If yes, specify details, circumstances and prospects for resolution).

10.5 Bonding

1. What is the Contractor's current bonding capacity with a contract surety company for a

single project? _____ In the aggregate? _____

2. Please identify the Contractor's surety company and the current line of bonding credit that company has extended to Contractor and attach documentation of bonding capacity from the surety company:

3. Name, address, and telephone number of current surety agent or underwriting contact:

4. Have Performance or Payment Bond claims ever been made to a surety for this Contractor on any project, past or present? If the answer is Yes, how many claims have been made?

5. If the answer to (4) is yes, please describe the claim, the name of the company or person making the claim, and the resolution of the claim.

6. During the last five years, has your firm ever been denied bond credit by a surety in place during a public construction project when one was required? (If answer is yes, specify the reasons given for that refusal, and the name and address of the surety company that refused to bond).

7. In the past five (5) years, has any surety company refused to bond the Contractor's parent, or subsidiaries, on any project? (If answer is yes, please specify the reasons given for that refusal, and the name of the surety company).

8. Is your firm capable of achieving the following criteria for bonds and insurance; A – VIII rating according to the current AM Best published report?

9. If your firm was required to pay a premium of more than one per cent for a performance and payment bond on any project(s) on which your firm worked at any time during the last three years, state the percentage that your firm was required to pay. You may provide an explanation for a percentage rate higher than one per cent, if you wish to do so.

_____ %

11. Legal Proceedings

11.1 Arbitration

List all construction arbitration demands filed by, or against, the Contractor in the last five years, and identify the nature of the claim, the amount in dispute, the parties and the ultimate resolution of the proceeding.

11.2 Lawsuits

List all construction-related lawsuits (including but not limited to personal injury litigation) filed by, or against, the Contractor in the last five years, and identify the nature of the claim, the amount in dispute, the parties, and the ultimate resolution of the lawsuit.

11.3 Other Proceedings

1. Identify any lawsuits, administrative proceedings, or hearings initiated by the National Labor Relations Board or similar state agency in the past five years concerning any labor practices of the Contractor Identify the nature of any proceeding and its ultimate resolution.

2. Identify any lawsuits, administrative proceedings, or hearings initiated by the Occupational Safety and Health Administration concerning the project safety practices of the Contractor in the last five years. Identify the nature of any proceeding and its ultimate resolution.

Note: If you have filed an appeal of a citation and the Occupational Safety and Health Appeals Board has not yet ruled on your appeal, you need not include information about it.

3. Identify below and submit a list of any OSHA citations and any fines that may have been imposed on your company or organization in the past five years if proposer is a joint-venture or partnership, list citation for both firms

Note: If you have filed an appeal of a citation and the appropriate appeals Board has not yet ruled on your appeal, you need not include information about it.

4. Has the EPA or any Air Quality Management District or any Regional Water Quality Control Board cited and assessed penalties against either your firm or the owner of a project on which your firm was the contractor, in the past five years?

Note: If you have filed an appeal of a citation and the Appeals Board has not yet ruled on your appeal, or if there is a court appeal pending, you need not include information about the citation.

How often do you require documented safety meetings to be held for construction employees and field supervisors during the course of a project?

5. In the last five years, has any insurance carrier, for any form of insurance, refused to renew the insurance policy for your firm?

6. State your current Workers Compensation Experience Modification Factor.

NOTE: An Insurance Modification factor is issued to your firm annually by your workers' compensation insurance carrier.

Current year: _____ _

Previous year: _____
Year prior to previous year: _____

If the EMF for any of these three years is or was 1.00 or higher, you may, if you wish, attach a letter of explanation.

7. Within the last five years, has there ever been a period when your firm had employees but was without workers' compensation insurance or state-approved self-insurance?

8. Identify any lawsuits, administrative proceedings, or hearings initiated by the Internal Revenue Service, or any State revenue department, concerning the tax liability of the Contractor (other than audits) in the last five years. Identify the nature of any proceeding and its ultimate resolution.

9. Have any criminal proceedings or investigations been brought against the Contractor in the last ten years? (If the answer is yes, please attach a complete and detailed report with your responses to this Questionnaire).

12. Certifications Under Oath

By signing below, the person signing below hereby certifies and swears, **ON OATH**, as follows.

1. I have personal knowledge of all the information contained in this Application OR I am responsible for the accuracy of all such information
2. The information contained in this Application is true and complete.
3. I hereby authorize the City to contact any person or entity necessary to verify or supplement any of the information requested by or provided in this Application without liability, and I hereby further authorize any person or entity contacted to provide any and all information requested without liability.
4. The Contractor has read, understands, and agrees to all terms of the Prequalification Procedure and this Application.
5. I am duly authorized by law and by the Contractor to sign this Application on behalf of the Contractor.

_____ CONTRACTOR
Date

_____ _____
Witness [Signature]

By: _
[Name and Title Printed]

State of _____

County of _____ Date: _____

Then personally appeared the person who signed this page above and acknowledged this instrument to be his or her free act and deed and the free act and deed of the Contractor, and further said person swore, ON OATH, that the statements made under the section 10 entitled "Certifications Under Oath" are true and complete.

_____
[Signature of Notary Public]

Name Printed: _

My Commission Expires: _ _ _ _ _ _ _ _ _ _ _ _ _ _ _

ATTACHMENT "A"

PREQUALIFICATION APPLICATION SPECIFICS

(Attach any additional information as needed)

Project Name	Total Project Value	Dollar Value Performed by Applicant	Prime or Sub	% of Work SELF Performed

V. EMERGENCY MANAGEMENT

INTRODUCTION

An emergency management program is designed to save lives and protect property in the event of an emergency.

Disasters and emergencies affecting large areas and many people can sometimes develop quickly. Flash floods and earthquakes, for example, can strike with little or no advance warning. Other types of disasters and emergencies are preceded by a build-up period that provides more time for taking protective measures.

Major Threats in Florida:

Hurricanes
Floods
Power Plants
Hazardous Materials
Terrorism

Other Threats:

Drought/energy crisis
Severe weather
Airplane crashes
Mass fatality incidents
Prison disturbances

To find out what type and how many resources will be required to handle the problems in a jurisdiction, the threats that exist to a community and region must be determined.

APPROVAL & IMPLEMENTATION

EMERGENCY SUPPORT FUNCTION-1 TRANSPORTATION

This Emergency Support Function is hereby approved. This Emergency Support Function is effective immediately and supersedes all previous editions.

Director, Public Services — Date: 6/4/13

Director, Human Resources / Risk Management — Date: 5-15-2013

City Manager — Date: 5/17/2013

EMERGENCY SUPPORT FUNCTION – 1 TRANSPORTATION

Record of Changes			
Description of Change	Date of Change	Entered By	Date Entered

ESF COORDINATOR: *DIRECTOR, PUBLIC SERVICES*

SUPPORT AGENCIES: *CITY ATTORNEY*

City Commission

City Manager's Office

Finance

Human Resources (Personnel)

Human Resources (Risk Management)

Information Technologies

Leisure Services (Parking)

Leisure Services (Pier)

Public Services (Facilities Management)

Public Services (Garage)

Public Services (Stormwater / Streets)

Public Services (Streets Maintenance)

Public Information

LIAISONS: ***P****ALM BEACH COUNTY*

Palm Beach County School District

AUTHORITIES AND REFERENCES

AUTHORITIES

See Basic Plan, Authorities and References.

REFERENCES

- National Response Framework ESF #1 – Transportation
- State of Florida Comprehensive Emergency Management Plan – ESF-1, Transportation

  Palm Beach County Comprehensive Emergency Management Plan, Transportation Unit

EXPLANATION OF TERMS

See Basic Plan, Attachment-4, Explanation of Terms.

INTRODUCTION

PURPOSE

The purpose of Emergency Support Function-1 *Transportation* (ESF-1) of the City of Lake Worth Emergency Operations Plan (EOP) is to provide for mobilization, direction, control, and demobilization of transportation and infrastructure resources available to the City to be utilized in support of City and County ESF (or equivalent) operations. ESF-1 also provides for coordination and liaison with the County, State, and Federal ESFs for the allocation and mobilization of transportation resources available for emergency response.

SCOPE

ESF-1 *Transportation* embodies considerable intermodal expertise and public and private sector transportation stakeholder relationships. ESF-1, with the assistance of the ESF-1 support agencies, provides transportation assistance in domestic incident management, including the following activities:

- Monitor and report status of and damage to the transportation system and infrastructure as a result of the incident.
- Identify temporary alternative transportation solutions that can be implemented by others when systems or infrastructure are damaged, unavailable, or overwhelmed.
- Perform any necessary coordination of resources in relation to aviation, maritime, surface, railroad, and pipeline transportation with internal and external agencies.
- Mobilize, deploy, maintain, and track transportation resources available to the City for use during emergency operations.
- Coordinate the restoration and recovery of the transportation systems and infrastructure.
- Coordinate and support preparedness, response, recovery, and mitigation activities among transportation stakeholders within the authorities and resource limitations of ESF-1 agencies.
- Mobilize, deploy, and maintain transportation resources available to the City for use during emergency operations.
- Perform necessary actions to assist with emergency evacuation and re-entry.

  Coordinate with ESF-6 *Shelter, Mass Care and Human Services*, ESF-11 *Food, Water, and Ice*, and ESF-17 *Animal Issues* as necessary.

NOTE: ESF-1 is not responsible for the mission assignments concerning the movement of goods, equipment, animals, or people; only the coordination and movement of resources to facilitate aforementioned missions.

ASSUMPTIONS

- All transportation resources owned and / or under the control of the City will be immediately available for emergency response operations and the initial stages of disaster recovery.
- The primary and support agencies will have the current operational procedures, personnel rosters, vehicle inventories, transportation equipment lists, etc., necessary to implement ESF-1.
- Damage to the transportation infrastructure of the City could be extensive and severe, and many transportation modes, routes, and resources could be unavailable to the City.
- The demands of emergency response operations on transportation resources, particularly at Emergency Operations Center (EOC) Activation Levels I and II, will be very heavy due to the need to move personnel, equipment, and supplies to and throughout the impacted areas.
- Most of or all available City transportation resources may be damaged, destroyed, or otherwise committed to emergency operations requiring additional transportation assistance from outside sources, including Palm Beach County, private sources, adjacent municipalities, and the State.
- Coordination with the County, the State / Disaster District Committee (DDC), or other stakeholders through mutual aid and / or stand-by agreements will be required to successfully locate, deploy, and coordinate use of resources to meet transportation needs.
- Access to and through impacted areas of the City may be severely restricted or blocked, necessitating use of alternate transportation routes and methods (e.g., helicopter, boat, motorcycles, “all terrain vehicle,” etc.).
- Motor fuels could be in short supply after a disaster, even for emergency response operations, and ESF-1 may need assistance from other City, County, and State ESFs, as well as from private sources to locate and maintain fuel supplies for transportation resources.

SITUATION

- For Emergency Operations Center (EOC) Activation Level III (Monitoring) each department would be generally expected to meet its own transportation resource needs.
- EOC Activation Level II (Limited Disaster Operations) situations may require the availability of transportation resources beyond the capabilities of individual City departments to mobilize and deploy, necessitating activation of ESF-1.
- Major or Catastrophic Events (EOC Activation Level I) may threaten, block, and / or extensively damage the transportation infrastructure of the City and surrounding areas, including roadways, railroads, navigable waterways, and airports.
- Local transportation systems may become slowed, delayed, or blocked by insufficient transportation resources, lack of utilities, heavy traffic, damages to the City's infrastructure, and disrupted communications.
- Prior to the onset and impact of an emergency situation, evacuation from the threatened area may be ordered, including the City as a whole. This will require that transportation resources and services be available through ESF-1 and that their use be prioritized.
- Transportation resources will need to be made available to facilitate movement of people out of the evacuated areas and along designated evacuation routes.
- Substantial emergency response resources will need to be transported within the City and adjacent areas, often over damaged or potentially blocked roadways.

- Following a disaster, damage to County, public and private transportation resources may be extensive, necessitating great demand on the City to provide transportation resources to County, State, Federal, and/or private sources.

CONCEPT OF OPERATIONS

GENERAL

- This ESF will be placed on standby or activated upon notification by the City Manager, or other designated person in charge of the EOC Activation process. Activation of the primary and support agencies will be in accordance with the Basic Plan, Concept of Operations, Direction and Control.
- If instructed to activate ESF-1, the primary agency will implement its operating procedures to notify and mobilize all of its personnel, facilities, and physical resources likely to be needed, based on the emergency circumstances, and to instruct the support agencies to remain on standby or to activate in coordination with the primary agency.
- Upon instructions to activate, the primary agency will have its designated ESF Coordinator or alternate report to the City of Lake Worth EOC for coordination and implementation of transportation related requests for assistance. The agency's ESF Coordinator will staff an ESF-1 work station within the EOC or at another facility if so instructed. Individuals representing primary and support agencies staffing ESF-1 will have extensive knowledge of the resources and capabilities of their respective agencies and have access to the appropriate authority for committing agency resources needed for emergency response.
- The primary agency will notify the City Manager immediately when full activation of the ESF-1 has occurred and it is prepared to accept mission assignments.
- The primary agency for ESF-1 will ensure that it remains in direct communication and coordination with the City Manager and with Palm Beach County ESF-1 (or equivalent), if activated, for more effective response to all requests for transportation assistance. Continuing communication and information exchange with ESF-5 *Information and Planning* will also be necessary.
- Prior to and during an evacuation, ESF-1 will focus its attention and resources on rapidly providing transportation resources needed to complete the evacuation process. Following evacuation, it is anticipated that the majority of the requests for transportation resources will come from other City ESF's. City transportation resources will only be committed to other purposes when authorized evacuations and / or movement of life safety and other emergency resources to the impact area have been completed.
- In coordinating the use of transportation resources, credentialed drivers must be included in the arrangements.
- When deemed necessary a support department may be called to provide 24 hour representation to the ESF-1 workstation in the City of Lake Worth EOC by the ESF-1 Coordinator. Any requested department is responsible for ensuring that sufficient program staff is available to report to and support ESF-1 and to effectively carry out the activities tasked to the ESF throughout the emergency response period.
- All resource requests will be documented and facilitated with the City of Lake Worth Resource Request Form (or NIMS Compliant Equivalent) and tracked accordingly

ORGANIZATION

- The ESF-1 Coordinator will be chosen from one of the primary agencies previously noted and determined by the City Manager based on the incident causing the EOC activation.
- The City's ESF-1, will organize under the direction of the primary agency. Personnel assigned to the City of Lake Worth EOC from the primary agency will provide continuing direction for all assigned missions.
- The primary agency, in coordination with the support agencies, shall develop an organizational structure and procedures for directing, planning, implementing, and monitoring the mission assignments from the City Manager or for requests from ESF-1 (or equivalent) authorities at the County, State, or Federal level, according to the ESF concept.
- Depending on the scale of an emergency situation, its duration, and the number of missions being executed by ESF-1, additional staff from organizations and agencies other than the primary and support agencies may be assigned to this ESF by the City Manager. Nevertheless, the primary agency and any other delegated department will maintain their roles as primary and support agencies, and will constitute the authorities for coordinating the allocation and mobilization of transportation resources following a major disaster or catastrophe.

LINE OF SUCCESSION

The line of succession for the ESF Coordinator and Transportation Engineering Manager is delineated in existing standard operating procedures.

DIRECTION AND CONTROL

- The Mayor and City Manager will establish priorities for and provide policy guidance for transportation activities.
- The City Manager will provide general direction to the Transportation Engineering Manager regarding transportation operations.
- The ESF-1 Coordinator and staff will plan, coordinate, and carry out transportation activities.

EOC ACTIVATION LEVELS

See Basic Plan, Concept of Operations, Emergency Operations Center Activation Levels.

RESPONSIBILITIES

COORDINATION

This ESF will coordinate with the Palm Beach County ESF-1 (or equivalent) representation at the Emergency Operations Center, if activated, when requesting emergency support or disaster assistance regarding transportation needs. In the cases where a conflict of priorities develops, this ESF will work directly with the City Manager to resolve the situation.

ESF COORDINATOR

The ESF Coordinator (chosen by the EMC based on the incident) will:

- Identify available transportation resources (see ESF-7 *Resource Management*) and maintain a transportation resource contact list.
- Coordinate with local public transportation authorities and commercial transportation providers to establish procedures for providing transportation resources during emergency situations.
- Coordinate with other emergency services to identify and prioritize requirements for transportation of supplies, equipment, materials, and personnel necessary for response and recovery operations.
- Work with Palm Beach County Emergency Management to coordinate resources to support public transportation for mass evacuations.
- When City resources are available, coordinate with Palm Beach County ESF-16 *Law Enforcement* on evacuation routes and the location of transportation pickup points and staging areas.
- Coordinate with the ESF-6 *Shelter, Mass Care, and Human Services* - Shelter Officer for transportation resources to support for ESF-6 operations.

PRIMARY AGENCY – ACTIONS BY PHASES OF EMERGENCY MANAGEMENT

A. Pre-incident (Mitigation / Preparedness)

- Identify and maintain a current list of public and private transportation resources.
- Identify possible transportation needs based on probable hazards and scenarios identified in the Basic Plan, Situation, Hazard Analysis.
- Develop preservation and protection procedures for transportation resources in scenarios or hazards that are advance warning incidents.
- Train and educate any personnel that may be activated to serve in ESF-1.

B. Incident (Emergency Protective Measures)

- Log into WebEOC and use as appropriate for incident reporting and tracking.
- Activate ESF-1 at the Lake Worth EOC or elsewhere as instructed.
- Preposition response resources when it is apparent that City transportation resources will be required.
- Notify the EOC Coordinator and the County ESF-1 representative of activation.
- Develop and prioritize strategies for initial response actions for mobilizing transportation resources.
- Establish communications with appropriate agency field personnel for coordination of response efforts.
- Preposition response resources when it is apparent that City transportation resources will be required.
- Support ESF-14 *Public Information* with information regarding evacuation transportation resources available for people without vehicles.
- Request information from Palm Beach County ESF-8 Health and Medical regarding likely transportation resources necessary from the City to evacuate special needs individuals and / or facilities.
- Track all costs associated with providing Emergency Protective Measures (includes labor, equipment usage, rentals, materials, etc.).
- Continue execution of new and ongoing mission assignments to provide transportation resources. Continue coordination of the transportation of resources such as personnel, goods, and services in response to requests for assistance from the City Manager and / or other ESFs.
- Participate in EOC briefings and / or prepare status reports regarding completion of mission assignments to ESF-1. Provide status and needs reports to ESF-5 *Information and Planning*. Provide information related to public mobility (e.g., operable/inoperable transportation modes and open / closed roadways, etc.) to ESF-14 *Public Information and External Affairs* through ESF-5 *Emergency Management* on a routine basis.
- Track committed transportation resources for possible redeployment and other purposes, and provide such information to ESF-5 *Emergency Management.*

C. Incident (Response and Recovery)

- Utilize disaster impact assessment information, if available, for identifying probable transportation resource needs and planning effective response actions.
- Seek field information from other ESFs regarding damage to and / or availability of transportation modes and routes.
- Reassess priorities and strategies according to the most critical of transportation needs and in light of available impact assessment information.
- Provide a designated representative from the primary agency to provide any requested observations for "after action" report.

D. Post Incident (Recovery)

- Develop and prioritize strategies, in coordination with ESF-11 *Food, Water, and Ice,* ESF-15, *Volunteers and Donations* for providing transportation support to ongoing response and recovery operations.
- Assist Palm Beach County ESF-16 *Law Enforcement* with information and support regarding long-term closure / reopening of transportation routes and modes.
- Assist ESF-7 *Resource Management* in obtaining, interpreting, and further documenting expenses incurred under ESF-1 direction or supervision.
- Prepare information for ESF-5 *Information and Planning* based on ESF-1 experience with the emergency response regarding hazard mitigation actions or developments necessary for the City's transportation infrastructure and management options that would enhance its physical integrity and operational capabilities in another disaster of similar type and scope.
- Designate a representative of the primary agency familiar with actions taken under ESF-1 to remain available to ESF-5 *Information and Planning* other City officials to discuss operations and expenditures made under ESF-1.
- Upon instruction of the City Manager, deactivate ESF-1 and notify the Palm Beach County ESF-1 (or equivalent), if still active, of the deactivation. Gather all logs, reports, and other documentation regarding operations and expenditures, and provide them to the City Manager or ESF-5 *Information and Planning*, as directed.

ADMINISTRATION AND SUPPORT

MUTUAL AID AGREEMENTS / MEMORANDA OF UNDERSTANDING

See Basic Plan, Responsibilities, Mutual Aid Agreements / Memoranda of Understanding.

PLAN DEVELOPMENT AND MAINTENANCE

- The ESF-1 Coordinator has primary responsibility for developing and maintaining all ESF-1 Transportation procedures, Standard Operating Procedures (SOPs), and related documents. Recommended changes to the ESF-1 plan should be forwarded as soon as needs become apparent.
- This ESF will be reviewed annually and updated in accordance with the schedule outlined in the Basic Plan, Responsibilities, Plan Development and Maintenance.
- Primary departments and agencies assigned responsibilities in this ESF are responsible for ensuring that their SOPs cover those duties and responsibilities.

RECORDS

The ESF-1 Coordinator has the responsibility to track and maintain all ESF-1 records and actions electronically and / or physically depending on the nature or type of documentation provided. All records shall be consolidated and organized by the primary agency. Upon demobilization of the ESF, the ESF-1 Coordinator will turn in all records to ESF-5 *Information and Planning.*

FINANCE

See Basic Plan, Administration and Support, Financial Management.

TRANING, EXERCISES, AND EVALUATIONS

See Basic Plan, Training, Exercises, and Evaluations.

ATTACHMENTS

- Attachment 1 – Individual Vehicle / Equipment Record & Use Log

  Attachment 2 – Multiple Vehicle / Equipment Record & Use Log

City of Lake Worth

ESF-1 Transportation (Public Works - Director of Public Services)

Checklist

ESF-1 (Transportation) Task Assignments				
Primary Agencies		**Completed (Yes/No/Ongoing)**	**Date and Time Completed**	**Notes**
Preparedness (Planning Phase)	❒ Identify and maintain a current list of public and private transportation resources.	❒ Yes ❒ No ❒ Ongoing	Date:_____ Time:_____ Initials:_____	
	❒ Identify possible transportation needs based on probable hazards and scenarios identified in the Hazard Vulnerability Assessment.	❒ Yes ❒ No ❒ Ongoing	Date:_____ Time:_____ Initials:_____	
	❒ Develop preservation and protection procedures for transportation resources in scenarios or hazards that are advance warning incidents.	❒ Yes ❒ No ❒ Ongoing	Date:_____ Time:_____ Initials:_____	
	❒ Train and educate any personnel that may be activated to serve in ESF-1.	❒ Yes ❒ No ❒ Ongoing	Date:_____ Time:_____ Initials:_____	
Emergency Protective Measures	❒ Log into WebEOC and use as appropriate for incident reporting and tracking	❒ Yes ❒ No ❒ Ongoing	Date:_____ Time:_____ Initials:_____	
	❒ Activate ESF-1 at the Lake Worth EOC or elsewhere as instructed.	❒ Yes ❒ No ❒ Ongoing	Date:_____ Time:_____ Initials:_____	

❒ Preposition **response resources** when it is apparent that City transportation resources will be required.	❒ Yes ❒ No ❒ Ongoing	Date:_____ Time:_____ Initials:_____	
❒ Notify the City of Lake Worth EOC and the County ESF-1 representative of activation.	❒ Yes ❒ No ❒ Ongoing	Date:_____ Time:_____ Initials:_____	
❒ Develop and prioritize strategies for initial response actions for mobilizing transportation resources.	❒ Yes ❒ No ❒ Ongoing	Date:_____ Time:_____ Initials:_____	
❒ Verify inventories of available vehicles, personnel, transportation-related equipment, and fuel, and provide a summary listing to ESF-7 *Resource Management*	❒ Yes ❒ No ❒ Ongoing	Date:_____ Time:_____ Initials:_____	
❒ Establish communications with essential agency field personnel for coordination of response efforts.	❒ Yes ❒ No ❒ Ongoing	Date:_____ Time:_____ Initials:_____	
❒ Support ESF-14 *Public Information* with information regarding evacuation transportation resources for people without vehicles.	❒ Yes ❒ No ❒ Ongoing	Date:_____ Time:_____ Initials:_____	
❒ Request information from Palm Beach County ESF-8 *Health and Medical* regarding likely transportation resources necessary from the City to evacuate special needs individuals and / or facilities.	❒ Yes ❒ No ❒ Ongoing	Date:_____ Time:_____ Initials:_____	
❒ Continue execution of new and ongoing mission assignments to provide transportation resources. Continue coordination of the transportation of personnel, goods, and services in response to requests for assistance from the EOC Management Coordinator and / or other ESFs. **(ONGOING)**	❒ Yes ❒ No ❒ Ongoing	Date:_____ Time:_____ Initials:_____	

❒ Participate in EOC briefings and / or prepare status reports regarding completion of mission assignments to ESF-1. Provide status and needs reports to ESF-5 – *Information and Planning.* Provide information related to public mobility, (e.g., operable / inoperable transportation modes and open / closed roadways, etc.), to ESF-14 *Public Information.* **(ONGOING)**	❒ Yes ❒ No ❒ Ongoing	Date:_____ Time:_____ Initials:_____	

• Track committed transportation resources for possible redeployment and other purposes, and provide such information to ESF-5 *Information and Planning* and ESF-7 *Resource Support*. (**ONGOING)**	• Yes • No • Ongoing	Date:_____ Time:_____ Initials:_____	
• Utilize disaster impact assessment information, if available, for identifying probable transportation resource needs and planning effective response actions.	• Yes • No • Ongoing	Date:_____ Time:_____ Initials:_____	
• Seek field information from other ESFs regarding damage to and / or availability of transportation modes and routes.	• Yes • No • Ongoing	Date:_____ Time:_____ Initials:_____	
• Reassess priorities and strategies according to the most critical of transportation needs and in light of available impact assessment information.	• Yes • No • Ongoing	Date:_____ Time:_____ Initials:_____	
• Provide a designated representative from the primary agency to provide any requested observations for "after action" reports.	• Yes • No • Ongoing	Date:_____ Time:_____ Initials:_____	
• Develop and prioritize strategies, in coordination with ESF-11 *Food and Water,* ESF-15, *Volunteers and Donations*, for providing transportation support to ongoing response and recovery operations.	• Yes • No • Ongoing	Date:_____ Time:_____ Initials:_____	
• Assist Palm Beach County ESF-16 *Law Enforcement* with information and support regarding long-term closure/reopening of transportation routes and modes.	• Yes • No • Ongoing	Date:_____ Time:_____ Initials:_____	
• Prepare information for ESF-5 *Information and Planning* based on ESF-1's experience with the emergency response relating to hazard mitigation actions, or actions that could be undertaken to enhance the resistance of transportation infrastructure to future disasters.	• Yes • No • Ongoing	Date:_____ Time:_____ Initials:_____	
• Assist ESF-7 *Resource Management* in obtaining, interpreting, and further documenting expenses incurred under ESF-1 direction or supervision.	• Yes • No • Ongoing	Date:_____ Time:_____ Initials:_____	

• Designate a representative of the primary agency familiar with actions taken under ESF-1 to remain available to ESF-5 *Information and planning* other City officials to discuss operations and expenditures made under ESF-1.	• Yes • No • Ongoing	Date:_____ Time:_____ Initials:_____	
• Upon instruction of the EOC Management Group, deactivate ESF-1 and notify the Palm Beach County ESF-1, if still active, of the deactivation. Gather all logs, reports, and other documentation regarding operations and expenditures, and provide them to the EOC Management Group or ESF-5 *Information and Planning* as directed.	• Yes • No • Ongoing	Date:_____ Time:_____ Initials:_____	

Individual Vehicle / Equipment Record & Use Log

Request / Mission Tracking #:	
Vehicle Model / Equipment Type:	
Vehicle Identification Number or License #:	
Beginning Odometer/ hour meter reading:	
Date Received:	**Time Received:**
Check All That Apply: City/County Asset School District Asset Other: _____ Leased/Rented Borrowed/Loaned	
Owner Contact Information: Name: Address: Phone #: Other Information:	
Operational Status: Good Fair Poor	
Operator Provided: Yes No	
Maintenance performed (if any):	
Date Returned:	**Time Returned:**
Returned Odometer/ Hour Meter reading:	
Remarks:	

Multiple Vehicle / Equipment Record & Use Log

Request / Mission Tracking #	Vehicle / Equipment ID	Individual Vehicle / Equipment Record & Use Log (Yes / No)	Operator Name and License Number	Date

Emergency Support Function - 3
Public Works and Engineering

APPROVAL & IMPLEMENTATION

EMERGENCY SUPPORT FUNCTION-3 PUBLIC WORKS AND ENGINEERING

This Emergency Support Function is hereby approved. This Emergency Support Function is effective immediately and supersedes all previous editions.

Director, Public Services	Date 5/14/13
City Manager	Date 5/17/2013

Record of Changes			
Description of Change	Date of Change	Entered By	Date Entered

ESF COORDINATOR: *DIRECTOR, PUBLIC SERVICES*

SUPPORT AGENCIES: *CITY ATTORNEY*

City Commission

City Manager's Office

Community Sustainability (Code Compliance)

Finance

Human Resources (Personnel)

Human Resources (Risk Management)

Information Technologies

Leisure Services (Parking)

Leisure Services (Pier)

Utilities

LIAISONS: *PALM BEACH COUNTY EMERGENCY MANAGEMENT*

AUTHORITIES AND REFERENCES

AUTHORITIES

- See Basic Plan, Authorities and References

REFERENCES

- National Response Framework ESF#3 - Public Works and Engineering
- State of Florida Comprehensive Emergency Management Plan – ESF-3, Public Works and Engineering
- Palm Beach County Comprehensive Emergency Management Plan, Public Works Unit and Debris Management Unit
- FEMA 329 – Debris Estimation Field Guide
- FEMA 325 – Public Assistance: Debris Management Guide

EXPLANATION OF TERMS

See Basic Plan, Attachement-4, Explanation of Terms.

INTRODUCTION

PURPOSE

The purpose of Emergency Support Function - 3 *Public Works and Engineering* (ESF-3) of the City of Lake Worth Emergency Operations Plan (EOP) is to:

- Provide for the restoration of the City's public works systems, including emergency debris removal and repair of roadways and water and sewage systems;
- Provide general guidance for infrastructure and engineering services needed by other City ESFs for functions such as inspections of structures and systems, infrastructure restoration, and other public works and engineering services;
- Coordinate with County, State, and Federal ESFs or equivalent for restoration of other public services and facilities located within the city; and
- Provide and maintain temporary utility services for the City's emergency response facilities and other critical facilities within the City.

SCOPE

- Coordinate restoration and recovery activities of City of Lake Worth road, bridge, water, sewer, and storm water infrastructure...
- Work with ESF-7 *Resource Management* Coordinator to execute emergency contract support for life-saving and life-sustaining resources.
- Provide technical assistance and expertise, construction management, and contracting and real estate services.
- Provide emergency repair of damaged public infrastructure and critical facilities.
- Conduct impact and damage assessment of City of Lake Worth infrastructure.
- Coordinate and support prevention, mitigation, response, and recovery activities among ESF-3 stakeholders within the authorities and resource limitations of ESF-3 agencies.

ASSUMPTIONS

- Employing public works personnel and equipment during pre-disaster operations should minimize disaster damage. Advance preparation of personnel and equipment may allow for more efficient and effective restoration efforts.
- A full range of basic public services and engineering resources will be required from the City following a major disaster.
- All of the City's public services resources will be made available to support the City's emergency response and disaster recovery and the operations of this ESF, when needed.
- Local departments and agencies responsible for the public works and engineering function will not have sufficient resources to cope with a major disaster.
- Ground, rail, and other transportation routes will likely be impassable or severely obstructed, requiring actions to permit access the disaster area. As a result, priority will be given for removal of debris and other repairs to open access routes in support of public evacuation, immediate lifesaving, firefighting or law enforcement activities.
- A rapid impact assessment of the emergency situation on the City and its public services will be needed to determine the priority for actions under this ESF, and subsequent detailed damage assessments of the disaster areas will be necessary to determine potential actions, expertise, and level of effort needed.
- Emergency environmental and other legal waivers for the disposal of debris, construction materials, and other waste will need to be secured, and may require the assistance and cooperation of County and State agencies.
- Legal requirements which would delay procurement of contracted design and construction services, or the purchasing of construction materials, may need to be temporarily modified or limited.
- Large numbers of engineers, construction workers, building inspectors, equipment operators, and other skilled personnel, along with appropriate equipment and supplies, may be required from sources outside of the disaster area.
- Support services for feeding, clothing, sheltering, and equipping workers will need to be procured and coordinated through City, County, State, and Federal ESFs or equivalent as needed, and deployed into the impacted areas.
- The use of mutual aid, stand-by agreements, or alternate facility locations will be employed if the City's resources or facilities are unable to meet the needs following a disaster.
- Damage to chemical plants, power lines, sewer and water distribution systems, and secondary hazards, such as fires, may result in health and safety hazards. These hazards could pose a threat to public works and engineering personnel and impede operational capabilities. Special considerations must be made if any debris collected or being moved has been contaminated with chemicals or petroleum products.
- If local capabilities prove inadequate to deal with a major emergency or disaster, state and / or federal resources will be available to assist in debris removal and restoration of essential services.

SITUATION

- For Emergency Operation Center (EOC) Activation Level III (Monitoring) the need for public works and engineering services may not be anticipated. However, such needs for service could be managed within the range of normal operations of both the City's Public Services Department.
- During EOC Activation Level II (Limited Disaster Operations) situations; activation of this ESF may be required to support the public works and engineering needs of the City.

- Major or Catastrophic Events (EOC Activation Level I) may severely impact public works and engineering services. As a result, full activation of this ESF can be expected.
- Extensive property damage could occur following a major disaster or catastrophic event. Many private homes and businesses, as well as industries and commercial enterprises, may be damaged or destroyed.
- The structural integrity of many public buildings, bridges, roadways, and other facilities may be compromised. Much of the transportation and utility infrastructures may be severely impacted. Many facilities may need to be reinforced, demolished, or isolated to ensure public safety.
- Emergency response personnel could be hampered in their response efforts due to transportation impasses, loss of electrical power, and damaged, destroyed, or inaccessible structures and facilities.
- Water and wastewater facilities may be damaged or destroyed.
- City resources will need to be immediately deployed from unaffected areas of the City to ensure, to the extent possible, an effective and efficient response.

CONCEPT OF OPERATIONS

GENERAL

- This ESF will be placed on standby or activated upon notification by the City Manager, or other officer in charge of the notification process. Activation of the primary and support agencies will be in accordance with the Basic Plan, Concept of Operations, and Notification and Warning section.
- Upon activation, the Department of Public Services will make designated agency representatives available to report to the City of Lake Worth Emergency Operations Center for implementation and coordination of public works and engineering related requests for assistance through this ESF.
- The ESF Coordinator(s) will staff an ESF-3 work station in the City of Lake Worth EOC, will identify which support agencies for ESF-3 are to be activated, and will then take the necessary steps to assure that support agencies are activated or placed on standby, as required.
- The ESF Coordinator(s) will notify the City Manager immediately when full activation of the ESF has occurred and it is prepared to accept mission assignments.

- As the ESF Coordinator(s) for all activities under ESF-3, the Department of Public Services will ensure that it and all support agencies assigned to ESF-3 respond to requests for local public works and engineering assistance. It is anticipated that the majority of the requests for public works and engineering services will concern debris management, the repair and restoration of emergency access routes, potable water supplies, water and waste water treatment systems, as well as maintenance of adequate water pressure for firefighting.
- The ESF-3 Coordinator(s) will ensure that they remain in direct communication and coordination with the City Manager and with the Palm Beach County ESF-3 or equivalent, if activated, for more effective response to all requests for public works and engineering assistance. Continuing communication and information exchange with ESF-5 *Information and Planning* will also be necessary.
- The ESF-3 Coordinator(s) will be provided a mission assignment from the City Manager. Status of received mission assignments will be reported back to the City Manager and ESF-5 *Information and Planning* on a periodic basis.
- All support agencies will be notified of the need for activation for this ESF and requested to provide 24-hour staffing, as necessary. Each support agency is responsible for ensuring that sufficient staff is available to report to the City of Lake Worth EOC or elsewhere as instructed and to support the activities tasked to their organization by the lead agencies for this ESF on a continuous basis.

- When deemed necessary, a support department of agency may be called to provide 24 hour representation to the ESF-3 workstation in the Lake Worth EOC by the ESF-3 Coordinator or the City Manager. Any requested department is responsible for ensuring that sufficient program staff is available to report to and support ESF-3 and to effectively carry out the activities tasked to the ESF throughout the emergency response period.

ORGANIZATION

- The Department of Public Services will provide direction in all matters related to public works and engineering, debris management, emergency roadway repair, restoration, and construction, and in building construction and public services.
- The Director of Public Services will work with ESF-3 support agencies, in restoration and implementation of infrastructure resources.
- The Director of Public Services will work with ESF-3 support agencies in the implementation and execution of debris management plans and tasks.
- The ESF-3 Coordinator(s), in coordination with ESF-5 *Information and Planning*, shall develop procedures for directing, planning, implementing, and monitoring mission assignments according to the ESF concept.
- Depending on the scale of an emergency situation, its duration, and the number of missions being executed by ESF-3, additional staff from organizations and agencies other than the primary and support agencies may be assigned to this ESF by the City Manager. Nevertheless, the Department of Public Services, and the designated support agencies will maintain their roles, and will constitute the authorities for coordinating the allocation and mobilization of public works and engineering resources following a major disaster or catastrophe. **Figure : ESF-3 *Public Works & Engineering***

LINE OF SUCCESSION

The line of succession for the Department of Public Services, is delineated in existing standard operating procedures.

DIRECTION AND CONTROL

- The Mayor and/or the City Manager will establish priorities for and provide policy guidance for public works and engineering activities.
- The City will provide general direction to the ESF-3 Coordinators regarding public works and engineering operations.
- The ESF-3 Coordinator(s) and staff will plan, coordinate, and carry out public works and engineering activities.

EOC ACTIVATION LEVELS

See Basic Plan, Concept of Operations, Emergency Operation Center Activation Levels.

RESPONSIBILITIES

COORDINATION

This ESF will coordinate with the Palm Beach County ESF-3 (or equivalent) representation at the Emergency Operations Center if activated when requesting emergency support or disaster assistance regarding public works needs. In the cases where a conflict of priorities develops, this ESF will work directly with the City Manager to resolve the situation.

ESF COORDINATOR

The ESF-3 Coordinator (chosen by the City Manager (based on the incident) will:

- Prepare and maintain operating procedures, resource inventories, maps, personnel rosters and detailed resource mobilization information necessary for implementation of the responsibilities of the lead agency for ESF-3. Ensure lead agency personnel are trained in their responsibilities and duties.
- Receive notification of the need for ESF-3 activation and implement activation on a timely and effective basis. Conduct all actions, as needed, identified in this ESF and primary agency procedures and / or as directed by the City Manager.
- Deploy and utilize agency resources in coordination with ESF-3 support agencies. Direct and coordinate support agencies in prioritizing needs and in directing public works and engineering resources to include engineers, skilled personnel, construction workers, contractors, equipment, and materials for the following work elements:

    - Removal of debris and restoration of access;
    - Repair and restoration of water and waste water facilities and distribution systems;
    - Repair and restoration of critical public services and facilities;
    - Inspections, demolition and stabilization of damaged structures and facilities; and completion of damage assessments.
- Assist ESF-7 *Resource Management* in maintaining a current list of public works and engineering resources. [In an effort to facilitate assistance pursuant to mutual aid agreements.
- Coordinate with all other City ESFs to identify public works needs on a continuing basis.
- Support other City ESFs by providing public works and engineering resources in accordance with established priorities.
- Ensure that adequate cost accounting measures are being used by all lead and support agency personnel and that summary reports are generated as needed and shared with ESF-5 Information and Planning.

PRIMARY AGENCY – ACTIONS BY PHASES OF EMERGENCY MANAGEMENT

- **Pre-incident (Mitigation / Preparedness)**
    - Identify and maintain a current list of public and private Department of Public Works resources.
    - Identify possible Public Works needs based on probable hazards and scenarios identified in the Hazard Vulnerability Assessment.
    - Develop preservation and protection procedures for Public Works resources in scenarios or hazards that are advance warning incidents.
    - Train and educate any personnel that may be activated to serve in ESF-3.
- **Incident (Emergency Protective Measures(**
    - Log into WebEOC and use as appropriate for incident reporting and tracking.
    - Activate ESF-3 at the Lake Worth EOC or elsewhere as instructed.
    - Preposition **response resources** when it is apparent that City Public Works resources will be required.
    - Notify the City of Lake Worth EOC and the County ESF-3 representative of activation.
    - Develop and prioritize strategies for initial response actions for mobilizing Public Works resources.
    - Verify inventories of available vehicles, personnel, Public Works-related equipment, and fuel, and provide a summary listing to ESF-7 *Resource Management.*
    - Take necessary precautions to protect City buildings and assets (shuttering of windows, tarps, securing of loose items, bringing equipment to higher ground or to secure location, etc.)
    - Establish communications with essential agency field personnel for coordination of response efforts.
    - Review and confirm debris clearance priorities and availability of temporary debris staging and / or reduction areas.
    - Ensure vehicles and generators are fueled and that enough fuel will be available for post-storm / incident activities).

- Provide necessary heavy equipment in support of ESF-9 Search and Rescue (upon request of Palm Beach County EOC).
- Track all costs associated with providing Emergency Protective Measures (includes labor, equipment usage, rentals, materials, etc.)
- Continue execution of new and ongoing mission assignments to provide Public Works resources and services.
- Continue coordination of the Public Works personnel, goods, and services in response to requests for assistance from the EOC Management Coordinator and / or other ESFs.
- Participate in EOC briefings and / or prepare status reports regarding completion of mission assignments to ESF-3. Provide information related to Public Works, (e.g., open / closed roadways, bridges, etc.), to ESF-14 *Public Information.*
- Track committed Public Works resources for possible redeployment and other purposes, and provide such information to ESF-5 Information and Planning and ESF-7 Resource Management.
- **Incident (Response and Recovery)**
- Coordinate with damage assessment teams to assist in completing preliminary damage assessments, as needed, to identify unsafe City buildings and take actions to restrict access to roads and other infrastructure if needed
- Utilize disaster impact assessment information, if available, for identifying probable Public Works resource needs and planning effective response actions.
- Seek field information from other ESFs regarding damage to and / or availability of City roads and bridges.
- Reassess priorities and strategies according to the most critical of Public Works needs and in light of available impact assessment information.
- Provide a designated representative from the primary agency to provide any requested observations for "after action" reports.
- Install emergency generators in key facilities and have portable generators available to meet unexpected needs. Ensure procedures are in place to maintain and periodically test back-up sources of power, such as generators and fuel, in the event of an emergency power loss.
- Support community cleanup efforts, as necessary.
- Remove debris from public property and manage proper disposal of all debris and load ticket tracking.
- Make timely temporary repairs to government-owned buildings and other infrastructure that is essential for emergency response and recovery and take action to protect all government buildings and their contents from further damage until they can be repaired. To protect some equipment and records, it may be necessary to relocate them from damaged structures. Personnel should coordinate with building occupants to determine which areas and equipment have the highest priority for protection.
- Assist ESF-16 *Law Enforcement* with information and support regarding long-term closure/reopening of transportation routes and modes.
- Prepare information for ESF-5 Information and Planning based on ESF-3's experience with the emergency response relating to hazard mitigation actions, or actions that could be undertaken to enhance the resistance of Public Works infrastructure to future disasters.
- Designate a representative of the primary agency familiar with actions taken under ESF-3 to remain available to ESF-5 *Information and Planning* and other City officials to discuss operations and expenditures made under ESF-3.

- Upon instruction of the EOC Management Group, deactivate ESF-3 and notify the Palm Beach County ESF-3, if still active, of the deactivation. Gather all logs, reports, and other documentation regarding operations and expenditures, and provide them to the EOC Management Group or ESF-5 *Information and Planning* as directed.

ADMINISTRATION AND SUPPORT

MUTUAL AID AGREEMENTS / MEMORANDA OF UNDERSTANDING

See Basic Plan, Responsibilities, Mutual Aid Agreements / Memoranda of Understanding.

PLAN DEVELOPMENT AND MAINTENANCE

- The ESF-3 Coordinator(s) have primary responsibility for developing and maintaining all ESF-3 SOPs in accordance with all City of Lake Worth policies and NIMS standards.
- All recommended changes to the ESF-3 plan should be forwarded as soon as needs become apparent.
- This ESF will be reviewed annually, and updated in accordance with the schedule outlined in the Basic Plan, Responsibilities, Plan Development and Maintenance section.
- Primary and support agencies assigned responsibilities in this ESF are responsible for ensuring that their SOPs cover those duties and responsibilities.

RECORDS

The ESF-3 Coordinator(s) have the responsibility to track and maintain all ESF-3 records and actions electronically and / or physically depending on the nature or type of documentation provided. All records shall be consolidated and organized by the primary agency. Upon demobilization of the ESF, the ESF-3 Coordinator(s) will turn in all records to ESF-5 *Information and Planning.* .

EQUIPMENT AND FACILITIES

THE CITY OF LAKE WORTH DEPARTMENT OF PUBLIC SERVICES MAINTAINS A CURRENT LISTING OF KEY LOCAL FACILITIES HAVING GENERAL PRIORITY FOR PROTECTION, REPAIR, AND RESTORATION. THE LIST IS DYNAMIC AND THEREFORE IS NOT INCLUDED IN THIS ESF. THIS LIST IS AVAILABLE UPON REQUEST.

FINANCE

See Basic Plan, Administration and Support, Financial Management.

TRANING, EXERCISES, AND EVALUATIONS

See Basic Plan, Training, Exercises, and Evaluations.

ATTACHMENTS

- Attachment 1 – Primary Agency Task Assignments

City of Lake Worth

ESF-3 (Public Works and Engineering – Director, Public Services)

Checklist

ESF-3 (Public Works and Engineering) Task Assignments				
Primary Agencies		**Completed (Yes/No/Ongoing)**	**Date and Time Completed**	**Notes**
Preparedness (Planning Phase)	• Identify and maintain a current list of public and private Department of Public Works resources.	• Yes • No • Ongoing	Date:_____ Time:_____ Initials:_____	
	• Identify possible Public Works needs based on probable hazards and scenarios identified in the Hazard Vulnerability Assessment.	• Yes • No • Ongoing	Date:_____ Time:_____ Initials:_____	
	• Develop preservation and protection procedures for Public Works resources in scenarios or hazards that are advance warning incidents.	• Yes • No • Ongoing	Date:_____ Time:_____ Initials:_____	
	• Train and educate any personnel that may be activated to serve in ESF-3.	• Yes • No • Ongoing	Date:_____ Time:_____ Initials:_____	
Emergency Protective Measures	• Log into WebEOC and use as appropriate for incident reporting and tracking.	• Yes • No • Ongoing	Date:_____ Time:_____ Initials:_____	
	• Activate ESF-3 at the Lake Worth EOC or elsewhere as instructed.	• Yes • No • Ongoing	Date:_____ Time:_____ Initials:_____	
Emergency Protective Measures (continued)	• Preposition **response resources** when it is apparent that City Public Works resources will be required.	• Yes • No • Ongoing	Date:_____ Time:_____ Initials:_____	
	• Notify the City of Lake Worth EOC and the County ESF-3 representative of activation.	• Yes • No • Ongoing	Date:_____ Time:_____ Initials:_____	
	• Develop and prioritize strategies for initial response actions for mobilizing Public Works resources.	• Yes • No • Ongoing	Date:_____ Time:_____ Initials:_____	

	• Verify inventories of available vehicles, personnel, Public Works-related equipment, and fuel, and provide a summary listing to ESF-7 *Resource Management*	• Yes • No • Ongoing	Date:_____ Time:_____ Initials:_____	
	• Take necessary precautions to protect City buildings and assets (shuttering of windows, tarps, securing of loose items, bringing equipment to higher ground or to secure location, etc.)	• Yes • No • Ongoing	Date:_____ Time:_____ Initials:_____	
	• Establish communications with essential agency field personnel for coordination of response efforts.	• Yes • No • Ongoing	Date:_____ Time:_____ Initials:_____	
Emergency Protective Measures (continued)	• Review and confirm debris clearance priorities and availability of temporary debris staging and / or reduction areas.	• Yes • No • Ongoing	Date:_____ Time:_____ Initials:_____	
	• Ensure vehicles and generators are fueled and that enough fuel will be available for post-storm / incident activities).	• Yes • No • Ongoing	Date:_____ Time:_____ Initials:_____	
	• Provide necessary heavy equipment in support of ESF-9 Search and Rescue (upon request of Palm Beach County EOC).	• Yes • No • Ongoing	Date:_____ Time:_____ Initials:_____	
	• Track all costs associated with providing Emergency Protective Measures (includes labor, equipment usage, rentals, materials, etc.) **(ONGOING)**	• Yes • No • Ongoing	Date:_____ Time:_____ Initials:_____	
	• Continue execution of new and ongoing mission assignments to provide Public Works resources and services (**ONGOING)**.	• Yes • No • Ongoing	Date:_____ Time:_____ Initials:_____	

Emergency Protective Measures (continued)	• Continue coordination of the Public Works personnel, goods, and services in response to requests for assistance from the EOC Management Coordinator and / or other ESFs. **(ONGOING)**	• Yes • No • Ongoing	Date:_____ Time:_____ Initials:_____	
	• Participate in EOC briefings and / or prepare status reports regarding completion of mission assignments to ESF-3. Provide information related to Public Works, (e.g., open / closed roadways, bridges, etc.), to ESF-14 *Public Information.* **(ONGOING)**	• Yes • No • Ongoing	Date:_____ Time:_____ Initials:_____	
	• Track committed Public Works resources for possible redeployment and other purposes, and provide such information to ESF-5 *Information and Planning* and ESF-7 *Resource Management*. (**ONGOING)**	• Yes • No • Ongoing	Date:_____ Time:_____ Initials:_____	
Response and Recovery (Post-Incident)	• Coordinate with damage assessment teams to assist in completing preliminary damage assessments, as needed, to identify unsafe City buildings and take actions to restrict access to roads and other infrastructure if needed.	• Yes • No • Ongoing	Date:_____ Time:_____ Initials:_____	
	• Utilize disaster impact assessment information, if available, for identifying probable Public Works resource needs and planning effective response actions.	• Yes • No • Ongoing	Date:_____ Time:_____ Initials:_____	

	• Seek field information from other ESFs regarding damage to and / or availability of City roads and bridges.	• Yes • No • Ongoing	Date:_____ Time:_____ Initials:_____	
	• Reassess priorities and strategies according to the most critical of Public Works needs and in light of available impact assessment information.	• Yes • No • Ongoing	Date:_____ Time:_____ Initials:_____	
Response and Recovery (Post-Incident) continued	• Provide a designated representative from the primary agency to provide any requested observations for "after action" reports.	• Yes • No • Ongoing	Date:_____ Time:_____ Initials:_____	
	• Install emergency generators in key facilities and have portable generators available to meet unexpected needs. Ensure procedures are in place to maintain and periodically test back-up sources of power, such as generators and fuel, in the event of an emergency power loss.	• Yes • No • Ongoing	Date:_____ Time:_____ Initials:_____	
	• Support community cleanup efforts, as necessary.	• Yes • No • Ongoing	Date:_____ Time:_____ Initials:_____	
	• Remove debris from public property and manage proper disposal of all debris and load ticket tracking.	• Yes • No • Ongoing	Date:_____ Time:_____ Initials:_____	

Response and Recovery (Post-Incident) continued	• Make timely temporary repairs to government-owned buildings and other infrastructure that is essential for emergency response and recovery and take action to protect all government buildings and their contents from further damage until they can be repaired. To protect some equipment and records, it may be necessary to relocate them from damaged structures. Personnel should coordinate with building occupants to determine which areas and equipment have the highest priority for protection.	• Yes • No • Ongoing	Date:_____ Time:_____ Initials:_____	
	• Assist ESF-16 *Law Enforcement* with information and support regarding long-term closure/reopening of transportation routes and modes.	• Yes • No • Ongoing	Date:_____ Time:_____ Initials:_____	

Response and Recovery (Post-Incident) continued	• Prepare information for ESF-5 *Information and Planning* based on ESF-3's experience with the emergency response relating to hazard mitigation actions, or actions that could be undertaken to enhance the resistance of Public Works infrastructure to future disasters.	• Yes • No • Ongoing	Date:_____ Time:_____ Initials:_____	
	• Designate a representative of the primary agency familiar with actions taken under ESF-3 to remain available to ESF-5 *Information and Planning* and other City officials to discuss operations and expenditures made under ESF-3.	• Yes • No • Ongoing	Date:_____ Time:_____ Initials:_____	

Response and Recovery (Post-Incident) continued	• Upon instruction of the EOC Management Group, deactivate ESF-3 and notify the Palm Beach County ESF-3, if still active, of the deactivation. Gather all logs, reports, and other documentation regarding operations and expenditures, and provide them to the EOC Management Group or ESF-5 *Information and Planning* as directed.	• Yes • No • Ongoing	Date:_____ Time:_____ Initials:_____	